Y-12 CENTRAL FILES
RECORD COPY

Cy. 1

AN INSTANTANEOUS, DIRECT-READING BERYLLIUM AIR MONITOR

J. H. Rowan and W. W. Lee

Several instruments have been described for the rapid monitoring of the air for beryllium contamination. Churchill and Gillieson[1] reported the development of an instantaneous monitor which utilized a high intensity spark discharge to excite beryllium in an air sample as it was drawn between two copper electrodes. A second model, operating along similar lines but somewhat more elaborate, was reported by Webb, et al.[2] The work of Churchill and Gillieson, however, was used as a basis for the work reported here and the instrument to be described is, in general, similar to their unit.

The spark chamber (Slide 1), fabricated of micarta, contains 3/8-inch copper tubing electrodes supported on ceramic insulators. The air sample is drawn in from the left, through a Teflon coupling and the left electrode. Little difference in the response was obtained when the right electrode was replace with a solid copper rod. The air sample exits, from the chamber through the large hole at the right. Another smaller hole, located in one side wall permits optical sampling of the spark emission. Use of an open optical port was found necessary to overcome spattering from the action of the spark on the copper electrodes. A quartz window placed in various manners to close this port, severely limited the unattended operating time of the instrument, and in essence served only to reduce the required sampling pump capacity. (It must be assumed that the air coming through this port is no more severely contaminated with beryllium than the test air passing through the electrode system.)

The spark power supply (Slide 2) is of conventional design, being a laboratory spark source modified by adding heavy duty capacitors for reliability under continuous duty. The input voltage was made variable to determine the operating point for best S/N ratio. An auxiliary spark gap, quenched by filtered air, was added to reduce the effects of atmospheric water vapor and particulates on spark characteristics. Supply voltage and gap spacings were adjusted to give 1-2 breakdowns per half cycle.

Light from the spark discharge passes through a condenser lens which focuses at the spectrograph's entrance slit. The spectrograph is a 1/2 meter Ebert mounted grating monochromator. The monochromator is enclosed in a constant

temperature box to permit operation of the instrument over wide ambient temperature excursions. The exit slit is positioned for maximum response at the 3131 Angstrom beryllium doublet.

(Slide 4) The beryllium emission is detected by a photomultiplier whose output is coupled, through a RC network having a time constant of about 20 seconds, to an electrometer. The electrometer, in turn, drives a strip-chart recorder which has been calibrated to read micrograms beryllium per cubic meter of air when observed visually.

CALIBRATION

The scheme selected for calibrating the instrument involved aspirating a standard beryllium nitrate solution through a flame-photometer burner and allowing the exhaust gases to pass through the sampling port. From the solution concentration and flow rate through the aspirator, the amount of beryllium present in the exhaust gases was calculated.

The air sampling rate was determined by the use of a flow meter and confirmed using a high capacity wet-test meter. The sampling rate for normal operation was 0.088 m^3/min.

The effects of spark voltage were studied (Slide 5). While it might seem more desirable to operate at a low spark voltage considering the average signal to noise ratio, intermittant spark discharge was encountered which resulted in a severe increase in the "hash" or instantaneous noise level. Best over-all performance was obtained when the primary voltage to the spark power supply was 45 volts.

A typical recorder tracing of the response to three levels of beryllium is reproduced in Slide 6. While the "hash" or short term excursions of the recorder could be reduced by introducing additional damping, the over-all response time would be correspondingly extended. At the fluctuation levels observed here, it is estimated that somewhat less than 1/2 the 2 μg Be/m^3 air

maximum allowable concentration can be detected with certainty. Note that as the concentration of beryllium decreases the "hash" decreases also, hence the true detection limit would be less than the noise level at the 3.7 μg Be/m³ level shown here.

The final calibration curve is reproduced in Slide 7. The 95% confidence limits shown are about ± 1.3 micrograms. No allowance was made in the calculations for the reduced "hash" level at the lower beryllium concentrations, which accounts for the estimated detection limit being less than the observed confidence limit.

Since the above method of calibration would be impractical in the field, a test electrode made from a copper rod containing a small amount of beryllium was prepared. In addition to serving as a secondary standard, this electrode can be used to check the alignment of the spectrograph.

Operational tests revealed that the copper tubing electrodes could be used continuously for a 24-hour period before the electrode gap required adjustment. After several days operation the electrode wear becomes sufficiently uneven to require replacement. Both ends of an electrode can be used before discarding. The electrodes were cut to length from copper tubing and the ends machine finished on a lathe before use. The tungsten electrodes in the auxiliary gap require much less frequent attention.

While as other workers have indicated, this method of detection to be dependent on the size of the beryllium particle, we believe that useful information can be obtained from this instrument particularily where its instantaneous response feature and ability to operate continuously can be utilized.

SUMMARY

The development of a direct reading instantaneous beryllium air monitor has been presented. This instrument draws a sample of air through a high intensity spark discharge and the intensity of the 3131.6 Angstrom beryllium emission is observed as a measure of the contamination level of the air.

Based on the response observed during calibration studies, one microgram of beryllium per cubic meter of air or less can be detected with reasonable certainty. The instrument was calibrated up to 25 μg Be/m^3 and the 95% confidence limit for a single measurement over this range was approximately ± 1.3 micrograms.

ACKNOWLEDGEMENT

The authors wish to recognize the contributions of John A. Morris of Oak Ridge National Laboratory who layed much of the ground work for the project and served as a valuable consultant.

REFERENCES

(1) Churchill, W. L., and Gillieson, A.H.C.P., "A Direct Reading Spectrographic Method for the Monitoring of Air for Minute Amounts of Beryllium", Spectrochemica Acta 5 238 (1952).

(2) Webb, M.S.W., Webb, R. J., and Wildy, P. C., "A Monitor for the Quantitative Determination of Beryllium in the Atmosphere", AERE-R-3318, May, 1960.

SLIDE 1

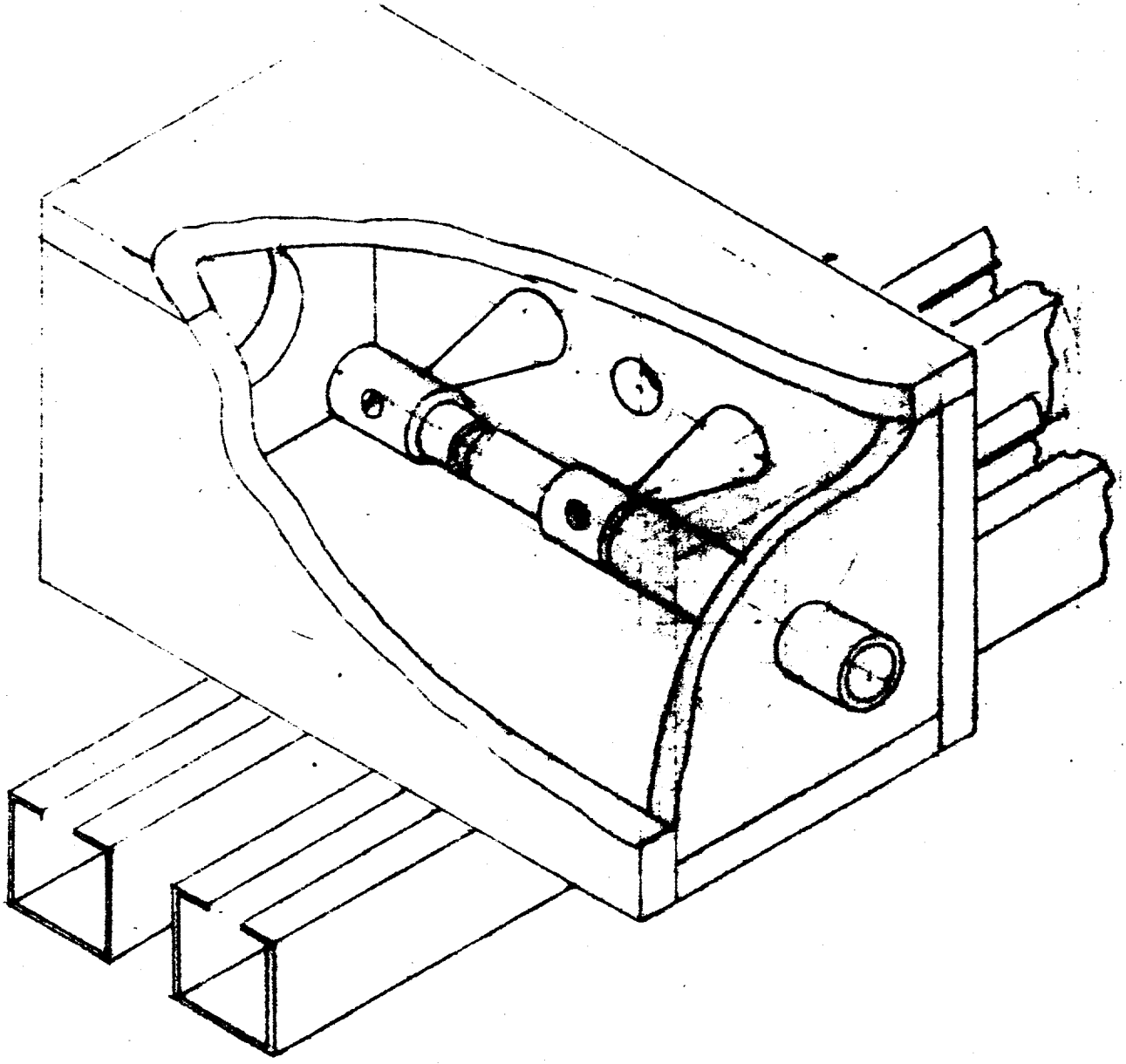

BERYLLIUM AIR MONITOR
SPARK CHAMBER

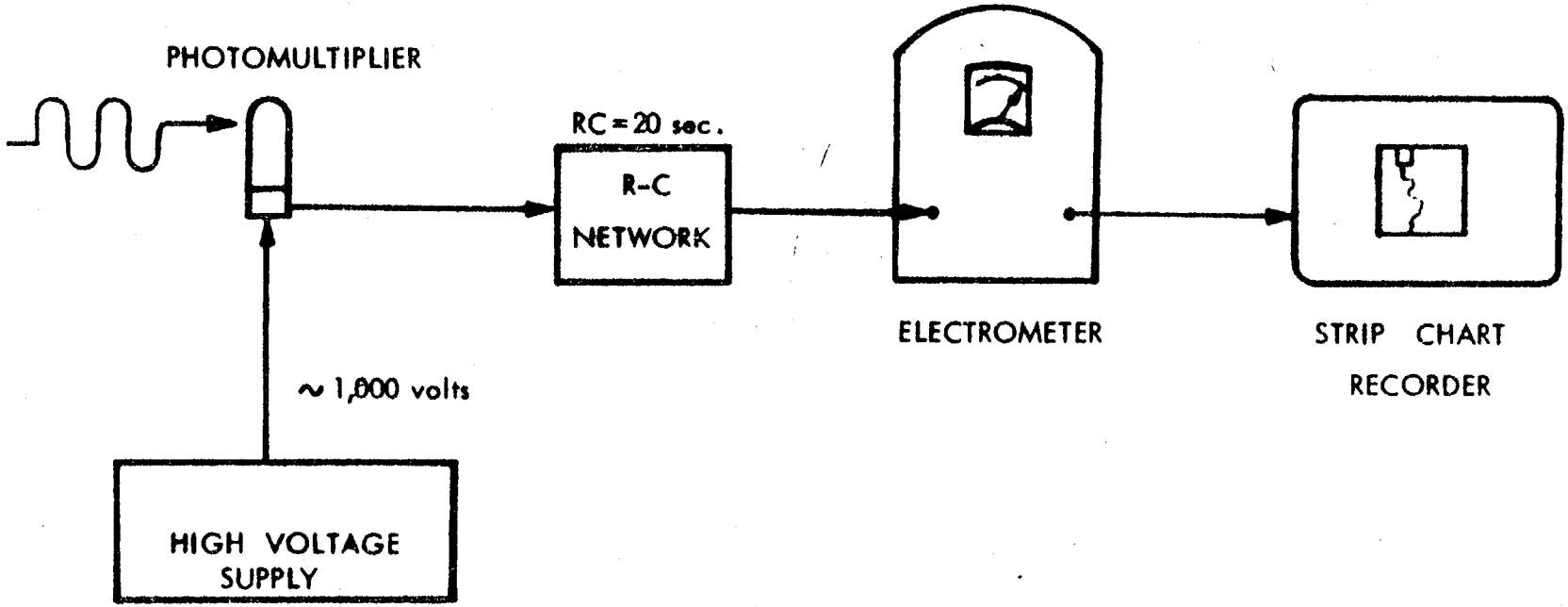

READ OUT CIRCUITS

SLIDE 4

meh 9/14/5

SLIDE 5

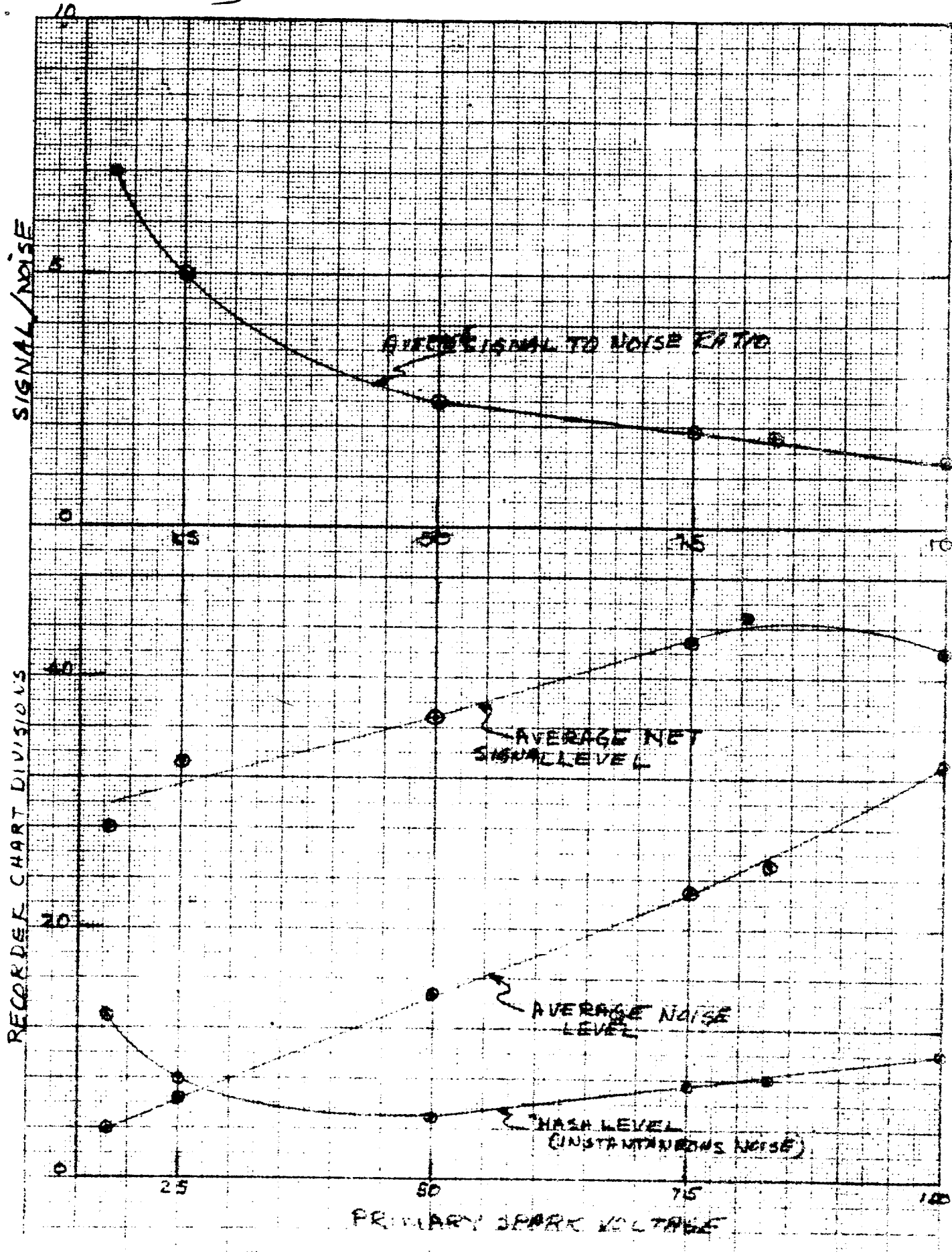

FIGURE EFFECT OF SPARK PRIMARY VOLTAGE

SLIDE 6

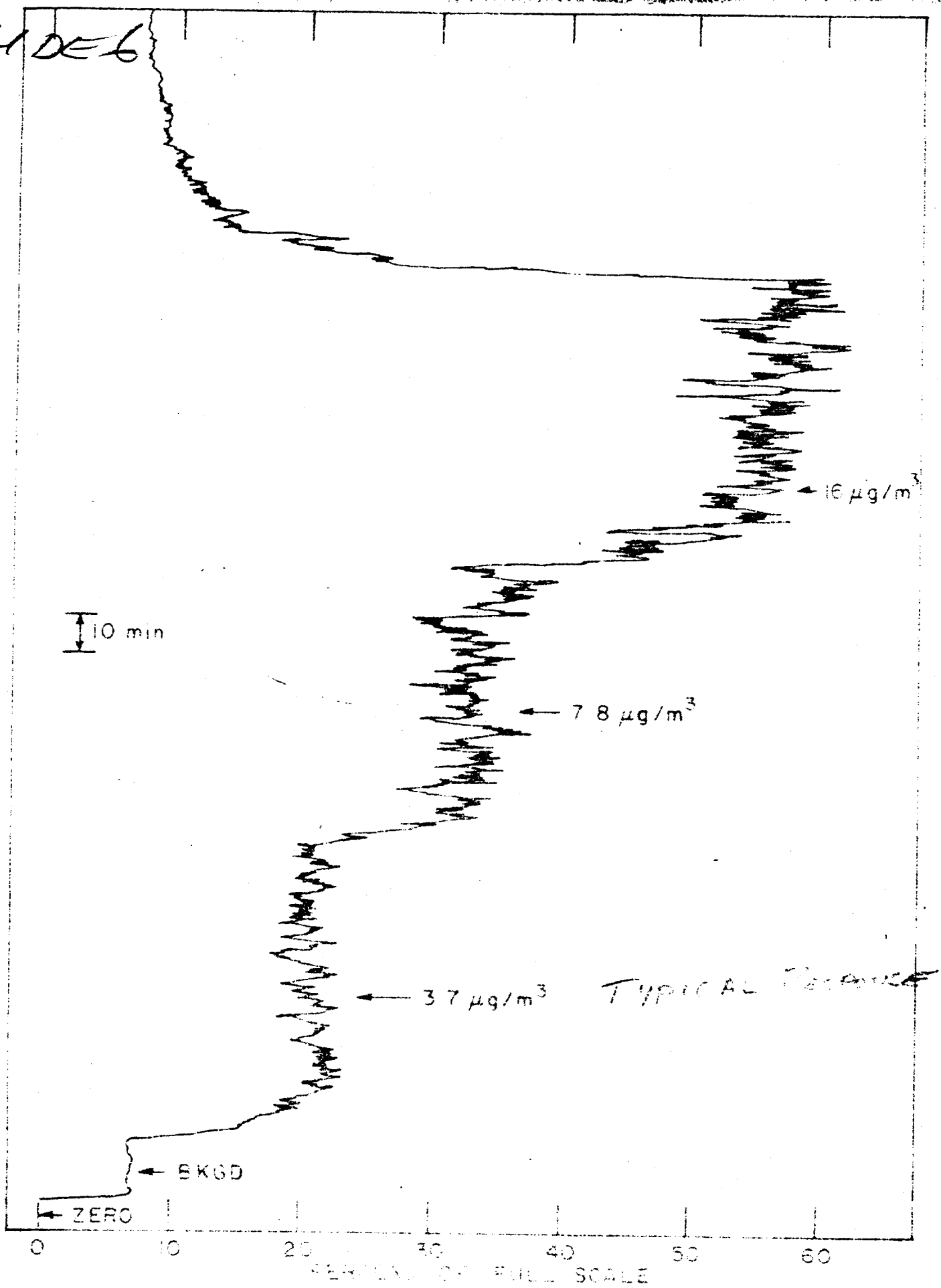

FIGURE

SLIDE 7

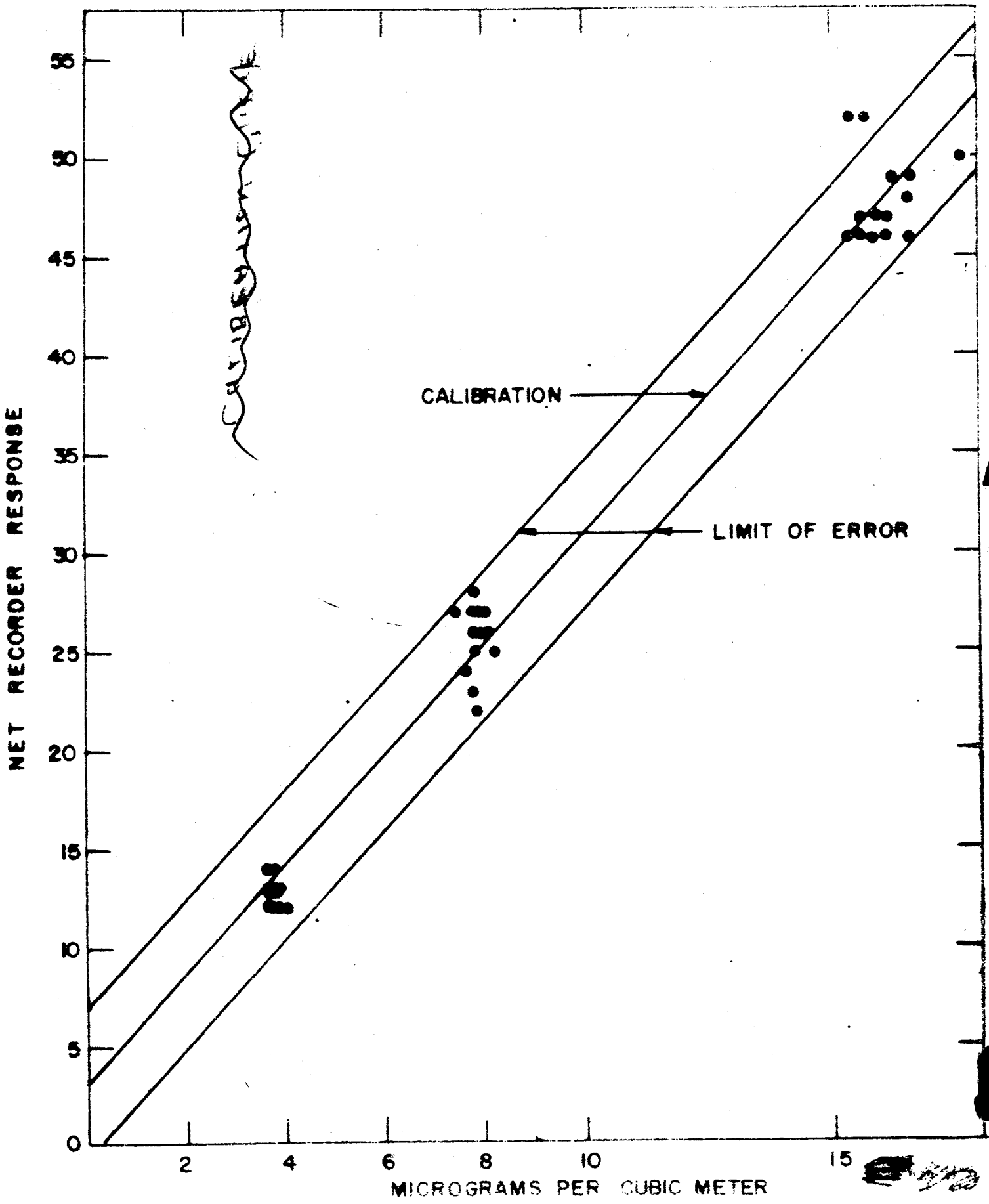
CALIBRATION
CALIBRATION
LIMIT OF ERROR
NET RECORDER RESPONSE
0
5
10
15
20
25
30
35
40
45
50
55
2
4
6
8
10
15
MICROGRAMS PER CUBIC METER