ORNL

OAK RIDGE NATIONAL LABORATORY
operated by
UNION CARBIDE CORPORATION
NUCLEAR DIVISION
for the
U.S. ATOMIC ENERGY COMMISSION

ORNL-TM-1737
276 pages

81

THE LOW-INTENSITY TESTING REACTOR
A FUNCTIONAL DESCRIPTION

C. D. Cagle and W. R. Casto

ChemRisk Document No. 873

NOTICE This document contains information of a preliminary nature and was prepared primarily for internal use at the Oak Ridge National Laboratory. It is subject to revision or correction and therefore does not represent a final report.

LEGAL NOTICE

This report was prepared as an account of Government sponsored work. Neither the United States, nor the Commission, nor any person acting on behalf of the Commission:

A. Makes any warranty or representation, expressed or implied, with respect to the accuracy, completeness, or usefulness of the information contained in this report, or that the use of any information, apparatus, method, or process disclosed in this report may not infringe privately owned rights; or

B. Assumes any liabilities with respect to the use of, or for damages resulting from the use of any information, apparatus, method, or process disclosed in this report.

As used in the above, "person acting on behalf of the Commission" includes any employee or contractor of the Commission, or employee of such contractor, to the extent that such employee or contractor of the Commission, or employee of such contractor prepares, disseminates, or provides access to, any information pursuant to his employment or contract with the Commission, or his employment with such contractor.

CONTENTS

	Page
LIST OF FIGURES	ix
LIST OF TABLES	xiii
PREFACE	xiv
1. BRIEF HISTORY	1-1
2. REACTOR SITE	2-1
2.1. Location	2-1
2.2. Population Density	2-1
2.3. Geophysical Features	2-10
2.3.1. Meteorology	2-10
2.3.2. Regional Topography and Geology	2-26
2.3.3. Regional Hydrology	2-27
2.3.4. LITR Site Topography, Geology, and Hydrology	2-29
2.3.5. Seismology	2-34
3. BUILDING	3-1
3.1. Introduction	3-1
3.2. Reactor Building	3-3
3.2.1. First Floor	3-3
3.2.2. Second Floor	3-8
3.2.3. Third Floor	3-8
3.3. Heating and Air Conditioning	3-13
4. CONTAINMENT, CELL VENTILATION, AND OFF-GAS	4-1
4.1. Introduction	4-1
4.2. Containment	4-1
4.3. Cell-Ventilation System	4-2
4.4. Off-Gas Systems	4-5
4.4.1. Normal Off-Gas (NOG)	4-5
4.4.2. Pressurizable Off-Gas (POG)	4-7
5. REACTOR COMPONENTS AND EXPERIMENT FACILITIES	5-1
5.1. Introduction	5-1
5.2. Core Components	5-2
5.2.1. Fuel Elements	5-2
5.2.2. Shim-Safety Rods	5-6
5.2.3. Regulating Rod	5-8

Page

5.2.4. Permanent Reflector 5-14
5.2.5. Removable Reflector 5-14
5.3. Reactor Tank and Associated Components 5-15
5.3.1. Tank Sections 5-15
5.3.2. Top Plug Assembly 5-25
5.3.3. Spent-Fuel Storage Racks 5-27
5.3.4. Fuel-Element Support Grid 5-29
5.3.5. Upper Assembly of Grids 5-33
5.3.6. Supports for the Upper and Lower Grids 5-35
5.3.7. Lower Shim-Safety-Rod Bearing Grid 5-35
5.3.8. Shim-Safety-Rod Shock Absorbers 5-37
5.4. Experiment Facilities and Ionization Chamber Tubes . . 5-37
5.4.1. Introduction 5-37
5.4.2. Beam Tubes 5-39
5.4.3. Pneumatic Tubes 5-40
5.4.4. Core-Box Positions 5-40
5.4.5. External Irradiation Tubes 5-47
5.4.6. Ionization-Chamber Tubes 5-47
6. REACTOR COOLING SYSTEM 6-1
6.1. Introduction 6-1
6.2. Coolant Flow Path 6-1
6.3. Seal Tank 6-5
6.4. Pumps 6-7
6.5. Heat Exchangers 6-7
6.5.1. Water-to-Air Heat Exchangers 6-7
6.5.2. Water-to-Water Heat Exchanger 6-10
6.6. Demineralizers 6-10
6.7. Filter 6-15
6.8. Strainer 6-15
6.9. Emergency Coolant Provisions 6-15
6.10. Reactor-Tank Pressure Relief 6-17
6.11. Precautions to Prevent Freezing 6-17
7. CORE PHYSICS, NUCLEAR DESIGN, AND HEAT TRANSFER 7-1
7.1. Introduction 7-1

Page

7.2. Nuclear Design 7-1
7.2.1. General Characteristics 7-1
7.2.2. Fuel Loadings and Flux Distribution 7-7
7.2.3. Nuclear Characteristics of Shim Rods 7-7
7.3. Fuel Element Design and Analysis 7-9
7.3.1. Fuel Element Design 7-13
7.3.2. Mechanical and Hydraulic Analyses 7-13
8. REACTOR INSTRUMENTATION AND CONTROLS 8-1
8.1. Introduction 8-1
8.2. Channel Isolation 8-1
8.3. Safety and Control Rods 8-2
8.4. Safety Systems 8-6
8.5. Other Nuclear Control Systems 8-8
8.5.1. Counting Channels 8-11
8.5.2. Log-N Channel 8-14
8.5.3. Servo System 8-15
8.6. Process System 8-21
8.7. Control Logic 8-25
8.8. Special Conditions 8-30
8.9. Layout 8-33
8.10. Startup and Run 8-36
8.11. Annunciators 8-40
8.12. Auxiliary Features 8-42
8.13. Remote Control 8-43
8.13.1. General 8-43
8.13.2. Criteria 8-44
8.13.3. Description of Installation 8-44
9. SHIELDING 9-1
9.1. Introduction 9-1
9.2. Reactor Shielding 9-1
9.3. Water-System Shielding 9-7
10. UTILITIES 10-1
10.1. Electrical Systems 10-1
10.1.1. Normal Power System 10-1

Page

10.1.2. Emergency Power System 10-1
10.2. Plant Water Systems 10-1
10.2.1. Potable Water System 10-8
10.2.2. Process Water System 10-8
10.2.3. Plant Demineralized Water System 10-8
10.2.4. Sprinkler System 10-10
10.3. Instrument Air System 10-10
10.4. Alarm and Communications Systems 10-10
10.4.1. Area Fire-Alarm System 10-13
10.4.2. Area Intercommunication System 10-13
10.4.3. Sound-Powered Phones 10-13
10.4.4. Dial Phones 10-13
10.4.5. Public-Address System 10-13
10.4.6. Evacuation Alarms 10-14
10.5. Steam System 10-14
11. WASTE-DISPOSAL SYSTEMS 11-1
11.1. Gaseous-Waste Disposal 11-1
11.2. Solid-Waste Disposal 11-1
11.3. Aqueous-Waste Disposal 11-2
12. ORGANIZATION AND ADMINISTRATION 12-1
12.1. Introduction 12-1
12.2. Organization 12-5
12.3. Training and Qualification of Reactor Operations Department Personnel 12-9
12.4. Technical Support Organizations 12-11
12.5. Method of Operation 12-16
12.6. Internal Safety Reviews 12-18

FIGURES

		Page
2.1.1.	Area Within 100 Miles of Site	2-2
2.1.2.	Map of Cities and Counties Surrounding Oak Ridge Area	2-3
2.1.3.	Twenty-Mile Radius Circle of Site	2-4
2.1.4.	Regional Map	2-5
2.1.5.	Contour Map of ORNL Area	2-6
2.1.6.	Map of ORNL Facilities	2-7
2.3.1.	Vertical Temperature Gradient	2-13
2.3.2.	Annual Frequency Distribution of Winds in the Vicinity of ORNL	2-16
2.3.3.	ORNL Area Seasonal Wind Roses - Inversion Conditions	2-18
2.3.4.	ORNL Area Seasonal Wind Roses - Lapse Conditions	2-19
2.3.5.	Wind Roses at Knoxville and Nashville for Various Altitudes	2-20
2.3.6.	Geological and Water Table Map of ORNL	2-30
3.1.1.	South Side of the LITR Building	3-2
3.2.1.	LITR Floor Plan, First Level	3-4
3.2.2.	LITR Control Room (Local)	3-5
3.2.3.	View of LITR East Room	3-6
3.2.4.	View of LITR West Room	3-7
3.2.5.	View of LITR Truck-Loading Room	3-9
3.2.6.	LITR Floor Plan, Second and Third Levels	3-10
3.2.7.	View of LITR Second-Floor Enclosure	3-11
3.2.8.	View of LITR Third Floor	3-12
4.3.1.	LITR Gaseous Waste Disposal Systems	4-3
4.3.2.	Flow Diagram of Gaseous Waste Disposal Systems in the Stack Area	4-6
4.4.1.	Filter Arrangement for the Pressurizable Off-Gas System (POG)	4-9
5.2.1.	LITR Fuel Element	5-3
5.2.2.	LITR Fuel Element	5-4
5.2.3.	Vertically Operating MTR-Type Shim-Safety Rods	5-7
5.2.4.	Vertical Cross Section of the LITR	5-9
5.2.5.	LITR Regulating Rod	5-11
5.2.6.	Horizontal Cross Section of the LITR	5-12

		Page
5.3.1.	Hydraulic Mock-Up of the MTR	5-16
5.3.2.	Dimensional Layout of the Reactor Vessel	5-17
5.3.3.	Assembly of LITR Vessel	5-18
5.3.4.	View of Inside of the Reactor Vessel During Construction	5-20
5.3.5.	Flanged Connection Between "C" and "D" Tank Sections	5-21
5.3.6.	View of Tank Section "D"	5-22
5.3.7.	Flanged Connection Between "D" and "E" Tank Sections	5-24
5.3.8.	Shock Absorber Assembly for the LITR Shim Rods	5-26
5.3.9.	Spider Alignment Device	5-28
5.3.10.	LITR Fuel-Element Support Grid	5-30
5.3.11.	Locking Mechanism for LITR Fuel-Element Support Grid	5-31
5.3.12.	Skirt Plate	5-32
5.3.13.	Upper Assembly of Grids	5-34
5.3.14.	Lower Shim-Safety Rod Bearing Grid	5-36
5.4.1.	LITR Beam-Hole Dimensions	5-38
5.4.2.	View of Reactor Tank During Construction	5-41
5.4.3.	LITR Pneumatic-Tube System	5-42
5.4.4.	Sample Capsule for Pneumatic Tube	5-43
5.4.5.	Experiment Tubes in the LITR Vessel	5-44
5.4.6.	Core-Box Facility Tube	5-45
5.4.7.	Typical Core-Box Experiment Installation	5-46
5.4.8.	View of Ionization Chamber Tubes	5-48
6.2.1.	Flow Diagram of the LITR Primary Water System	6-2
6.2.2.	Transition Piece and Expansion Joint	6-4
6.3.1.	Seal Tank	6-6
6.4.1.	LITR Pump Area	6-8
6.5.1.	The LITR Water-to-Air Heat Exchanger	6-9
6.5.2.	The LITR Water-to-Water Heat Exchanger	6-11
6.6.1.	LITR Demineralizer System	6-12
6.6.2.	LITR Cation Columns	6-13
7.2.1.	No. 1 Shim Rod Calibration, LITR	7-10
7.2.2.	No. 2 Shim Rod Calibration, LITR	7-11
7.2.3.	No. 3 Shim Rod Calibration, LITR	7-12

		Page
8.3.1.	Block Diagram of Control	8-4
8.4.1.	Ionization Chamber Positioning Device	8-9
8.4.2.	Ionization Chamber Tubing Layout	8-10
8.5.1.	No. 1 Fission Chamber Positioning Device, LITR	8-12
8.5.2.	No. 2 Fission Chamber Positioning Device, LITR	8-13
8.5.3.	Partial Elementary Diagram of Servo Input	8-16
8.5.4.	Logic Diagram of Control	8-20
8.6.1.	Primary Water Flow Diagram Showing Instrumentation	8-22
8.9.1.	LITR Control Panel	8-34
8.9.2.	Detailed Arrangement of the LITR Local Controls	8-35
8.13.1.	Control Room for Remote LITR Operation	8-45
8.13.2.	Section 1, LITR Remote Console	8-46
8.13.3.	Section 2, LITR Remote Console	8-47
9.1.1.	Radiation Readings in the LITR Building, Ground Level	9-2
9.1.2.	Radiation Readings in the LITR Building, Second and Third Levels	9-3
9.1.3.	Radiation Readings Around the Outside of the LITR Building	9-4
9.2.1.	Construction of LITR Shield	9-5
9.2.2.	Venting System for Beam Holes	9-6
9.3.1.	Inlet Water-Line Shielding	9-8
9.3.2.	Outlet Water-Line Shielding	9-9
10.1.1.	Electrical Power Distribution	10-2
10.1.2.	Electrical Power Distribution from Substation 3-1	10-3
10.1.3.	Electrical Power Distribution from Substation 3-2	10-4
10.1.4.	Electrical Power Distribution from Substation 3-3	10-5
10.1.5.	Electrical Power Distribution from Substation 4-4	10-6
10.1.6.	Emergency Electrical Power Distribution	10-7
10.2.1.	Water Demineralizer for Plant	10-9
10.2.2.	Demineralized Water Flow Diagram	10-11
10.3.1.	Compressed Air Distribution	10-12
10.5.1.	Steam Distribution	10-15
11.3.1.	Flow Diagram of the LITR Process Waste System	11-3
11.3.2.	Flow Diagram of the Reactor Area Process Waste System	11-4

Page

11.3.3. Flow Diagram of the LITR Intermediate-Level Waste System 11-5

12.2.1. ORNL Organization Chart 12-6

12.2.2. Operations Division Organization Chart 12-7

12.2.3. Communication Paths for LITR Management 12-8

TABLES

		Page
2.2.1.	Population of the Surrounding Towns, Based on 1960 Census	2-8
2.2.2.	Rural Population in Surrounding Counties	2-9
2.2.3.	Number of Employees in Specific Oak Ridge Areas (Estimated August, 1966)	2-9
2.2.4.	Estimated Population Distribution	2-11
2.3.1.	ORNL Climatological Standard Normal Temperatures (1931 - 1960)	2-12
2.3.2.	ORNL Average Monthly Precipitation Data	2-14
2.3.3.	Atmospheric Stability Constants at Oak Ridge	2-22
2.3.4.	Summary of Seasonal Frequency of Inversions	2-22
2.3.5.	Concentration of Radioactive Materials in Air - 1962	2-23
2.3.6.	Radioparticulate Fallout - 1962	2-24
2.3.7.	Concentration of Radioactive Materials in Rainwater - 1962	2-25
2.3.8.	Radioactive Content of Clinch River - 1962	2-25
2.3.9.	Stream Flow at Various Sections on White Oak Creek and Melton Branch	2-28
2.3.10.	Composition of Chicamauga Formation at the LITR Site	2-31
2.3.11.	Flows in Clinch, Emory, and Tennessee Rivers, 1945 - 1951	2-32
2.3.12.	Community Water Systems in Tennessee Downstream from ORNL, Supplied by Intakes on the Clinch and Tennessee Rivers or Tributaries	2-33
5.2.1.	LITR Fuel Element Dimensions	5-5
5.2.2.	Dimensions for the LITR Shim Rods	5-13
6.6.1.	LITR Demineralizer Information	6-10
7.1.1.	Comparative Data for the MTR and LITR	7-2
7.2.1.	Summary of Thermal Neutron Flux Measurements in the LITR	7-8
8.4.1.	LITR Ionization Chambers	8-6
8.5.1.	Servo System Limit Switches	8-19
8.6.1.	LITR Process Instrument Switch Information	8-23

PREFACE

The 3-Mw Low-Intensity Testing Reactor (LITR) is one of the first research reactors that was built using highly enriched fuel, with normal water as the coolant and moderator and beryllium as the reflector. Safety is ensured by a fast-acting shutdown system depending on thoroughly tested electronic equipment for initiation of scram signals and on the most dependable of all energy sources, gravity, for inserting the shim-safety rods into the reactor. A high-speed, sensitive, automatic servo system controls the power level. The core uses MTR fuel elements and is in a vessel equipped with coolant water lines arranged so that flow is downward through the core. The water is circulated, cooled, and cleaned continuously while the reactor is operating, which is on the order of 90% of the time.

Experiment facilities include beam holes, core positions, and pneumatic tubes. The average thermal neutron flux is $\sim 2 \times 10^{13}$ n cm^{-2} sec^{-1} in the core, and the maximum thermal neutron flux available in the reflector for research is $\sim 4 \times 10^{13}$ n cm^{-2} sec^{-1}.

Information about the LITR has gradually accumulated over a long period beginning around 1950 and continuing to the present. During this time the LITR, which started operation as a 500-kw training reactor, has been modified three times to allow increases of the power level to 1 Mw, 1.5 Mw, and finally to 3 Mw in order to make it more useful as a research tool. The instrumentation and controls have had two major renovations in addition to continuous updatings of individual components as found advisable. The reactor building has also been periodically upgraded as more strict containment regulations evolved.

Although most of the information related to the history and present status of the LITR has been available as separate bits in a number of reports, some of it has existed only in the memories of those associated with the reactor. Now, in order to assemble all of this information, an up-to-date description has been compiled; and a safety analysis has been made.

Because the LITR was built and improved stepwise over a period of several years and because procedures were not formalized in the early days, many of the decisions for doing things in a certain way were not well documented. As much as possible, this description tries to explain why things are the way they are, as well as to describe them.

1. BRIEF HISTORY

The LITR began as a hydraulic test facility for the Materials Testing Reactor. In 1949, after the hydraulic tests had been successfully completed, plans were made for continuing the use of the mock-up of the MTR as a facility in which to run the criticality experiments for the new type of reactor. This was done early in 1950. Results of these two groups of experiments can be found in the Materials Testing Reactor Project Handbook, ORNL 963, Appendix 4.

With the conclusion of these MTR tests, it became apparent that the mock-up could easily be converted into a low-power reactor for training the personnel who would eventually operate the MTR and for performing a limited number of experiments. From this idea came the initials for the name of the reactor, LITR; and the reactor was named, toward the end of 1950, the Low-Intensity Training Reactor. It was not until 1952, after the training had been completed, that the present name, the Low-Intensity Testing Reactor, was adopted. By March 2, 1951, the conversion of the mock-up to a 500-kw reactor was completed. This work consisted of the following:

1. Repainting the inside of the steel portions of the reactor tanks and some external piping to inhibit rusting.
2. Restacking the outer beryllium reflector to surround the core box with a minimum thickness of 8 in. of beryllium and installing a sheet aluminum housing to hold it in place.
3. Surrounding the reactor tank with a concrete block shield, extending the beam holes through the shield, and providing shielding plugs for the beam holes.
4. Providing access holes for the various ionization chambers needed for reactor control.
5. Adding a third shim-safety rod to the two used for the criticality tests.
6. Enclosing two sides and the top of the reactor with rooms to shelter experiments and attendant personnel.

7. Revising the reactor control room and the control instrumentation for continuous operation of the reactor.
8. Providing a 500-gpm recirculating cooling water system.

Early in 1951, the power level was 500 kw. During the summer of that year, while the MTR personnel were trained, the power level was raised to a nominal 1000 kw as estimated by neutron-flux measurements; however, it was later determined, by heat balance methods, that the power was actually 770 kw. As the training progressed, plans were made for the conversion of the Low-Intensity Training Reactor to the Low-Intensity Testing Reactor. Larger pumps were obtained and 8-in.-aluminum piping was installed to provide a 1000-gpm coolant system. A 2-Mw air-cooled heat exchanger was installed; and more shielding was added to the reactor, seal tank, and water lines. A series of tests was run to determine what would happen to the reactor fuel if all of the coolant water were suddenly and inadvertently lost from the reactor tank. The first phase of these tests was finished in May, 1952. From these experiments came the decision to install a spray tank that will always fill automatically when the reactor tank is filled and serve as a reservoir for water that will spray through nozzles over the core for half an hour if the water accidentally drains from the reactor tank. The concluding series of experiments with the spray tank in operation was completed in 1953. A report on all of these experiments has been issued (Water-Loss Test at the Low-Intensity Testing Reactor, ORNL-TM-632).

The results of the water-loss tests indicated that the power could be increased to 1500 kw; and this power level was first reached on April 7, 1952, with routine operation at this power beginning on April 25, 1952. Further testing and operating experience at 1500 kw indicated that a power level increase to 3000 kw would be feasible by adding shielding in a few locations, increasing the water flow to an already available 1200 gpm, and adding the shell-and-tube heat exchanger which uses single-pass process water as secondary coolant. The power level was increased to its present level of 3000 kw on September 2, 1953.

In January, 1953, a small demineralizer system for the reactor water was placed in operation on a by-pass stream. Before installation of the demineralizer, water purity was maintained by a continuous purge, supplying

water from the Laboratory demineralizer plant and discharging water continuously to the waste system. The small demineralizer was replaced by a large mixed-bed column in September, 1954. Later a small cation column was installed ahead of the mixed-bed column, and in 1966 the mixed-bed column was converted to an anion column preceded by two parallel sets of two small cation columns in series.

At about this same time, a filter capable of removing particles 5 microns in size was installed in another by-pass stream of about 200 gpm. Prior to this installation, the reactor water frequently became so murky that it was necessary to replace the water by partially draining the system and refilling with clear demineralized water before core servicing could be done.

Operation had become sufficiently routine by 1955 that a remote panel for running the reactor from the Graphite Reactor control room was designed, installed, and placed in service; however, it was not until early 1957 that final proof of safety of this type of operation was considered sufficiently demonstrated that complete approval was obtained. After that time, it was no longer necessary to have an operator in the local control room as long as there was one on duty at the remote desk. Remote operation proved to be highly practical; and, in 1963 when the Graphite Reactor was retired from service, operation of the LITR remotely was continued from the ORR control room.

As experiment space in the reflector of the LITR became more in demand and all of the access holes in the top plug became occupied, it was necessary to make new access tube penetrations through the side of the reactor tank section "A" to make available unused lattice positions. The first such experiment, installed in July, 1952, used a flexible, stainless steel bellows tube as a conduit for information leads and for cooling lines. The installation was through the large flanged opening on the south side of "A" tank. Formerly, during the days of hydraulic tests, this opening was one of the water inlet ports. In June, 1963, seven new access openings were made through the west side of "A" tank to accommodate experiment rigs which, prior to then, had access only through holes in the reactor top plug. This eliminated the necessity of having

to disconnect experiment leads each time the top plug was removed. These new entrances to the tank made it necessary to move the spray tank to the east side of the reactor vessel and to design and fabricate a new bearing support (spider) for the shim-rod drives.

The original assembly of fuel-element and upper shim-rod bearing grids covered the complete 5 x 9 core lattice, and experiment rigs with monitoring rigs or air cooling could be installed only in the four unused shim-rod positions in row 4 and one position in row 2. Also, each of these rigs had to be uncoupled from their control systems and moved to storage each time the core was refueled. In 1956 a new assembly of grids was installed which left rows 4 and 5 uncovered and row 3 half covered. This increased the spaces available for monitored experiment rigs from 5 to 28. In 1963, when the grids had to be replaced due to wear, row 1 was left only half covered so that another nine positions could accommodate monitored rigs. Because of fuel requirements, however, all of the 37 positions cannot accommodate experiment rigs simultaneously.

In 1963, replacement of control wiring, relays, and other instrumentation and controls components became necessary due to aging. At this time the old desk-type console in the LITR building was replaced with a vertical control panel since the reactor is routinely operated from the remote console in the ORR control room.

The only water leak of any significance in the external piping occurred in 1964 after twelve years of operation. This leak started gradually and increased to about 2500 gpd over a period of several weeks before it was located in an underground 8-in.-aluminum pipe. The cause of the leak was corrosion from the outside of the pipe apparently due to scratches or cracks through the bituminous protective coating painted on the pipe prior to installation.

2. REACTOR SITE

2.1. Location

The LITR and its ancillary facilities are located in the Roane County portion of the AEC reservation at Oak Ridge, Tennessee, and are shown in maps of increasing scale in Figs. 2.1.1 through 2.1.6. The LITR is located in the ORNL, X-10 site. It is ~140 ft northeast of Building 3001 (the ORNL Graphite Reactor, now shut down), ~50 ft north of Building 3042 (the Oak Ridge Research Reactor), and ~70 ft west of Building 3010 (the Bulk Shielding Reactor).

The LITR is located within the well-established ORNL X-10 controlled-access area. Adequate personnel and visitor control policies have been established so that only necessary operating personnel and persons having legitimate business are permitted within the immediate area around the LITR. Approximately four people are present in the reactor building during normal day-shift hours; no people are normally required in the building for off-shift operation.

2.2. Population Density

The total population of the four counties (Anderson, Knox, Loudon, and Roane) nearest the LITR site is 370,145. Of this number, 177,255 are located in cities with populations of more than 2500 persons. The rural population density in these four counties is about 135 persons per square mile. The average population density within a radius of 27.5 miles of the LITR site, as determined from the data in the 1960 census, is 147 persons per square mile. Table 2.2.1 lists the populations of the surrounding communities which have a population of over 500, together with their distance and direction from the LITR site. The rural population density in the four surrounding counties and in two other nearby counties is given in Table 2.2.2. A number of plants are located within the AEC-controlled area and nearby; the approximate number of employees located in each plant is given in Table 2.2.3. These data indicate the total employment at each facility and do not attempt to show the breakdown according to shifts. However, practically all of these employees work the normal 40-hr week.

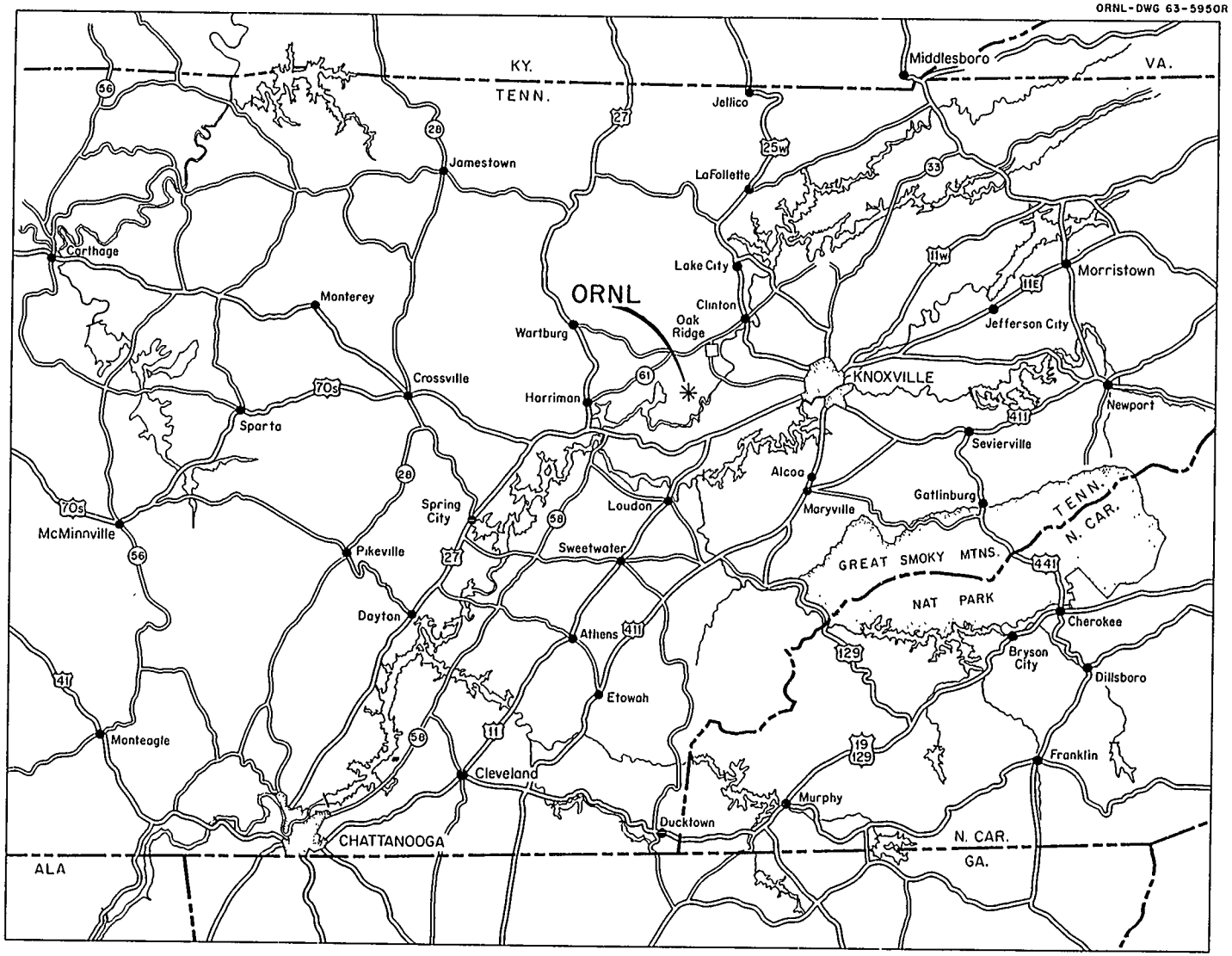

Fig. 2.1.1. Area Within 100 Miles of Site

ORNL-LR-DWG 38362AR

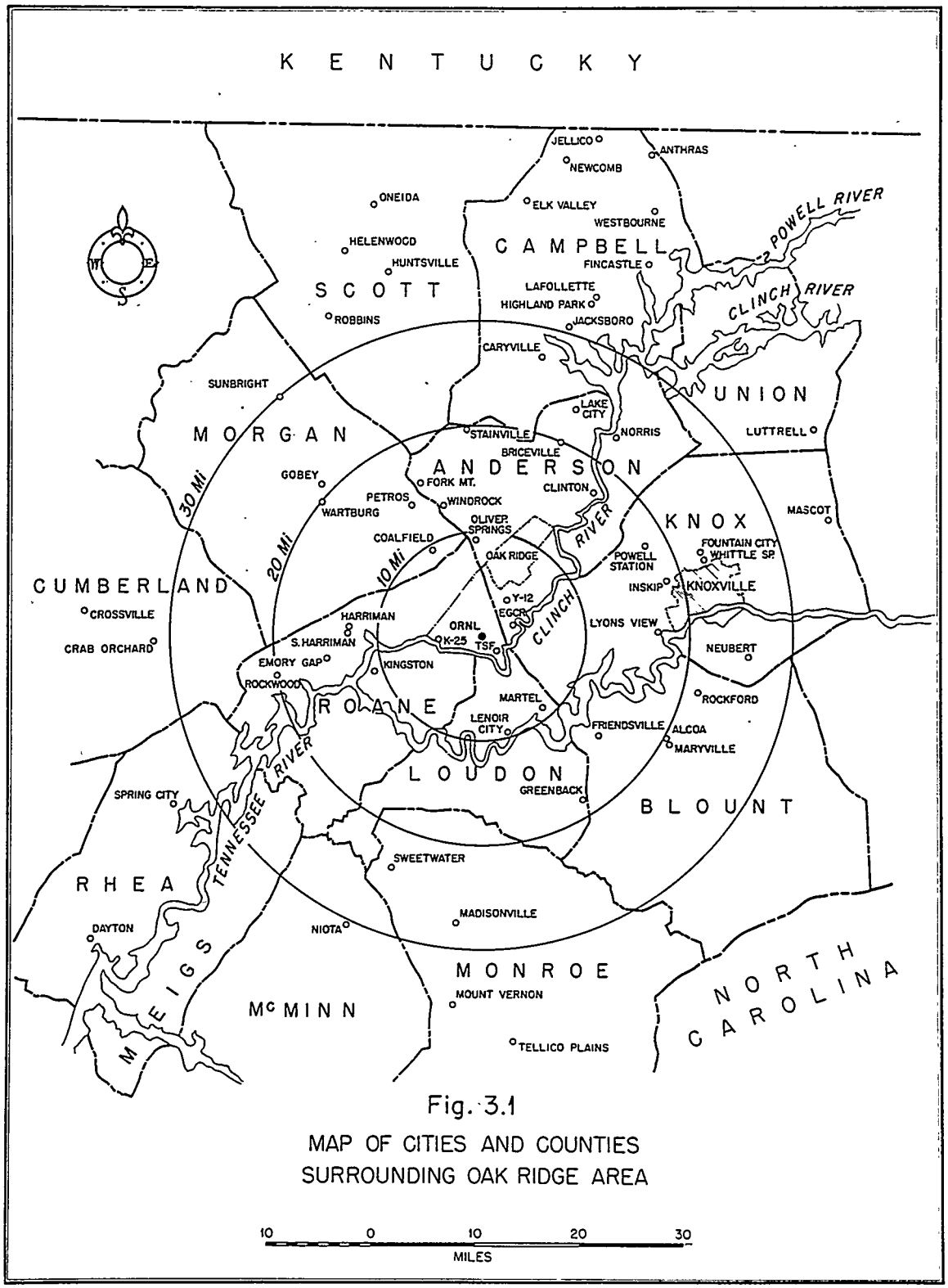

Fig. 3.1
MAP OF CITIES AND COUNTIES
SURROUNDING OAK RIDGE AREA

Fig. 2.1.2. Map of Cities and Counties Surrounding Oak Ridge Area

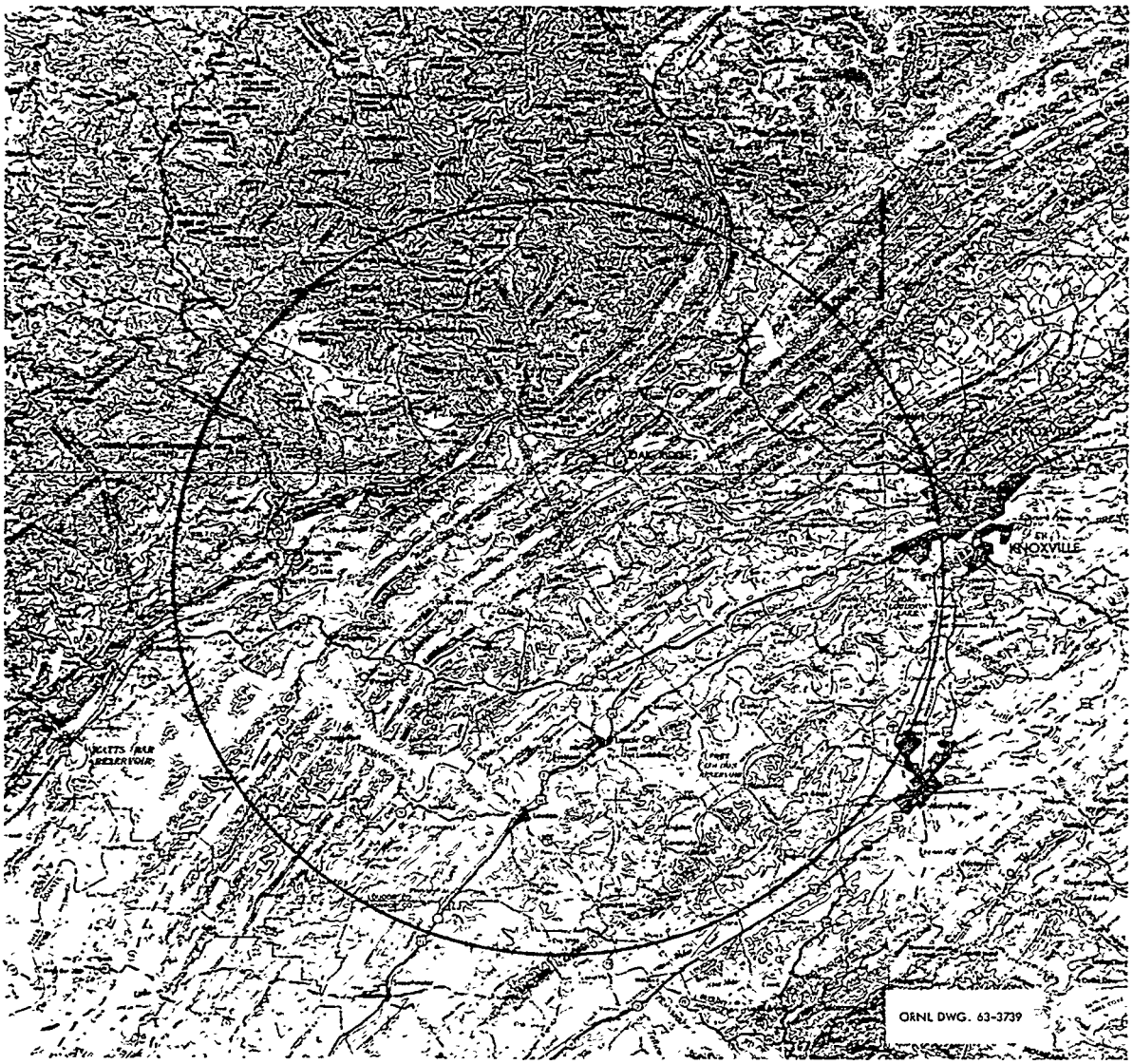

Fig. 2.1.3. Twenty-Mile Radius Circle of Site

ORNL-DWG 63-3744

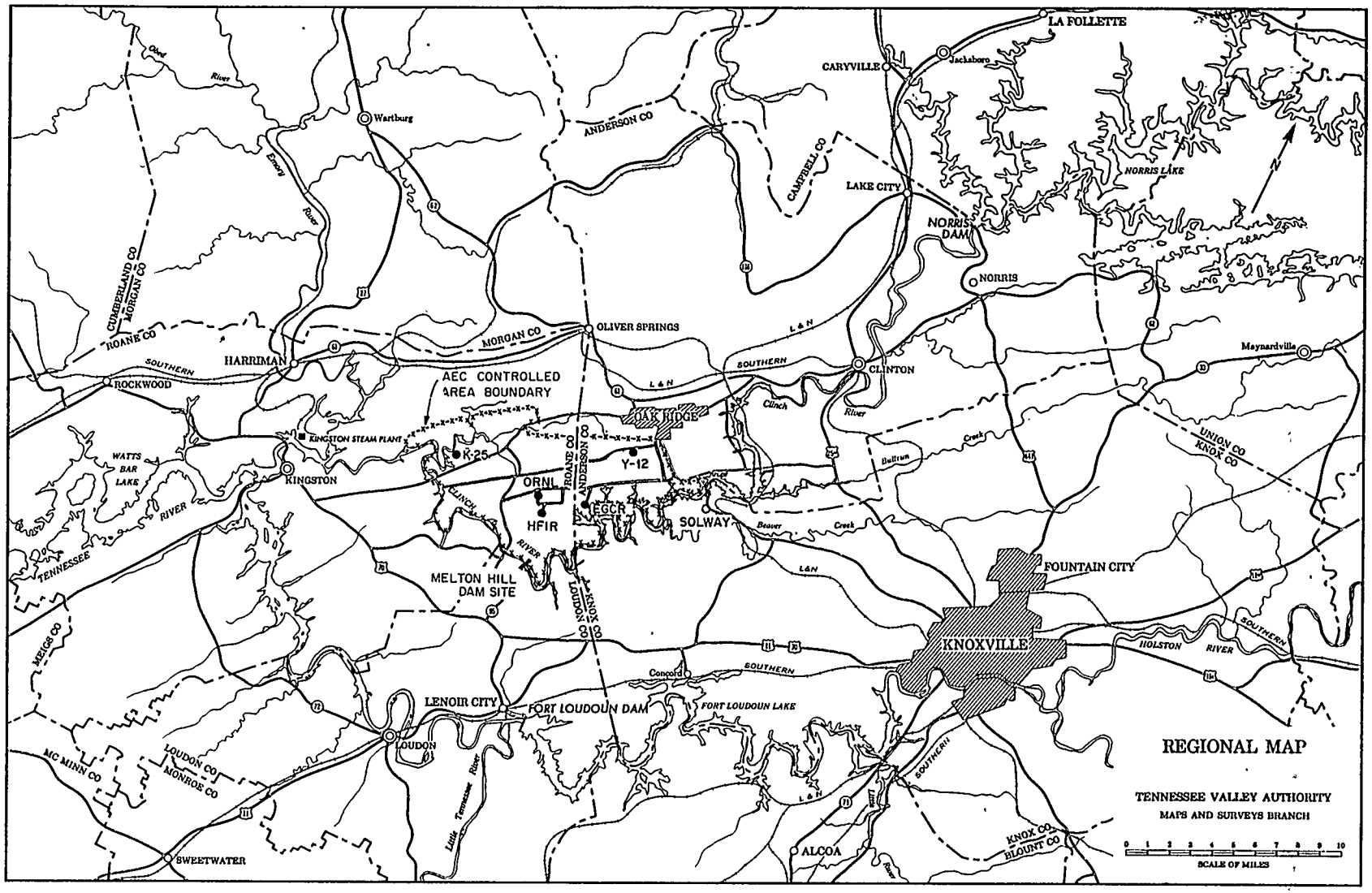

Fig. 2.1.4. Regional Map

ORNL-DWG 63-3743

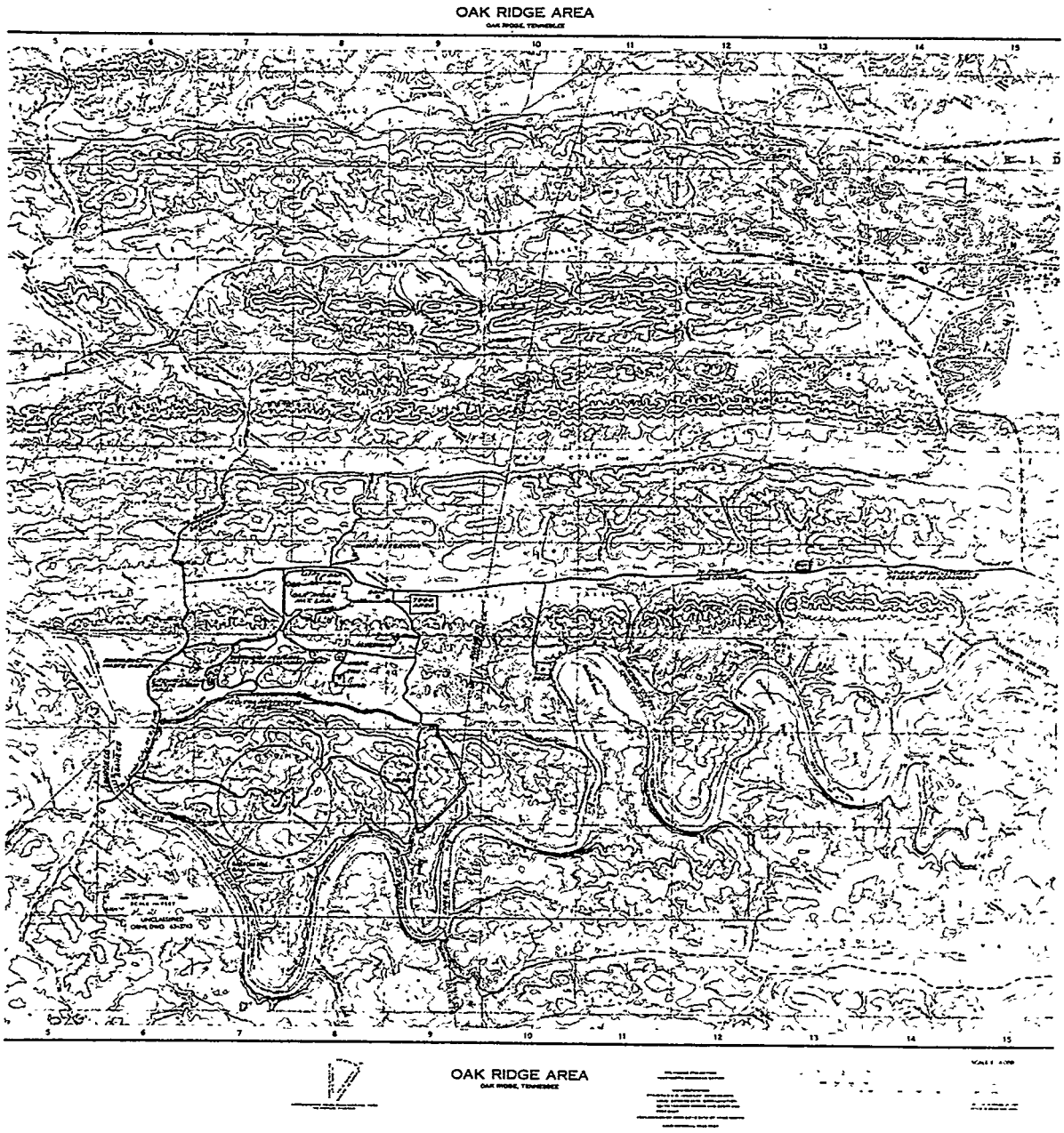

Fig. 2.1.5. Contour Map of ORNL Area

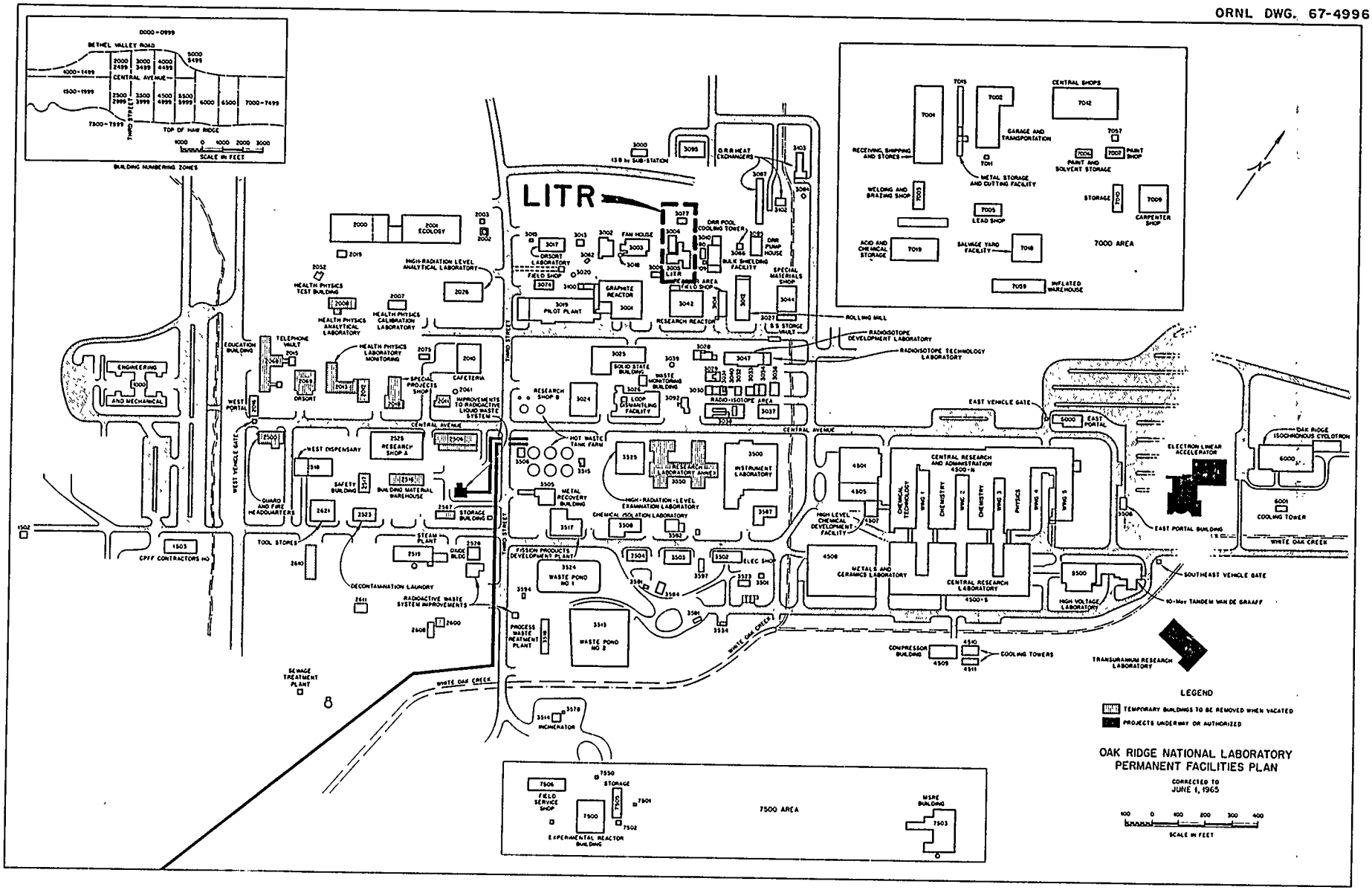

Fig. 2.1.6. Map of ORNL Facilities

Table 2.2.1. Population of the Surrounding Towns,[a] Based on 1960 Census

City or Town	Distance from LITR (miles)	Direction	Population	Percent of Time Downwind	
				Night	Day
Oak Ridge	5–12	NNE	27,124	5.6	5.5
Lenoir City	9	SSE	4,979	4.3	6.0
Oliver Springs	9	N	1,163	2.3	2.7
Martel	9	SE	500[b]	1.4	2.8
Coalfield	9	NW	650[b]	0.5	1.1
Windrock	13	N by W	550[b]	2.3	2.7
Kingston	11	WSW	2,010	9.5	11.3
Harriman	13	W	5,931	2.2	3.7
South Harriman	13	W	2,884	2.2	3.7
Petros	14	NW by N	790[b]	1.4	2.8
Fork Mountain	16	NNW	700[b]	2.3	2.7
Emory Gap	15	W	500[b]	2.2	3.7
Friendsville	15	SE	606	1.4	2.8
Clinton	17	NE	4,943	11.6	9.0
South Clinton	17	NE	1,356	11.6	9.0
Powell	17	ENE	500[b]	8.3	6.8
Briceville	20	NNE	1,217	5.6	5.5
Wartburg	20	NW by W	800[b]	1.4	2.8
Alcoa	20	ESE	6,395	2.0	2.0
Maryville	21	ESE	10,348	2.0	2.0
Knoxville	18–25	E	111,827	1.5	2.7
Greenback	20	S by E	960[b]	5.5	4.9
Rockwood	21	W by S	5,343	2.2	3.7
Rockford	22	SE	5,345	1.4	2.8
Fountain City[c]	22	ENE	10,365	8.3	6.8
Lake City	23	NNE	1,914	5.6	5.5
Norris	23	NNE	1,389	5.6	5.5
Sweetwater	23	SSW	4,145	8.4	12.7
Neubert	27	ENE	600[b]	8.3	6.8
John Sevier	27	E	752[b]	1.5	2.7
Madisonville	27	S	1,812	5.5	11.9
Caryville	27	N by E	1,234[b]	9.5	6.1
Sunbright	30	NW	600[b]	0.5	1.1
Jacksboro	30	N by E	679	8.4	12.7

[a]S. E. Beall, R. B. Briggs, and J. H. Westsik, Addendum to ORNL-CF-61-2-46, *Molten-Salt Reactor Experiment Preliminary Hazards Report*, Addendum ORNL-CF-61-21-46, pp. 55, 56 (Aug. 14, 1961).

[b]1950 census.

[c]Now part of Knoxville.

Table 2.2.2. Rural Population in Surrounding Counties[a]

County	Total Area[b] (Square Miles)	Rural Population[c]	Density (Number of People per Square Mile)	Estimated Population		
				Within 10-Mile Radius	Within 20-Mile Radius	Within 30-Mile Radius
Anderson	338	26,600	79	395	14,200	22,800
Blount	584	38,325	66	0	6,720	23,200
Knox	517	138,700	238	13,100	46,400	96,000
Loudon	240	18,800	78	6,080	16,900	18,700
Morgan	539	13,500	25	225	3,625	8,630
Roane	379	12,500	33	3,070	9,170	11,110

[a]S. E. Beall, R. B. Briggs, and J. H. Westsik, Addendum to ORNL-CF-61-2-46, *Molten-Salt Reactor Experiment Preliminary Hazards Report*, Addendum ORNL-CF-61-2-46, pp. 55, 56 (Aug. 14, 1961).

[b]Does not include area within Oak Ridge reservation.

[c]1960 census — does not include communities with a population of 500 or more.

Table 2.2.3. Number of Employees in Specific Oak Ridge Areas (Estimated August 1966)

Plant or Area	Distance from LITR (miles)	Direction	Number of Employees
ORNL			
X-10 area personnel	0–0.50		3400
Construction personnel	0–1.25		200
7000 area personnel	1.0	E	300
Melton Valley personnel	0.75–2.50	SE	110
Total			4010
ORGDP			
ORGDP area personnel	5.0	W	2500
Construction personnel	5.0	W	70
Total			2570
Y-12			
Y-12 area personnel	5.0	NE	5500
ORNL personnel	5.0	NE	1000
Construction personnel	5.0	NE	300
Total			6800
University of Tennessee			
Agricultural Research Laboratory	5.0	NE	160
Bull Run Steam Plant			
Normal operating personnel (one unit)	11.5	NE	180
Construction personnel	11.5	NE	620
Total			800

An estimate has been made of the distribution of the resident population in each of the 16 adjacent 22 1/2° sectors of concentric circles originating at the LITR. Eight different incremental distances from the LITR site were considered: 0-0.5, 0.5-1, 1-2, 2-3, 3-4, 4-5, 5-10, and 10-20 miles radii. The estimated resident population distribution is given in Table 2.2.4. These data are representative of the population in this area at all times. Very little variation is experienced owing to either part-time occupancy or seasonal variation. Population density in the area has been reasonably stable for a number of years and is expected to remain so.

2.3. Geophysical Features

2.3.1. Meteorology

Oak Ridge is located in a broad valley between the Cumberland Mountains, which lie to the northwest of the area, and the Great Smokey Mountains, which lie to the southeast. These mountain ranges are oriented northeast-southwest. The valley between them is corrugated by broken ridges 300 to 500 ft high oriented parallel to the main valley. The local climate is noticeably influenced by topography.

(a) Temperature.[1] - The coldest month is normally January, but differences between the mean temperatures of the three winter months of December, January, and February are comparatively small. July is usually the hottest month, but differences between the mean temperatures of the summer months of June, July, and August are also comparatively small. Mean temperatures of the spring and fall months progress in orderly fashion from cooler to warmer and warmer to cooler, respectively, without a secondary maximum or minimum. Temperatures of 100°F or higher are unusual, having occurred during less than one-half of the years of the period on record; and temperatures of zero and below are rare.

[1] U. S. Department of Commerce, Weather Bureau, Local Climatological Data with Comparative Data 1962, Oak Ridge, Tennessee, Area Station (X-10).

Table 2.2.4. Estimated Population Distribution

Radius (miles)	Sector															
	N	NNE	NE	ENE	E	ESE	SE	SSE	S	SSW	SW	WSW	W	WNW	NW	NNW
0–0.5	0	0	0	0	0	0	0	0	0	0	0	0	0	0	0	0
0.5–1	0	0	0	0	0	0	0	0	0	0	0	0	0	0	0	0
1–2	0	0	0	0	0	0	0	0	0	0	0	0	0	0	0	0
2–3	0	0	0	0	0	41	20	0	90	90	90	45	0	0	0	0
3–4	0	0	0	0	41	87	40	20	135	135	135	45	0	0	0	0
4–5	0	0	0	87	87	90	60	40	180	180	180	45	2,751	0	0	200
5–10	7944	20,428	460	7,706	7,706	7,706	783	6546	1567	1564	781	781	781	781	781	781
10–20	5320	13,318	6650	56,414	55,914	23,131	6388	5660	4700	4700	1563	3573	16,741	2542	1500	4190

The annual mean maximum and minimum temperatures are 69.4 and 47.6°F, respectively, with an annual mean temperature of 58.5°F. The extreme low and high temperatures are -10°F and +103°F, recorded in January, 1966, and September, 1954, respectively. Table 2.3.1 lists the average monthly temperature range based on the period 1931 to 1960, adjusted to represent observations taken at the present standard location of the weather station.

Table 2.3.1. ORNL Climatological Standard Normal Temperatures (1931-1960)

Month	Temperature °F		
	Maximum	Minimum	Average
January	48.9	31.2	40.1
February	51.6	31.8	41.7
March	58.9	37.0	48.0
April	70.0	46.3	58.2
May	79.0	54.8	66.9
June	86.1	63.3	74.7
July	88.0	66.7	77.4
August	87.4	65.6	76.5
September	83.0	59.2	71.1
October	72.2	47.7	60.0
November	58.6	36.5	47.6
December	49.4	31.3	40.4
Annual	69.4	47.6	58.5

(b) Vertical Temperature Gradient. - Information on the temperature gradient, frequency, and mean wind speed for each month are found in a recent report on meterology of the Oak Ridge area.[2] The seasonal and annual averages as derived from this information are presented in Fig. 2.3.1.

[2] W. F. Hilsmeier, Supplementary Meteorological Data for Oak Ridge, ORO-199 (March 15, 1963).

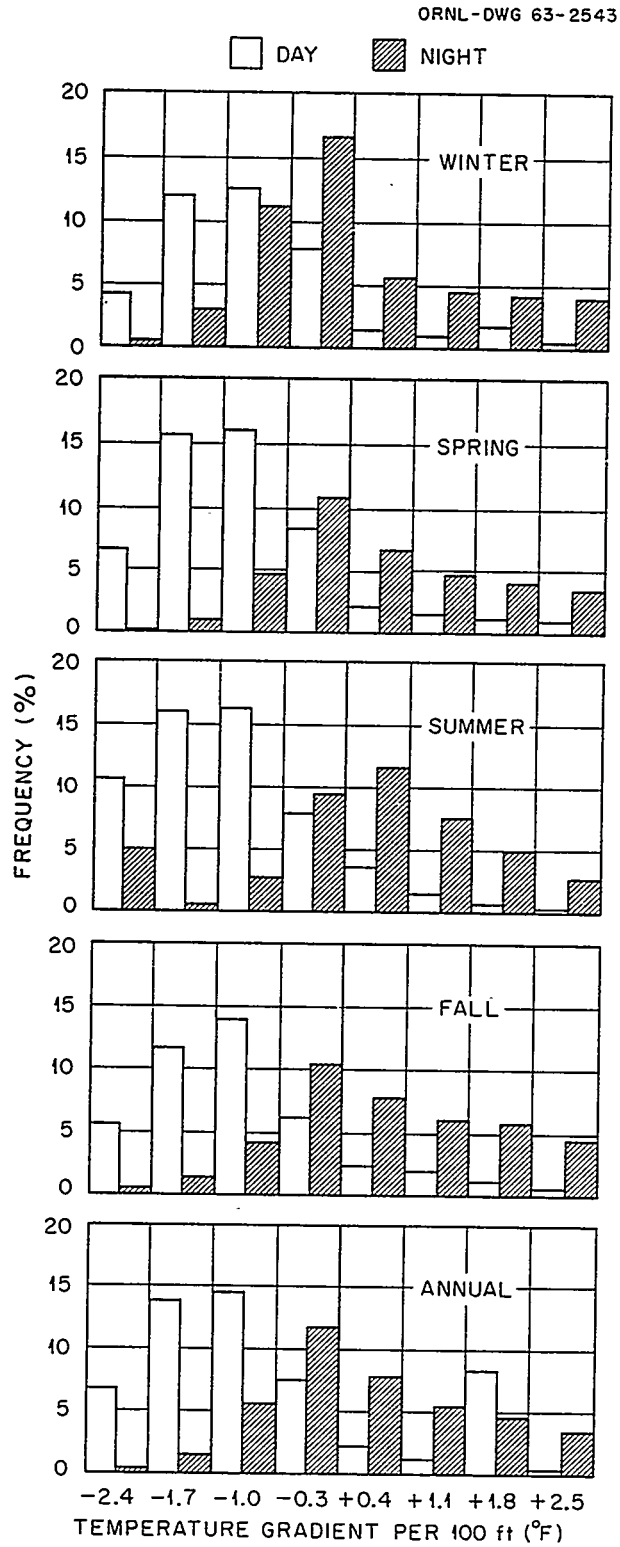

Fig. 2.3.1. Vertical Temperature Gradient

(c) Precipitation.[3] - Precipitation in the ORNL area is normally well distributed throughout the year, with the drier part of the year occurring in the early fall. Winter and early spring are the seasons of heaviest precipitation, with the monthly maximum normally occurring from January to March. A secondary maximum, due to afternoon and evening thunder-showers, occurs in the month of July. September and October are usually the driest months.

The average and maximum annual precipitations are 51.52 and 66.2 in., respectively. The maximum rainfall in the area in a 24-hr period was 7.75 in., recorded in September, 1944. The recurrence interval of this amount of precipitation in a 24-hr period has been estimated to be about 70 years. The maximum monthly precipitation occurs normally in March and has a value of 5.44 in.

The average monthly precipitation is given in Table 2.3.2.

Table 2.3.2. ORNL Average Monthly Precipitation Data

Month	Precipitation (In.)
January	5.24
February	5.39
March	5.44
April	4.14
May	3.48
June	3.38
July	5.31
August	4.02
September	3.59
October	2.82
November	3.49
December	5.22
Total	51.52

[3] U. S. Department of Commerce, Weather Bureau, Local Climatological Data with Comparative Data 1962, Oak Ridge, Tennessee, Area Station (X-10).

Light snow usually occurs in all the months from November to March, but the total monthly snowfall is often only a trace. The total snowfall for some winters is less than 1 in. The average snowfall for the period from 1948 to 1961 was 6.9 in. The maximum snowfall in a 24-hr period was 12.0 in., which occurred in March, 1960. The maximum monthly snowfall (21.0 in.) also occurred in March, 1960.

The heavy fogs that occasionally occur are almost always in the early morning and are of relatively short duration.

(d) Wind.[4] - The valleys in the vicinity of the ORNL site are oriented northeast-southwest, and considerable channeling of the winds in the valley occurs. This is evident in Fig. 2.3.2, which shows the annual frequency distribution of winds in the vicinity of ORNL. The flags on these wind-rose diagrams point in the direction from which the wind comes. The prevailing wind directions are up-valley from southwest and west-southwest approximately 40% of the time, with a secondary maximum of down-valley winds from northeast and east-northeast 30% of the time. The prevailing wind regimes reflect the orientation of the broad valley between the Cumberland Plateau and the Smoky Mountains, as well as the orientation of the local ridges and valleys. The gradient wind in this latitude is usually southwest or westerly, so the daytime winds tend to reflect a mixing of the gradient winds. The night winds are the result of drainage of cold air down the local slopes and the broader Tennessee Valley. The combination of these two effects, as well as the daily changes in the pressure patterns over this area, gives the elongated shape to the typical wind roses.

During inversions, the northeast and east-northeast winds occur most frequently, usually at the expense of the southwest and west-southwest winds. The predominance of light northeast and east-northeast winds under stable conditions is particularly noticeable in the summer and fall, when the lower wind speeds aloft and the smaller amount of cloudiness allow the nocturnal drainage patterns to develop.

---

[4] Aircraft Reactor Experiment Hazards Summary Report, ORNL-1407 (Nov. 24, 1952).

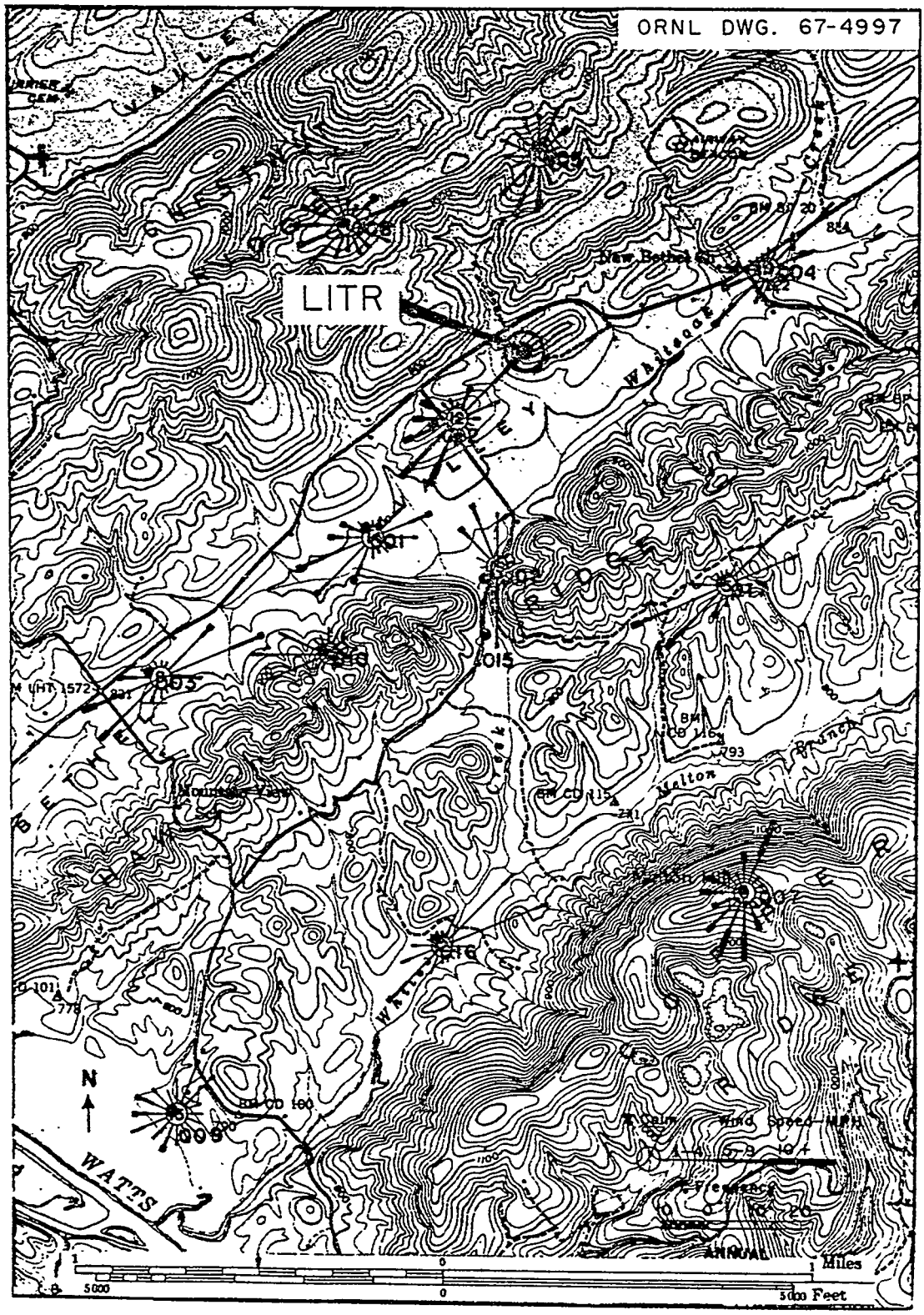

Fig. 2.3.2. Annual Frequency Distribution of Winds in the Vicinity of ORNL

Wind roses prepared from five years (1956-1960) of data[2] are shown in Figs. 2.3.3 and 2.3.4. These represent the wind direction, its frequency, and the percent calm under inversion and lapse conditions in the ORNL area.

Considerable variation is observed both in wind speed and direction within small areas in Bethel Valley. In general, at night or under stable conditions, the winds tend to be from the northeast or east-northeast and rather light in the valleys, regardless of the gradient wind. However, strong winds aloft will control the velocities and directions of the valley winds, reversing them or producing calms when opposing the local drainage. During the day, the surface winds tend to be in the same direction as winds aloft, with increasing conformity as the upper wind speed increases. Only with strong winds aloft or winds parallel to the valleys would it be of value to attempt to extrapolate air movements for any number of miles by using valley winds. In a well-developed stable situation, however, a very light air movement will follow a valley as far as the valley retains its structure, even though the prevailing winds a few hundred feet above the ground are in an entirely different direction. In any particular valley location, the wind direction will be governed by the local valley wind regime and the degree of coupling with the upper winds.[4]

A comparison of pilot balloon observations made throughout 1949 and 1950 at Knoxville and Oak Ridge shows that above about 2000 ft the wind roses at these two stations are almost identical. This similarity of data makes possible the use of the longer period of record (1927 to 1950) for Knoxville and tends to minimize the importance of abnormalities introduced by the use of the short record at Oak Ridge.

Annual wind roses are shown for Knoxville (1927 to 1950) in Fig. 2.3.5. Since pilot balloon observations are made only when low clouds, dense fog, or precipitation are absent, they are not representative of the upper wind at all times. Three years of radio wind-balloon data for Nashville (1947 to 1950) are available. These are observations taken without regard to the current weather at the time of observation. Comparison of these wind roses for Knoxville and Nashville indicates that the modes for winds above 3000 m above mean sea-level should be shifted to west instead of west-northwest when observations with rain are included in the set.

ORNL-DWG 63-2944

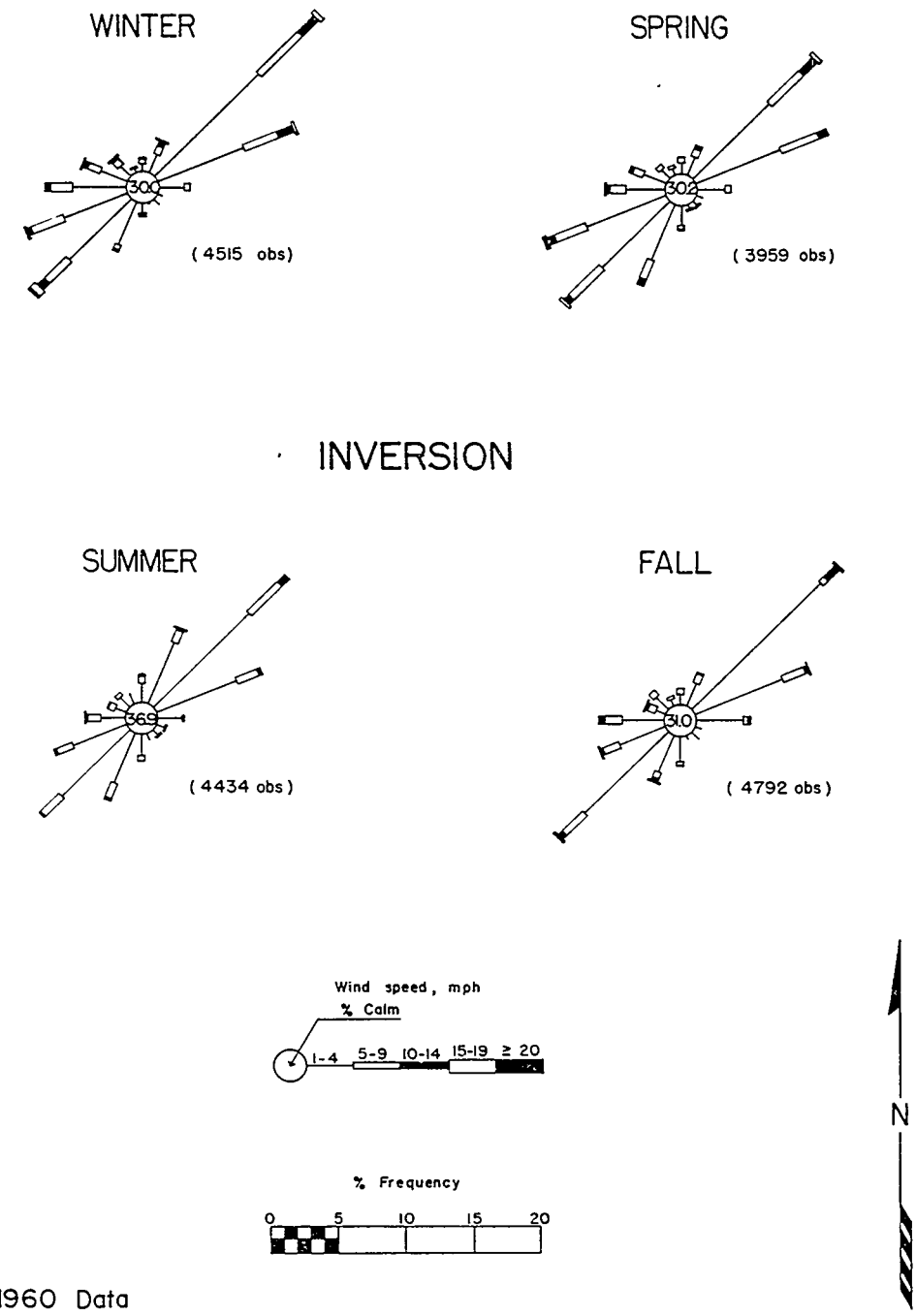

1956-1960 Data

Fig. 2.3.3. ORNL Area Seasonal Wind Roses - Inversion Conditions

ORNL-DWG 63-2943

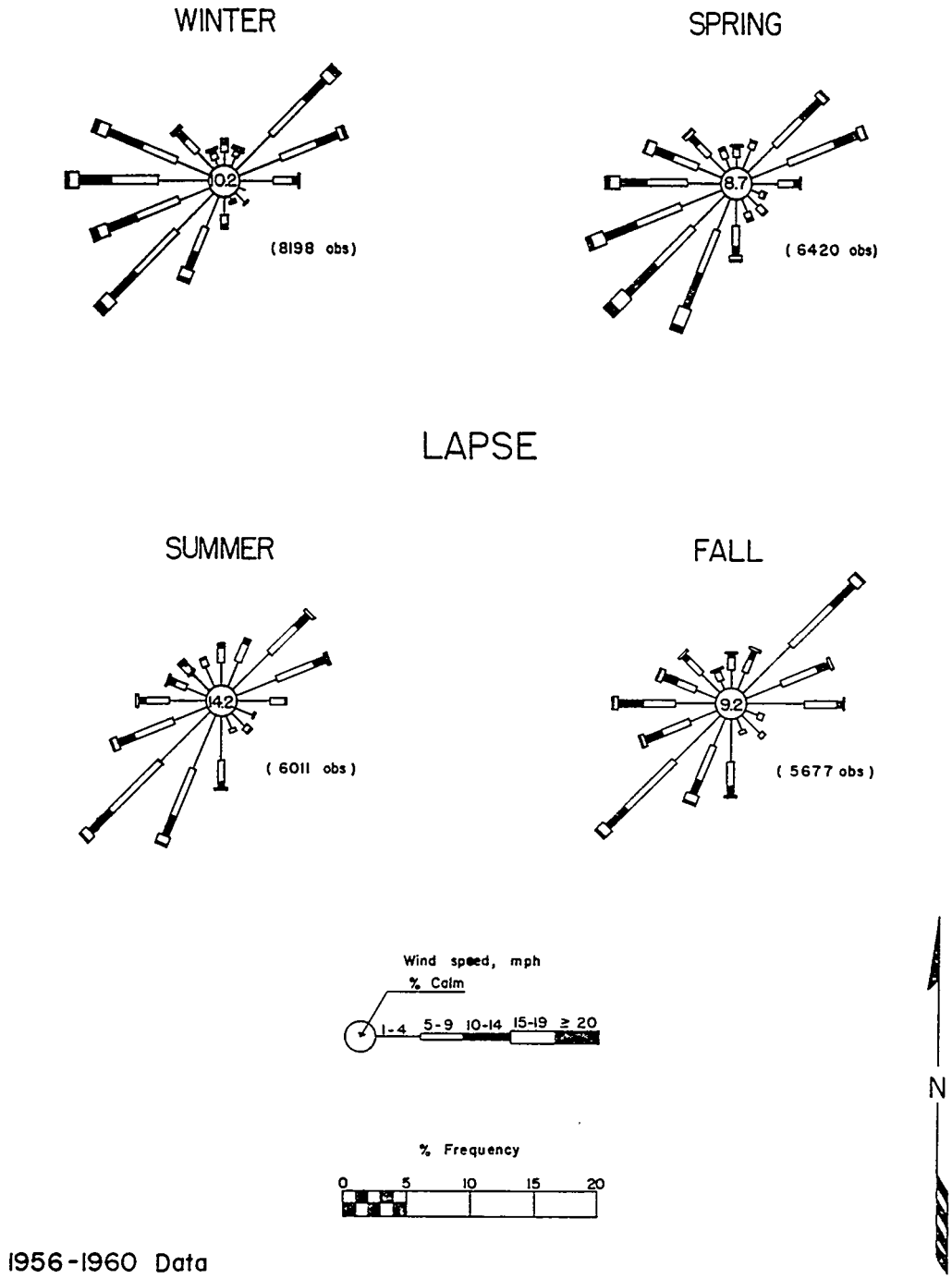

1956-1960 Data

Fig. 2.3.4. ORNL Area Seasonal Wind Roses - Lapse Conditions

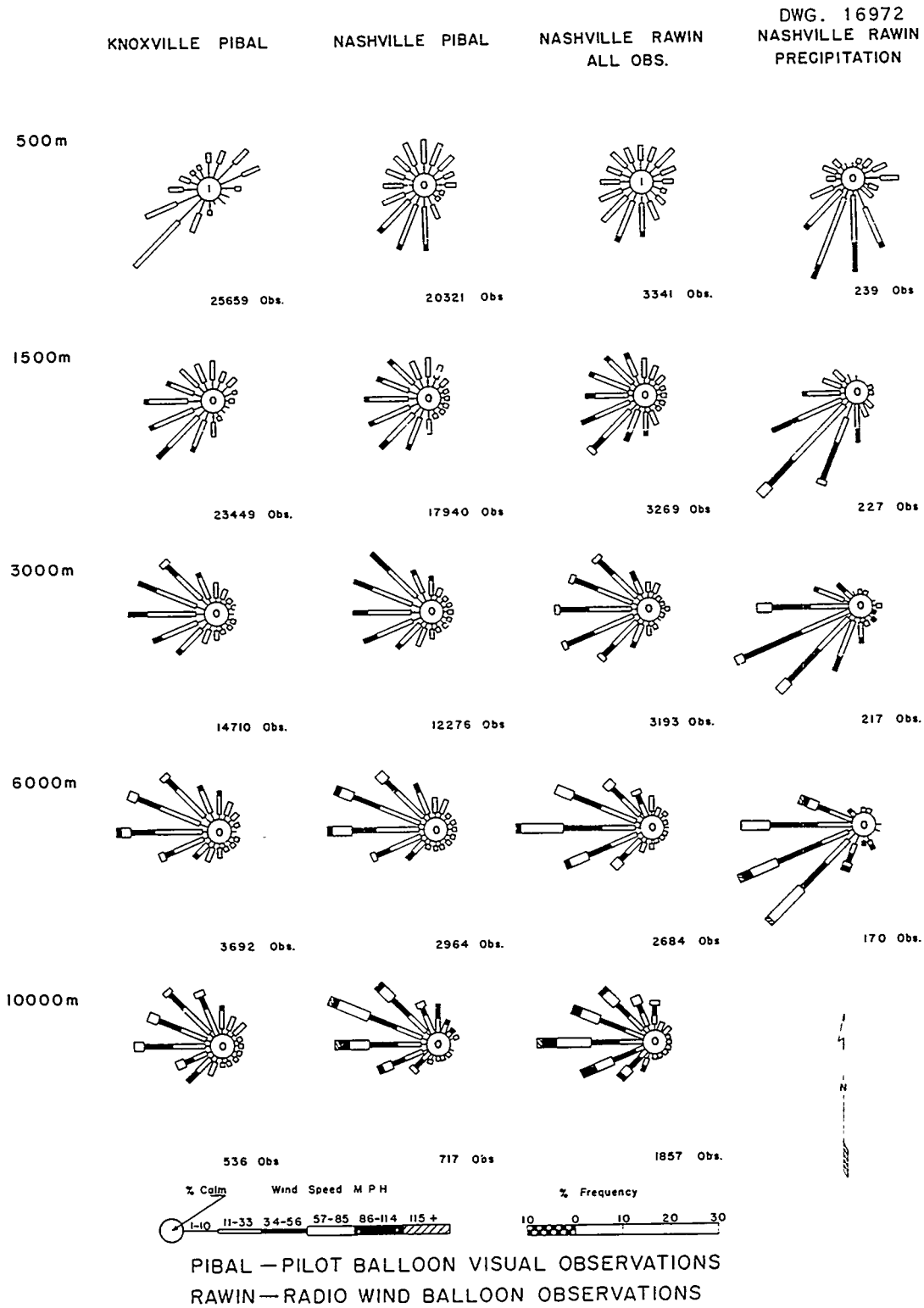

PIBAL — PILOT BALLOON VISUAL OBSERVATIONS
RAWIN — RADIO WIND BALLOON OBSERVATIONS

Fig. 2.3.5. Wind Roses at Knoxville and Nashville for Various Altitudes

The northeast-southwest orientation of the valley between the Cumberland Plateau and the Smoky Mountains influences the wind distribution over the Tennessee Valley up to an altitude of about 5000 ft, although the variations in the Valley do not extend above about 2000 ft. Above about 5000 ft, the southwesterly mode is dominated by the prevailing westerlies usually observed at these latitudes.

Previous investigation of the relation of wind direction to precipitation indicated that the distribution in wind directions is little different from that of wind observations made without precipitation.[4] This is consistent with the experiences of forecasters to the extent that there is little correlation between surface wind direction and rain, particularly in rugged terrain. Figure 2.3.5 shows the upper winds measured at Nashville during the period 1948 to 1950 when precipitation was occurring at observation time. In general, the prevailing wind at a given level is shifted to the southwest from west and to the south-southwest from the southwest with the shift being most marked in the winter. Wind velocities are somewhat higher during the occurrence of precipitation.

Tornadoes rarely occur in the valley between the Cumberlands and the Great Smokies, and it is highly improbable that winds greater than 100 mph would ever occur at the ORNL site.

(e) Atmospheric Diffusion Characteristics. - The method proposed by Pasquill[5] is widely used to calculate the dispersion of airborne materials in the lower atmosphere. This method requires a knowledge of two parameters known as the horizontal and vertical dispersion coefficients. These coefficients have been tabulated according to the stability of the lower atmosphere for six different conditions, identified as A to F. Condition A represents extreme instability, and condition F represents extremely stable conditions. Table 2.3.3 gives the frequency of these various conditions at the ORNL site.

A study[6] of the average duration of inversions in the Oak Ridge area indicates that they have a length of 8 hr during winter, 9 hr during spring, 9 hr during summer, and 10 hr during fall.

---

[5] F. Pasquill, "The Estimation of the Dispersion of Windborne Material", Meteorol. Mag. 90 (1063), 33 (1961).

[6] W. M. Culkowski, AEC-ORO, to T. H. Row, ORNL, private communication, July 8, 1963.

Table 2.3.3. Atmospheric Stability Constants at Oak Ridge[a]

Condition	Occurrence (%)
A	Never
B	8
C	40
D	20
E	22
F	10

[a]W. F. Hilsmeier, AEC-ORO, to T. H. Row, ORNL, private communication, June 27, 1963.

The percentage of time during which inversion conditions exist is given for the four seasons in Table 2.3.4.

Table 2.3.4. Summary of Seasonal Frequency of Inversions

Season	Frequency of Inversion (%)
Winter	31.8
Spring	35.1
Summer	35.1
Fall	42.5
Annual	35.9

Atmospheric contamination by long-lived fission products and fallout occurring in the general environment of the Oak Ridge area is monitored by a number of stations surrounding the area.[7] This system provides data to aid in evaluating local conditions and to assist in determining the spread or dispersal of contamination should a major incident occur.

(f) Environmental Radioactivity. - Data on the environmental levels of radioactivity in the Oak Ridge area[7] are given in Tables 2.3.5 through 2.3.8.

[7]Applied Health Physics Annual Report for 1962, ORNL-3490 (September 25, 1963).

Table 2.3.5. Concentration of Radioactive Materials in Air – 1962

Averaged weekly from filter paper data

Station No.	Location	Long-Lived Activity ($\mu c/cm^3$)	Number of Particles by Activity Ranges[a] $<10^5$ dis/24 hr	10^5–10^6 dis/24 hr	10^6–10^7 dis/24 hr	$>10^7$ dis/24 hr	Total	Particles per 1000 ft^3
			Laboratory Area					
		$\times 10^{-13}$						
HP-1	S 3587	38	128	1.6	0.00	0.00	129	3.1
HP-2	NE 3025	43	122	1.9	0.04	0.00	124	3.5
HP-3	SW 1000	37	129	2.1	0.10	0.02	131	2.1
HP-4	W Settling Basin	21	91	1.2	0.04	0.00	93	1.6
HP-5	E 2506	51	115	1.2	0.04	0.04	117	3.9
HP-6	SW 3027	33	136	1.5	0.02	0.02	137	2.4
HP-7	W 7001	40	115	1.8	0.00	0.00	117	2.3
HP-8	Rock Quarry	39	132	1.5	0.00	0.02	133	2.5
HP-9	N Bethel Valley Rd.	31	145	1.6	0.00	0.00	146	2.3
HP-10	W 2075	38	126	1.3	0.00	0.00	128	3.1
Average		37	124	1.6	0.02	0.01	125	2.7
			Perimeter Area					
HP-31	Kerr Hollow Gate	34	135	1.6	0.04	0.04	137	2.7
HP-32	Midway Gate	37	132	2.1	0.02	0.00	134	2.6
HP-33	Gallaher Gate	32	113	1.4	0.00	0.02	114	2.2
HP-34	White Wing Gate	34	153	1.5	0.00	0.00	155	3.0
HP-35	Blair Gate	39	168	1.6	0.00	0.02	169	3.3
HP-36	Turnpike Gate	39	158	2.2	0.02	0.04	161	3.2
HP-37	Hickory Creek Bend	34	114	1.6	0.02	0.00	115	2.3
Average		36	139	1.7	0.01	0.02	141	2.8
			Remote Area					
HP-51	Norris Dam	43	139	2.3	0.04	0.00	141	2.6
HP-52	Loudon Dam	42	130	2.8	0.10	0.00	133	2.4
HP-53	Douglas Dam	44	150	2.6	0.02	0.00	153	2.8
HP-54	Cherokee Dam	40	164	2.4	0.04	0.02	167	3.0
HP-55	Watts Bar Dam	45	157	2.0	0.04	0.00	159	2.9
HP-56	Great Falls Dam	46	166	2.3	0.00	0.00	168	3.1
HP-57	Dale Hollow Dam	38	171	1.6	0.00	0.04	172	2.9
Average		43	154	2.3	0.03	0.01	157	2.8

[a]Determined by filtration techniques.

Table 2.3.6. Radioparticulate Fallout – 1962

Averaged weekly from gummed paper data

Station No.	Location	Long-Lived Activity ($\mu c/cc$)	Number of Particles by Activity Ranges					Total Particles per ft^2
			$<10^5$ dis/24 hr	10^5–10^6 dis/24 hr	10^6–10^7 dis/24 hr	$>10^7$ dis/24 hr	Total	
			Laboratory Area					
		$\times 10^{-13}$						
HP-1	S 3587	15	79	2.1	0.12	0.06	81	42
HP-2	NE 3025	17	88	2.3	0.04	0.06	91	49
HP-3	SW 1000	15	83	2.0	0.15	0.06	86	42
HP-4	W Settling Basin	14	73	2.3	0.08	0.04	75	48
HP-5	E 2506	14	86	2.0	0.08	0.04	91	50
HP-6	SW 3027	16	101	2.9	0.02	0.02	104	61
HP-7	W 7001	15	89	2.4	0.02	0.06	92	49
HP-8	Rock Quarry	17	89	2.6	0.00	0.08	91	46
HP-9	N Bethel Valley Rd.	16	88	2.9	0.06	0.12	91	41
HP-10	W 2075	15	100	2.3	0.04	0.00	103	55
Average		15	88	2.4	0.06	0.05	91	48
			Perimeter Area					
HP-31	Kerr Hollow Gate	17	103	2.13	0.13	0.10	105	47
HP-32	Midway Gate	16	99	2.6	0.10	0.06	102	46
HP-33	Gallaher Gate	14	82	2.4	0.10	0.00	85	42
HP-34	White Wing Gate	18	104	2.2	0.19	0.08	106	47
HP-35	Blair Gate	15	124	2.0	0.06	0.04	126	50
HP-36	Turnpike Gate	16	109	3.5	0.08	0.02	112	57
HP-37	Hickory Creek Bend	16	85	2.3	0.04	0.08	87	47
Average		16	101	2.5	0.10	0.05	103	48
			Remote Area					
HP-51	Norris Dam	14	86	2.2	0.12	0.04	89	36
HP-52	Loudon Dam	13	70	2.7	0.06	0.06	73	29
HP-53	Douglas Dam	13	77	2.7	0.06	0.08	80	35
HP-54	Cherokee Dam	14	81	2.9	0.13	0.06	84	35
HP-55	Watts Bar Dam	16	81	2.2	0.14	0.08	83	37
HP-56	Great Falls Dam	14	98	2.2	0.06	0.02	100	39
HP-57	Dale Hollow Dam	14	96	2.0	0.08	0.06	98	33
Average		14	84	2.4	0.09	0.06	87	35

Table 2.3.7. Concentration of Radioactive Materials in Rainwater – 1962

Averaged weekly by stations

Station No.	Location	Activity in Collected Rainwater ($\mu c/cm^3$)
	Laboratory Area	
		$\times 10^{-7}$
HP-7	W 7001	10.3
	Perimeter Area	
HP-31	Kerr Hollow Gate	11
HP-32	Midway Gate	12
HP-33	Gallaher Gate	10
HP-34	White Wing Gate	11
HP-35	Blair Gate	11
HP-36	Turnpike Gate	10
HP-37	Hickory Creek Bend	11
Average		11
	Remote Area	
HP-51	Norris Dam	14
HP-52	Loudon Dam	11
HP-53	Douglas Dam	13
HP-54	Cherokee Dam	11
HP-55	Watts Bar Dam	14
HP-56	Great Falls Dam	16
HP-57	Dale Hollow Dam	11
Average		13

Table 2.3.8. Radioactive Content of Clinch River – 1962

Location	Concentration of Nuclides of Primary Concern in Units of 10^{-8} $\mu c/cm^3$						Average Concentration of Total Radioactivity 10^{-8} $\mu c/cm^3$	$(MPC)_w$ [a] 10^{-6} $\mu c/cm^3$	Percent of $(MPC)_w$
	Sr^{90}	Ce^{144}	Cs^{137}	$Ru^{103-106}$	Co^{60}	Zr^{95}–Nb^{95}			
Mile 41.5	0.16	0.14	0.02	0.78	*b*	0.42	1.5	0.90	1.7
Mile 20.8[c]	0.15	0.02	0.09	21	0.18	0.09	34	4.6	7.4
Mile 4.5[d]	0.34	0.20	0.07	16	0.32	0.54	17	3.5	4.9

[a]Weighted average calculated for the mixture, using $(MPC)_w$ values for specific radionuclides recommended in *NBS Handbook* 69.

[b]None detected.

[c]Values given for this location are calculated values based on the levels of waste released and the dilution afforded by the river.

[d]Center's Ferry (near Kingston, Tenn., just above entry of the Emory River).

2.3.2. Regional Topography and Geology

The area under consideration is within the Oak Ridge Reservation in Roane and Anderson Counties, Tennessee. White Oak Creek is a tributary of the Clinch River, entering that river from the north bank just above Jones Island at about Mile 20.8 of the Clinch. The watershed of the creek, which extends in a generally northeast direction from its mouth, has an area of 6 sq mi and is roughly diamond shaped. It lies primarily in Roane County with a very small portion of the upper watershed in Anderson County.

The topography is typical of the Valley and River area, characterized by ridges and valleys running northeast-southwest, which are a result of the geological structure and stratigraphy. The rocks in the area dip 20 to 30 degrees in approximately a southeasterly direction. The more resistant rocks support the ridges, and the less resistant ones have been eroded to form the valleys. The same formations are repeated by the intervention of a major thrust fault. Elevations in the area range from about 750 ft where White Oak Creek enters Clinch River to 1356 ft at Melton Hill, giving a maximum relief of about 600 ft. The ground elevation at the LITR is about 820 ft.

Four principal rock formations are present in the area: the Rome sandstone of Cambrian age; the Conasauga shale also of Cambrian age; the Chicamauga limestone of Ordovician age; and the Knox dolomite of Cambro-Ordovician age.

The Rome formation, which forms Haw Ridge, consists of evenly bedded, fine-grained sandstone and shale of red, green, and other colors. In the Oak Ridge area the Rome formation is more than 1000 ft thick.

Layers of the Rome formation dip beneath the Conasauga shale which underlies all of Melton Valley. Although the residual material that covers the Conasauga is quite uniform in appearance, the formation may be subdivided into four distinct types of rocks on the basis of core drilling. At its base is a zone of dark red silty shale about 300 ft thick with numerous thin beds of light green sandstone. Overlying this layer is about 450 ft of dark gray calcareous shale with numerous thin beds of light gray crystalline limestone. Above this is a transitional

zone of interbedded shale and limestone. The top zone of the Conasauga, which forms the northwest slope of Copper Ridge, is predominantly limestone. In Bear Creek Valley this zone is about 300 ft thick.

In Bethel Valley, the Knox group of formations, about 2600 ft thick, lies above the Conasauga. It consists largely of light-to-dark-gray cherty dolomitic limestone. It is a ridge-former and underlies Haw Ridge immediately southeast of Bethel Valley and Chestnut Ridge immediately northwest of Bethel Valley. The Knox is nearly everywhere covered by a cherty residual white-to-red clay soil that ranges from 30 to more than 100 ft in thickness.

The Chicamauga limestone, which stratigraphically overlies the Knox, underlies Bethel Valley, in which the X-10 Plant is located. This unit, which is about 1000 ft thick in the area, consists of thinly bedded limestone and shale. Bedrock is overlain by a thin blanket of residual clay soil rarely more than 10 ft thick.

2.3.3. Regional Hydrology.

(a) Ground Water. - Information on the occurrence of ground water in the sandstone and shale of the Rome formation is sparse, since few wells have been drilled in the formation. However, the Rome is well expressed in many road cuts through the water gaps in Haw Ridge; and observations of its physical properties indicate that the formation is probably quite impermeable and that the rate of ground-water movement through it is relatively low.

The Chicamauga limestone formations in Bethel Valley are almost devoid of permeability below a depth of about 100 ft. Exploratory drilling in Bear Creek Valley, which is underlain by the Conasauga group, indicated that limestones in the upper part of the Conasauga contain cavities several feet wide and extending at least 100 ft below the surface.

In general, the ability of the Conasauga to transmit water or other fluids increases with increasing lime content. Hence, the lower two members, which underlie the northwest side of Bethel Valley, transmit water less readily than the more limey upper members which underlie the valley to the southeast. Observations of water levels in wells in Bethel Valley indicate that the water table may be as much as 60 ft below the land surface on upland areas; but at points of lower elevation along White Oak Creek, it is at or just beneath the ground surface.

Ground water in the Knox formation occurs in, and moves through, solution cavities, some of which are cavernous. There are many sinkholes in the areas of outcrop, and sizeable springs issue from the bases of the ridges. Because of the high permeability of the cavernous bedrock, which permits free and rapid movement of ground water, the depth of water may exceed 100 ft along ridge tops. Frequently, the position of the water table coincides approximately with the interface between rock and residual clay overburden.

(b) Stream Flow. - The U. S. Geological Survey has operated gaging stations to obtain continuous records of stream flow at sections on White Oak Creek and Melton Branch. Below is summarized the information from four stations (Table 2.3.9); the natural flow at all four is affected by operation at Oak Ridge.

Table 2.3.9. Stream Flow at Various Sections on White Oak Creek and Melton Branch

Drainage Area (square miles)	Records Available	Average Discharge		Maximum Discharge		Minimum Daily Discharge
		Years	cfs	cfs	Date	
			White Oak Creek at White Oak Lake Dam			
6.0	7/1953–9/1955	2	11.2	669	12/29/54	No flow July 17–20, 1953; December 1, May 18–19, 1954; and September 3–6, 1955
			White Oak Creek Below ORNL[a]			
3.6	6/1950–7/1953 7/1955 to date	6	9.37	642	8/30/50	1.9 cfs Oct. 2, 1950
			Melton Branch, Upstream from White Oak Lake[b]			
1.5	8/1955 to date	4	2.228	121	1/21/59	No flow many days during August through November 1955
			White Oak Creek at ORNL[c]			
2.1	6/1950–7/1955			616	8/2/50	0.7 cfs November 2, 1950; August 2, 8, 12, 13, 21, 26, 28, 30, and 31, 1951; September 8 and 9, 1951; October 14, 1951; and July 25 and 26, 1953

[a]0.1 mile upstream from mouth of Melton Branch.

[b]0.1 mile upstream from White Oak Creek.

[c]1.2 miles upstream from Melton Branch, 1000 ft above effluent from settling basins.

2.3.4. LITR Site Topography, Geology, and Hydrology

In 1948-49 an investigation was made of the geology and hydrology of the X-10 area. The following description is based principally on information in the report[8] of this investigation.

(a) Topography and Geology. - Oak Ridge National Laboratory is located in Bethel Valley and covers an area about 1/2-mile long and 1/2-mile wide which comprises about 160 acres. Elevations in the plant area range from 780 to 900 ft above mean sea level. The Laboratory is bounded on the northwest by Chestnut Ridge, with elevations up to 1200 ft, and on the southeast by Haw Ridge, with elevations up to 1000 ft.

The entire plant area is underlain by rocks of the Chicamauga group of Ordovician age. In this area the thickness of the group is 1735 ft. The rocks are mainly limestone; however, variations in the types of rocks permit their separation into eight distinguishable and mappable subdivisions (Fig. 2.3.6).

The composite section of the Chicamauga group, in descending order of units, is summarized in Table 2.3.10.

The direction of dip of all the rocks in the X-10 area is toward the southeast, and the angle of dip is between 30 and 40 degrees. The average direction of their strike is north 58 degrees east.

The Chicamauga group is covered by a mantle of clayey soil derived from the decomposition of the underlying consolidated bedrock. The unconsolidated, weathered material ranges in thickness from about 1 to 25 ft, averaging perhaps 10 ft.

(b) Hydrology. - The area around the LITR is drained by White Oak Creek and its tributaries. Just south of the Laboratory, White Oak Creek flows out of Bethel Valley through a gap in Haw Ridge. Information on the discharge of White Oak Creek is given in Section 2.3.3.

Ground water in the rock beneath the LITR is derived from precipitation that falls on the area and its immediate surroundings, and it is constantly moving from points of recharge to points of discharge at lower

---

[8] P. B. Stockdale, Geologic Conditions at the Oak Ridge National Laboratory X-10 Area Relevant to the Disposal of Radioactive Waste, ORO-58 (Aug. 1, 1951).

ORNL DWG. 67-4998

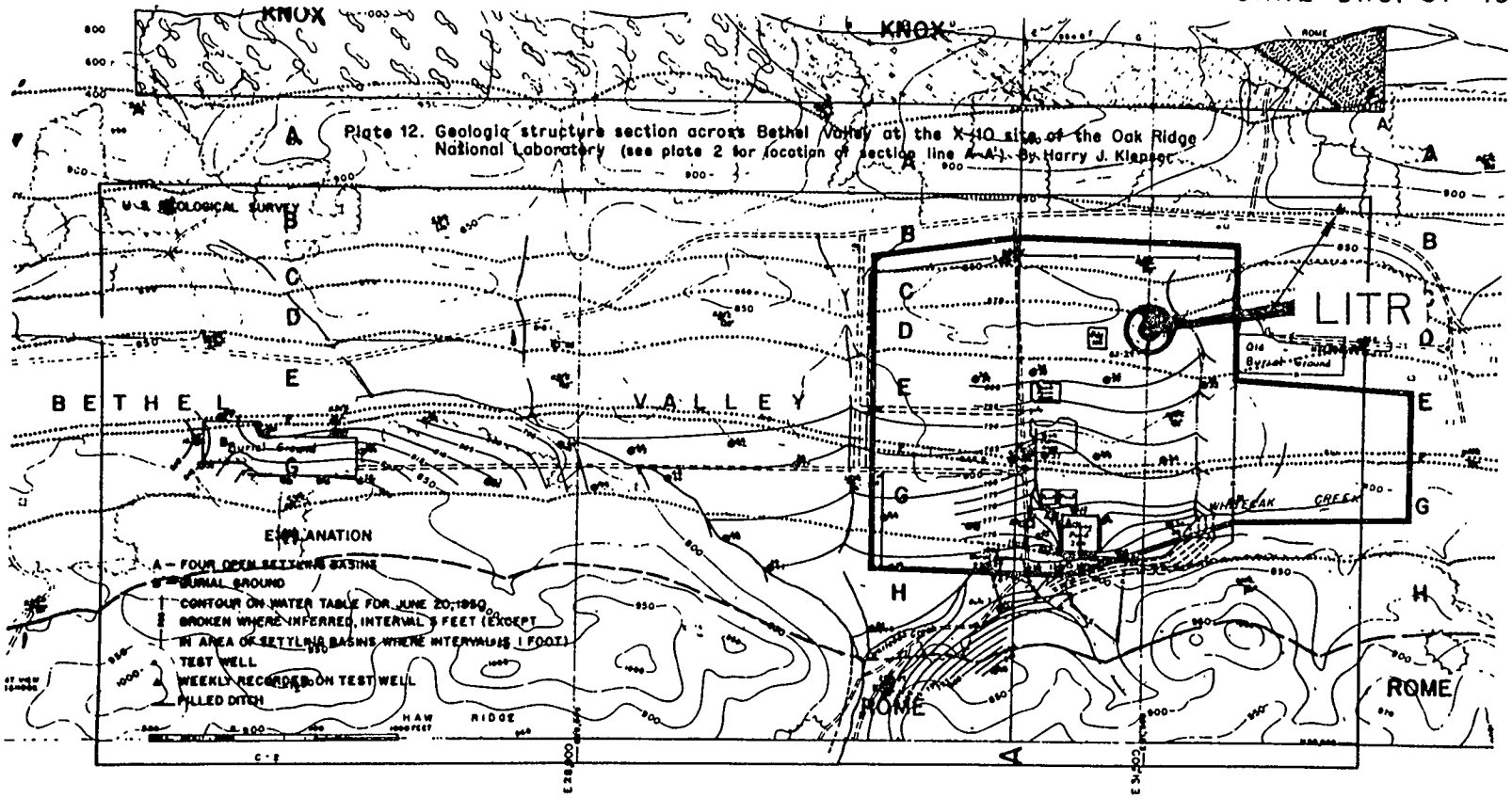

Fig. 2.3.6. Geological and Water Table Map of ORNL

Table 2.3.10. Composition of Chicamauga Formation at the LITR Site

Unit	Description of Rock	Thickness (ft)
H	Siltstone, calcareous, gray, olive maroon; with shaly partings and thin limestone lenses	85
	Limestone of varied types; gray, olive-gray buff, drab; mostly thin-bedded; with argillaceous partings; weathers to shaly appearance; with fossiliferous zones	180
	Limestone, argillaceous (calcareous siltstone), gray, olive-gray, pinkish maroon; even-bedded, with shale partings	35
Total		300
G	Limestone of various types, dark gray to brownish gray; mostly nodular with abundant black irregular clay partings; dense to medium grained; mostly thin-bedded, partly massive; with shale partings; weathers to a lighter colored shaly or nodular appearance; with some fossiliferous horizons; mostly covered in lowlands	300
F	Siltstone, calcareous, alternating with shale; olive-gray to maroon; even-bedded; laminated; weathers to a red shaly appearance; produces a slight rise in topography; a very distinctive unit	25
E	Limestone, mostly gray to drab, partly pinkish maroon, mottled; brittle, thin-bedded to massive; with shaly partings	60
	Limestone, similar to "G" above, mostly covered in lowlands	220
	Calcareous shale and argillaceous limestone, gray to buff; in alternating thin even beds; yielding small roundish slabs upon weathering, with yellow-buff color	45
	Limestone of various types, gray; most argillaceous and modular; in thin irregular beds with shale partings; abundant fossils	55
Total		380
D	Limestone and chert; limestone is gray to olive-gray in part nodular, shaly, and thin-bedded, in part massive; with abundant chert in thin, even bands, breaking into angular fragments upon weathering; produces a chain of low hills	160
C	Shale, calcareous, olive-gray to light maroon; fossil; evenly laminated	10
	Limestone of various types, gray; fine-to-coarse grained, partly crystalline, partly nodular; mostly massive; with occasional patches of chert; partly fossiliferous; "quarry beds"	105
Total		115
B	Siltstone, in even beds up to 2 ft thick, laminated, alternating with calcareous shale; olive-gray, buff, maroon; some limestone, nonresistant; more shale at base	215
A	Limestone of various types, dark gray to buff; with shale partings; with gray to black chert in nodules and lenses	80
	Chert, thin-bedded, with shaly partings	15
	Siltstone, calcareous, olive-gray to maroon; weathers to shaly appearance	30
	Siltstone and chert, in alternating beds; siltstone is calcareous, gray, olive, maroon; weathers to shaly appearance; with abundant granular chert in even beds up to 6 in. thick, breaking into angular blocks upon weathering	90
	Limestone; mostly covered	25
Total		240
Total thickness		1735

elevations. Thus ground-water discharge contributes to the base flow of the surface streams in the area and ultimately augments the flow of the Clinch River. Flow rates of the rivers fed by or affected by this flow are indicated in Table 2.3.11.

The limestones and shales of the Chicamauga group are quite impermeable and are incapable of rapidly transmitting large amounts of water. The openings in the rocks are confined to narrow seams developed along bedding planes or joints which decrease in size with depth. Below about 100 ft the rock is generally devoid of openings, so it is probable that most of the ground water in the area moves through the unconsolidated soils near the surface rather than the rock.

Table 2.3.11. Flows in Clinch, Emory, and Tennessee Rivers, 1945–1951[a]

Measured in cubic feet per second

	Clinch River						Emory River			Tennessee River					
	Miles 20.8 & 13.2			Mile 4.4[b]			Mile 12.8			Mile 529.9			Mile 465.3		
	Max.	Mean	Min.	Max.	Mean	Min.	Max.	Mean	Min.	Max.	Mean	Min.	Max.	Mean	Min.
January	22,900	8,960	1620	70,700	14,400	2120	50,000	4450	178	181,000	47,700	15,800	218,000	63,900	23,200
February	27,700	10,100	1230	88,800	15,800	2250	69,000	4550	468	204,000	50,800	17,900	195,000	67,900	19,700
March	12,700	5,850	690	26,700	9,450	1830	15,400	2910	507	100,000	32,400	13,300	148,000	44,200	19,500
April	8,540	3,400	306	13,300	5,620	752	6,600	1800	249	43,700	23,800	5,200	82,000	27,700	13,200
May	8,080	2,750	298	19,700	4,700	520	13,100	1610	58	38,300	20,000	3,000	95,900	28,800	17,900
June	7,420	2,820	224	9,280	3,320	262	5,300	396	14	32,100	18,900	8,200	32,800	25,500	18,900
July	7,630	2,930	259	12,800	3,400	281	9,230	360	21	87,500	19,600	6,500	106,000	26,400	15,400
August	8,390	4,520	374	8,760	4,800	378	3,060	177	4	37,600	21,400	9,900	43,300	28,100	17,800
September	8,450	4,620	341	13,000	4,940	462	5,500	224	2	39,900	22,200	6,900	54,400	30,100	17,100
October	9,200	5,130	150[c]	14,200	5,300	150[b]	5,040	93	1	67,100	23,500	9,800	72,800	29,700	16,300
November	12,700	4,430	453	40,500	5,830	556	27,800	1100	2	128,000	25,400	10,300	167,000	34,000	13,600
December	27,000	8,360	569	60,300	11,700	593	33,300	2720	24	112,000	41,000	11,800	139,000	53,600	21,100
October April[d]		6,600			9,730			2520			34,900			45,900	
May September[e]		3,530			4,230			553			20,400			27,800	

[a] *EGCR Hazards Summary Report*, ORO-586 (Oct. 10, 1962).
[b] Flows shown for Clinch River mile 4.4 include Emory River flows.
[c] By agreement with TVA, a flow of not less than 150 cfs has been maintained in the Clinch River at Oak Ridge since Aug. 28, 1943.
[d] Nonstratified flow period.
[e] Stratified flow period.

The depth to water in the LITR area ranges from 25 to 30 ft below land surface, at points of high elevations, to at or near land surface along the surface streams. Figure 2.3.6 shows the configuration of the water table on June 20, 1950.

Table 2.3.12 lists the community water systems in Tennessee downstream from ORNL which are supplied by intakes on the Clinch or Tennessee rivers or their tributaries.

Table 2.3.12. Community Water Systems in Tennessee Downstream from ORNL, Supplied by Intakes on the Clinch and Tennessee Rivers or Tributaries[a]

Community	Population	Intake Source Stream	Approximate Location	Remarks
ORGDP (K-25 area)	2,678[b]	Clinch River	CR mile 14	Industrial plant water system
Harriman	5,931[c]	Emory River	ER mile 12	Mouth of Emory River is at CR mile 4.4
Kingston Steam Plant (TVA)	500[d]	Clinch River	CR mile 4.4	
Kingston	2,000[d]	Tennessee River	TR mile 570	River used for supplementary supply
Watts Bar Dam (Resort village and TVA steam plant)	1,000[d]	Tennessee River	TR mile 530	
Dayton	3,500[c]	Richland Creek	RC mile 3	Opposite TR mile 505
Cleveland	16,196[c]	Hiwassee River	HR mile 15	Mouth of Hiwassee River is at TR mile 500
Soddy	2,000[d]	Tennessee River	TR mile 488	
Chattanooga	130,009[c]	Tennessee River	TR mile 465	Metropolitan area served by City Water Company
South Pittsburg	4,130[c]	Tennessee River	TR mile 435	
Total	168,061			

[a] *EGCR Hazards Summary Report*, ORO-586, Oct. 10, 1962.

[b] Based on May 1963 data.

[c] 1960 Report of U. S. Bureau of the Census.

[d] Based on published 1957 estimates.

2.3.5. Seismology

Information on the frequency and severity of earthquakes in the East Tennessee area is reported in the ART Hazards Summary Report.[9] Earthquake forces generally have not been considered important enough to be considered in the design of facilities either at ORNL or by the Tennessee Valley Authority (TVA) in this region. The Oak Ridge area is currently classified by the U. S. Coast and Geodetic Survey as subject to earthquakes of intensity 6, measured on the Modified Mercalli Intensity Scale.

Both Lynch[10] of the Fordham University Physics Department and Moneymaker[11] of TVA indicate that such earthquakes as occasionally occur in the East Tennessee area are quite common to the rest of the world and are not indicative of undue seismic activity.

An average of one or two earthquakes a year occurs in the Appalachian Valley from Chattanooga, Tennessee, to Virginia according to TVA records. The maximum intensity of any shock recorded is 6 on the Woods-Neumann Scale. A quake of this magnitude was experienced in the Oak Ridge area on September 7, 1956, and was barely noticeable by either ambulatory or stationary individuals. Structures were completely unaffected. Disturbances of this type are to be expected only once every few years in the Oak Ridge area.

The Fordham University records indicate a quake frequency below that of TVA. However, the magnitude of the observed quakes is approximately the same. Lynch indicates that "it is highly improbable that a major shock will be felt in the area (Tennessee) for several thousand years to come."

---

[9] W. B. Cottrell, et al, Aircraft Reactor Test Hazards Summary Report, USAEC Rpt. ORNL-1835, pp 78-79 (January 1955).

[10] Letter from J. Lynch to M. Mann, Nov. 3, 1948, quoted in a report on the Safety Aspects of the Homogeneous Reactor Experiment, USAEC Rpt. ORNL-731 (Aug. 29, 1950).

[11] B. C. Moneymaker to W. B. Cottrell, private communication (Oct. 27, 1952).

3. BUILDING

3.1. Introduction

When operation of the LITR first started, the only enclosure was a small tile and brick building adjacent to the north side of the reactor shield. This building contained two rooms which served as the reactor control room and auxiliary control room. Additional enclosures were provided as the need arose until the present well-sealed composite building resulted. These additional enclosures were provided in the following order: Stage 1--The east and west experiment laboratories were built to house the beam-hole accesses and experiments, and the top working level (present third floor) was enclosed to protect reactor electrical components. Stage 2--The space between the top working floor and the ground-floor laboratories (present second floor) was enclosed to protect experimental equipment. (For some time this space remained unenclosed and was referred to as the "bare midriff". It is still frequently referred to as the "midriff" in reports.) Stage 3--The truck loading area and the loading well from the third floor to the ground floor were enclosed for containment purposes. Stage 3 also included the provision of air locks for all entrances to the third floor (top level).

Other enclosures include a small covered concrete-block shield built around the demineralizer columns and two small sheet-metal rain-proof housings for the coolant pump motors. However, these are too small to be classed as buildings.

Figure 3.1.1 is a photograph of the south side of the LITR building. A general description of the present building follows.

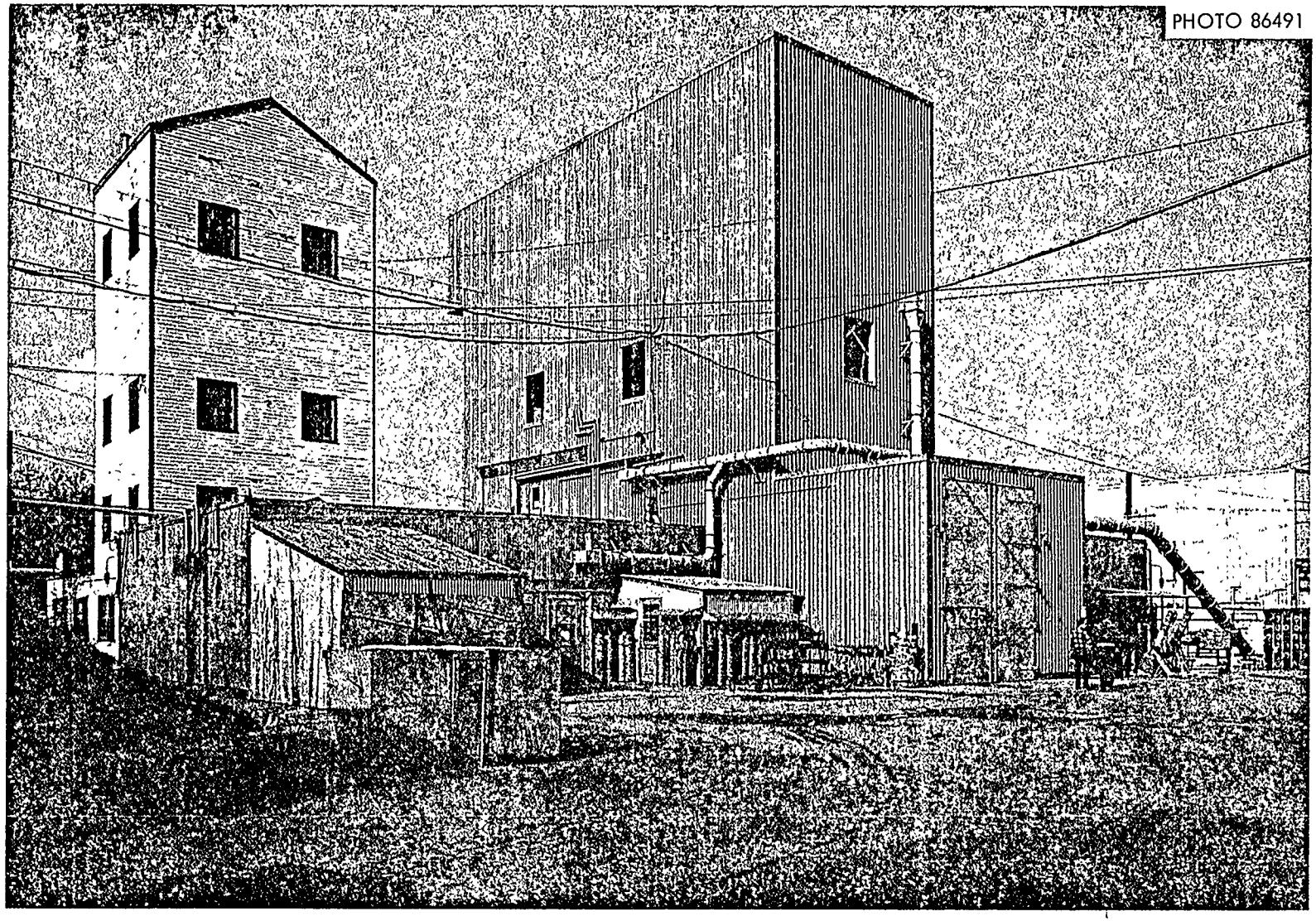

Fig. 3.1.1. South Side of the LITR Building

3.2. Reactor Building

3.2.1. First Floor

The first floor consists of the control room, the east and west experiment laboratories, and the truck-loading area.

The original control console for the reactor was located in the southernmost of the two control rooms; this was replaced with a vertical control panel in the northernmost room during the recent upgrading of the reactor instrumentation. The floor plan of the control rooms is shown in Fig. 3.2.1. Figure 3.2.2 is a photograph of the control rooms. The east, west, and north walls of the control room are built of brick and tile; the south wall is the north face of the reactor shield. The floor is of poured concrete covered with vinyl-asbestos tile. The roof is flat and of built-up construction. The floor area of the northernmost room is 18 ft 10 in. x 14 ft 4 in., and that of the south room is 16 ft 7 in. x 17 ft 5 in.

The east and west experiment laboratories are built of insulated, corrugated sheet-steel siding with flat built-up roofs supported on ribbed sheet-steel. The floors are poured concrete. These rooms contain the access ports of the horizontal beam holes (HB-1, HB-2, and HB-3 in the east room and HB-4, HB-5, and HB-6 in the west room) and the experimental equipment associated with them. Also, both the east and west rooms house control and monitoring instrumentation associated with experiment rigs located within the reactor tank. The inside floor area of the east room is 60 ft x 28 ft 8 in.; that of the west room is 32 x 43 ft. The ceiling height of both the east and west rooms is 13 ft 2 in. Views of the east and west rooms are shown in Figs. 3.2.3 and 3.2.4, respectively. A 3-ton monorail in the east room and a 2-ton monorail in the west room are provided for servicing beam holes.

The enclosed truck-loading area adjacent to the south face of the reactor shield was built to allow transfer shields to be lowered through a hatch in the third floor (top level) to a truck bed on the first-floor level without opening the top level to the atmosphere. This enclosure was done as part of the third stage of the building alterations. It

ORNL DWG. 65-1906 R

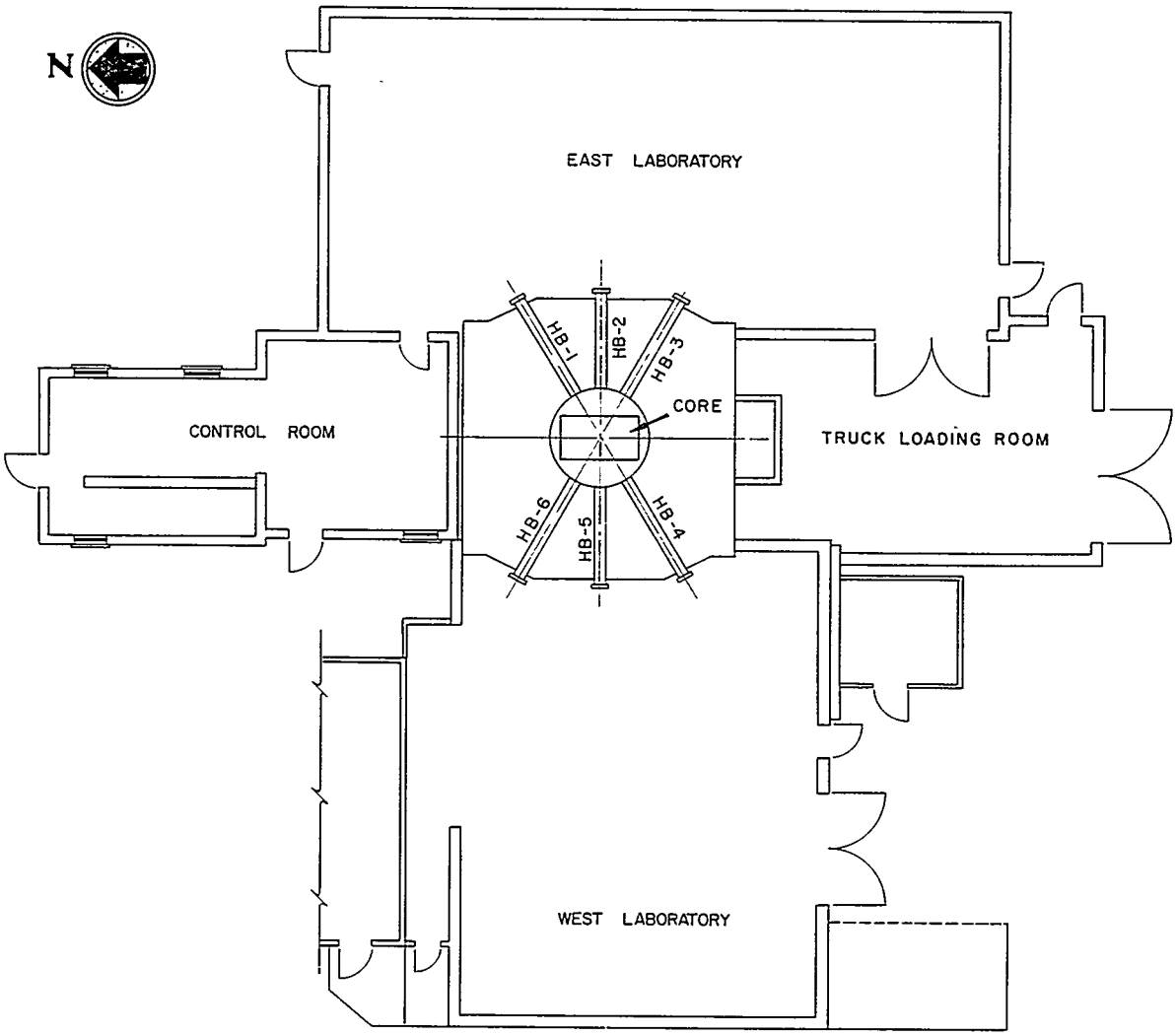

FIRST LEVEL

Fig. 3.2.1. LITR Floor Plan, First Level

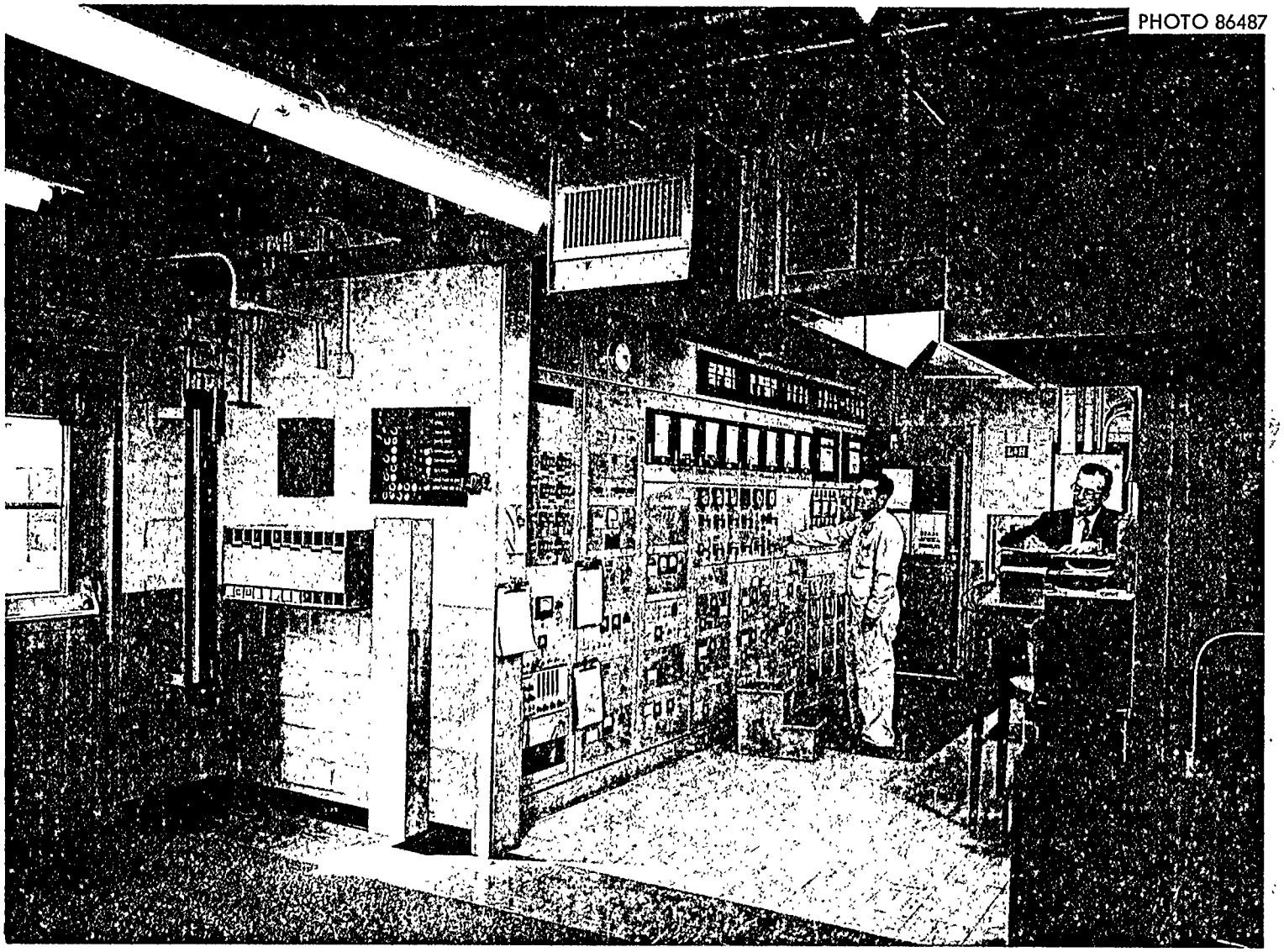

Fig. 3.2.2. LITR Control Room (Local)

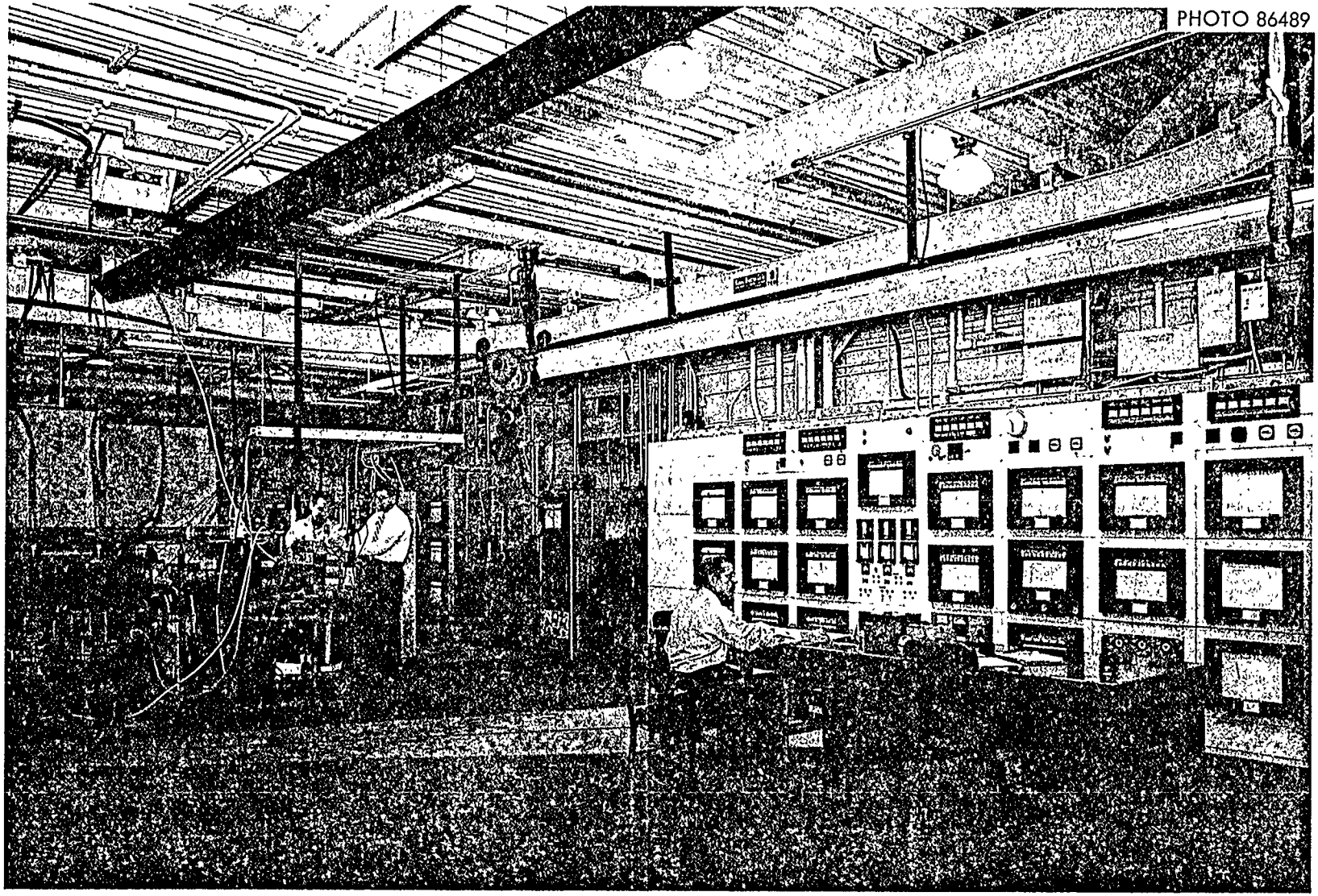

Fig. 3.2.3. View of LITR East Room

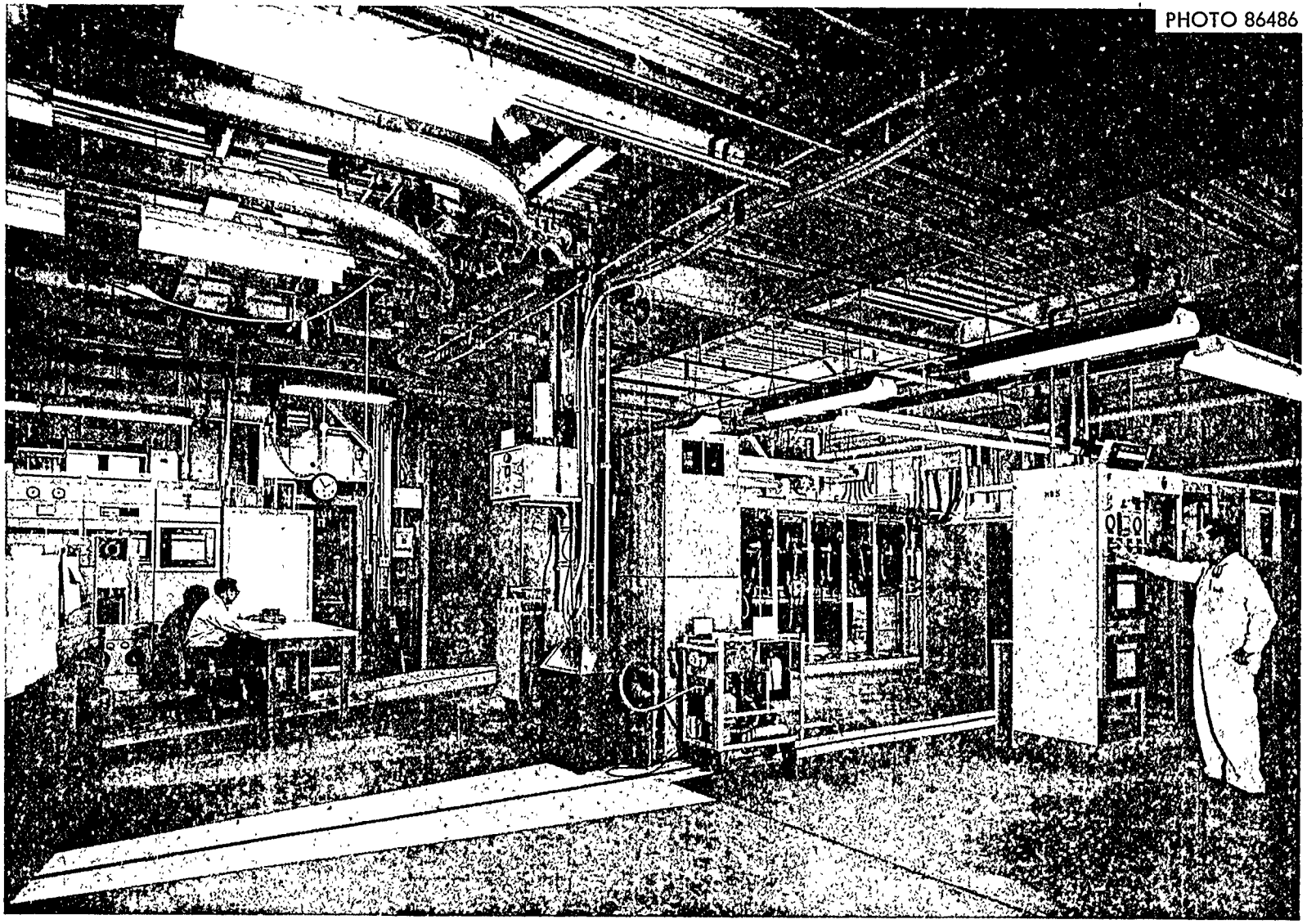

Fig. 3.2.4. View of LITR West Room

required extending the third floor 16 ft 6 in. southward and providing an enclosed loading well down to the first-floor level where an enclosed truck-loading area was built. The walls of this extension are of insulated corrugated sheet steel of the same type which encloses the east and west laboratories. Large swinging doors provide a truck entrance 11 ft 9 1/4 in. x 15 ft 10 1/2 in. in the south wall of the enclosure. The enclosed loading area is 28 ft 10 in. x 20 ft. Figure 3.2.5 is a photograph of the truck-loading room as seen through the loading well from the third floor.

3.2.2. Second Floor

The enclosed portion of the second floor level (Fig. 3.2.6) is relatively small, containing only about 690 sq ft. The reactor coolant inlet and outlet pipes pass through this room; and, although the pipes are shielded, the radiation level is still too high for continuous personnel occupancy. The room accommodates some experimental and reactor control equipment which does not require continuous manning and is the service room for the reactor shim-rod electromagnets which hang into the room at the north end when the top plug is in its storage rack. The access openings to the low-flux experiment facilities, V-1, V-2, V-3, and V-4, are in this room. The walls of the room are of uninsulated corrugated sheet steel. The floor is irregular, consisting partly of ledges of the reactor shielding and partly of wooden flooring laid upon a portion of the room of the control room. Figure 3.2.7 is a photograph of this room, looking southward toward the reactor shield.

3.2.3. Third Floor

The third floor (top level) enclosure is a single room 20 ft x 56 ft 6 in. with a ceiling height of 32 ft 9 in. (see Figs. 3.2.6 and 3.2.8). This room serves primarily as the service area for the reactor and accommodates a traveling 10-ton hoist used to remove and install the reactor top plug and to handle experiment-rig and reactor-fuel transfer shields. The walls of the room are uninsulated, corrugated sheet steel. The floor consists of wood two-by-sixes laid on steel framing and covered with 3/8-in. plywood which, in turn, is covered with vinyl-asbestos tile. Since

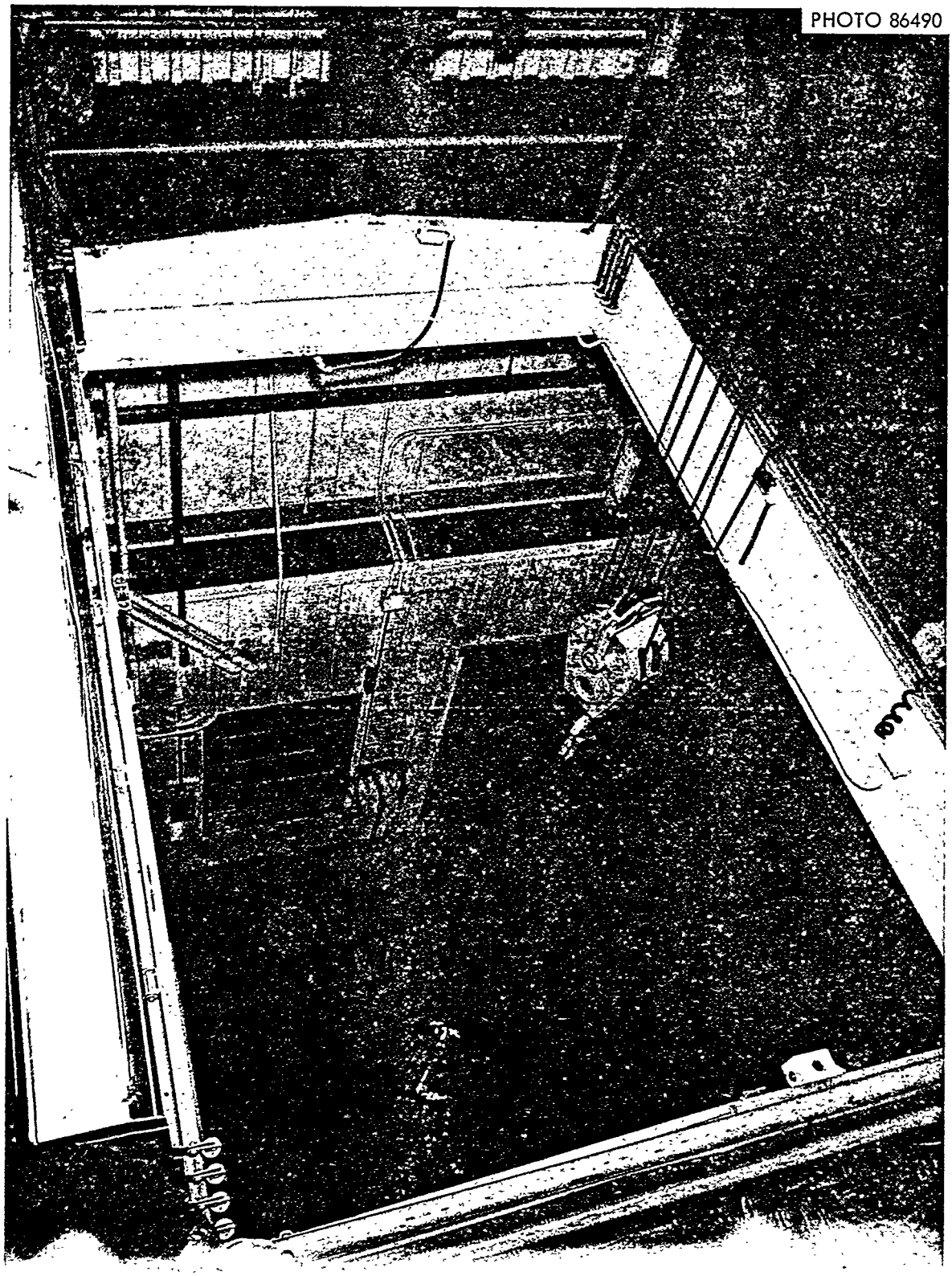

Fig. 3.2.5. View of LITR Truck-Loading Room

ORNL DWG. 65-1907R

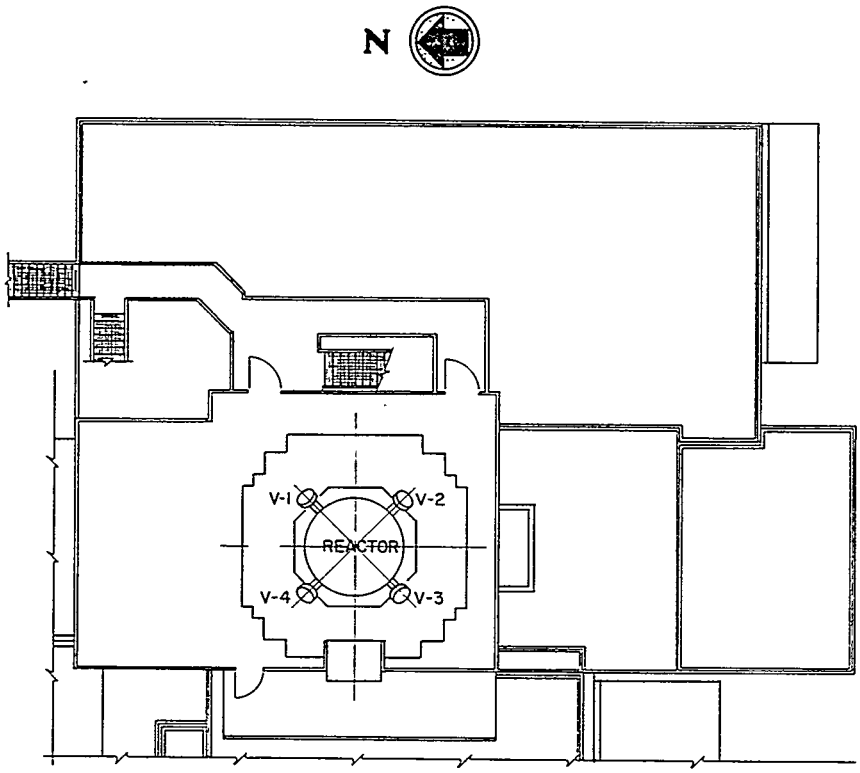

SECOND LEVEL

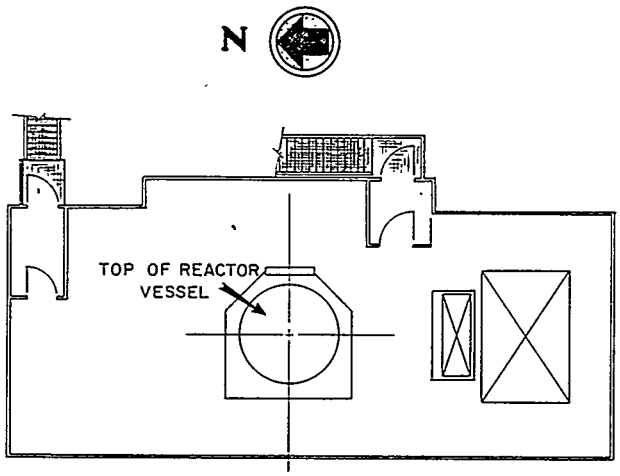

THIRD LEVEL

Fig. 3.2.6. LITR Floor Plan, Second and Third Levels

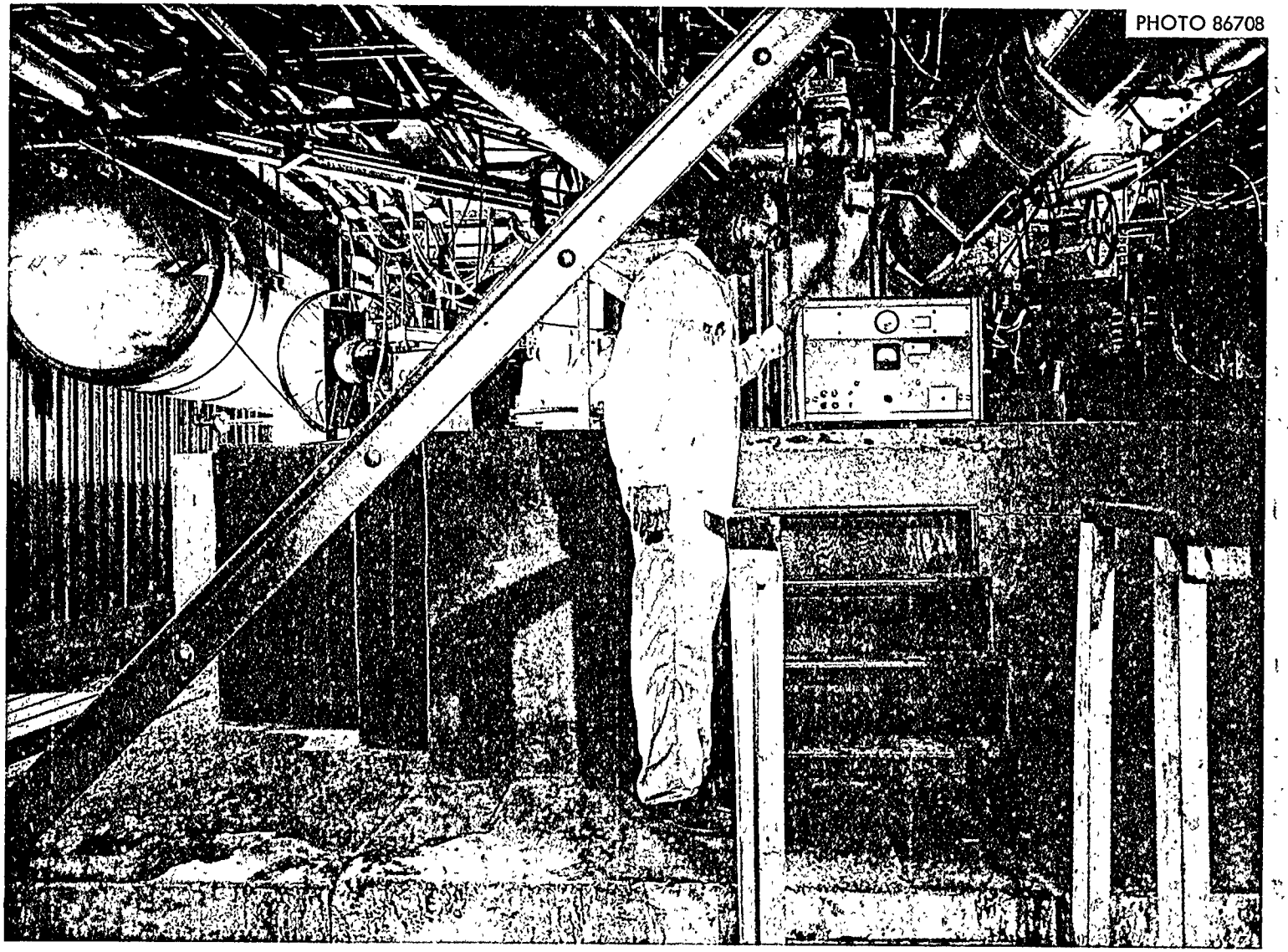

Fig. 3.2.7. View of LITR Second-Floor Enclosure

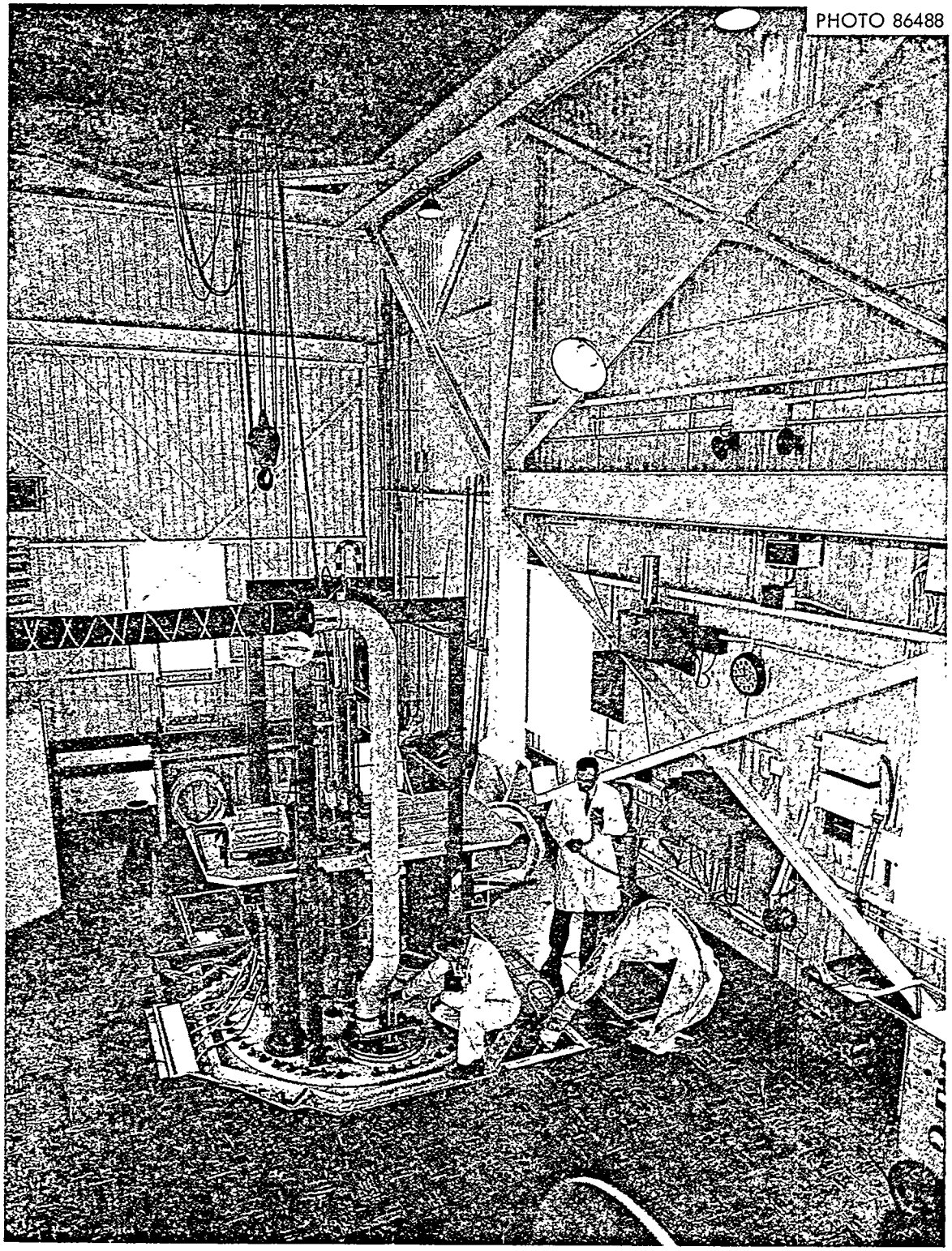

Fig. 3.2.8. View of LITR Third Floor

heavy transfer shields must occasionally be set on the floor, the areas over steel support framing are designated by tiles of a different color from the rest of the floor. The roof is of the built-up type laid on ribbed sheet steel. The storage rack for the reactor top plug is built into the floor at the north end of the room, and a hatch through the floor at the south end provides access to the truck-loading area. All entrances to the third-floor room are air-locked.

3.3. Heating and Air Conditioning

The first-floor experiment rooms are heated by steam radiators. The second- and third-floor rooms are heated by steam coils in space heaters equipped with blowers. A steam coil in the control-room air conditioner supplies heat as needed.

Separate air conditioners are provided for the east experiment room, the west experiment room, the control room, and the third floor. The control-room air conditioner has a 10% fresh-air makeup; but, due to containment requirements, the others are recirculating systems only.

4. CONTAINMENT, CELL VENTILATION, AND OFF-GAS

4.1. Introduction

The LITR containment, ventilation, and air-conditioning systems have been designed to minimize the spread of contamination and radioactive gases into the area surrounding the reactor building in the event of an accidental release of radioactivity. Three separate systems are used for the decontamination and disposal of potentially radioactive gases: the normal off-gas system (NOG), the pressurizable off-gas system (POG), and the cell-ventilation system. The two off-gas systems are used to handle the routine low-volume disposal of gaseous wastes from experiments and from the reactor. Although the off-gas systems are not specifically a part of the building containment system, they are somewhat related and are described in this section to aid in the overall understanding of the air-handling systems.

The off-gas systems are designed to handle routine releases of high-concentration radioactive gases and are connected directly to the sources of those effluents. The pressurizable off-gas system services equipment which may become pressurized, and the normal off-gas system services only equipment which may not become pressurized.

The cell-ventilation system exhausts air from areas which contain potential sources of radioactive gases. These areas include the third floor, second floor, east experiment room, and west experiment room.

4.2. Containment

At the LITR, dynamic containment similar to that used at other ORNL reactors (ORR, HFIR, and BSR) is used to prevent the escape of radioactive gases to the atmosphere.[9] The building is sufficiently well sealed to ensure a negative pressure with respect to the atmosphere while the ventilation system is operating. A minimum air flow of 1400 cfm (with the BSF

---

[9] F. T. Binford and T. H. J. Burnett, A Method for the Disposal of Volatile Fission Products from an Accident in the ORR, ORNL-2086 (Aug. 2, 1956).

in containment) is drawn from the building by the area cell-ventilation system which is separately ducted to the third floor, the second floor, the east experiment room, and the west experiment room. Normally, when the BSF is not in containment, the flow from the building is 3000 cfm. Control dampers in the exhaust ducts allow the flow from any room to be increased or decreased as required. The flow rate from the east and west experiment rooms is automatically doubled if their air monitors detect a high level of airborne radioactive contamination.

Access to the third-floor room is through two personnel entrances and the truck-loading hatch, all three of which are provided with airlocks since the reactor is open to this room during servicing. Entrances to the other rooms are not provided with airlocks since the amount of airborne radioactive contamination which can be released into them is small.

4.3. Cell-Ventilation System

The BSR and LITR cell-ventilation systems are common after the underground joint at a point east of Building 3042, ORR, (see Fig. 4.3.1). Normally, the flow through the LITR portion of the common system is 3000 ft^3 of air per minute; however, if the BSR emergency containment system is activated, an automatic valve in the LITR line partially closes to reduce the flow from the LITR to 1400 cfm. Operation of the LITR emergency containment system has no effect on the BSR cell-ventilation system. As shown in the sketch, the main underground line from the LITR is an 18-in. epoxy-lined, asbestos pipe that connects to the 24-in. pipe of the same type coming from the BSR.

Before being discharged to the atmosphere through the 250-ft high 3039 Stack, the air exhausted from the LITR and BSR is filtered to remove airborne particles and radioiodine. The system consists of three parallel filter banks in which particle and iodine filters are arranged in series. The filters are housed in sealed concrete cells. Each filter bank consists of (in the direction of flow) a prefilter, an iodine filter, an absolute particle filter, a second iodine filter, and a second absolute particle filter. Following is a description of each type of filter.

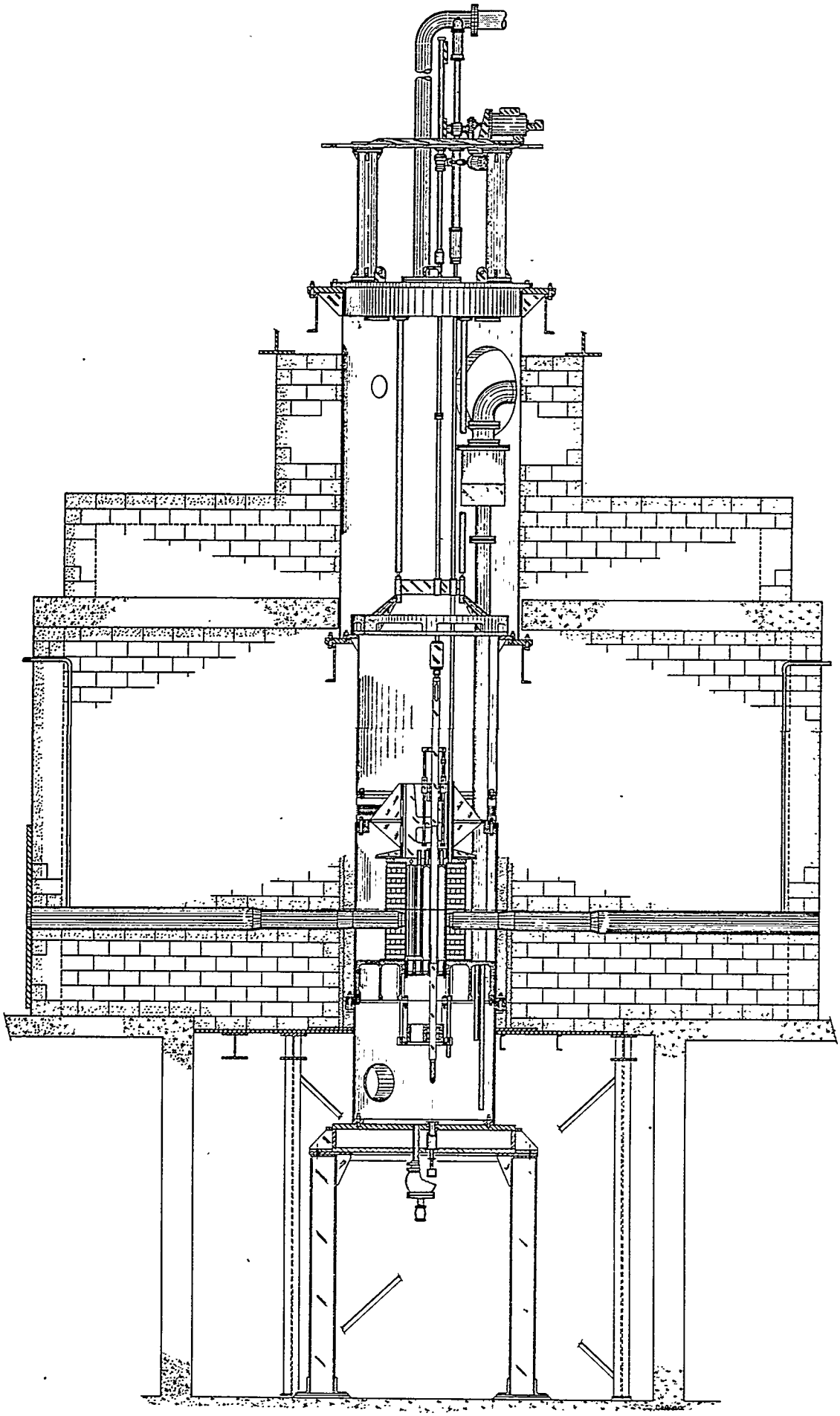

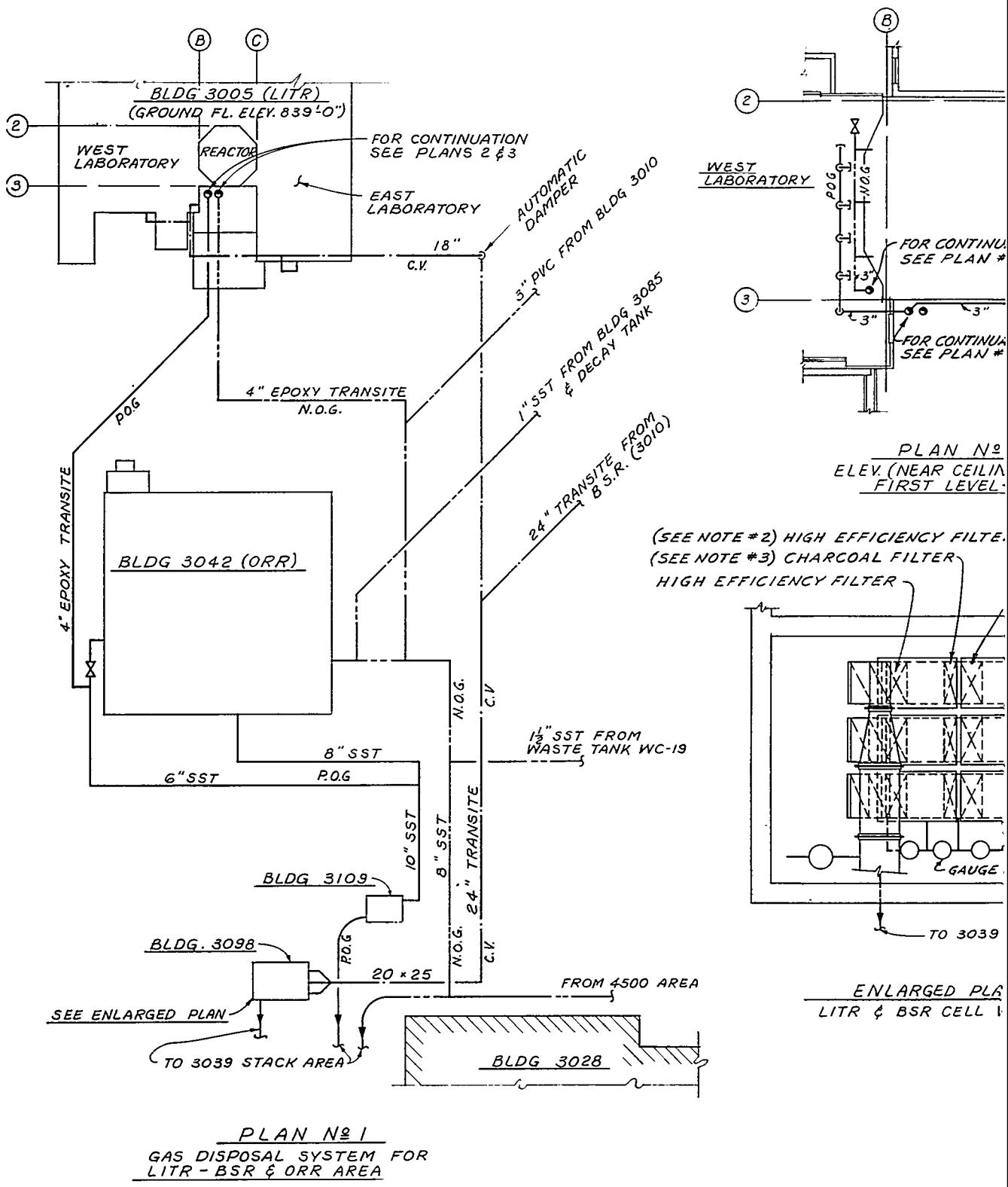

Fig. 4.3.1. LITR Gaseous Waste Di

ORNL DWG. 67-4999

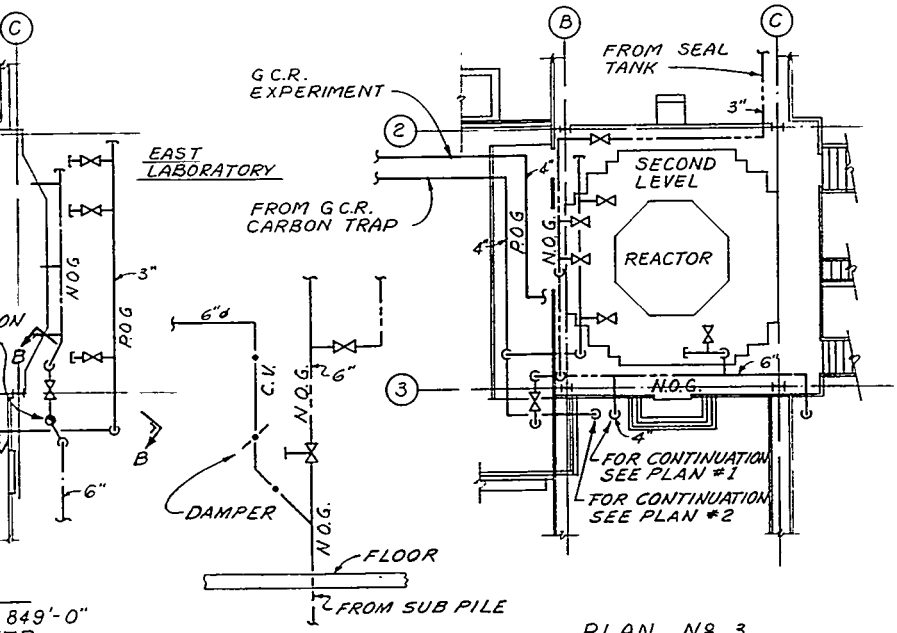

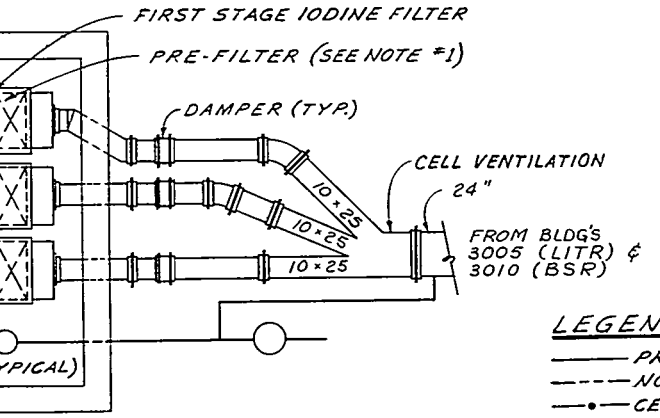

OF BLDG 3098
NTILATION FILTERS

LEGEND

——— PRESSURIZABLE OFF GAS (POG)
– – – NORMAL OFF GAS (NOG)
—•— CELL VENTILATION SYSTEM (CV)

NOTES

1. PRE-FILTER (MSA B-2000) O.R.N.L. STORES #07-644-6990
2. HIGH EFFICIENCY FILTER O.R.N.L. STORES #07-644-0512
3. CHARCOAL FILTER (MSA-CU-SM-85240)

posal Systems

Prefilters. - These consist of two filter elements each in metal frames whose overall dimensions are 24 x 24 x 14 in. deep. Each filter element has a capacity of 2000 scfm with an initial pressure drop of 0.41 in. of H_2O and an efficiency of 90% (NBS spot test) when loaded with approximately 700 g of NBS Cottrell Precipitate (no linters). The Fiberglas filter media is held between layers of scrim cloth and inserted into a rigid asbestos frame. The filter enclosure is galvanized steel with 1/4-in. closed-pore, soft neoprene, dove-tail gaskets on both flange faces. The filter units are designated as Mine Safety Appliance Company, Dustfoe B-2000, or an approved equal.

First-Stage Iodine Filters. - The iodine filtering medium is flexible, knitted metallic mesh made of 32-gage silver-plated copper wire flattened to size, 18 x 2 mils. The knitted mesh forms a 2-in.-thick filter which is supported by a rigid frame 2 ft wide by 4 ft tall constructed of type 347 stainless steel. The weight of the media for one complete assembly is 32 lb.

Absolute Filters. - Each of the two absolute particle filters consists of two filter units which measure 24 x 24 x 17 1/2 in. deep and have a capacity of 1000 cfm. These absolute filters are the standard pleated Fiberglas type with aluminum separators available from ORNL stores under stock No. 07-644-0512. These filters remove 99.95% of particles 0.3 microns in diameter or larger.

Charcoal Iodine Filters. - Each assembly consists of two units having dimensions of 24 x 24 x 9 in. and an initial capacity of 1000 cfm with a pressure drop of 0.25 in. of H_2O. Each filter element is a pleated, perforated steel enclosure containing not less than 45 lb of activated, high-purity, coconut-shell charcoal in a uniform bed thickness of not less than 3/4 in. The charcoal is thoroughly compacted to prevent further settling during use. The filter flanges are seated in the support frames on 1/4-in.-thick, closed-cell, soft neoprene, dovetailed gaskets. The filter assemblies are specified as Mine Safety Appliance Company model CO-SM-85240 or equal.

The suction fans for the LITR-BSR cell-ventilation system are the same ones used for other Laboratory cell-ventilation systems and are located in the 3039 Stack area. (See Fig. 4.3.2, in which the fans are labeled electric fan for cell ventilation.) Operation of the fans is the responsibility of the Laboratory Facilities Department which is also in the Operations Division. Normally, the two electrically driven blowers are in operation--one producing a flow rate of 60,000 cfm and the other 40,000 cfm. As an emergency backup for the normal fans, there is a steam-powered fan with a capacity of 60,000 cfm. A steam turbine drives this emergency fan and the turbine is kept hot by a small, continuous flow of steam so that the emergency system can be in full operation 30 sec after the signal to start. The emergency system is started automatically when flow stops in the discharge duct of either fan or when the negative pressure in the suction duct of the system is lost. Two parallel steam supply lines are provided for the emergency turbine--one is opened by an automatic air-operated valve, the other by an automatic steam-operated valve. When the steam fan is started, automatic dampers that close when the ΔP is in the proper direction isolate the electrically-powered fans, and other automatic dampers open to put the steam-powered fan on the line.

4.4. Off-Gas Systems

4.4.1. Normal Off-Gas (NOG)

A flow diagram of the NOG is shown in Figs. 4.3.1 and 4.3.2. This same off-gas system services the ORR and various laboratories and hot cells in the area. The 4-in. epoxy-lined Transite NOG duct from the LITR ties into the 8-in. stainless-steel underground duct from the ORR near the southeast corner of Building 3042. The 8-in. line from the ORR connects into the common off-gas system in the 3039 Stack area. The gas decontamination equipment for the system consists of a continuously operating recirculating scrubber which uses 1% NaOH solution for iodine removal and a particle-filtering system consisting of a roughing prefilter, an absolute filter, and, downstream from the scrubber, a washable stainless steel particle filter.

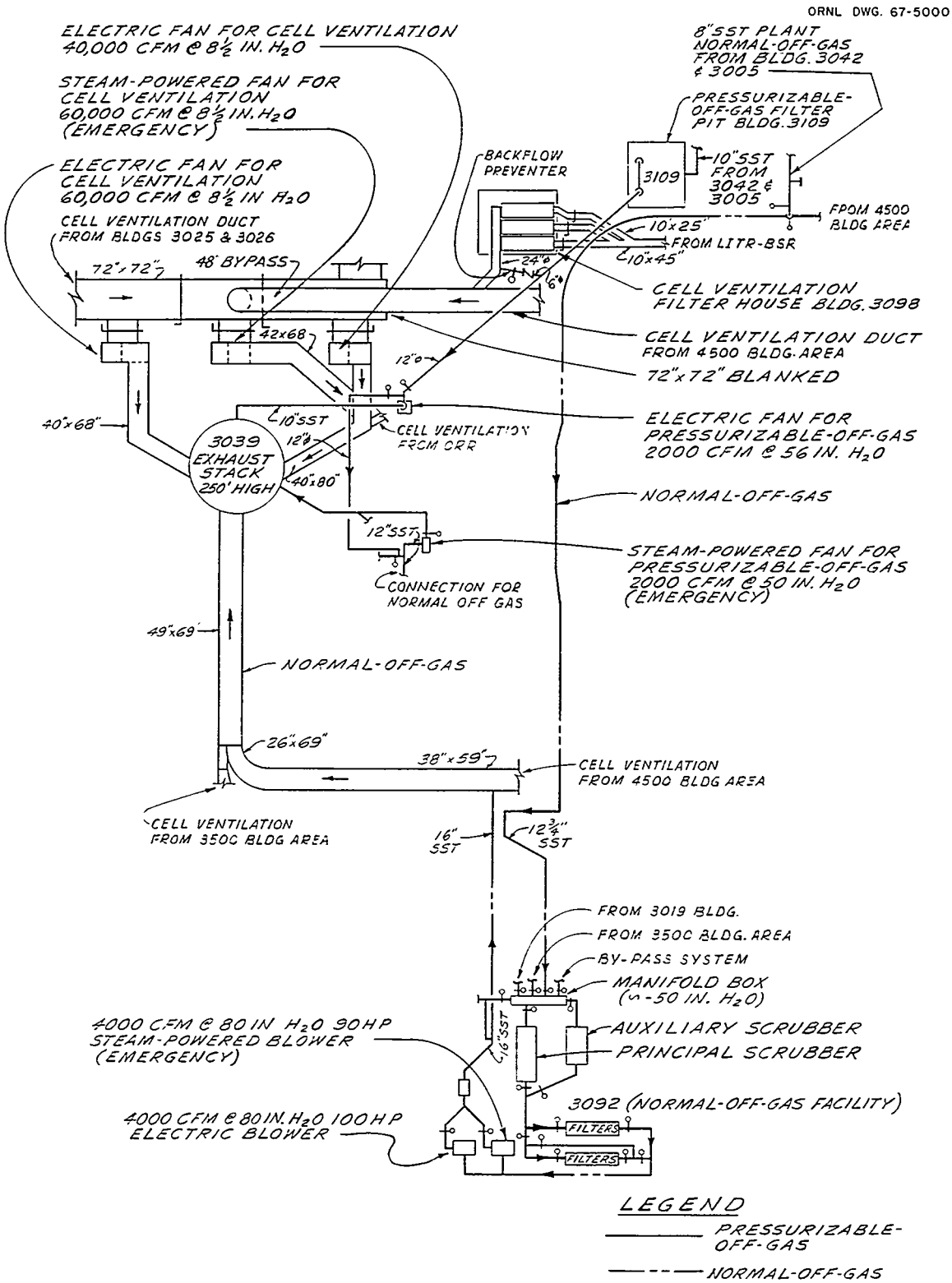

Fig. 4.3.2. Flow Diagram of Gaseous Waste Disposal Systems in the Stack Area

Normally, suction is supplied for the system by electrically driven, positive-displacement blowers. In the event of an electrical power outage or malfunction of the electrically operated blowers, an auxiliary steam-turbine powered blower is started automatically due to loss of negative pressure to provide continuity of operation.

Instrumentation for the system is located in the Building 3105 control room and includes monitors of the blower status, flow, pressure, pressure drop across the filters and scrubber, and the radiation level of the effluent gas. The system is operated and maintained by the Laboratory Facilities Department of the Operations Division.

Since the NOG is exhausted by positive-displacement blowers which form a seal when shut down, it is undesirable to vent high-pressure and/or high-volume-flow radioactive gas sources into it since a positive pressure within the system would cause a backflow into the several buildings which use it. At the LITR, use of the NOG is confined to venting the top of the seal tank, the reactor shielding enclosure, the beam-hole liners, experiment equipment hoods, and other similar types of equipment which cannot generate a high positive pressure. Normally, the negative pressure in the LITR NOG system is maintained at a negative pressure greater than 18 in. of H_2O. If the negative pressure falls to 6 in. of H_2O, an automatic setback of the reactor power occurs.

4.4.2. Pressurizable Off-Gas (POG)

The pressurizable off-gas system services both the LITR and ORR. A flow diagram of the system is shown in Figs. 4.3.1 and 4.3.2. It was specifically designed and built to vent pressurized sources of radioactive waste gases at the reactors, such as air-cooled experiment rigs. All inlets to this system are kept sealed when not in use to prevent the escape of radioactive gases if the system should become pressurized. The capacity of the total system is approximately 500 cfm with a negative pressure of 40 in. of H_2O being maintained in the main duct.

An underground 4-in.-diam epoxy-lined Transite pipe from the LITR connects into the 6-in.-diam stainless-steel POG line from the west side of the ORR. This 6-in. line runs southward to a 10-in. header which ties

directly into the concrete POG filter cell just north of the 3039 Stack area. The filter arrangement, shown in Fig. 4.4.1, consists of two banks of particle and iodine filters which can be operated singly, in parallel, or in series. Normally, one bank is in use with the other in standby. Each filter bank has (in the direction of flow) a rough particle filter, a cannister-type charcoal iodine filter, and an absolute particle filter. The individual filter types are as follows:

Roughing Filter. - A high-velocity filter made by the Farr Company, type A4A4, is used as the roughing filter. It measures 20 x 25 x 4 in. and contains stainless-steel filter media in a stainless steel frame. At a flow of 1500 cfm, the initial pressure drop across the unit is 0.24 in. of H_2O.

Iodine Filter. - Dorex, type ABH, cannister-type filters are used for iodine removal. The individual cannisters, activated carbon-filled, stainless-steel cylinders consist of an inner and an outer perforated shell. The annular space between the inner and outer shells, 3/4-in. thick, is completely filled with high-activity, granular-type carbon. A total of 60 units is mounted on a vertical steel plate. At the rated flow of 1500 cfm, the initial pressure drop of the unit is 0.16 in. H_2O. The measured efficiency for removal of radioactive iodine is 98%.

Absolute Filters. - Each absolute filter section is made up of two standard pleated 24 x 24 x 11 3/4-in. units mounted one above the other. These are specified as Cambridge model 1G-1000-1 or equal. The initial pressure drop is 0.7 in. H_2O at 750 cfm, and the specified efficiency is 99.95%, or better, for particles 0.3 micron in diameter or larger.

Each filter cell contains trapped drains which allow condensate or entrained water to drain to the liquid-waste disposal system.

The POG filters are monitored for pressure drop changes and a pressure monitor in the duct at the LITR causes a reactor power setback if the negative pressure is lost. Iodine-removal and particle-removal efficiency tests are made semiannually. The minimum acceptable iodine-removal efficiency is 99.90%, and the minimum particle-removable efficiency is 99.95%.

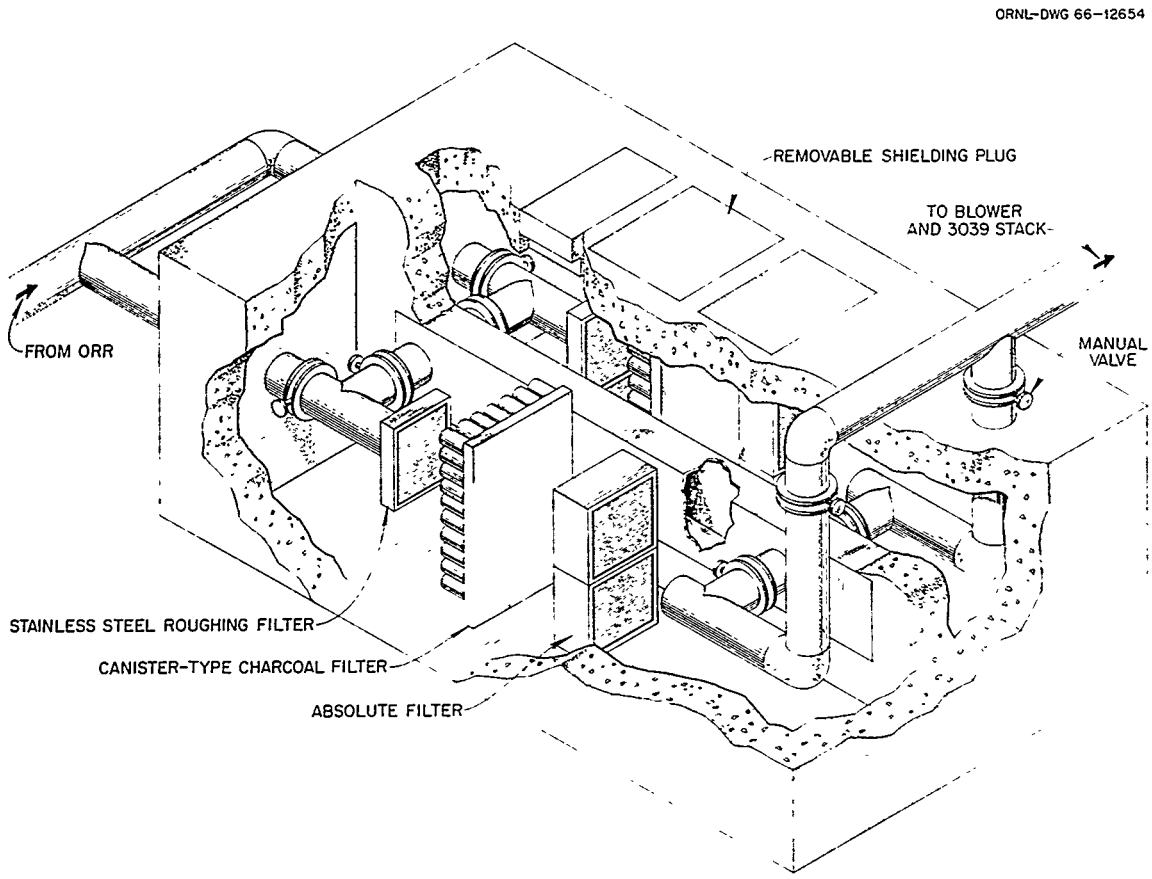

Fig. 4.4.1. Filter Arrangement for the Pressurizable Off-Gas System (POG)

The filter cells are connected by a 12-in.-diam stainless-steel duct to a 2000 cfm electrically driven centrifugal blower in the 3039 Stack area. Since the air flow through the POG system is usually less than 500 cfm, additional air to keep the blower cooled is drawn from a 6-in.-diam connection to the cell-ventilation duct which ties into the POG duct ahead of the blower (see Fig. 4.3.2). This additional flow is regulated with a throttling valve, and a check valve prevents back flow from the POG system to the cell-ventilation system. In the event of an electrical power failure or reduction of the negative pressure in the POG duct to less than 45 in. of H_2O, a steam-turbine-driven 2000-cfm, emergency blower is automatically started (see Fig. 4.3.2). Both blowers discharge into the 250-ft-high 3039 Stack.

The POG system is instrumented both locally and at the filter and blower locations to detect radiation and pressure changes so that abnormal conditions in the system can be quickly discovered and corrected. Loss of negative pressure in the POG system at the LITR is detected by a sensor located on the 4-in., stainless-steel header in the truck-loading area. If the negative pressure decreases to -25 in. of H_2O, an alarm is automatically sounded in the local and remote control rooms. At -15 in. of H_2O, an automatic setback of the reactor power results.

Also, a pressure transmitter connected to the inlet line at the filter cell sends a signal to a pressure recorder located on a panel in the LITR remote control room at the ORR. Differential-pressure instrumentation used to measure the pressure drop across individual filters is located at the filter cell. It consists of two pressure gauges with four copper tubes connected to each gauge. The sampling points for these tubes are in each of the four filter compartments. By proper valving at the pressure gauge enclosure, located at the filter pit, the pressure drop across the absolute filter, the charcoal cannister assembly, the roughing filter, or any combination of these can be obtained.

A Reuter-Stokes gamma chamber located near the pressure sensor is used to monitor the radiation from the header. A reading as high as 1250 counts/min will cause an alarm to sound in both the local and remote control rooms. Normally, this reading is about 100 counts/min.

An ionization chamber, located on the exit line from the filter pit, monitors the radioactivity level of the total POG effluent. The signal is transmitted to the pressurizable off-gas electrometer located in the remote control room and to the POG radiation recorder located on a panel also in the ORR control room. An alarm is actuated by a signal indicating twice the normal radiation background. Readout and alarm signals from the POG radioactivity monitor are also fed to instruments in the 3039 Stack area monitor room in Building 3105.

5. REACTOR COMPONENTS AND EXPERIMENT FACILITIES

5.1. Introduction

The center line of the core of the LITR is located at a depth of 20 ft 8 in. within a cylindrical tank which is 26 ft 9 13/16 in. tall and is 4 ft 6 1/4 in. ID at the core elevation. The reactor is fueled with aluminum plate-type fuel elements which contain uranium-aluminum alloy in which the uranium is enriched to 93% in ^{235}U. The core is light-water moderated, light-water cooled, and beryllium reflected.

Except for the instrumentation, coolant system, and shielding, the LITR was built of parts used in the hydraulic mock-up of the MTR, in criticality-testing assemblies, or in control-rod test stands required in the MTR development program at ORNL. In many respects it resembles the MTR but is limited in power level due to lack of forced cooling in the permanent reflector.

Although the LITR was a full-size duplicate of the MTR, the materials used were not all "reactor-grade". The core and reflector support castings, the fuel and shim-safety rod bearing grids, beam-hole thimbles, and the reactor tank section in which the core is located were all made of aluminum, as in the MTR, since the strength and endurance of these parts were tested in the mock-up. Other sections of the tank were of carbon steel, except for the expansion joint which is stainless steel with carbon-steel flanges.

Some experiment facilities provided in the MTR, including the slant tubes in the in-tank reflector and the horizontal through-hole, were omitted in the mock-up; and no attempt was made to build such facilities into the LITR. The dummy aluminum permanent reflector outside the core box of the hydraulic mock-up was replaced with a beryllium reflector assembled from blocks used in criticality tests. Also, enough removable reflector pieces for the core box were assembled from on-hand pieces of beryllium metal (using a variety of assembly designs) to enclose the two sides of the core which are not adjacent to the permanent reflector. Since then, the core loading has been changed to meet the needs of experimenters.

The fuel elements and shim-safety rods were identical to those to be used in the MTR. The first fuel elements and shim-safety rods used in the LITR were those already on hand which had been used for the full-scale criticality tests of the MTR made in the hydraulic mock-up.

Although the MTR has a graphite reflector outside the reactor tank and such a reflector was used during the MTR criticality tests in the mock-up, no graphite reflector was provided for the LITR.

Detailed descriptions of the LITR components in the core region, the reactor tank, and the research facilities follow.

5.2. Core Components

5.2.1. Fuel Elements

Each new fuel element for the LITR (Figs. 5.2.1 and 5.2.2) contains 200 ± 2.2 g of ^{235}U in the form of uranium-aluminum alloy containing 18.65 wt % uranium. An element consists of nineteen curved fuel plates held between two flat side plates by swaging the side edges into grooves in the side plates. Both the upper and lower ends of this composite are equipped with cast aluminum adaptors which fit into positioning grids in the reactor. The fuel plates are spaced 0.116 in. apart in the fuel element and between elements in the core to provide for coolant flow. The dimensions of the fuel element are given in Fig. 5.2.1 and Table 5.2.1. The 5.5-in. radius curvature of the fuel plates both strengthens the plates and the assembly and defines the direction of thermal deformation to ensure that no coolant gap becomes closed due to the plates from each side deflecting into it.

Each fuel plate is made by placing a machined slab of uranium-aluminum alloy into a machined 1100-series aluminum frame, sandwiching the slab and frame between plates of 1100-series aluminum, and rolling the assembly to the desired thickness, width, and length. This technique ensures that the uranium-aluminum alloy is completely clad on both faces and all edges with aluminum. The two outer fuel plates of each element have a thicker cladding than the inner plates to allow for some abrasion and are made longer to match the length of the flat side plates. The fuel length, however, is the same as that of the inner plates. Each fuel plate contains 10.53 ± 0.20 g of ^{235}U.

ORNL DWG. 67-5001

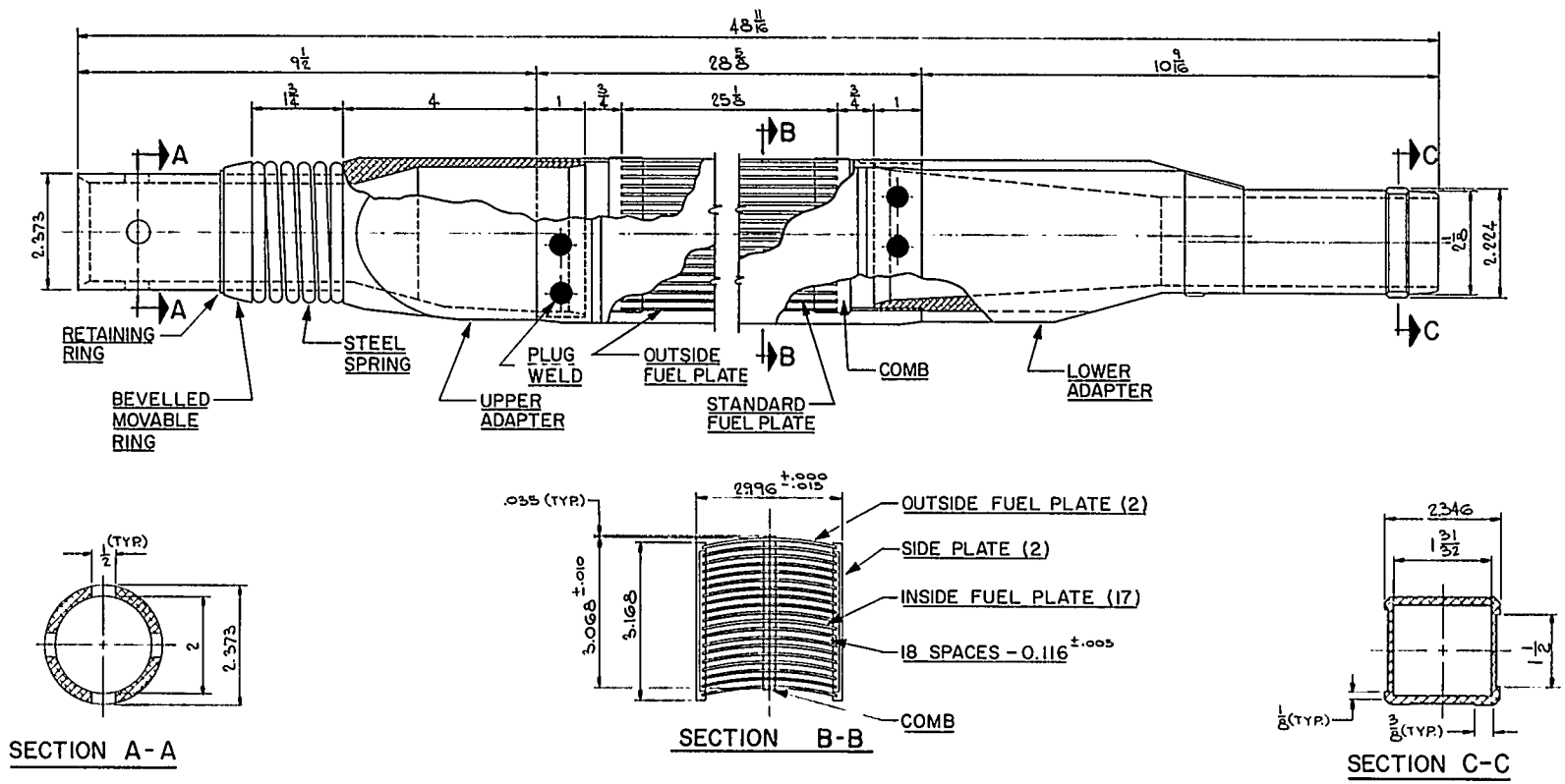

Fig. 5.2.1. LITR Fuel Element

PHOTO 87145

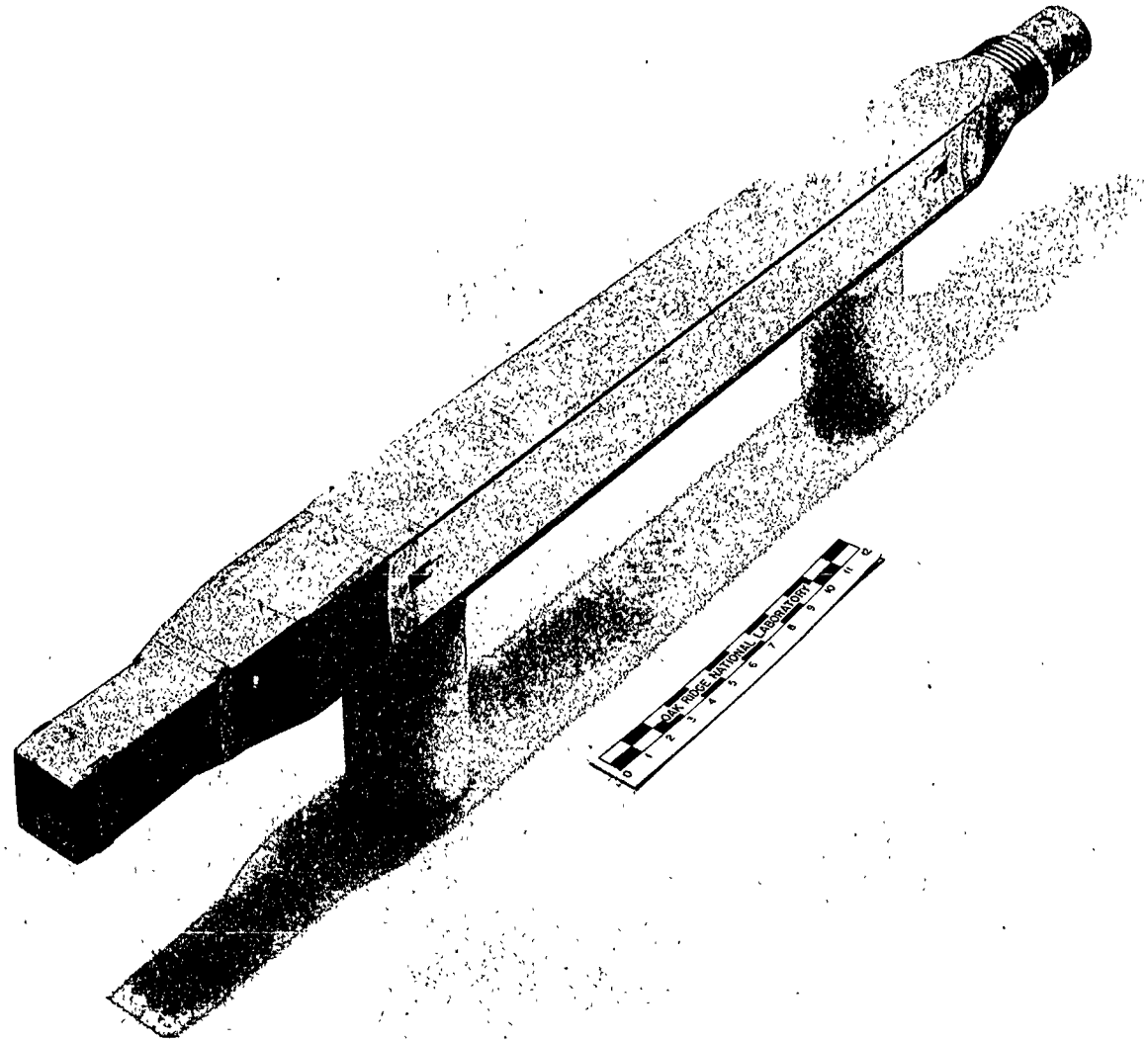

Fig. 5.2.2. LITR Fuel Element

Table 5.2.1. LITR Fuel Element Dimensions

Identification	Dimension (in.)
Fuel Element Assembly	
Length	48.688
Width through side plates	2.996
Width through outside fuel plates	3.068
Fuel plate separation	0.116
Inside Fuel Plates	
Thickness overall	0.050
Length overall	25 1/8
Clad thickness	0.015
Alloy thickness	0.020
Maximum alloy length	24.000
Width before bending	2.800
Outside Fuel Plates	
Thickness overall	0.065
Length overall	28 5/8
Clad thickness	0.0225
Alloy thickness	0.020
Maximum alloy length	24.000
Width overall before bending	2.800
End Box Locating Pads	
Measurement between pads on the fuel element flat sides	2.346
Measurement between pads on the curved sides	2.224

5.2.2. Shim-Safety Rods

Coarse reactivity control and reactor shutdowns are accomplished by the use of three vertically operating MTR-type shim-safety rods. These rods (Fig. 5.2.3) whose midsections conform to the fuel-element cross-sectional pattern, consist of a cadmium-containing section which is positioned in the core when the rod is fully inserted and a fuel section which is positioned in the core when the rod is fully withdrawn. An upper square hollow section, made of aluminum, rides within the upper bearing as the rod is moved. At the top of the upper section is a nickel-plated iron block (armature) which allows the rod to be clutched by an electromagnet on the bottom end of the rod drive shaft. The armature is attached to the top of the rod with a spring-loaded, keyed swivel joint which ensures good contact with the face of the electromagnet but does not permit rotational movement. A flexible wire connected from the armature to the inner surface of upper aluminum section ensures good electrical contact between the two pieces as is required for the clutch circuit described in Section 8. The lower part of the rod consists of a square hollow stainless-steel section which moves in the lower bearing. To the square section is attached a lead-weighted stainless-steel section which is cylindrical at its lower end and serves as the piston in a hydraulic shock absorber. When the rod is dropped to effect a fast reactor shutdown, the cylindrical end of the rod falls into a close-fitting hollow stainless steel cylinder (dash pot) affixed to the bottom of the reactor tank. The water trapped in the cylinder cushions the impact of the falling rod.

The fuel section of the rod contains fuel plates which have the same length as the inner fuel plates of the fuel elements so that, when the rod is in the fully-withdrawn position (as defined by the rod drive upper limit), the top and bottom of the fuel in the rod are at the same elevations as the top and bottom of the other fuel in the core. The width of the fuel plates is less than that of those in the fuel elements, and the number of fuel plates is reduced to 14 since the fuel plates are enclosed in a thick aluminum shell which protects them from abrasion during movement of the rod. The fuel section of a new shim-safety rod contains 150 g of ^{235}U.

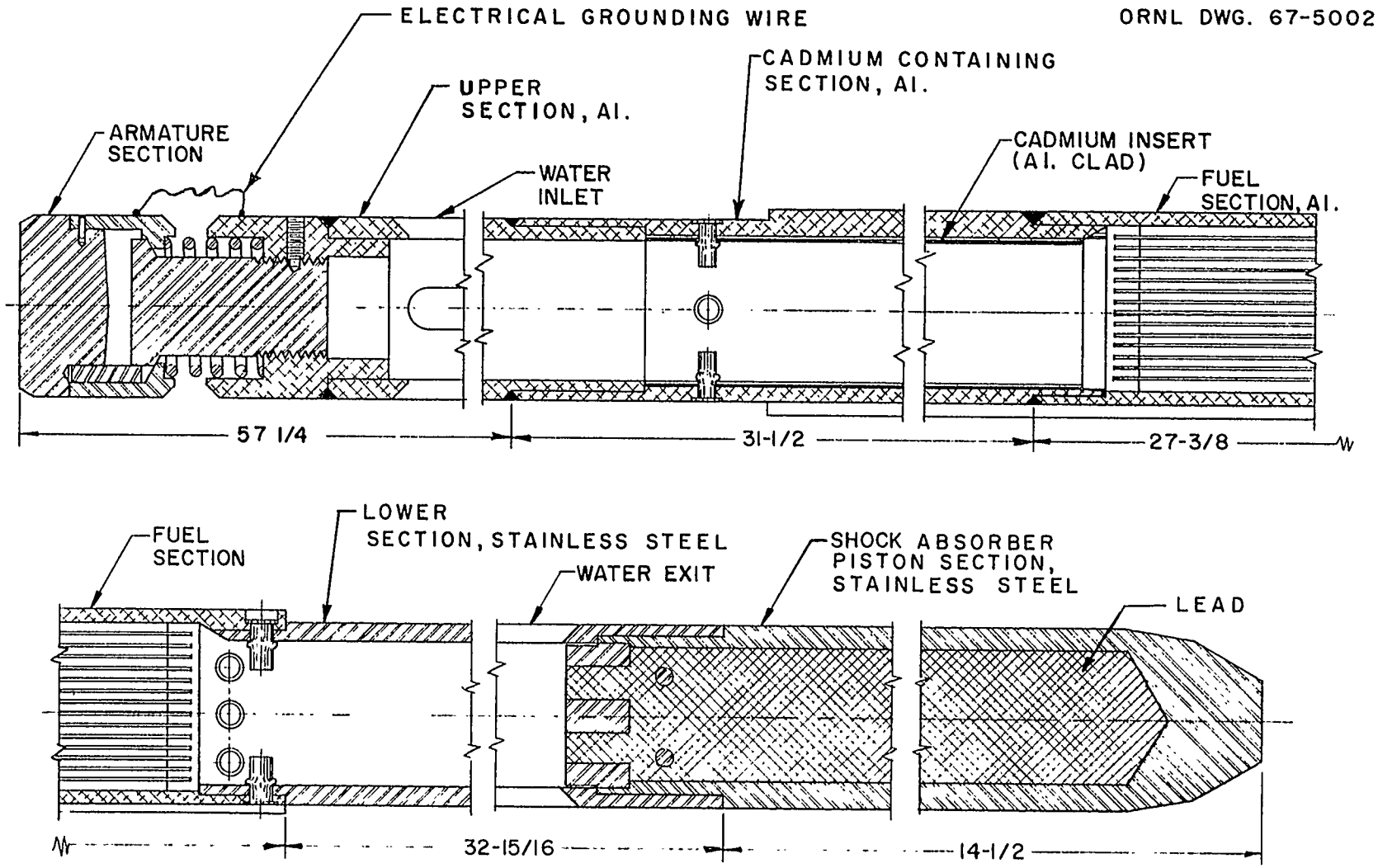

Fig. 5.2.3. Vertically Operating MTR-Type Shim-Safety Rods

The bottom of the cadmium section of the rod is about 11/16 in. above the top of the fuel section. The cadmium is in the form of a 2.35-in. square sleeve 24 5/8 in. long and is encapsulated in 0.02-in.-thick aluminum sheet. When the rod is in its fully inserted position, the ends of the cadmium sleeve extend 4 1/16 in. above and 5 7/16 in. below the core.

Slots in the upper and lower square sections allow water to flow through the cadmium and fuel sections.

Figure 5.2.4 shows the relationship of the rod to its guide bearings and to the reactor. It can be seen that as the shim rod is withdrawn upward, the cadmium portion is pulled from the core while the fuel section enters the core, thus increasing the reactivity of the reactor. When the reactor is scrammed, the shim rods fall by gravity and decrease the reactivity of the core.

Table 5.2.2 lists the important dimensions of the shim rod.

5.2.3. Regulating Rod

The regulating rod (Fig. 5.2.5) is a cadmium-bearing hollow cylindrical aluminum shaft which moves vertically through a hole in the permanent beryllium reflector near the northeast corner of the core (Fig. 5.2.6). It is used for fine reactivity adjustments and power-level corrections by the automatic servo system. The rod is 1 5/8 in. in diameter and 10 ft 4 3/16 in. long and consists of an upper aluminum section, a midsection which contains 24-in.-long by 40-mil-thick cadmium strips sandwiched between the inner and outer aluminum walls, and a lower cadmium section. A position pin running diametrically through the upper aluminum section defines the lower travel limit of the rod and, by fitting into slots in the upper bearings, prevents rotational motion of the rod during connecting and disconnecting of the drive shaft. Guide bearings for the rod are mounted on the top and bottom grid support castings.

A long, captive rod extending through the hollow regulating-rod drive shaft is threaded on its lower end and screws into a threaded 1/2-in. diam hole in the top of the regulating rod to connect the rod to the drive shaft. Both the upper and lower shock absorbers for the combined rod and drive shaft are external to the reactor tank and are located on the top plug.

ORNL DWG 67 5003

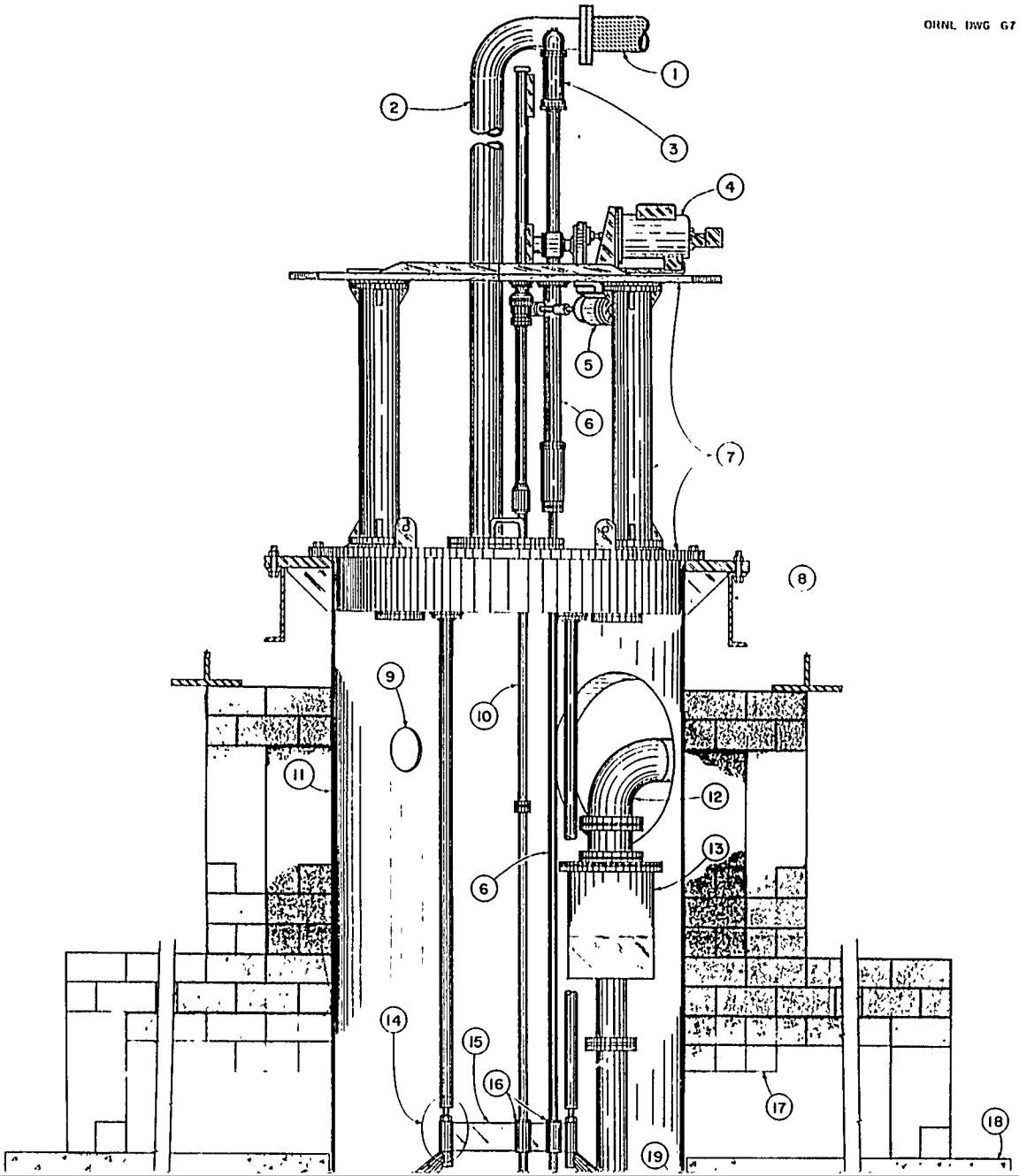

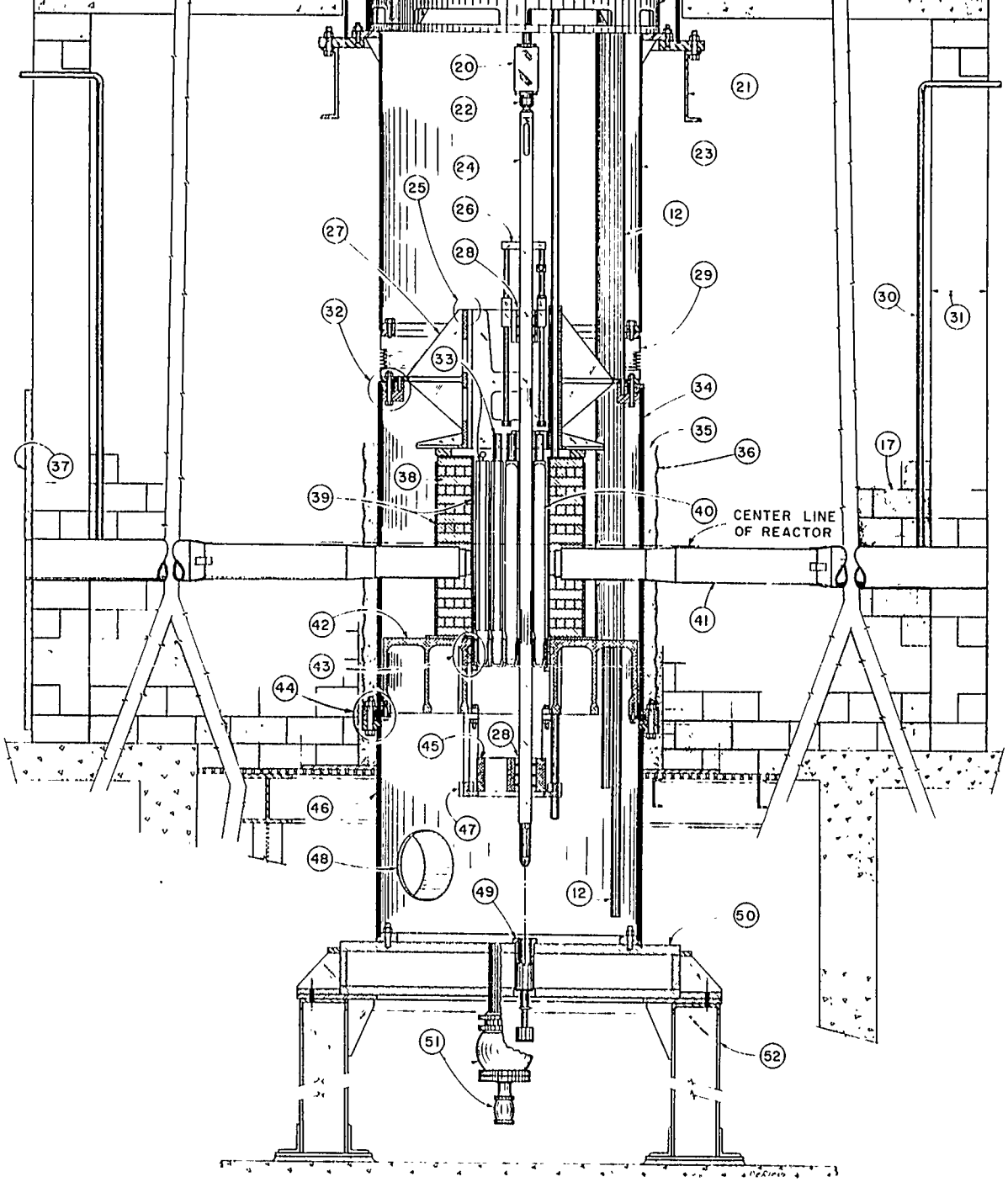

Fig. 5.2.4. Vertical Cross Section of the LITR

1. Flexibl
2. Overpre
3. Regulat
4. DC Moto
5. Shim Ro
6. Regulat
7. Top Plu
8. Upper S
9. Primary
10. Shim Ro
11. "A" Sec
12. Primary
13. Exit Wa
Transit
14. "Spider
(Fig. 5
15. Guide B
16. Guide B
17. Dry Sta
18. Precast
19. Guide R.
20. Electror
21. Support
22. Shim Ro
23. "B" Sec
24. Shim Ro
25. Locking
Assembl
26. Lifting

Legend for Figure No. 5.2.4

Rubber Line
ure Relief Line
g Rod Upper Shock Absorber
for Regulating Rod
Drive Motor
g Rod Drive Shaft
Assembly
port for Reactor Tank
ater Inlet Opening
Drive Shaft
on of Tank
ater Exit Line
r Line Expansion Joint and
n Piece (Fig. 6.7.2)
Positioning Mechanism
.9)
ring Grid, "Spider"
ring
ed Concrete Block Shield
oncrete Slabs
g for "Spider"
gnet
or Reactor Tank
Armature
on of Tank

evice for Upper Grid
(Fig. 5.3.13)
evice for Upper Grid Assembly

27. Upper Grid Support
28. Shim Rod Guide Bearing
29. "C" Section of Tank
30. Ventilation System for Beam Holes and Dry Stacked Shield (Fig. 9.2.2)
31. Mortared Concrete Block Shield
32. Figure 5.3.5
33. Removable Beryllium Reflector Pieces
34. "D" Section of Tank
35. River Sand
36. Plastic Impregnated with B_4C
37. Shielding, Steel Plate
38. Permanent Beryllium Reflector
39. Box for Permanent Reflector
40. Fuel
41. Beam-Hole Liner
42. Lower Fuel Grid Support
43. Side Skirt Plate and Fuel Grid Locking Device (Figs. 5.3.11 and 5.3.12)
44. Figure 5.3.7
45. Lower Guide Grid (Fig. 5.3.14)
46. "E" Section of Tank
47. Lower Guide Grid Cradle (Fig. 5.3.14)
48. Sealed Opening
49. Shim Rod Shock Absorber and Seat Switch Assembly (Fig. 5.3.8)
50. "F" Section of Tank
51. Reactor Tank Drain Valves
52. Lower Support for Reactor Tank

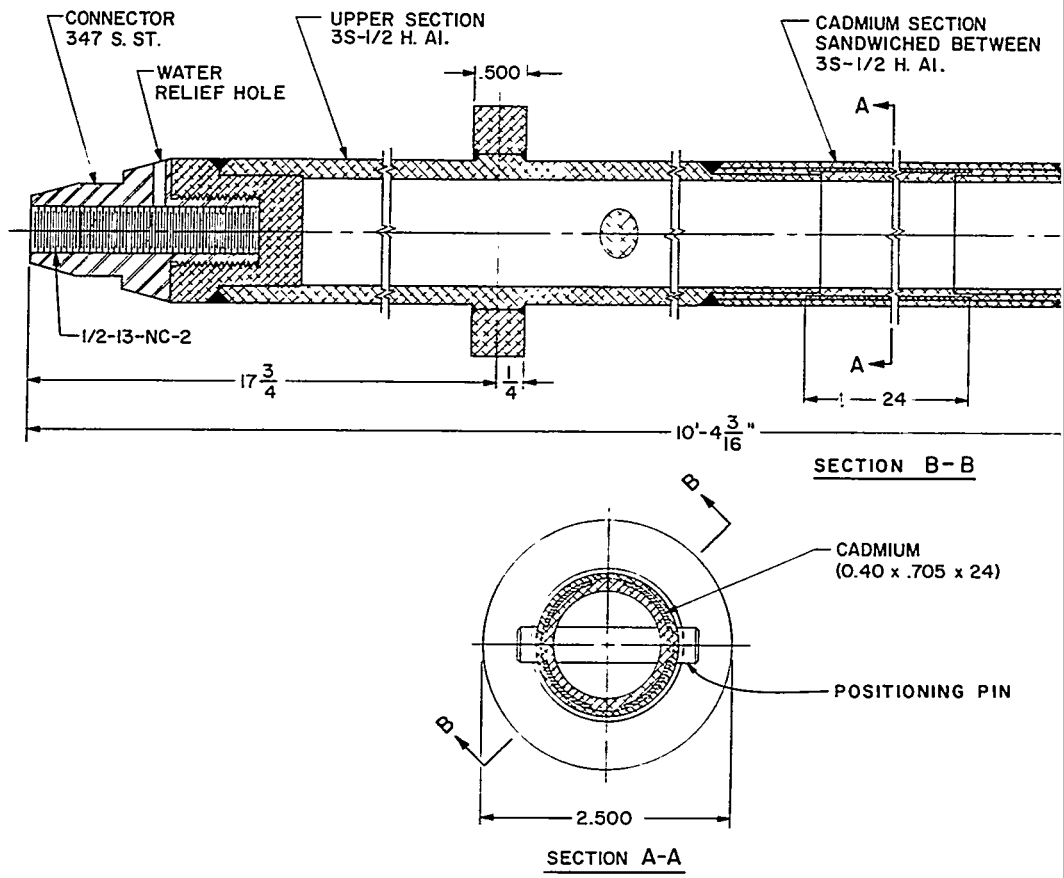

Fig. 5.2.5. LITR Regulating

ORNL DWG. 67-5004

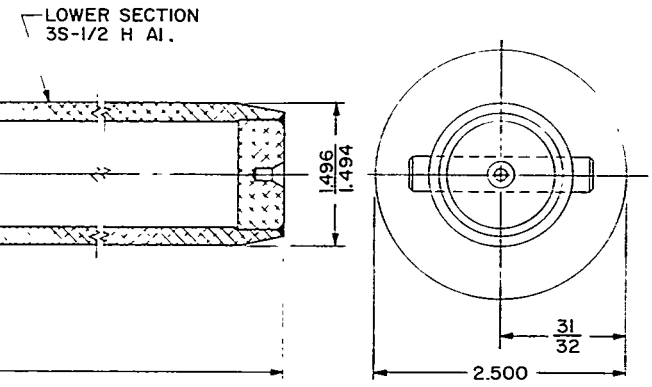

NOTES:

1. TURN DOWN TO DIA. SHOWN AFTER FINAL ASSEMBLY.
2. THIS DWG. SUPERSEDES DWG. NO. TD-700, TD-701, TD-702, TD-703, TD-704, TD-705, TD-706, TD-707, & TD-708.
3. THESE ARE "AS BUILT" DWGS.
4. ALL WELDING, AS SHOWN, TO BE HELIARC: WELD BEFORE FINAL FINAL TURNING OPERATION.

od

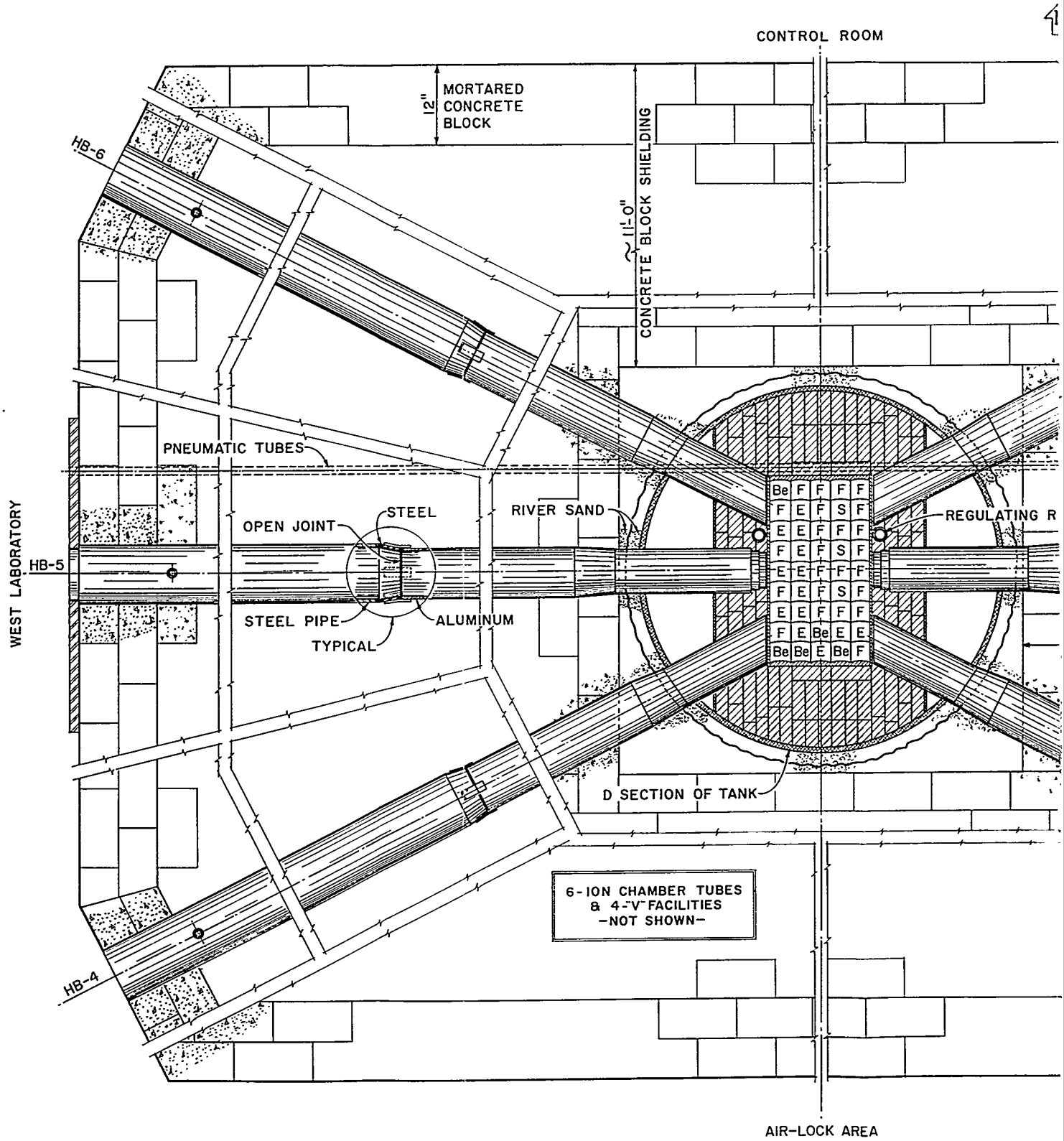

Fig. 5.2.6. Horizontal Cross Section

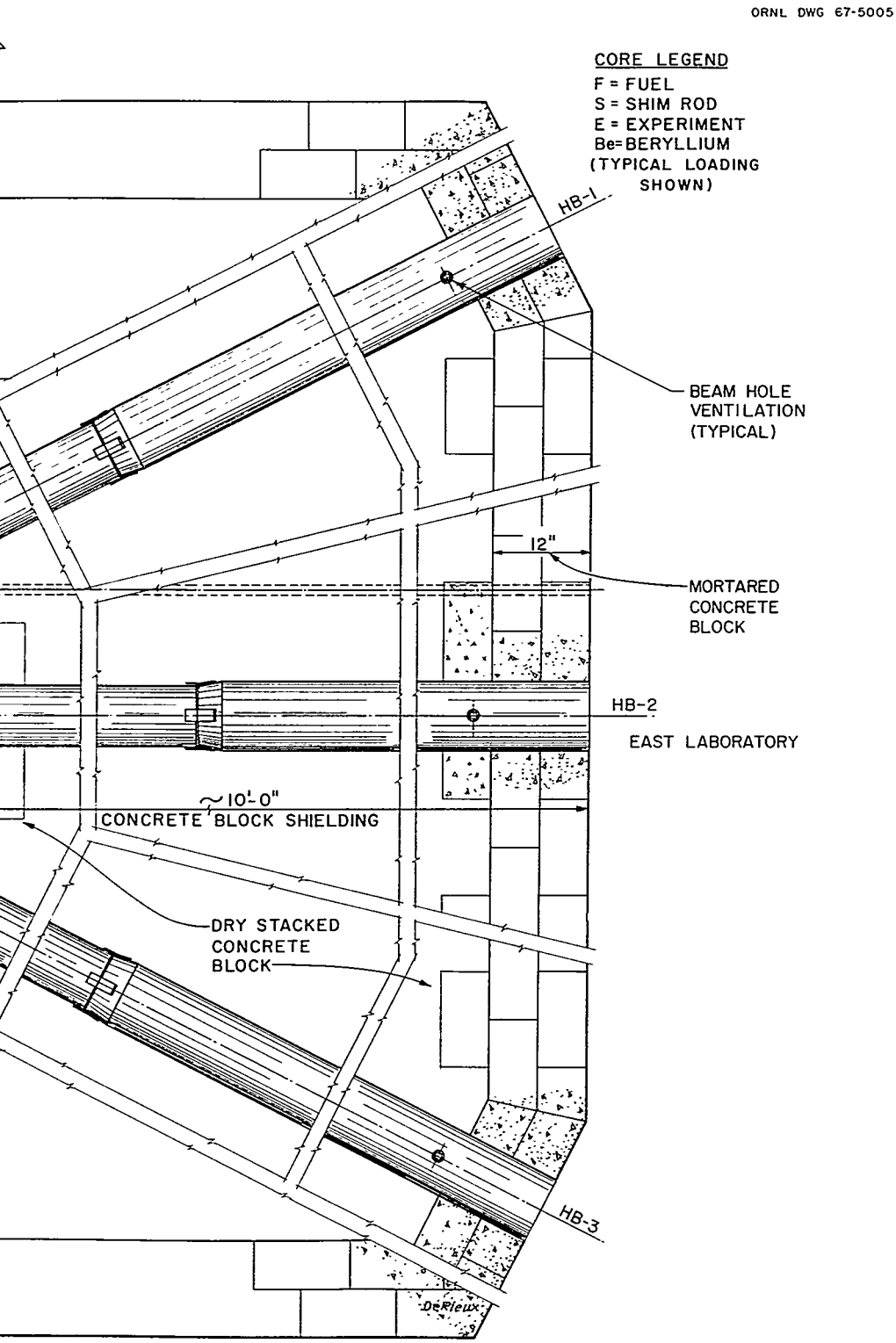
ORNL DWG 67-5005
CORE LEGEND
F = FUEL
S = SHIM ROD
E = EXPERIMENT
Be=BERYLLIUM
(TYPICAL LOADING SHOWN)
HB-1
BEAM HOLE VENTILATION (TYPICAL)
12"
MORTARED CONCRETE BLOCK
HB-2
EAST LABORATORY
~10'-0"
CONCRETE BLOCK SHIELDING
DRY STACKED CONCRETE BLOCK
HB-3
DeRieux

the LITR

Table 5.2.2. Dimensions for the LITR Shim Rods

Unit	Inches
Shim Rod Assembly	
Length	163 9/16
Width (through side plates)	2.835
Width (four through side plates)	3.068
℄ cadmium to ℄ fuel	~30 7/8
Bottom of cadmium to top of fuel	~11/16
Upper Section (Aluminum--Part 1)	
Length	54 1/2
Outside dimensions	2.875 x 2.838
Upper Section (Aluminum--Part 2 for Cd Insert)	
Length	31 1/2
Outside dimensions	2.835 (flat) x 3.229
Jacketed Cadmium Insert	
Length (overall)	30 11/16
Length (Cd)	30 7/16
Outside dimensions	2.350[a]
Insert thickness (total)	0.080
Cadmium thickness	0.040
Jacket thickness (inner and outer)	0.020
Fuel Plates (14)	
Plate spacing	0.115[b]
Thickness (overall)	0.060
Length	24 5/8
Clad thickness	0.020
Core (alloy) thickness	0.020
Core (alloy) length and width	23 (avg)
Shock Section (SST)	
Length (overall)	14 1/2
Length (tapered round end)	9

[a]Square

[b]Typical

5.2.4. Permanent Reflector

The core box is surrounded by a beryllium metal reflector formed by stacking beryllium blocks, most of which are 2 x 2 x 8 in. Other sizes and shapes were used as required to fit around the beam tubes and to conform to the reactor tank outline on the north and south sides of the core box (Fig. 5.2.6). On the east and west sides of the core, the reflector is 8 in. thick.

To provide a flat surface for stacking the beryllium, an aluminum plate conforming to the outline of the reflector was tack welded to the irregular upper surface of the lower support casting. The stacked beryllium is covered on the top, the east and west sides, and in the core box with aluminum sheets tack welded together and to the beam tubes. No coolant flow paths were provided through the blocks. The height of the reflector is about 38 in. around the top of the core box and on the east and west sides the beryllium stack and the aluminum cover are clamped down by the upper grid support casting; on the north and south, curved bars bolted to lugs welded to the reactor tank hold down the edge of the aluminum sheet and the beryllium stack.

Two vertical holes through the stacked beryllium were provided to accommodate regulating rods--one near the northeast corner of the core box and one near the northwest corner. The northeast hole is drilled through a single square beryllium piece which extends through the full height of the reflector. The northwest hole is drilled through the 2 ft- x 2 ft- x 8-in. blocks.

5.2.5. Removable Reflector

A sufficient number of beryllium-metal reflector elements were provided to reflect the south and west sides of the first core which were not adjacent to the permanent reflector. These removable reflector elements are of the same size and shape as fuel elements and are equipped with lower end boxes to fit into the lower fuel grid. Some are equipped with fuel-element upper end boxes; others have only eyebolts on top to facilitate handling. Originally, the remaining vacancies in the core box were occupied by water-filled aluminum cans made in the shape of reflector elements; however, as experiment rigs were installed in the core box and as the core size itself was increased, the water-filled cans were discarded.

5.3. Reactor Tank and Associated Components

5.3.1. Tank Sections

Figure 5.3.1 is a photograph of the hydraulic mock-up of the MTR showing most of the reactor tank before the shielding was installed and the mock-up converted to the LITR. The two lowest sections, "E" and "F", are not seen in this picture. The two large-diameter pipes shown connected to the top of the tank were for the hydraulic tests and were removed when the tests were completed. A detailed description of the initial installation of this tank and of its parts has been written in two ORNL reports, Procedure for Erection of the Materials Testing Reactor Mock-Up, ORNL 692, and Mock-Up Design Report, ORNL CF-49-10-185.

The reactor tank, or vessel, consists of six sections--A, B, C, D, E, and F (Fig. 5.2.4), with tank sections A, B, and F rigidly fixed to structural steel members. Expansion is provided for by tank section "C", which is a stainless steel expansion joint. All tank sections are made of mild steel except the expansion joint and "D", the core section, which is of 3-S aluminum. Precise alignment of the tank sections is important to ensure the proper operation of the control rods. Figure 5.3.2 gives important vertical dimensions and elevations for the LITR vessel. All tank flanges except for the top of section "A" have serrated faces to ensure a good seal against gaskets. All flange seals except those between the top plug and section "A" and between sections "C" and "D" are made with aluminum gaskets.

Tank section "A" contains both the entrance and exit penetrations for the cooling water. Tank section "A" was designed to be large enough in diameter (70 in. ID) to permit replacement of the smaller tank sections below by withdrawing them through it (see Fig. 5.3.3, which is a photograph of section "B" being lowered into position). For LITR use, the two 36-in. openings for MTR water inlet were modified for the smaller 8-in. reactor outlet line and for an experiment access. Another 8-in. penetration in the wall of tank section "A" was made for the inlet water line. Originally, six sight glasses were provided in this section. Four near the bottom were blanked off, but two in the upper one-third of the

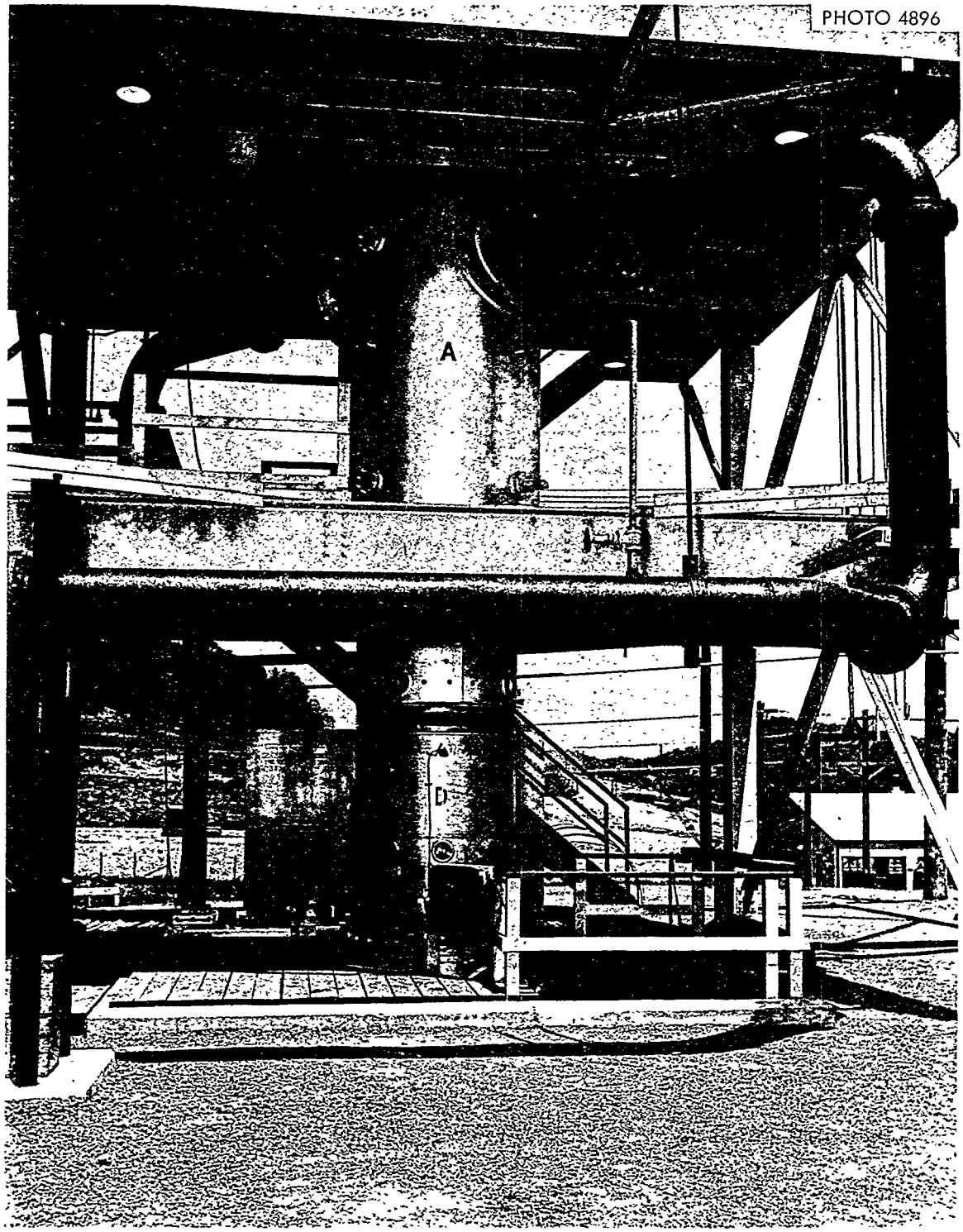

Fig. 5.3.1. Hydraulic Mock-Up of the MTR

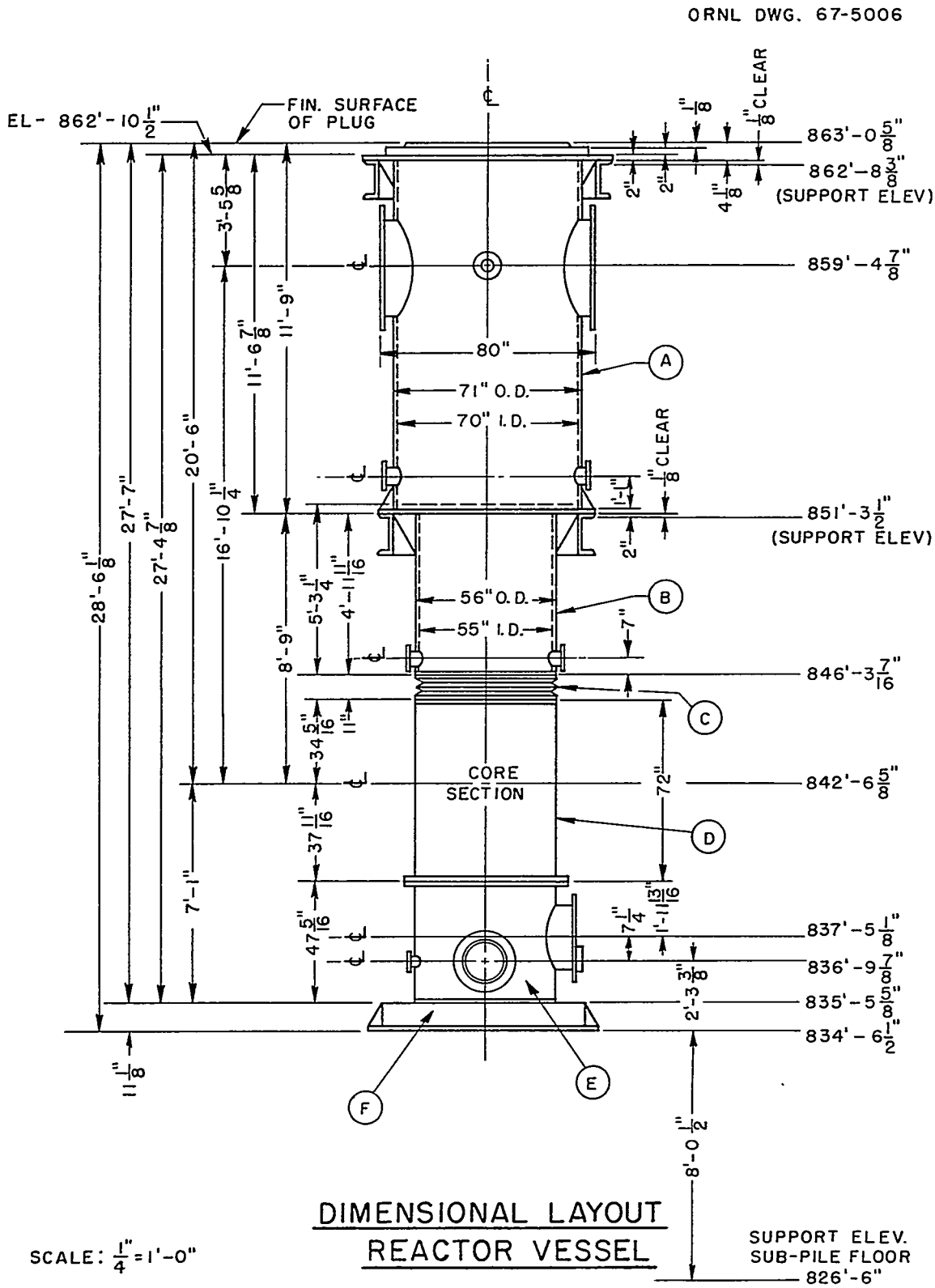

Fig. 5.3.2. Dimensional Layout of the Reactor Vessel

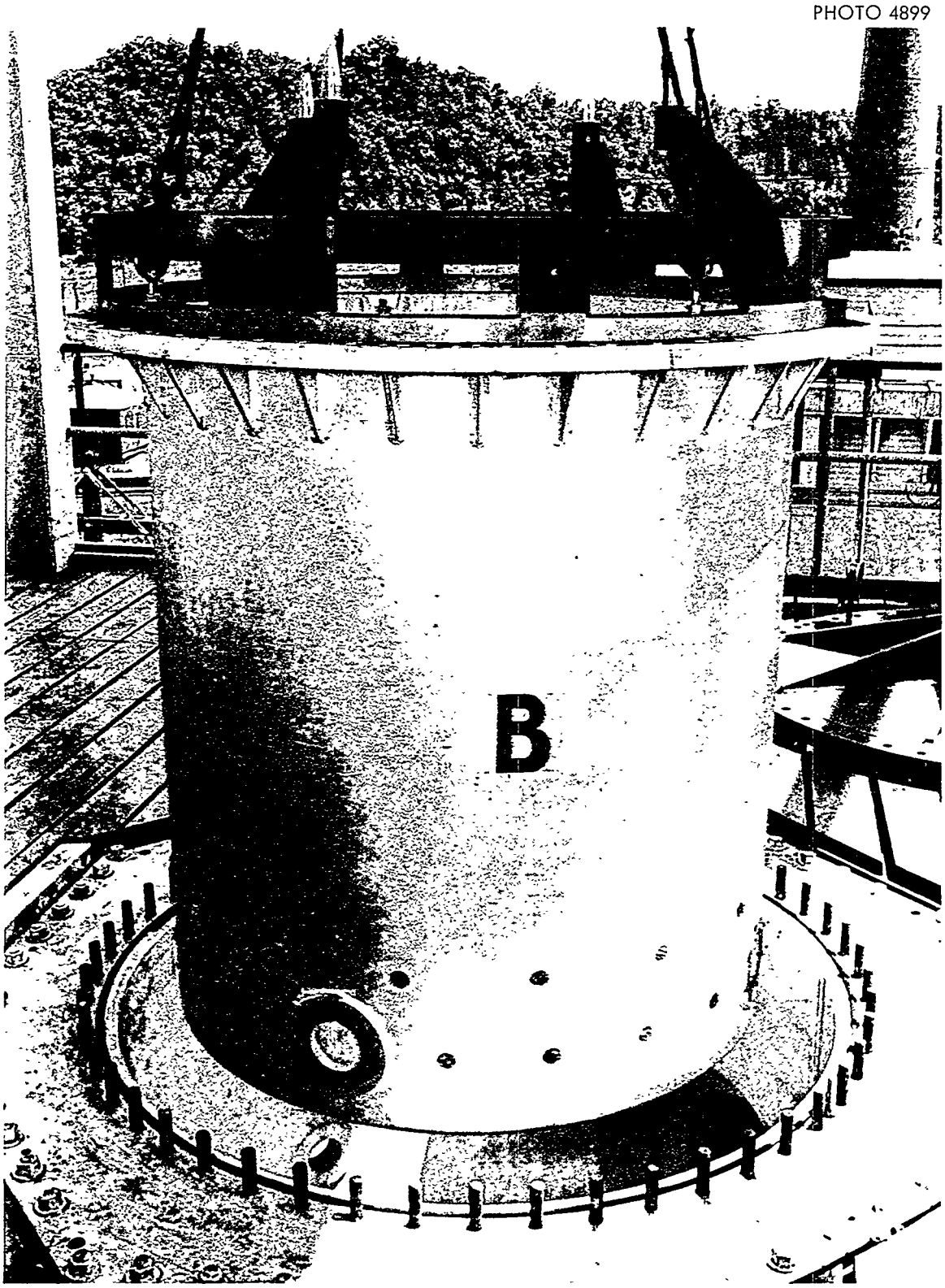

Fig. 5.3.3. Assembly of LITR Vessel

vessel are now used as experiment access ports. Seven other penetrations, originally provided for instrument purposes, were also blanked off. For experiments, there now are eleven openings in the side of section "A" so that monitoring leads, coolant pipes, etc., for the experiments can be installed in a somewhat permanent manner.

To enhance rigidity, the wall thicknesses of the "A" and "B" tank sections (5/8 and 1/2 in., respectively) were made greater than the 1/4 and 5/32 in. required to withstand the 100-psi design pressure. Also, both flanges of tank section "A" are considerably heavier (2-in.-thick plate) than required (1.175 in.).

To provide support for section "B", section "A" was equipped with an inside flange at the bottom. Section "B", with an outside flange at the top, is supported on the inside flange of section "A" as shown in Fig. 5.3.4. The shelf formed by this junction supports the four guide pins, see Section 5.3.2, which align the assembly of guide bearings ("spider") for the shim-rod drives. This bearing assembly is suspended from the top plug. The guide pins can be seen in Fig. 5.3.3. Tank section "B" originally had four sight glasses which were located near the bottom of the section. These have been blanked off.

Tank section "C" is a type-347 stainless steel bellows, 11 in. tall with inside carbon steel flanges. The bellows was built to withstand a 75-psi design pressure and is flanged and gasketed to the aluminum "D" tank below and to section "B" above. At the steel-to-aluminum joint between "C" and "D" tanks, a cord-reinforced rubber gasket was necessary in order to make a seal. Figure 5.3.5 is a sketch showing details of the flanged connection between "D" and "C" sections.

Tank section "D" (Fig. 5.3.6) is made of 3-S aluminum and is 54 1/2 in. ID, 3/4 in. thick, and 6 ft tall. It has an inside flange at the top and an outside flange at the bottom. To provide bearing surfaces for the upper fuel-grid supports, six aluminum lugs (see Fig. 5.3.5) were welded to the inside of the upper flange of section "D". The upper grid support casting is bolted and doweled to them. The lower flange has a circumferential groove cut into the inside edge to accommodate a three-segment support ring which provides a bearing surface for the lower grid

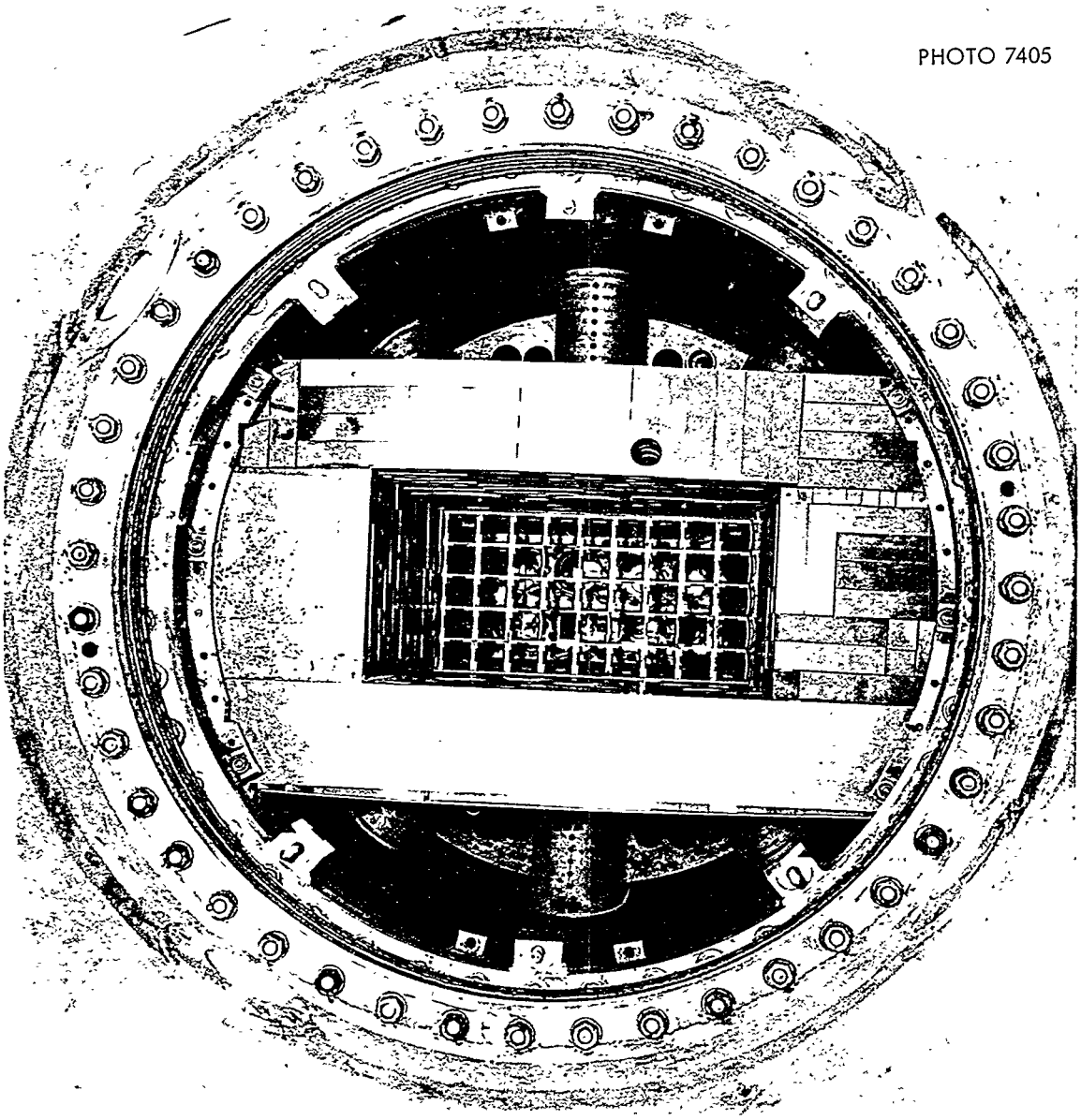

Fig. 5.3.4. View of Inside of Reactor Vessel During Construction

ORNL DWG. 67-5007

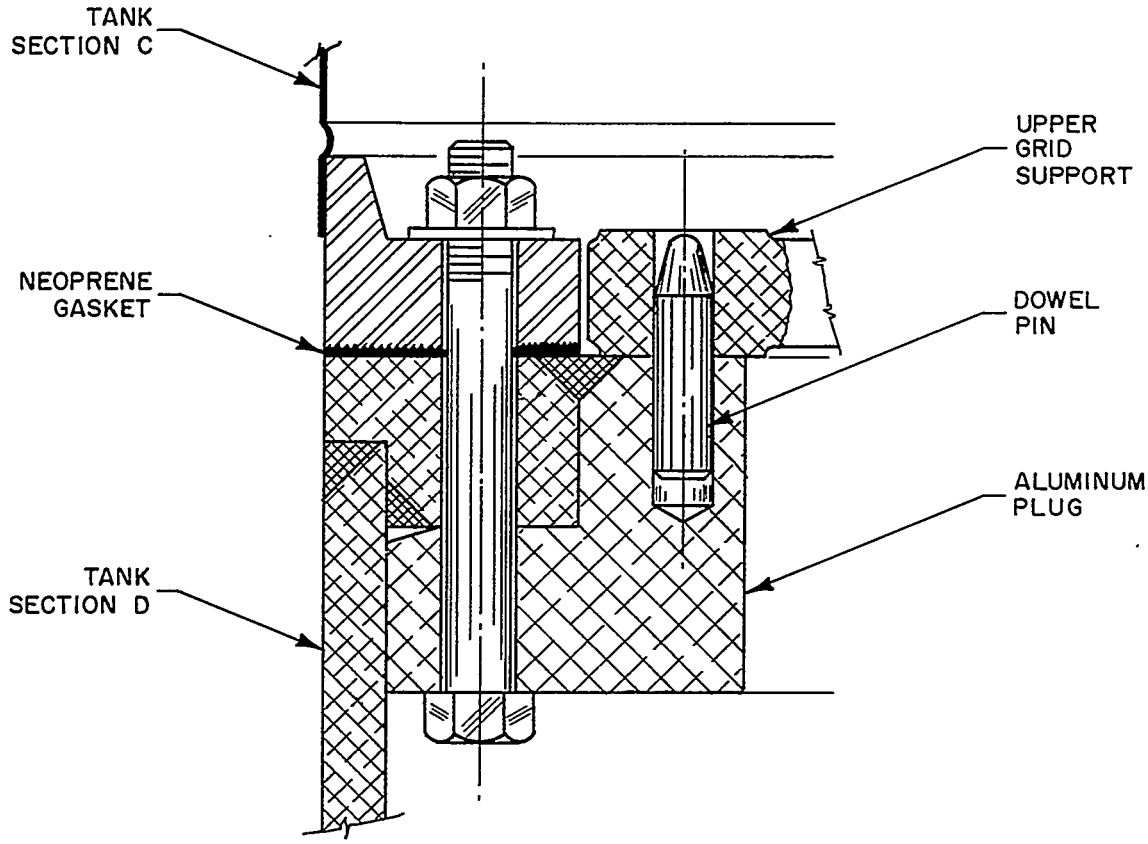

Fig. 5.3.5. Flanged Connection Between "C" and "D" Tank Sections

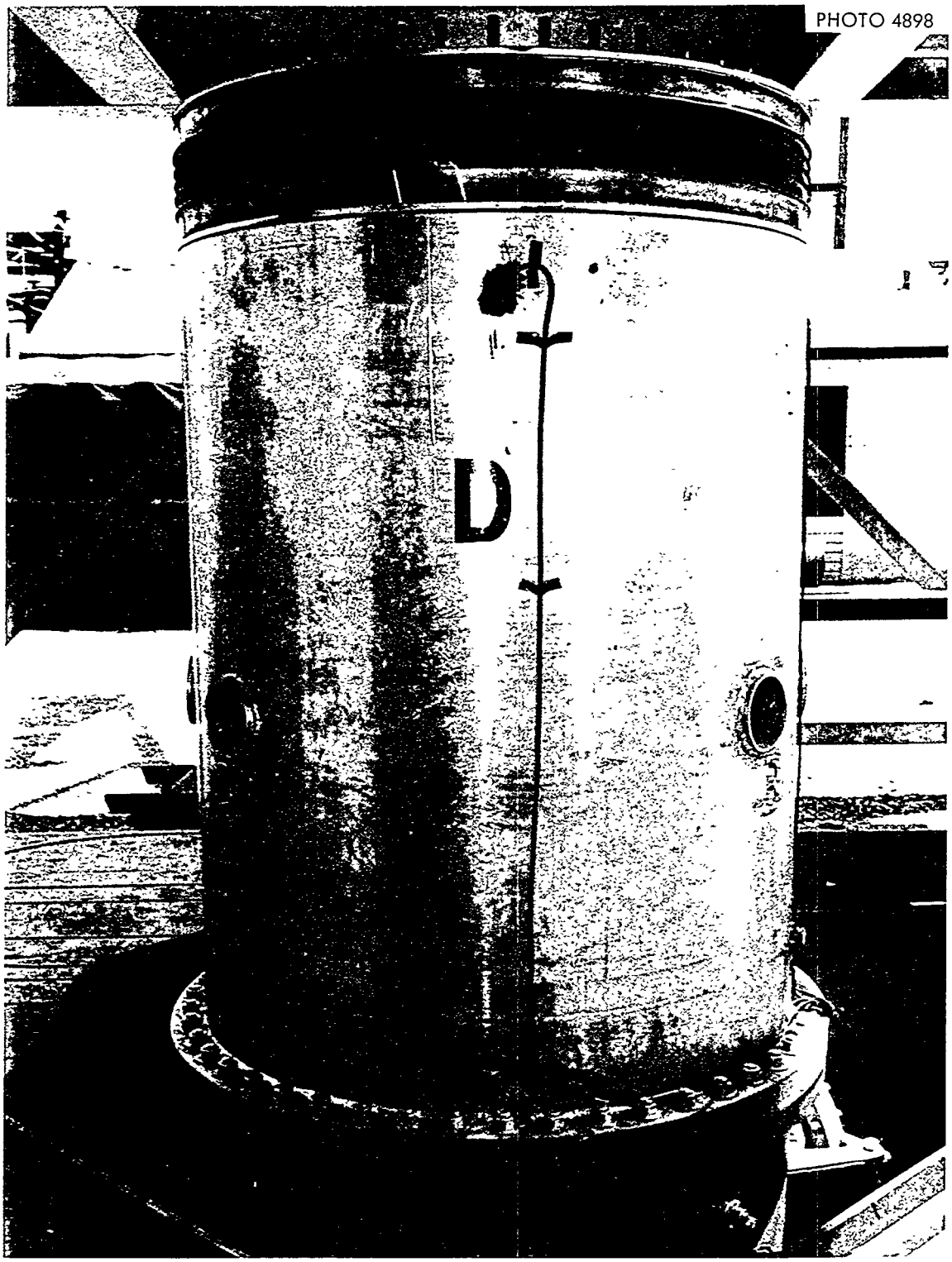

Fig. 5.3.6. View of Tank Section D

support casting. Figure 5.3.7 is a sketch of a section of the flanged joint between sections "D" and "E" and of the support ring. This method of attachment was chosen so that no welding would be required during final assembly. Since the beam-hole thimbles and horizontal pneumatic tubes prevented insertion of the lower grid support casting from the top, it was necessary to elevate it into position through the bottom of section "D". For this reason it was necessary to have an outside flange at the bottom of section "D" and a matching outside flange at the top of section "E".

In order to keep neutron absorption to a minimum, 3/4-in.-thick 2-S aluminum was used for the MTR "D" tank section. The maximum allowable working stress for 2-S aluminum at less than 250°F is 2080 psi (Table U-3, ASME Code, Unfired Pressure Vessels, 1943) and the maximum allowable working pressure has been calculated to be 51 psi (Par. U-20, ASME Code, Unfired Pressure Vessels, 1932). For the LITR, 3-S aluminum of the same thickness was used; therefore, the maximum allowable working pressure for the LITR section "D" is greater than 51 psi. This tank section is pierced by six thimbles for the beam holes and by two horizontal aluminum tubes in which the pneumatic tubes were installed.

Tank section "E" is made of 3/4-in.-thick carbon steel. It was designed to provide outlet water ports for the MTR test vessel; however, these ports have been sealed. The LITR water outlet system is a group of vertical pipes which convey the water up through the reactor tank and out section "A".

Tank section "F" is the bottom of the vessel and serves the functions of closing the tank and supporting the shim rod shock absorbers and all of the LITR vessel sections below the expansion joint. This section consists of two flat, circular, mild steel plates, welded to the top and bottom of a 72-in.-diam, 7 5/8-in.-high steel hoop and reinforced by five radial steel ribs within the hoop. The top plate is 2 in. thick; the bottom plate is 1 1/2 in. thick. The top plate of this section is the bottom water seal of the reactor; all communication sleeves for water sampling, thermocouples, control switches, etc., that pass through this section are welded to the top plate and sealed at the lower end by pipe

ORNL DWG. 67-5008

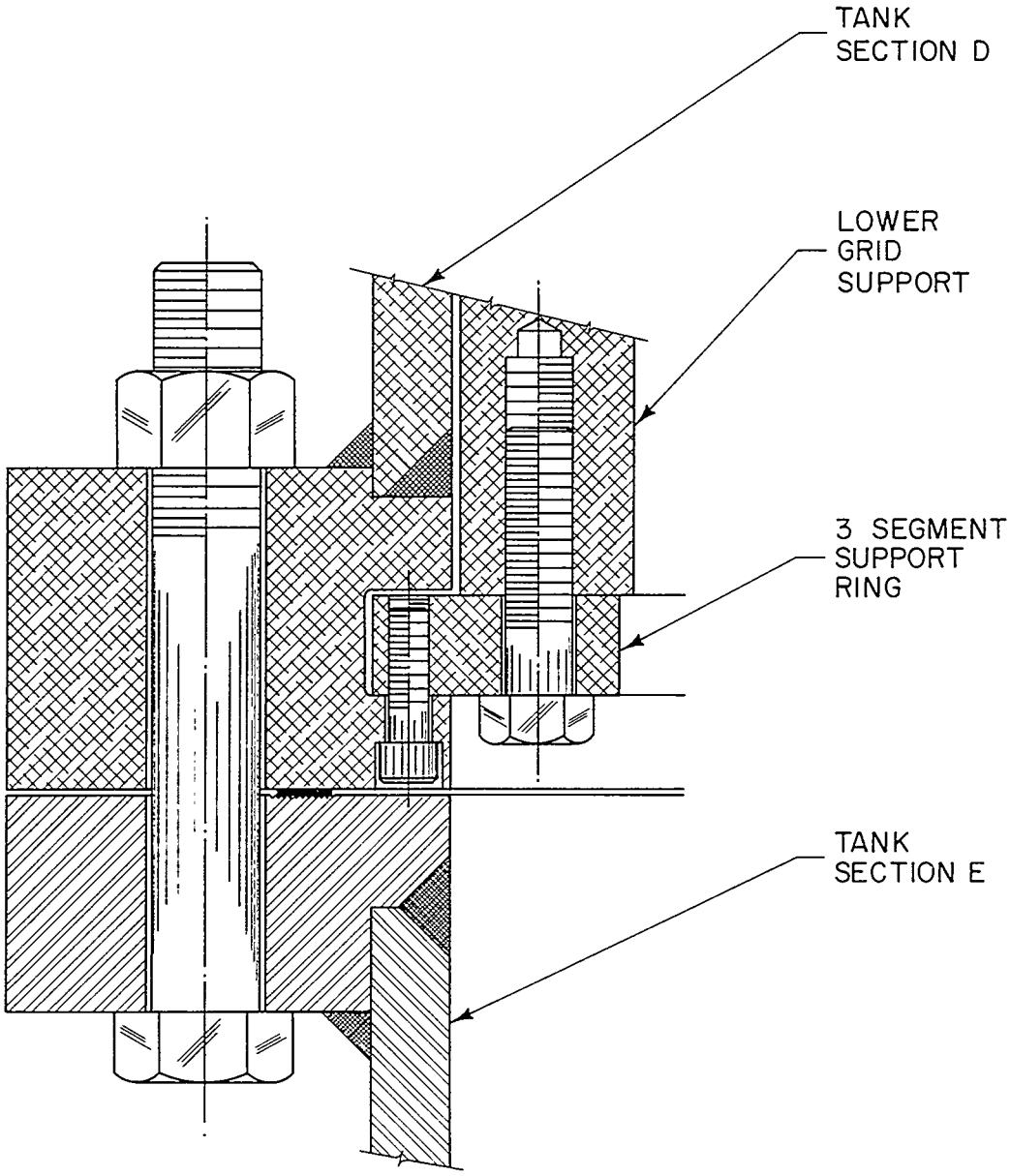

Fig. 5.3.7. Flanged Connection Between "D" and "E" Tank Sections

couplings or flanges. The shock absorbers have gaskets between their flanges and section "F" (see Fig. 5.3.8). The largest opening through the bottom of the vessel is a 6-in.-diam steel pipe with two valves, in series, flanged to it.

The joint between sections "E" and "F" is made by bolting, using an inside interval flange welded to the bottom of section "E", stud bolts in tapped holes in the top surface of section "F", and a soft aluminum gasket between serrated faces on the two bolted surfaces. The serrated surfaces and the gasket are located outside the bolt circle. The lower support for the reactor tank consists of five steel I-beam columns affixed to lugs welded to the side of section "F". These columns rest on concrete footings. The method of support is shown in Fig. 5.2.4.

5.3.2. Top Plug Assembly

The "top plug" assembly, in addition to acting as the top closure for the reactor vessel, serves as the support for the bed-plate on which the control-rod drive motors are mounted. Item No. 7 in Fig. 5.2.4 is a drawing of the top plug. As can be seen in the figure, it is bolted to the upper flange of section "A" of the reactor tank. The top plug itself is made from 2-in.-thick circular pieces of heavy, heat-treated 18-8 stainless steel plate. The top plate, which is the top seal of the reactor tank, is 2 in. thick while the bottom plate is 1/2 in. thick. Separating these plates is a space 10 in. high bounded by a stainless steel hoop welded to the outer edges of the two plates. The space between the plates contains a network of stiffening, mutually side-braced ribs. Under a pressure of 50 psi, which was present only during the period when the reactor vessel was the MTR mock-up, the calculated deflection is only 0.005 in.

Between the top plug and the section "A" top flange is a 3/8-in.-square neoprene gasket which seats into a groove designed to permit the entire gasket to be compressed into the groove giving a metal-to-metal contact between the top plug and the flange. The metal-to-metal contact is necessary to insure correct alignment of the control-rod drive assemblies.

ORNL DWG. 67-5009

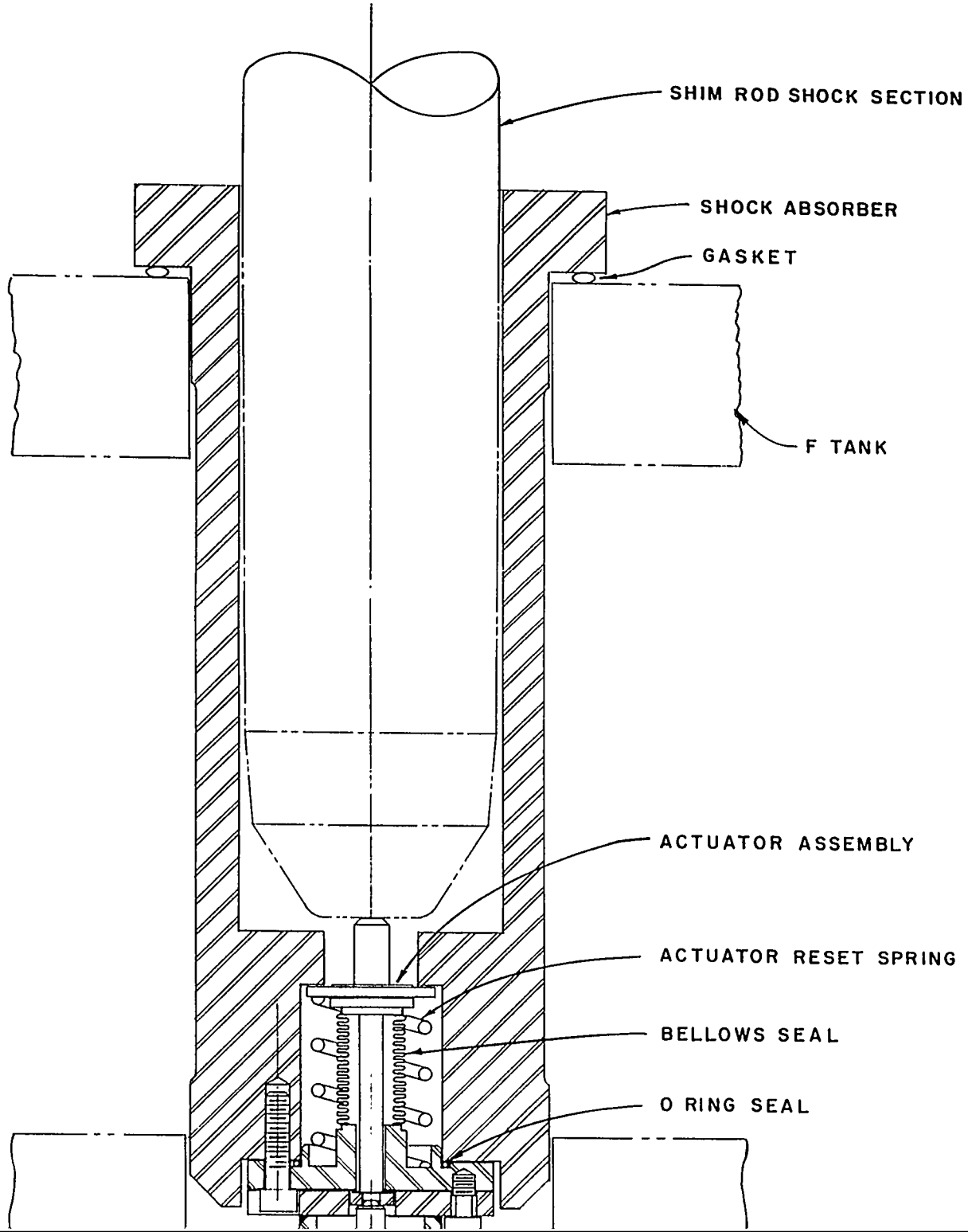

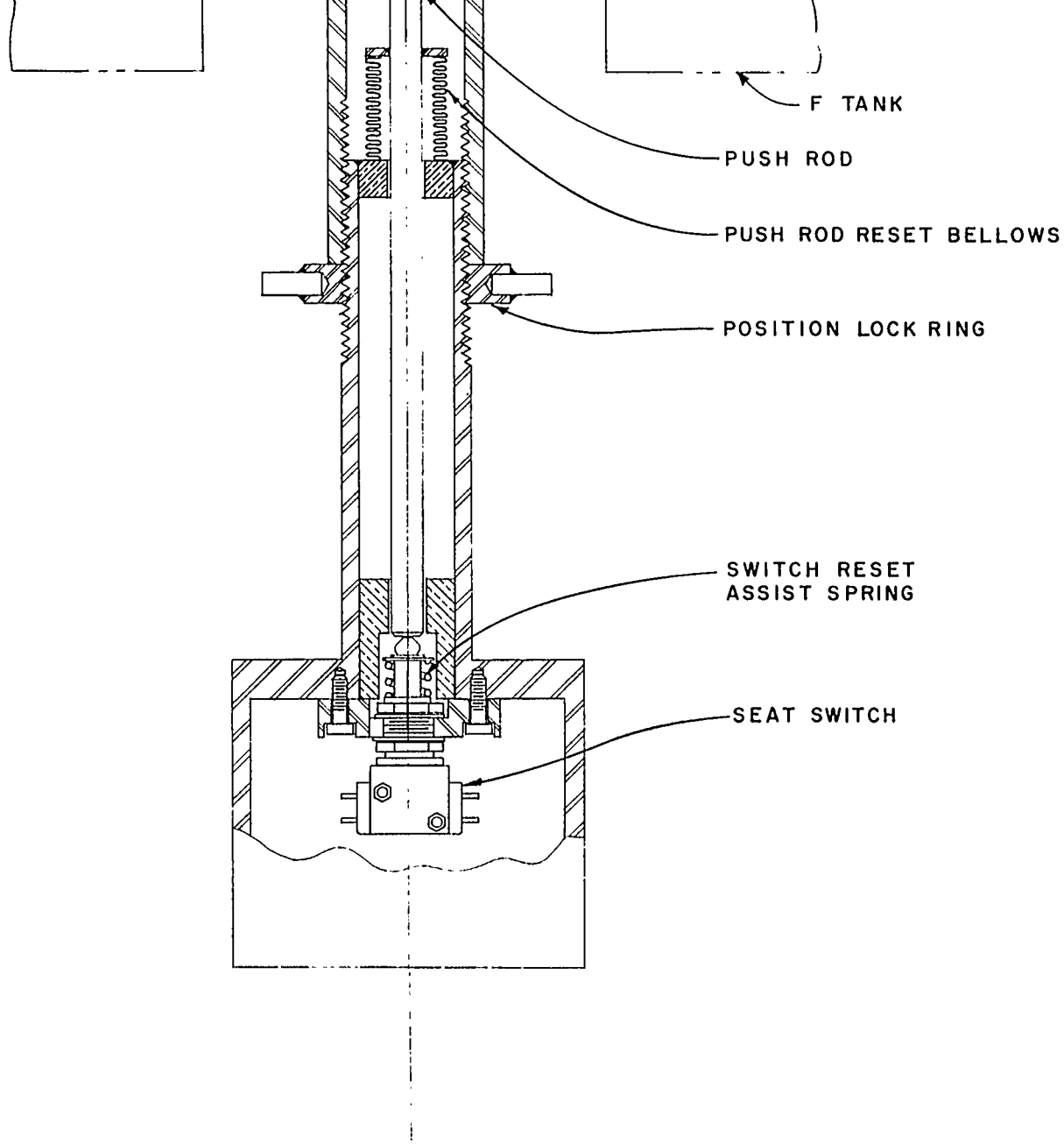

Fig. 5.3.8. Shock Absorber Assembly for the LITR Shim Rods

A 1 1/2-in.-thick steel plate platform elevated 4 ft 5 3/4 in. above the top plug by four stanchions serves as the bed-plate for the motors and gear reducers for the shim and regulating rods (see Fig. 5.2.4).

A bearing-support grid suspended from the bottom of the top plug (Item No. 15, Fig. 5.2.4) contains the lower guide bearings for the shim and regulating rods which are necessary to prevent excessive whip or side lash of the drive rods during operation. The bearing support grid is supported by a guide ring mounted on the upper flange of tank section "B" (see Fig. 5.2.4, Item No. 19). The bearing support grid is usually referred to as the "spider". The spider and guide ring are designed to present minimum obstruction to the flow of the reactor cooling water and maximum rigidity for lateral location of the bearings. Bullet-shaped dowel pins are provided on the guide ring to facilitate assembly of the two units and to ensure proper alignment (Fig. 5.3.9).

The spider is attached by four supporting tubes to the underside of the top plug so that it is part of the top-plug assembly and is removed from the reactor tank along with the top plug during servicing of the reactor. A spring-loaded connection joins the spider and the support tube. When the bearing-support grid is positioned in the reactor tank, these springs produce a downward thrust of 100 lb each and compensate for tolerance or dimensional differences between the top plug and the guide ring. Also, this spring mechanism overcomes any tendency for vibration of the spider due to water flow through it. The spider and guide ring are made of stainless steel which has been heat treated for maximum corrosion resistance.

5.3.3. Spent-Fuel Storage Racks

Spent fuel from the LITR core is temporarily stored in 2 seven-place in-tank racks and allowed to decay about eight weeks before removal from the reactor vessel. The racks also provide storage for removable beryllium reflector elements and experiment-rig adapters. The tracks are suspended from the flange at the junction of "A" and "B" tanks, one on the north side and the other on the south side. The north rack has an additional four-place rack suspended from it; when both the larger and smaller

ORNL DWG. 67-5010

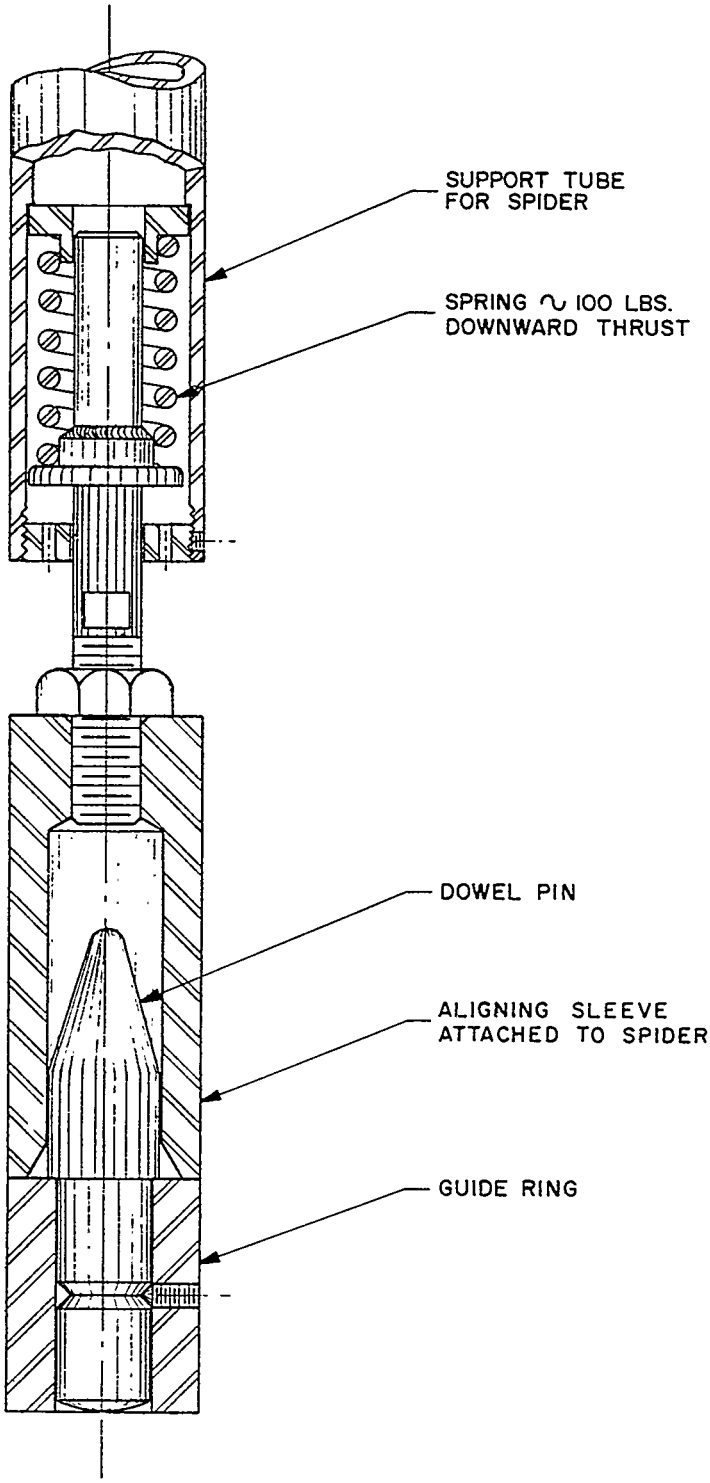

Fig. 5.3.9. Spider Alignment Device

racks contain fuel, there is a vertical overlap of about 8 in. in the fuel sections. All of the racks are 40 in. high and made of 1/2-in. stainless tubing with 1/8-in.-thick stainless support plates at the bottom.

5.3.4. Fuel-Element Support Grid

The square lower end boxes of the fuel elements seat into a support grid (Fig. 5.3.10) which rests upon ledges extending from the east and west sides of the lower grid support casting. This grid was designed to accommodate 37 fuel elements and/or removable reflector elements and has passage holes for 8 shim-safety rods. Adapters can be inserted into the shim-safety rod passage holes so that fuel or reflector elements can be positioned in them also. In the LITR, all but three of the shim-safety rod passage holes contain such adapters.

The grid is machined from a single casting of Alcoa aluminum alloy 356-T7A. Its outer dimensions are: length, 28.6 in.; width, 15.1 in.; and height, 6 in. Locking devices built into each of the four, corner, fuel-element positions automatically lock the grid in place when fuel elements are in the corner positions. Figure 5.3.11 illustrates how insertion of fuel end boxes causes locking cams to swing into slots in the plates which support the grid on two sides (see Fig. 5.2.4). These two plates are referred to as "skirt plates". (See Fig. 5.3.12.)

When the grid is lowered into position, it passes between the skirt plates which push the cams inward from their normal, free-hanging position until the grid is completely seated. When the grid is seated, the cams again swing outward into cut-outs in the skirt plates and assume their free-hanging position. When the standard end boxes of fuel elements or other core pieces enter the corner positions, the cams are pushed farther outward into the recesses in the side skirt plates and prevent upward motion of the grid.

Although the grid, as designed for and installed in the MTR, is relatively easy to remove, the same type of grid in the LITR cannot be readily removed because it will not pass freely up through the sheet-aluminum box which surrounds the core to retain the permanent beryllium reflector.

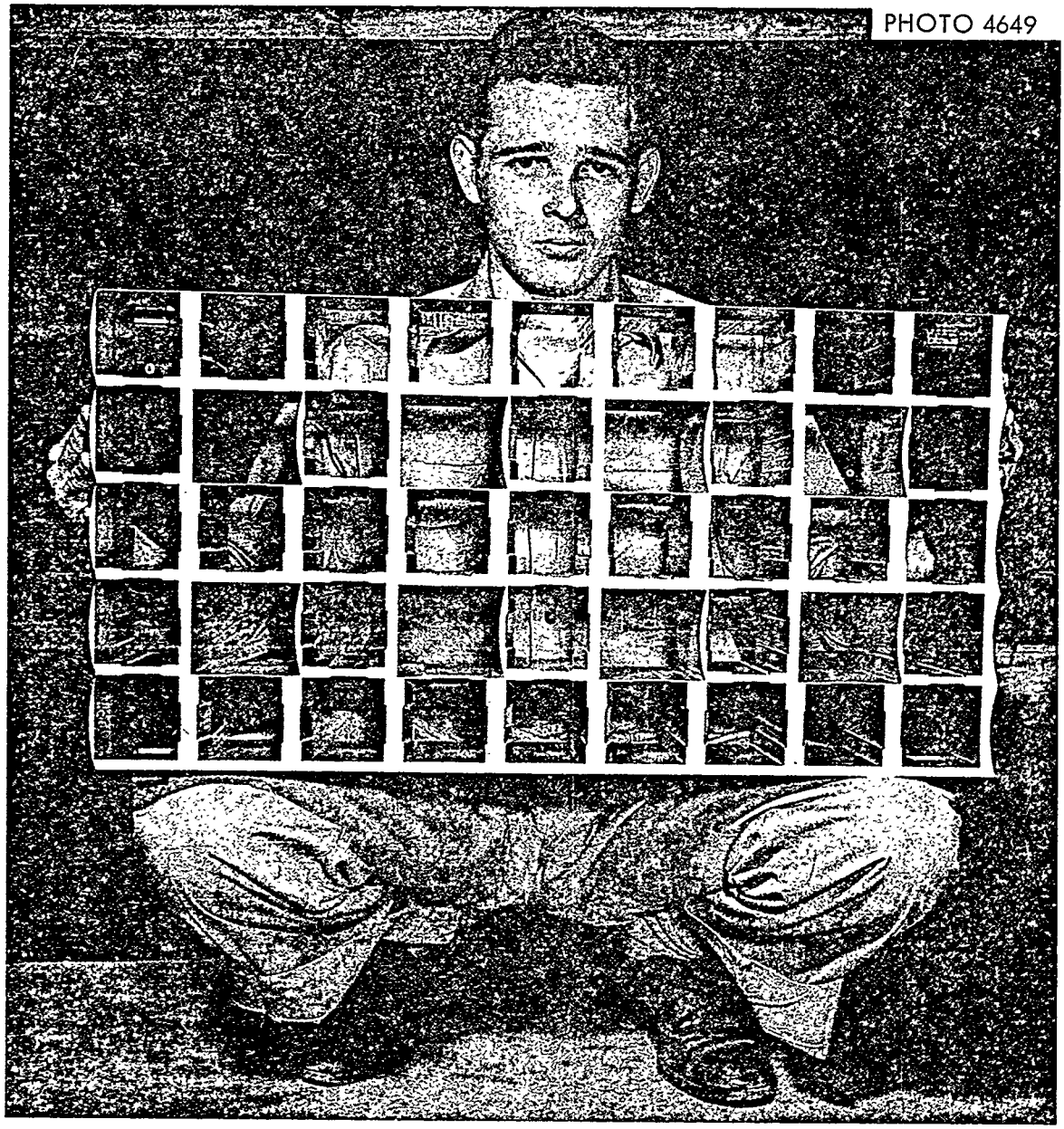

Fig. 5.3.10. LITR Fuel-Element Support Grid

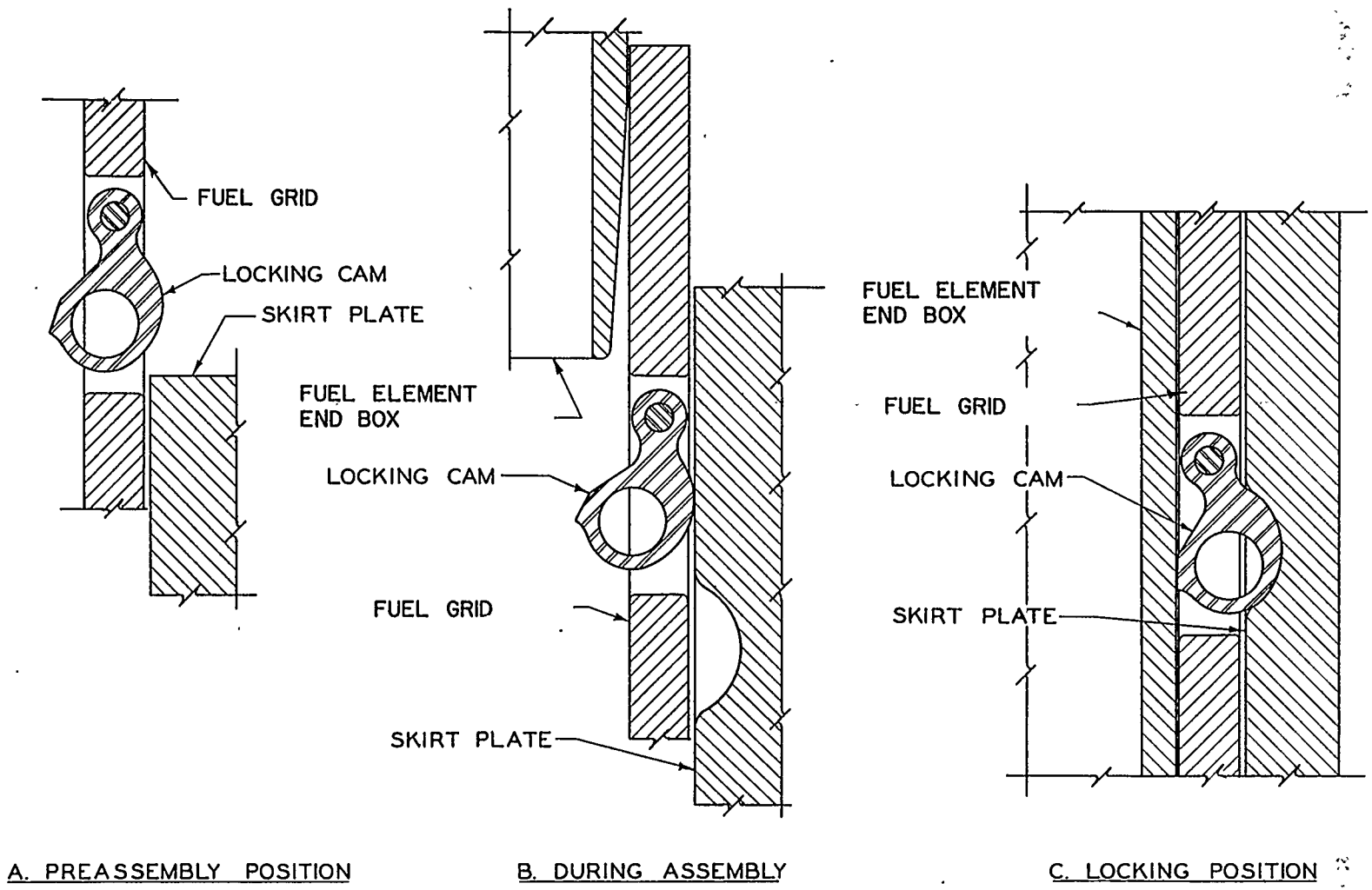

Fig. 5.3.11. Locking Mechanism for LITR Fuel-Element Support Grid

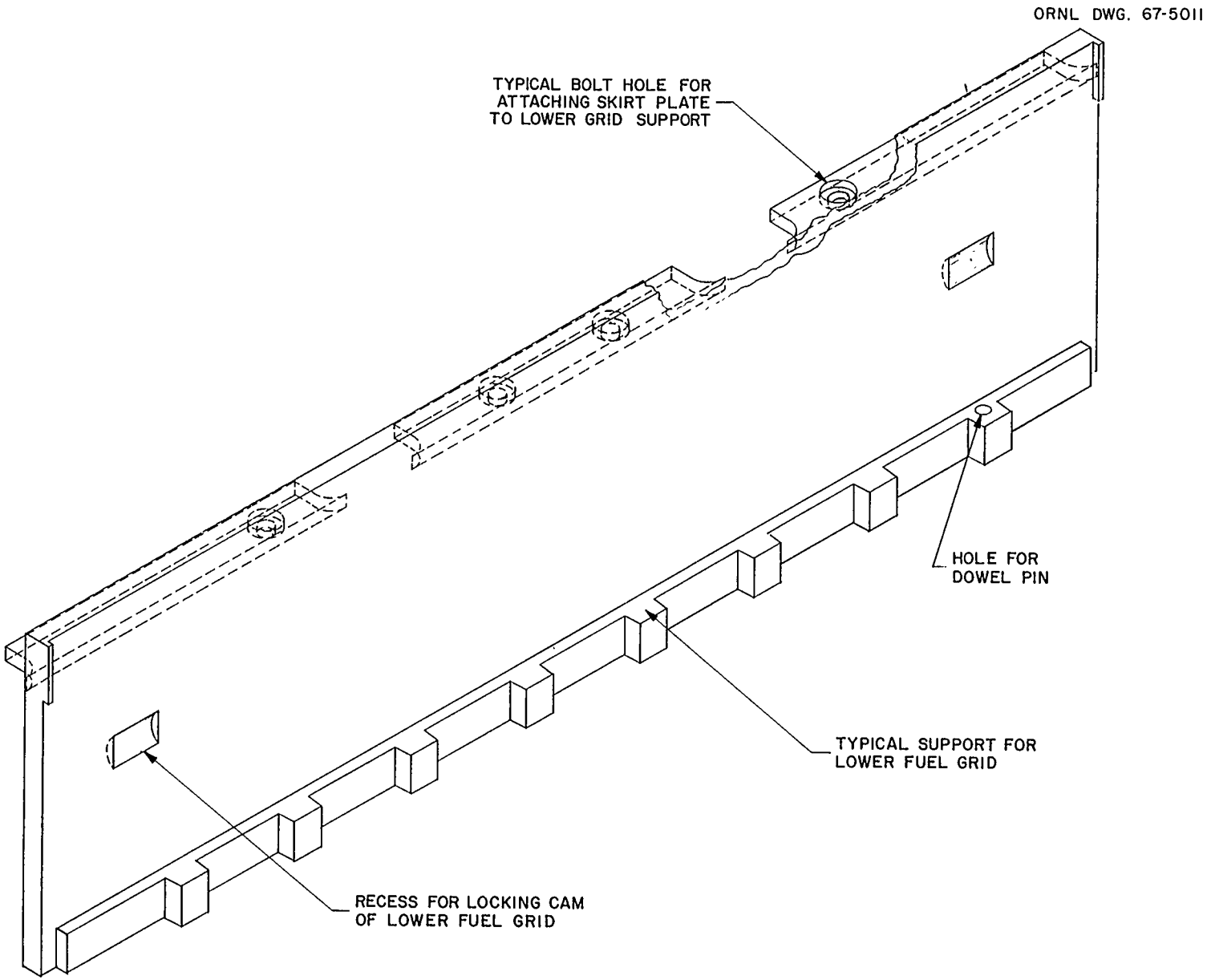

Fig. 5.3.12. Skirt Plate

5.3.5. Upper Assembly of Grids

When the reactor is assembled for operation, the upper fuel-element grid (Fig. 5.3.13) fits over the top of the central part of the core and holds down those fuel elements which are adjacent to the shim-safety rods to ensure that motion of the shim rods does not displace fuel elements. A second grid positioned 18.5 in. above the upper fuel-element grid contains the upper guide bearings for the shim-safety rods. The two grids are connected together by a frame to form the "upper assembly of grids".

During servicing of the reactor core, the upper assembly of grids is lifted and stored within the upper part of the reactor tank by suspending it from a removable rack attached to the top flange of the tank. A combined lifting and locking mechanism on the assembly (Item No. 26, Fig. 5.2.4) consists of a lifting bar at the top of the assembly, which is attached by vertical rods to pivoted arms. When the assembly of grids is seated, the pivoted arms move four roller-type locking pins under stainless steel bars bolted to the upper grid-support casting. When an upward force is applied to the lifting bar by a handling tool, the pivoted arms move the locking pins from under the locking bars and free the assembly to be moved upward.

Except for the bolts, nuts, and lifting assembly, all of which are made of austenitic stainless steel, the upper assembly of grids is 6061 ST aluminum.

When in the operating position, the north and south edges of the upper fuel-element grid sit upon ledges which are part of the upper grid-support casting. Proper alignment is ensured by two vertical stainless-steel positioning dowels set in the support ledges of the upper grid-support casting. A circular hole in the bottom of one end of the upper fuel-element grid and a slotted hole in the other end fit over the dowels when the assembly is in place.

The upper shim-safety rod bearing assemblies fit into circular slotted holes in the upper bearing grid and are held in place by a clamping plate bolted to the grid. Each bearing contains four spring-loaded captive plates into each of which are set three stainless steel rollers which

ORNL DWG. 67-5012

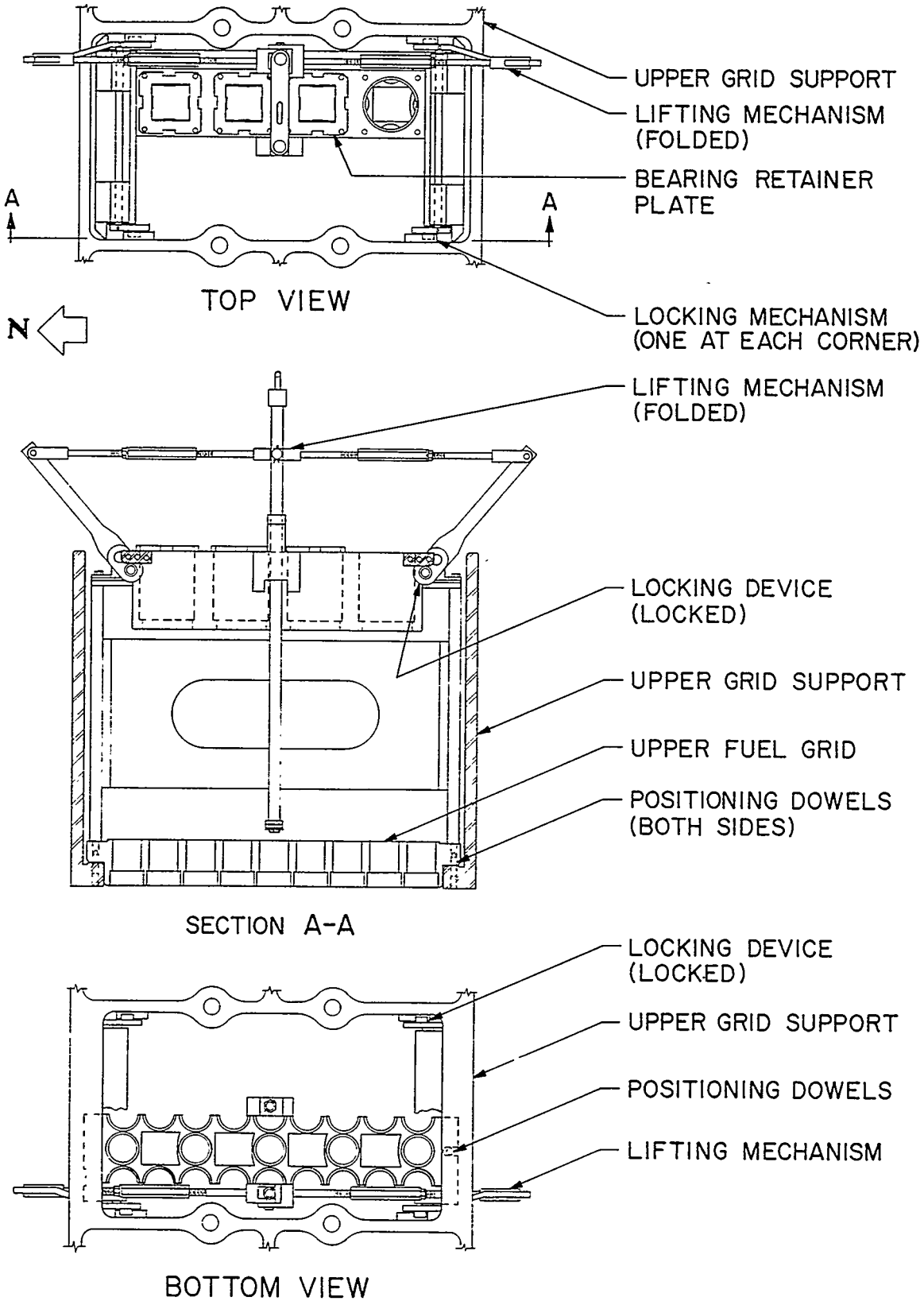

Fig. 5.3.13. Upper Assembly of Grids

have graphite bearings. When a shim-safety rod is within the bearing assemblies, the spring-loaded plates press the rollers against the sides of the rod to provide side support and alignment.

5.3.6. Supports for the Upper and Lower Grids

The lower fuel-support grid is both positioned and supported along the east and west sides by two skirt plates which, in turn, are supported by the lower grid-support casting (Fig. 5.2.4, Item No. 43). The skirt plates were made of either 2-S or 3-S aluminum. Item No. 43 shows the relationship of the lower fuel-support grid, the skirt-plate, and the lower grid-support casting. Dowel pins are used to positively position the lower grid on the skirt plates.

The lower grid-support casting also serves another function--that of supporting the permanent beryllium reflector. This support casting is quite large and heavy. The outside diameter is 54 1/8 in. and the weight is about 2000 lb. It was made of Alcoa casting alloy 356-T7A. The T7A classification denotes a specific aging process to give highest tensile properties. The method of attaching the lower grid-support casting to the lower flange of section "D" of the reactor vessel is discussed in Section 5.3.1 of this report.

5.3.7. Lower Shim-Safety Rod Bearing Grid

The lower shim-safety rod bearing grid is located ~20 in. below the bottom of the fuel-support grid and is held by a cradle (Fig. 5.3.14 and Items 45 and 47 in Fig. 5.2.4) which is suspended from the lower grid-support casting. The cradle is a casting (Alcoa 356-T7A) bolted to the lower grid-support casting at four mating pads, which were machined to be parallel within 0.005 in. and doweled at two diagonally opposite pads to ensure alignment. Inside the cradle are ledges machined to be parallel to the top surface of the lower grid-support casting. The lower shim-safety rod bearing grid is bolted to these machined ledges.

Although the grid has keyed sockets for eight stainless steel bearing assemblies, only three are installed. Exact information about these bearings is no longer available; however, they are most probably the same type that are in the upper assembly of grids (see Section 5.3.5).

ORNL DWG. 67-5013

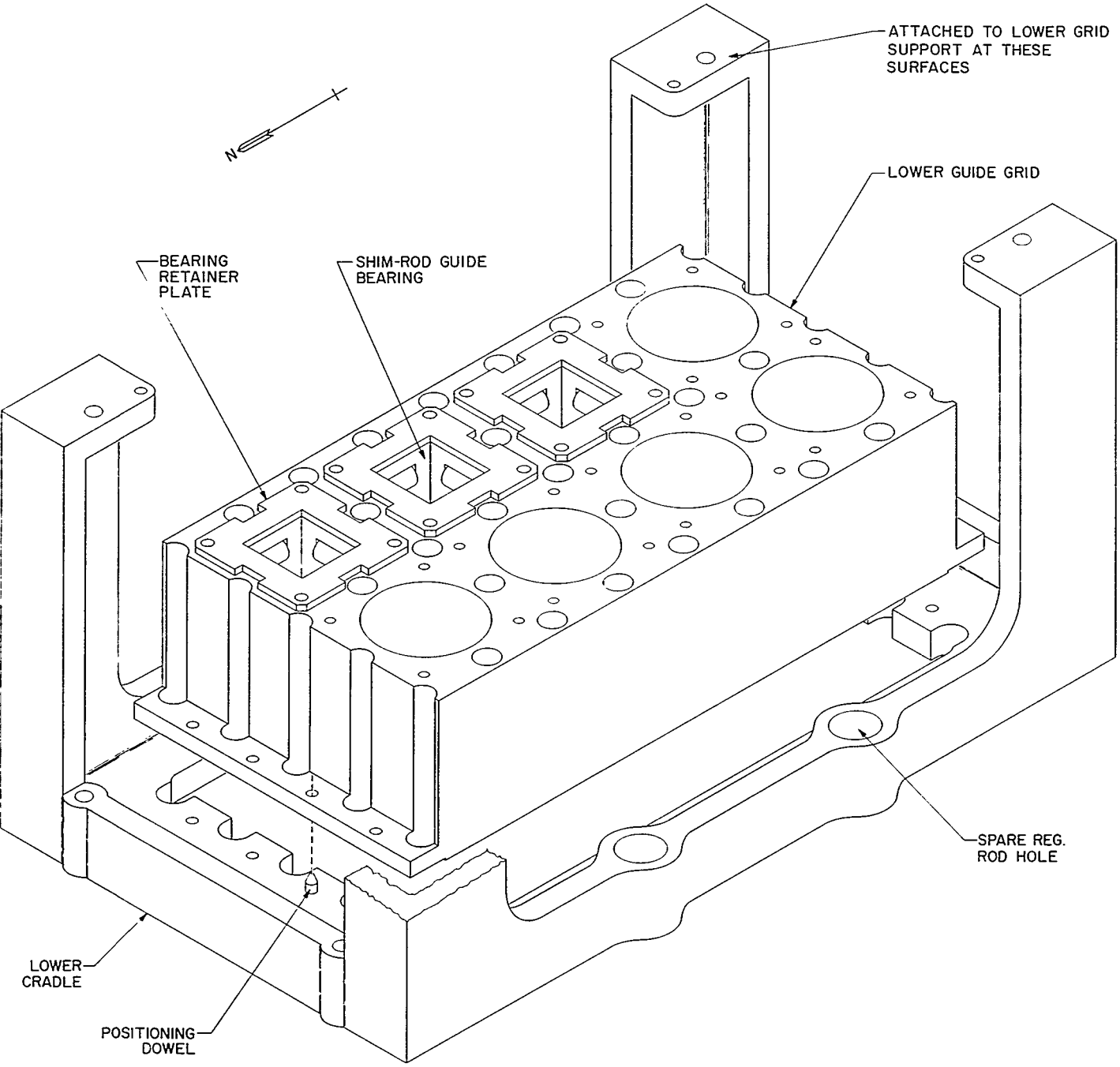

Fig. 5.3.14. Lower Shim-Safety Rod Bearing Grid

5.3.8. Shim-Safety-Rod Shock Absorbers

The three hollow stainless steel shock-absorber cylinders (dash-pots) for the shim-safety rods are held in sleeves built into the bottom (Section "F") of the reactor tank (Fig. 5.3.8 and Item No. 49 of Fig. 5.2.4). The inside diameter of the cylinders is 2.814 in. The round lower stainless steel sections of the shim rods are tapered over a 6-in. length from a diameter of 2.689 in. at the bottom to 2.781 in. and serve as the shock-absorber pistons. When a shim-safety rod is dropped, the piston entering the cylinder momentarily traps water which cushions the impact of the falling rod.

The shock-absorber cylinders have square flanges at the tops which are gasketed and bolted to the top of the upper plate of reactor-tank section "F". A bellows-sealed 0.374-in.-diam stainless-steel rod extends from the lower surface of reactor-tank section "F" up through a hole drilled through the bottom of each shock-absorber cylinder. When a shim-safety rod piston is seated in the cylinder, it pushes the 0.374-in.-diam rod downward and operates an electrical switch which completes a circuit to indicate that the shim-safety rod is seated.

5.4. Experiment Facilities and Ionization-Chamber Tubes

5.4.1. Introduction

Built into the LITR are six horizontal beam tubes (see Fig. 5.4.1) which penetrate to the core box, two horizontal pneumatic tubes adjacent to the core box, and four nearly vertical slanted tubes which penetrate the shield to the reactor tank. In addition to these specific facilities, up to a total of 24 fuel-element-size spaces in the core box are available for experiment rigs.

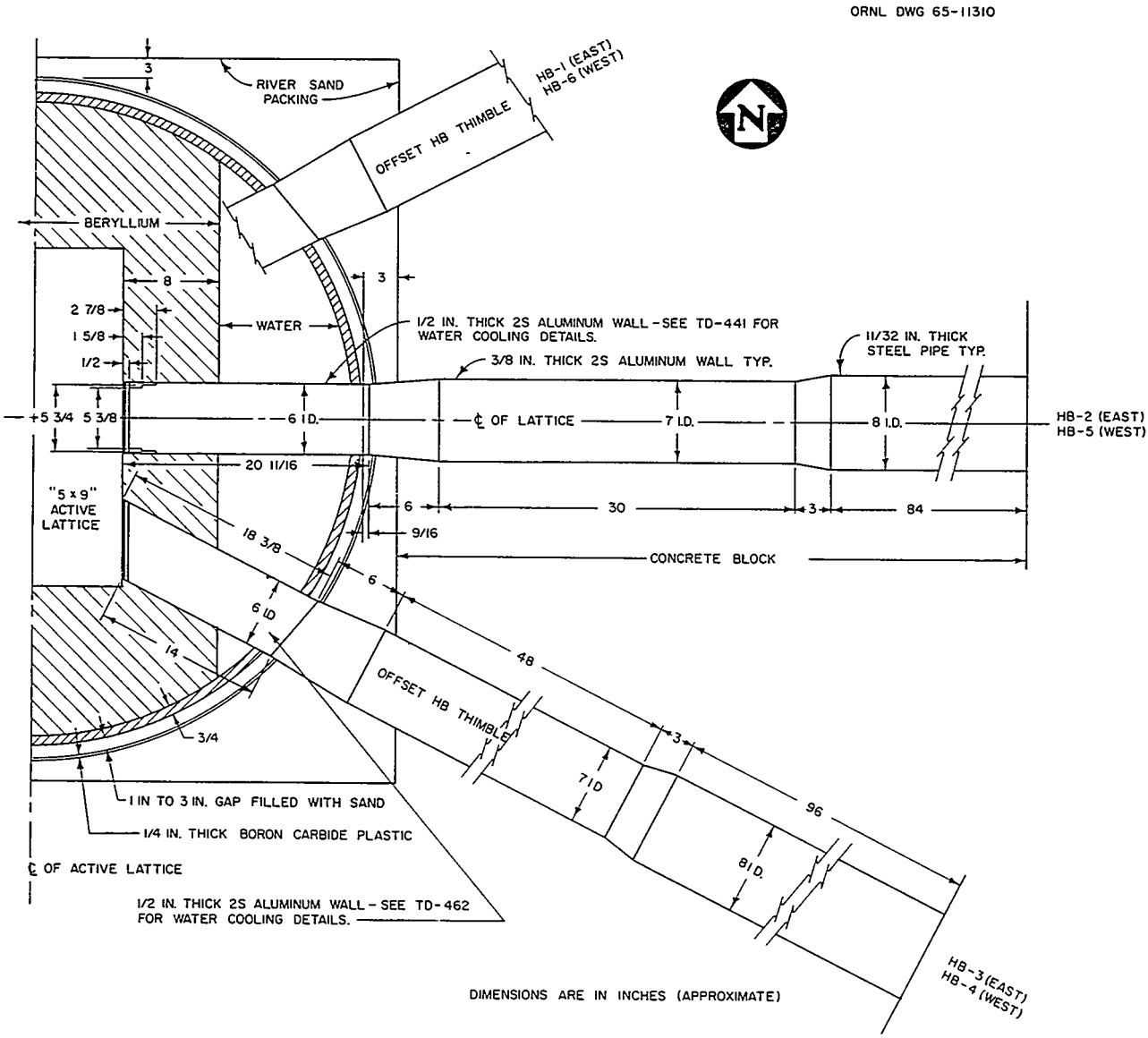

Fig. 5.4.1. LITR Beam Hole Dimensions

5.4.2. Beam Tubes

The six horizontal beam tubes extend radially from the reactor core box to the east and west experiment rooms (Figs. 5.2.6 and 5.2.4). The tubes have a 6-in. inside diameter at the inner end and are stepped in diameter to 7 in. and 8 in. as shown in Fig. 5.2.6. The 6-in.- and 7-in.-diam sections of each beam tube are made of aluminum; the 8-in.-diam section and the 7-in. to 8-in. transition section are made of carbon steel pipe. Narrow steel plates welded to the transition piece extend over the 7-in. aluminum section to maintain fair alignment. Lead wool wrapped around the junction prevents sand in the shield from entering the beam tube. The outer one-foot lengths of the 8-in.-diam steel sections of the beam tubes were welded on at the time the reactor power was increased to 1.5 Mw. Because of this and the type of transition from aluminum to carbon steel near the midlength of the tubes, the alignment of the tubes is considerably less than perfect.

To prevent galling between the aluminum sections of the beam tubes and the aluminum cladding on shield plugs or experiment rigs, each tube has been equipped with a removable full-length, stainless-steel, open-ended liner that extends up to the 6-in.-diam section.

Two of the beam tubes are perpendicular to the sides of the core box and the other four intersect it at an angle of 63°. The centers of the beam tubes are 4 in. below the horizontal centerline of the core. Since the inner ends of the tubes are within the permanent beryllium reflector, they are not well cooled by the reactor water but are only wetted.

The inner ends of the two center beam tubes on each side of the core box (HB-2 and HB-5) are stepped in diameter from 6 in. to 5 3/4 in. over a distance of 2 3/8 in. During the time that the LITR tank was being used for the hydraulic mock-up for the MTR, these reduced diameters at the inner end of the tube served as a mounting frame and viewing aperture for a plastic window. In converting the mock-up to a reactor, an aluminum disc was welded over the end of each of these tubes to provide gasket-free seals.

The beam tubes can accommodate neutron collimators, loops, pneumatic tubes, or static irradiation rigs.

5.4.3. Pneumatic Tubes

Two 1-in.-diam, horizontal, aluminum through-tubes on the north side of the core box serve as sleeves for two pneumatic tubes (Fig. 5.4.2). Figure 5.4.3 is a schematic drawing of the pneumatic tubes and their accessories. Figure 5.4.4 is a sketch of the magnesium-aluminum alloy target capsule used in the pneumatic tubes. The thermal neutron flux in these facilities is about 1×10^{13} n cm^{-2} sec^{-1}.

5.4.4. Core-Box Positions

The basic core of the LITR consists of 18 fuel elements and three shim rods in a 3-space by 7-space array in the northeast portion of the core box (Fig. 5.2.6). The remainder of the core-box positions, 24, may be occupied by experiment rigs, by removable beryllium reflector elements, or by fuel elements located to enhance the neutron flux in adjacent experiment rigs or beam tubes. When desirable, experiment rigs may occupy spaces normally containing fuel elements in the 3 x 7 core array as long as the fuel can be positioned elsewhere and the effectiveness of the shim-safety rods is not impaired.

The original upper assembly of grids covered the whole core box and limited the number of experiment rigs having communication and coolant leads to five, since they could only be positioned in unused shim-safety rod positions where access was available through the upper shim-safety-rod bearing grid. There, also, rigs had to be dismantled each time that servicing of the reactor core was necessary.

The present upper assembly of grids (see Section 5.3.5) permits essentially permanently installed lead tubes in as many as 36 core-box positions. Thirteen new openings through the side of section "A" of the reactor tank and through the cover flange on one of the large openings used as an inlet water line in the mock-up have been provided for experiment rig access tubes. Figure 5.4.5 is a photograph of the inside of the reactor tank showing experiment lead tubes descending from the side of the reactor tank at the top down to the core box. Figure 5.4.6 is a sketch of a core-box facility tube and Fig. 5.4.7 is a schematic drawing of an

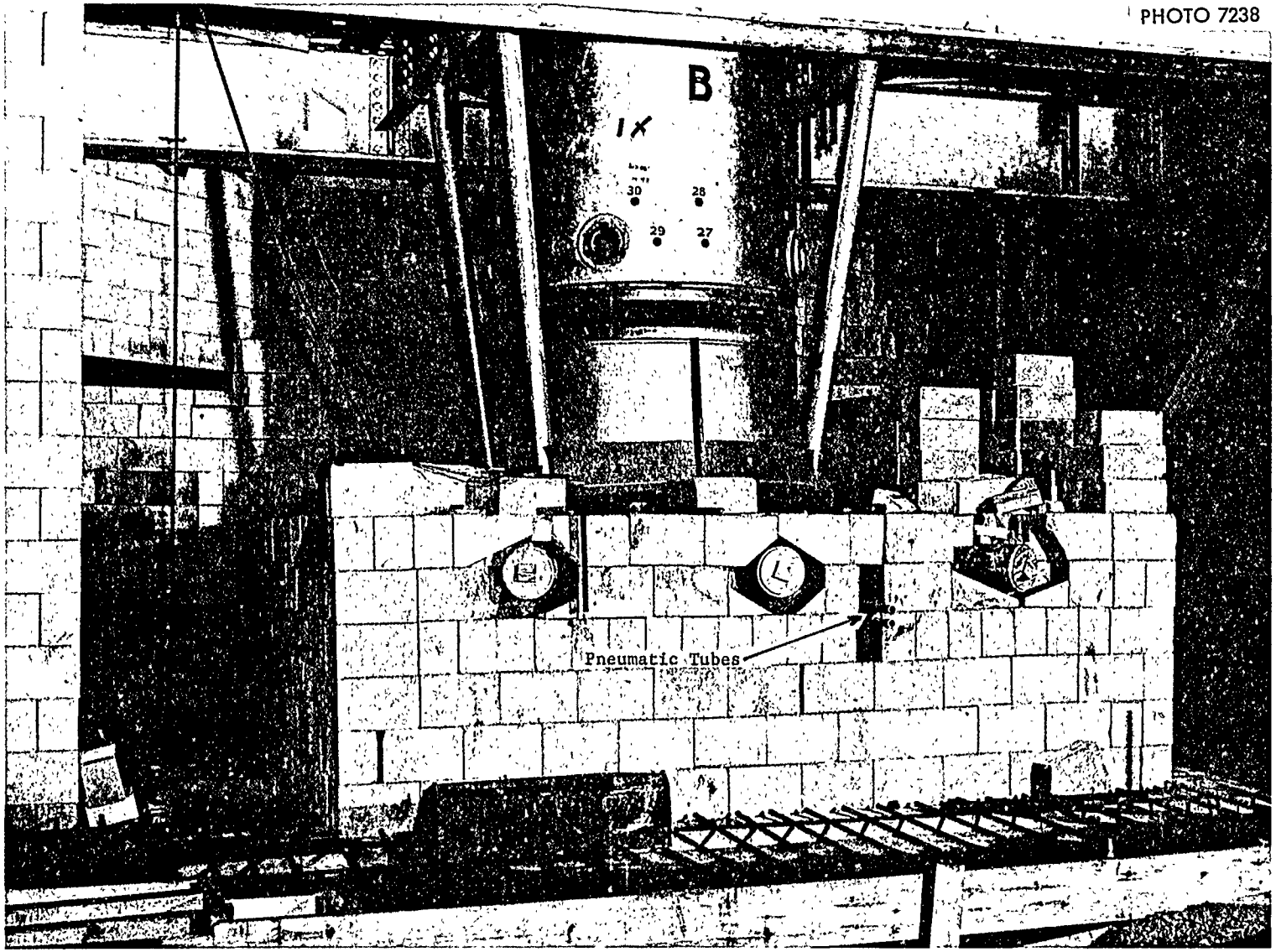

Fig. 5.4.2. View of Reactor Tank During Construction

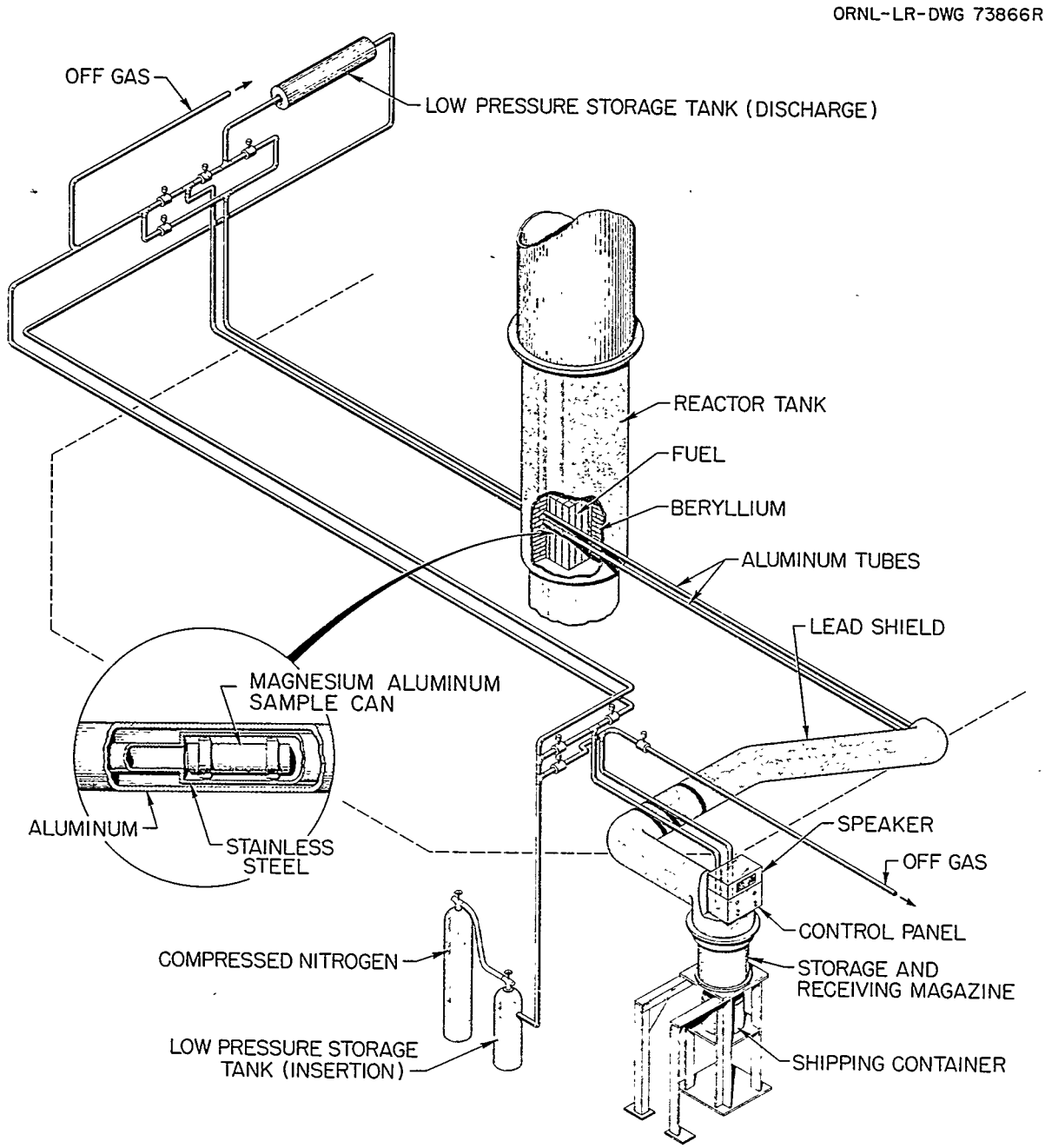

Fig. 5.4.3. LITR Pneumatic-Tube System

ORNL DWG. 65-1903R

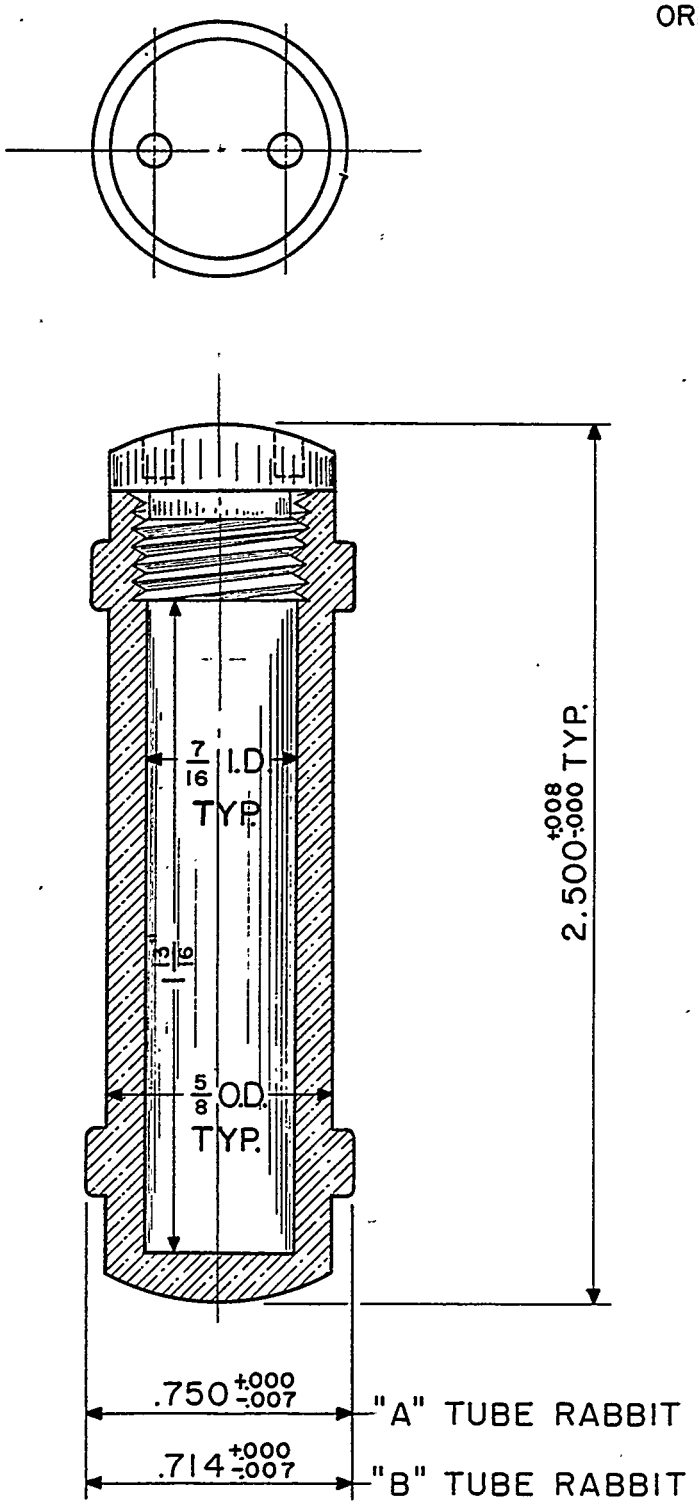

MTL: MAGNESIUM ALUMINUM

Fig. 5.4.4. Sample Capsule for Pneumatic Tube

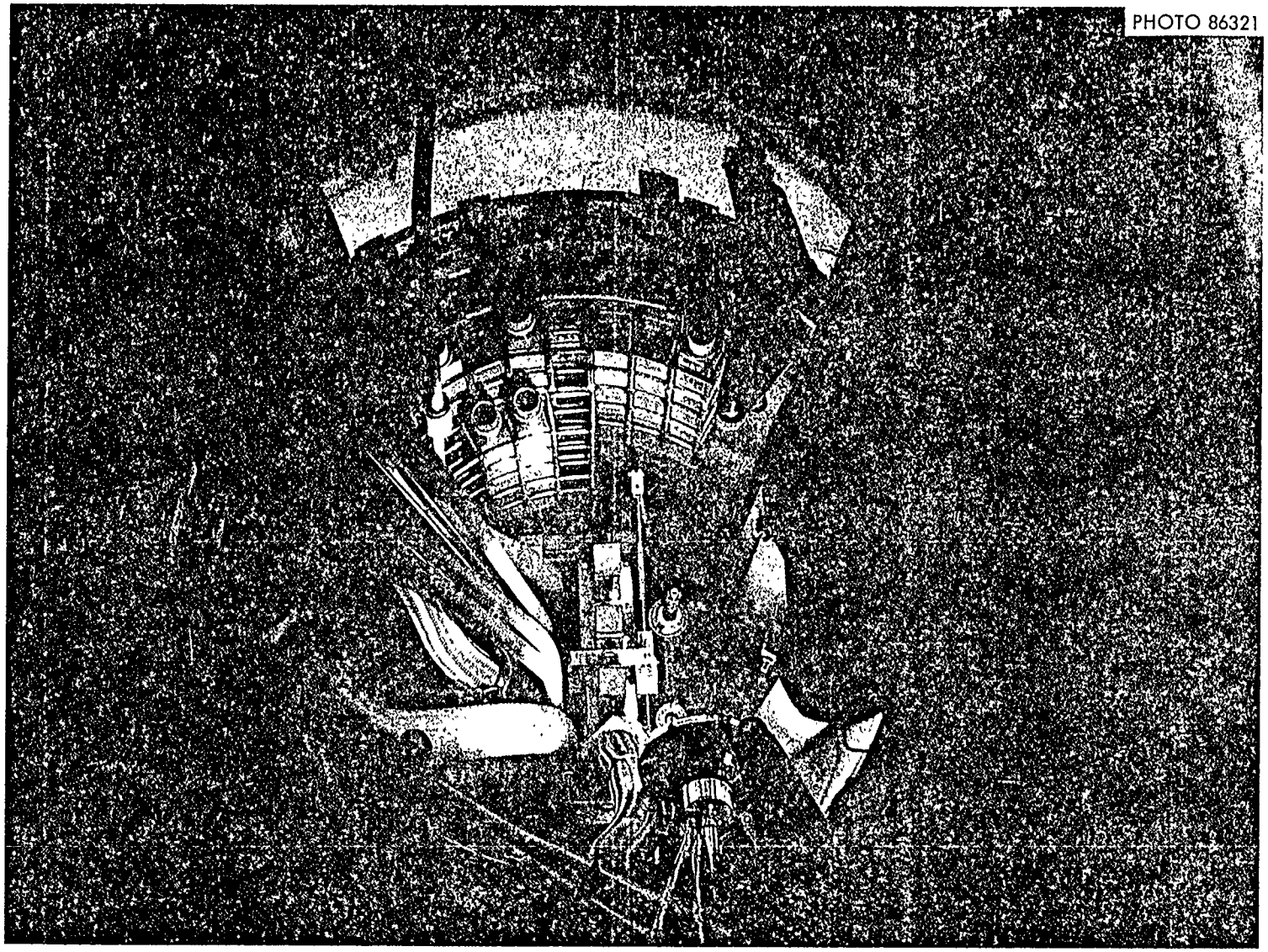

Fig. 5.4.5. Experiment Tubes in the LITR Vessel

ORNL-LR-DWG 68513

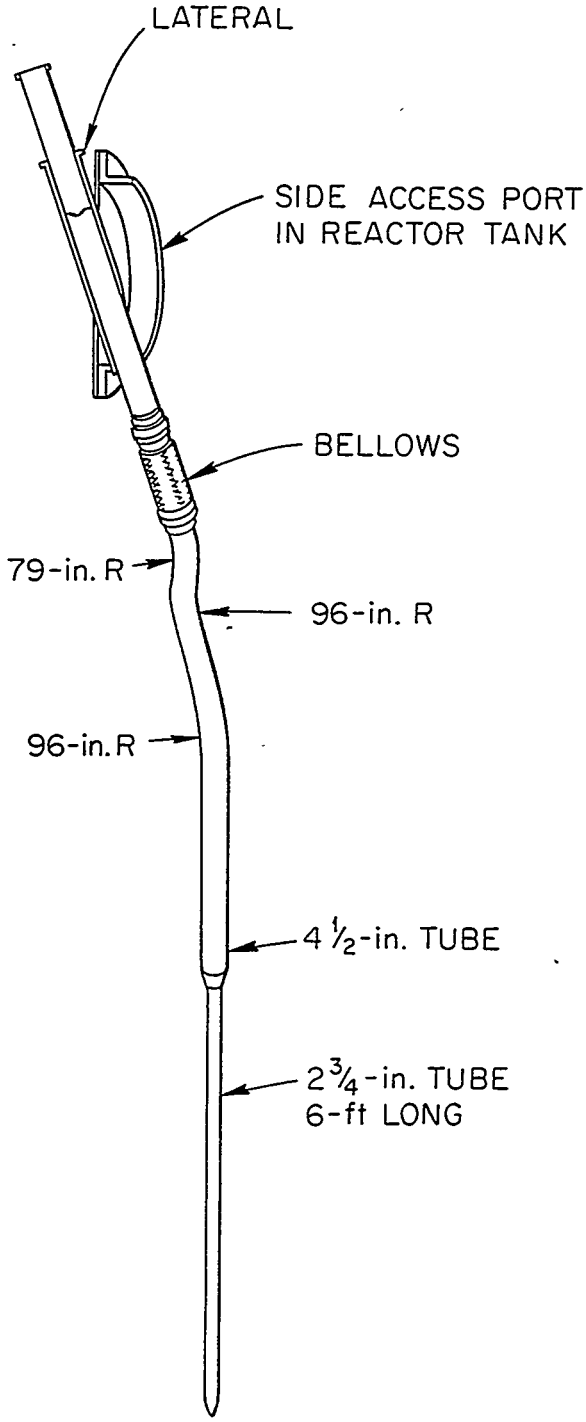

Fig. 5.4.6. Core-Box Facility Tube

ORNL-LR-DWG 68038R2

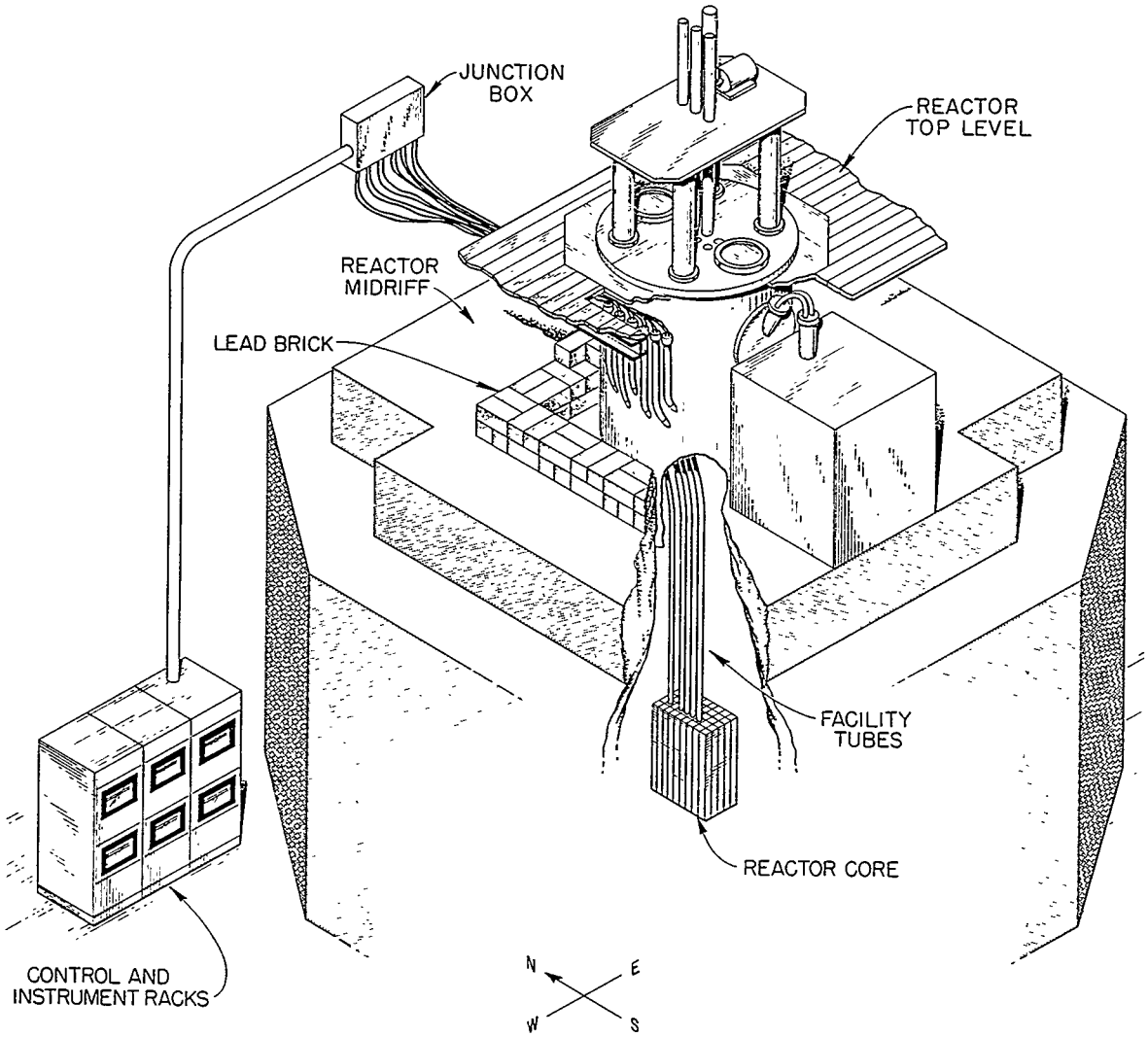

Fig. 5.4.7. Typical Core-Box Experiment Installation

installed rig and its controls. The maximum thermal neutron flux available for experiment rigs in the core box is ~4 x 10^{13} n cm^{-2} sec^{-1}; the maximum gamma heating is ~1.6 w per gram.

The core-box positions can accommodate loops and both monitored and unmonitored irradiation targets. Although only a single core-box space (~3 x 3 x 24 in.) is normally used for an experiment rig, it is possible to use two or more adjacent spaces.

5.4.5. External Irradiation Tubes

Four 3 3/8-in.-ID aluminum tubes extend from a ledge of the reactor shield within the second-floor room to the outer wall of section "D" of the reactor tank at the horizontal centerline of the core. The tubes are canted 7 1/2° from vertical and are spaced 90° apart around the reactor tank (Fig. 5.4.1). The bottom ends of the tubes terminate at an angle of 7 1/2° so the irradiation space is narrow and tapered. The tops of the tubes are stepped from 3 3/8 in. to 4 3/8 in. diam for the top 1 ft of length to accommodate a 4-in.-diam by 1-ft-long shield plug.

The maximum thermal neutron flux in these facilities is 5 x 10^{11} n cm^{-2} sec^{-1}. One of these facilities is used as a reactor-control fission chamber access.

5.4.6. Ionization-Chamber Tubes

Six aluminum tubes which extend from the northwest corner of the subpile room to the midsection of section "D" of the reactor tank (Fig. 5.4.8) accommodate ionization chambers required for control of the reactor. These tubes open into the passageway between the reactor control room and the subpile room. The inside diameter of the tubes, proceeding from left to right in Fig. 5.4.8, is 2 3/8, 3 1/4, 4 3/8, 3 3/4, 3 1/8, and 2 1/4 in., respectively.

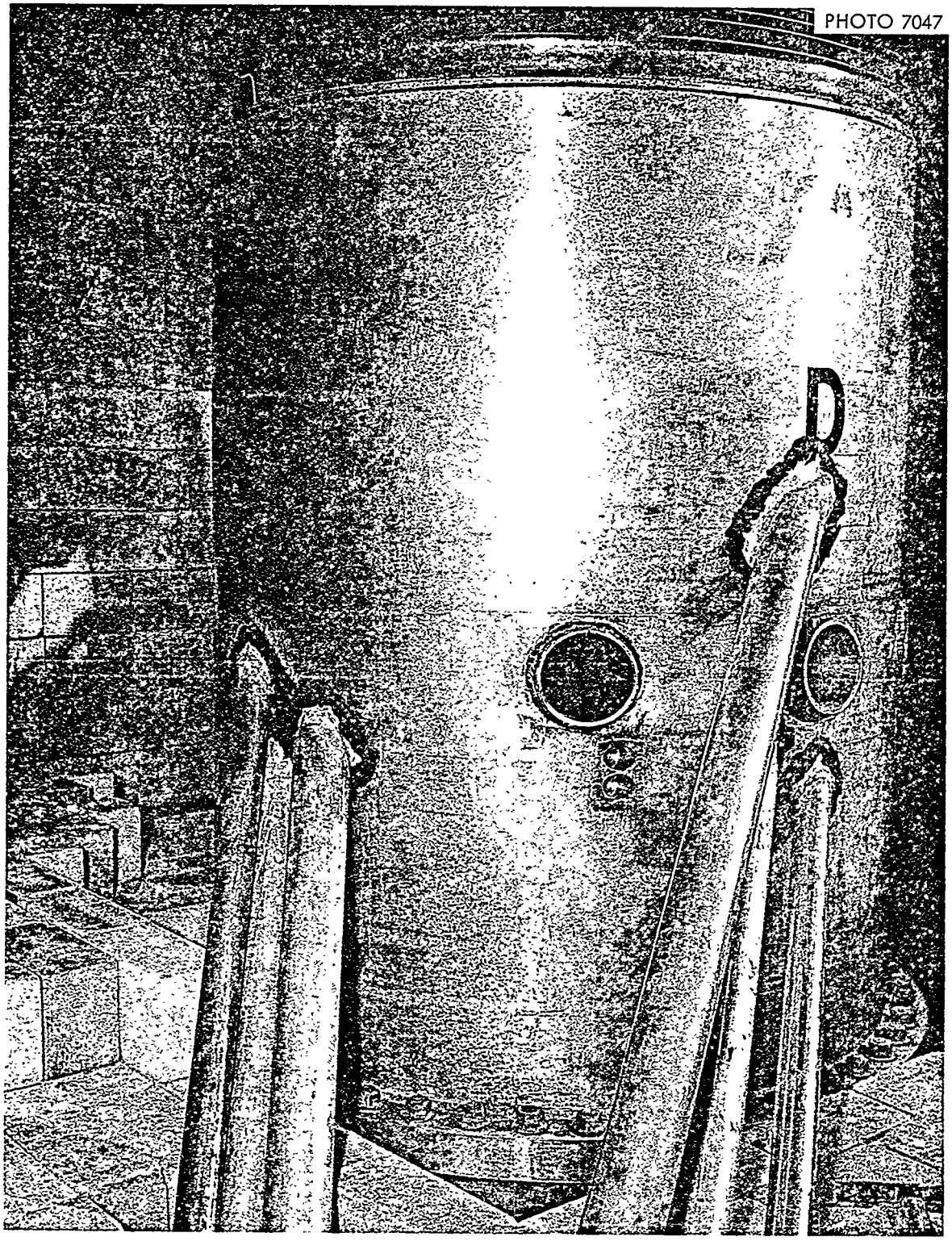

Fig. 5.4.8. View of Ionization-Chamber Tubes

6. REACTOR COOLING SYSTEM

6.1. Introduction

The 3-Mw LITR is cooled by a 1200-gpm flow of light water downward through the core. The coolant loop includes the reactor, seal tank, pumps, heat exchangers, and strainer. By-pass loops are used for filtration and demineralization.

6.2. Coolant Flow Path

Figure 6.2.1 is a flow diagram of the water recirculation system. At a static pressure slightly greater than 70 psi (gauge) the pumps discharge the water through an underground 8-in.-diam aluminum pipe to the water-to-air heat exchangers. From there, it goes through an 8-in.-diam underground aluminum pipe to the shell-and-tube water-to-water heat exchanger and the basket-type, mild-steel strainer and then by underground 8-in. mild-steel pipe (protected from external corrosion by a bitumastic coating) to a barytes-concrete-shielded riser up to the second floor level. From there, the 8-in.-diam pipe continues to the reactor tank. The section from the riser to the tank is shielded with lead. The flow-monitoring orifice is in the riser.

At the reactor tank top, the static pressure usually is just equal to atmospheric. This loss of static pressure is due to the change in elevation from 838 1/2 ft at ground level, where the pump is, to 863 ft at the tank top and to frictional losses in the line. In the reactor tank, the flow is downward through the core and removable beryllium reflector into the "E" section of the tank.

Then the water enters the exit-water piping and rises back up through the reactor tank to the side of the "A" section near the inlet water penetration. The exit-water piping begins in the "E" section as eight parallel 2-in.-diam aluminum pipes which originate at four different elevations to avoid stratification of the water and to prevent gas accumulation below the core. These 2-in.-diam pipes rise through holes in the core-and-reflector support casting which were originally used to hold the lower end boxes of removable reflector pieces in the mock-up. After passing

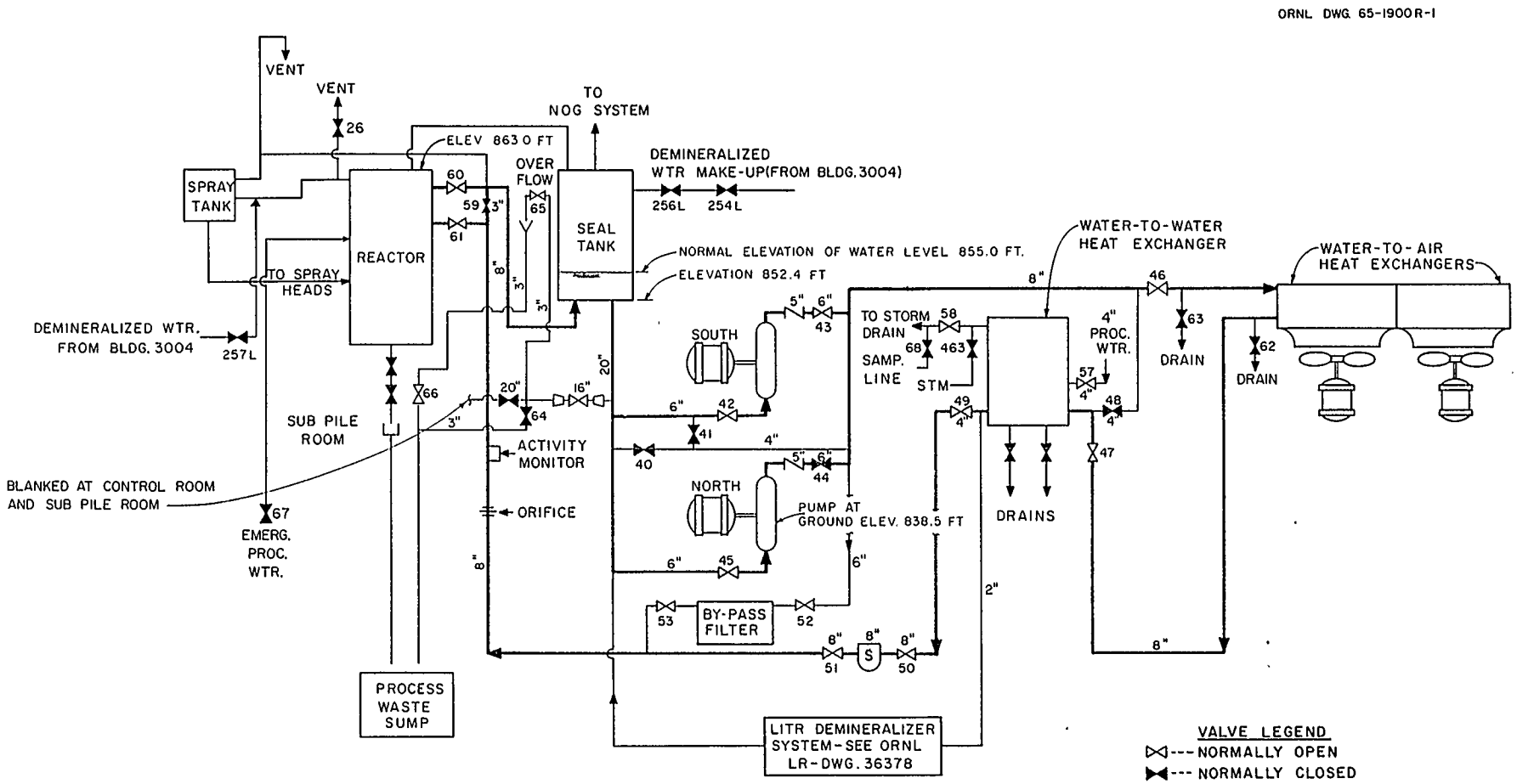

Fig. 6.2.1. Flow Diagram of the LITR Primary Water System

through the support casting, there is a transition from the eight 2-in. pipes into two 6-in.-diam aluminum pipes (four 2-in. pipes to each 6-in. pipe) which rise to the "A" section where they join a combined expansion joint and transition piece. From the top of the transition piece, the water flows through an 8-in.-diam pipe to the exit penetration in the side of the "A" section. Figure 6.2.2 is a sketch of the combined expansion joint and transition piece showing how a neoprene diaphragm is used to allow for expansion or contraction of the piping.

One advantage of routing of the exit water line back up through the reactor tank and of employing a syphon break is that the reactor is protected from losing too much water if a leak should occur in the external piping since the exit water line emerges from the tank far above the level of the core. A second advantage is a substantial reduction in the radiation level of the exit water due to ^{16}N by allowing an appreciable decay time before the water from the core emerges from the reactor tank.

The water overflows from the reactor tank through an 8-in.-diam lead-shielded aluminum pipe. Since the water flows downward after leaving the tank, the static pressure is less than atmospheric at the point where the water emerges from the reactor tank. At this point, the water system is vented to the atmosphere through a 1/2-in.-diam standpipe rising 22 ft above the top of the reactor tank. While water is flowing, air is continually pulled into the system at this point through the standpipe. This air is later released in the seal tank and is discharged to the off-gas system (see Section 6.3).

From the reactor tank the water flows through an 8-in.-diam aluminum pipe to the "seal" tank. Between the water level in the full reactor tank and the normal water level in the seal tank, there is a head difference of approximately 8 ft with the seal-tank level being lower. From the seal tank, the water flows through an underground 20-in.-diam steel pipe to the centrifugal pumps. This section of 20-in.-diam pipe is the only portion of the original hydraulic mock-up piping which is still in use. There is a 13-ft difference in elevation between the seal-tank water level and the pump suction. Also, the seal tank is vented to the normal-off-gas system through a 3-in. mild-steel line.

ORNL DWG. 67-5014

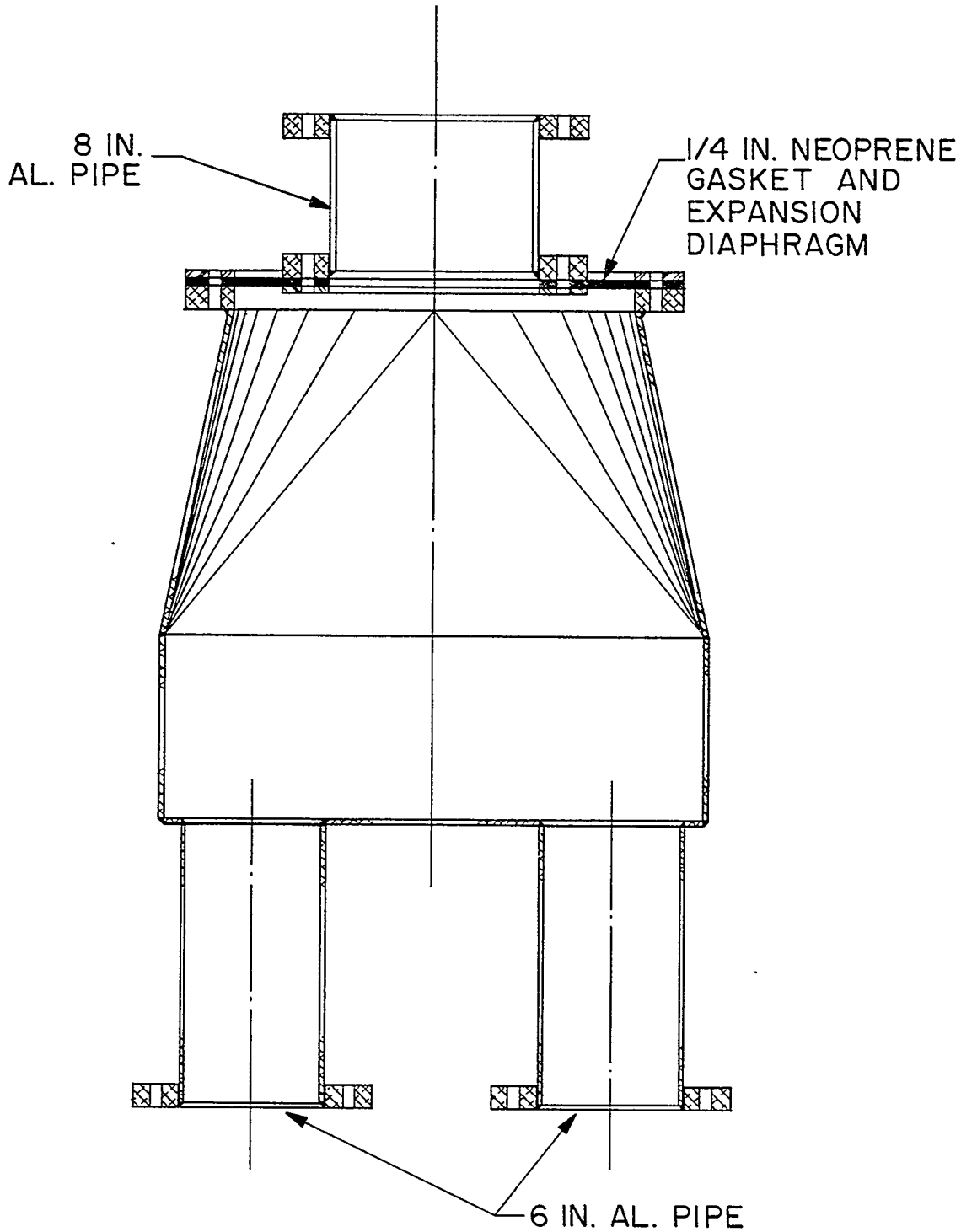

Fig. 6.2.2. Transition Piece and Expansion Joint

A 3-in.-diam by-pass around the reactor tank allows water to be circulated in the external system during servicing of the reactor. Continuous recirculation in the external system is necessary during cold weather to prevent freezing.

A by-pass filter and a by-pass demineralizer, both of which operate continuously, keep the water purity and clarity high.

The total capacity of the reactor cooling system is approximately 13,000 gal; however, only about 8000 gal is normally kept in the system for reasons explained in Section 6.3. The normal approximate distribution is: reactor tank, 4000 gal; seal tank, 2000 gal; and piping and other components, 2000 gal.

The instrumentation and controls associated with the coolant system are described in Section 8. Descriptions of the other components follow.

6.3. Seal Tank

In the present system, the seal tank (Fig. 6.3.1) has four important uses:

1. Expansion volume for thermal expansion or contraction of the system's water volume.
2. Make-up water supply volume to compensate for leaks, evaporation, sampling, etc.
3. Decay tank for ^{16}N before the water reaches the unshielded pumps.
4. Degasifier tank. Dissolved radiolytic gases, radioargon from dissolved air, and fission-product gases from the small amount of ^{235}U on fuel-element surfaces are continuously evolved from the water as it passes through the seal tank and are discharged into the off-gas (NOG) system through a vent pipe connected to the top of the tank.

The total volume of the seal tank is 7000 gal, but normally only 2000 gal is kept in it. The remaining volume is used for storing water from the reactor tank during servicing. Also, keeping the water level low in the seal tank causes a negative pressure, due to syphon effect, to be pulled on the reactor tank by the water flowing downward from the exit

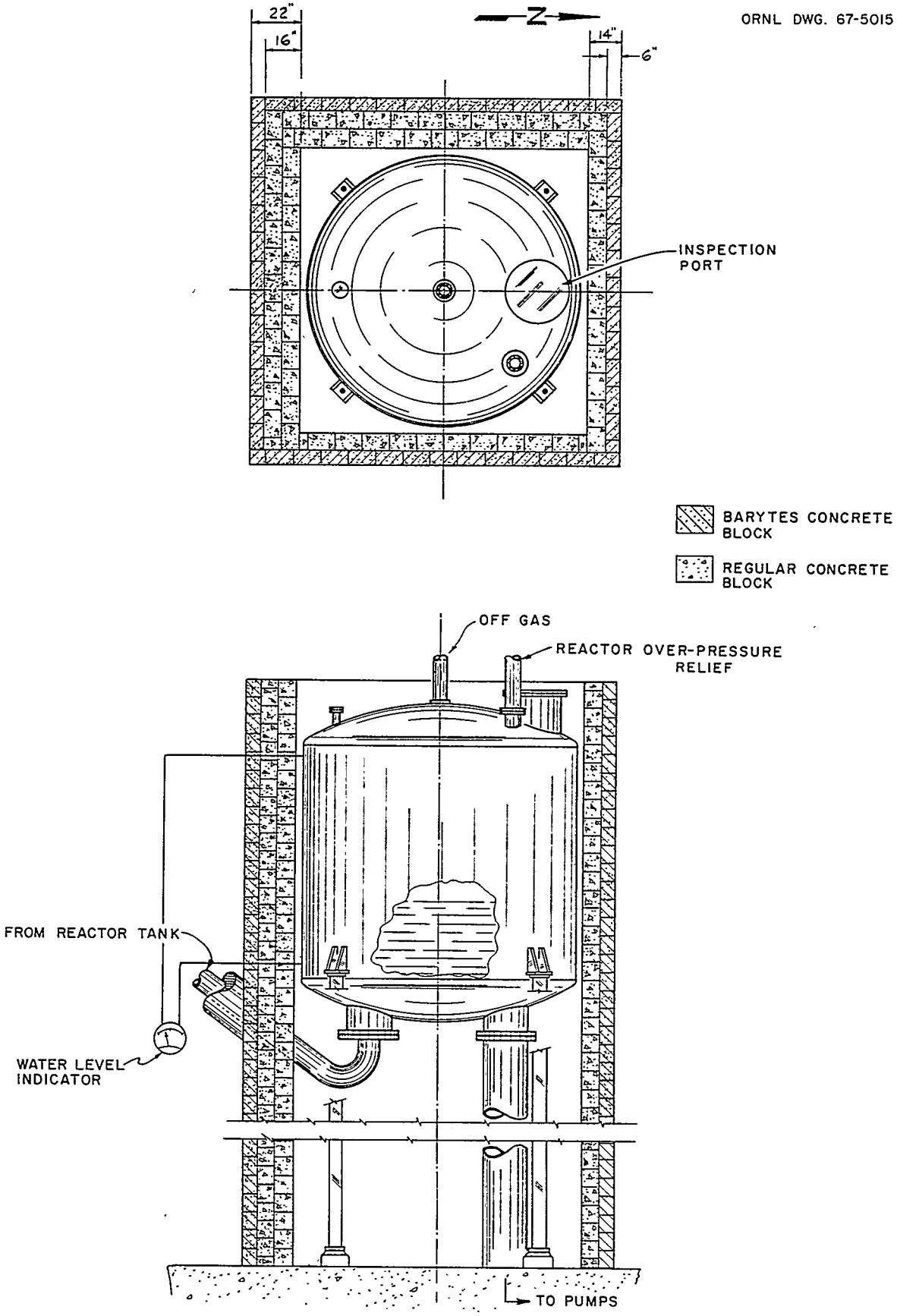

Fig. 6.3.1. Seal Tank

water line penetration in the reactor tank to the bottom of the seal tank. When the seal tank water volume is kept at 2000 gal, this syphon effect causes the internal operating pressure at the top of the reactor tank to be only 2 psi or less so that water leakage through seals is minimized.

The seal tank is 10 ft in diameter by 8 ft 8 1/2 in. high and is supported on vertical I-beams so that its top is at approximately the same elevation as the top of the reactor tank. Due to radiation from ^{16}N in the exit water from the reactor, the tank is completely shielded (see Section 9.3).

6.4. Pumps

The coolant system is equipped with two 1500-gpm centrifugal pumps driven by 75-hp electrical motors. Except for the impellers, which are stainless steel, the pumps are made of carbon steel. Normally, one pump is in operation and the other in standby. Figure 6.4.1 is a photograph of the pump area. Since the pumps are located outside the reactor building, small sheet-metal housings are provided to protect the electric motors from rain.

6.5. Heat Exchangers

The LITR cooling system is equipped with two types of heat exchangers. Most of the heat is dissipated by two water-to-air heat exchangers and supplemental cooling is done by a shell-and-tube, water-to-water heat exchanger.

6.5.1. Water-to-Air Heat Exchangers

These two heat exchangers are rated at 1 Mw each at an ambient temperature of 90°F. Each unit consists of four hundred eighty 3/8-in.-diam, 18 ft 6 1/4-in. long, 0.049-in.-thick wall, finned 72-S aluminum tubes over which air is blown by a two-speed electric fan which operates at either 10 or 40 hp. These heat exchangers are four-pass systems in which the reactor water makes four passes across the air stream in flowing from the inlet header to the outlet header. Figure 6.5.1 is a photograph of the water-to-air heat exchangers. During cool weather, these exchangers handle the total heat load from the reactor. During warm weather, supplemental cooling is required.

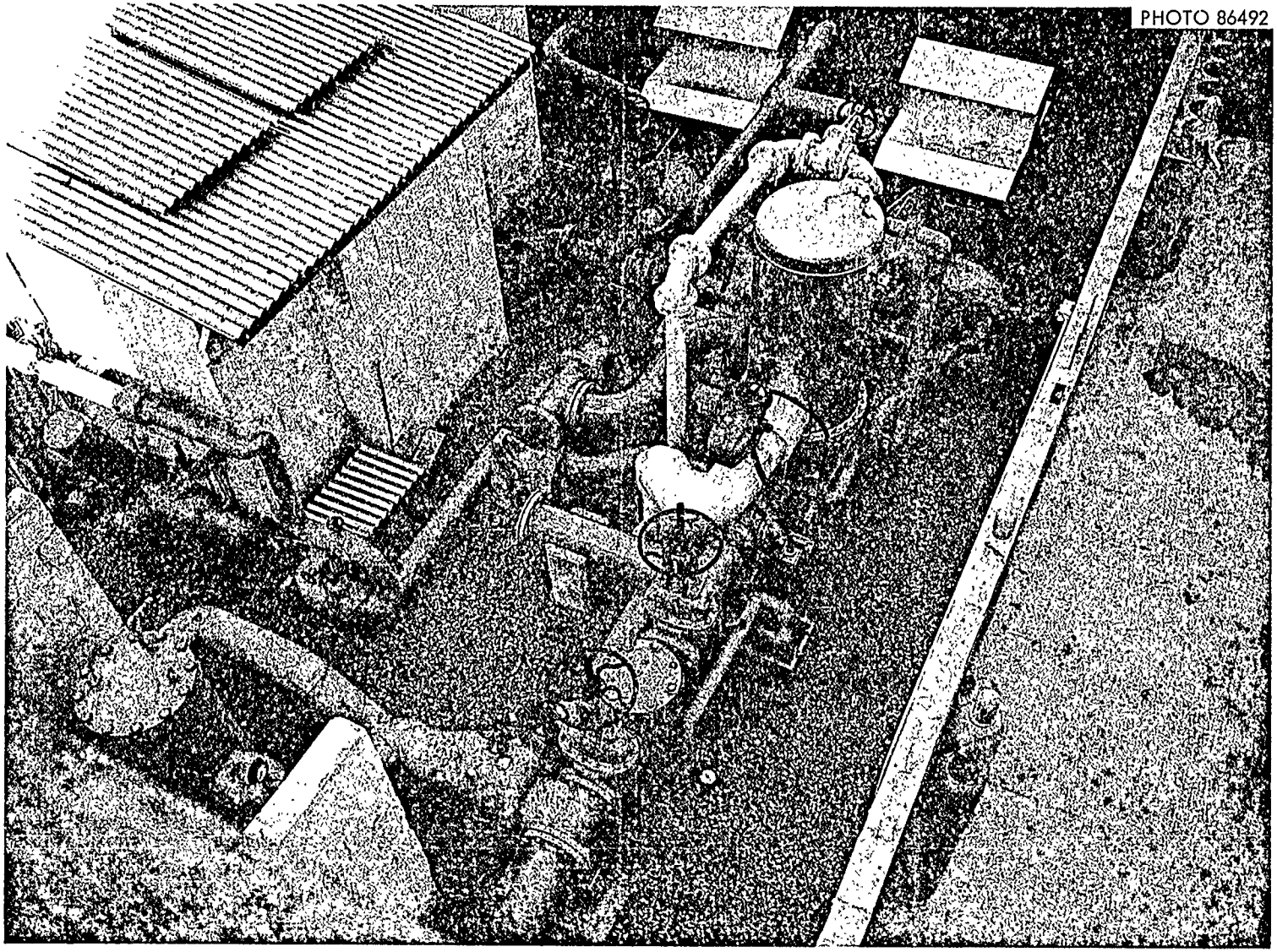

Fig. 6.4.1. LITR Pump Area

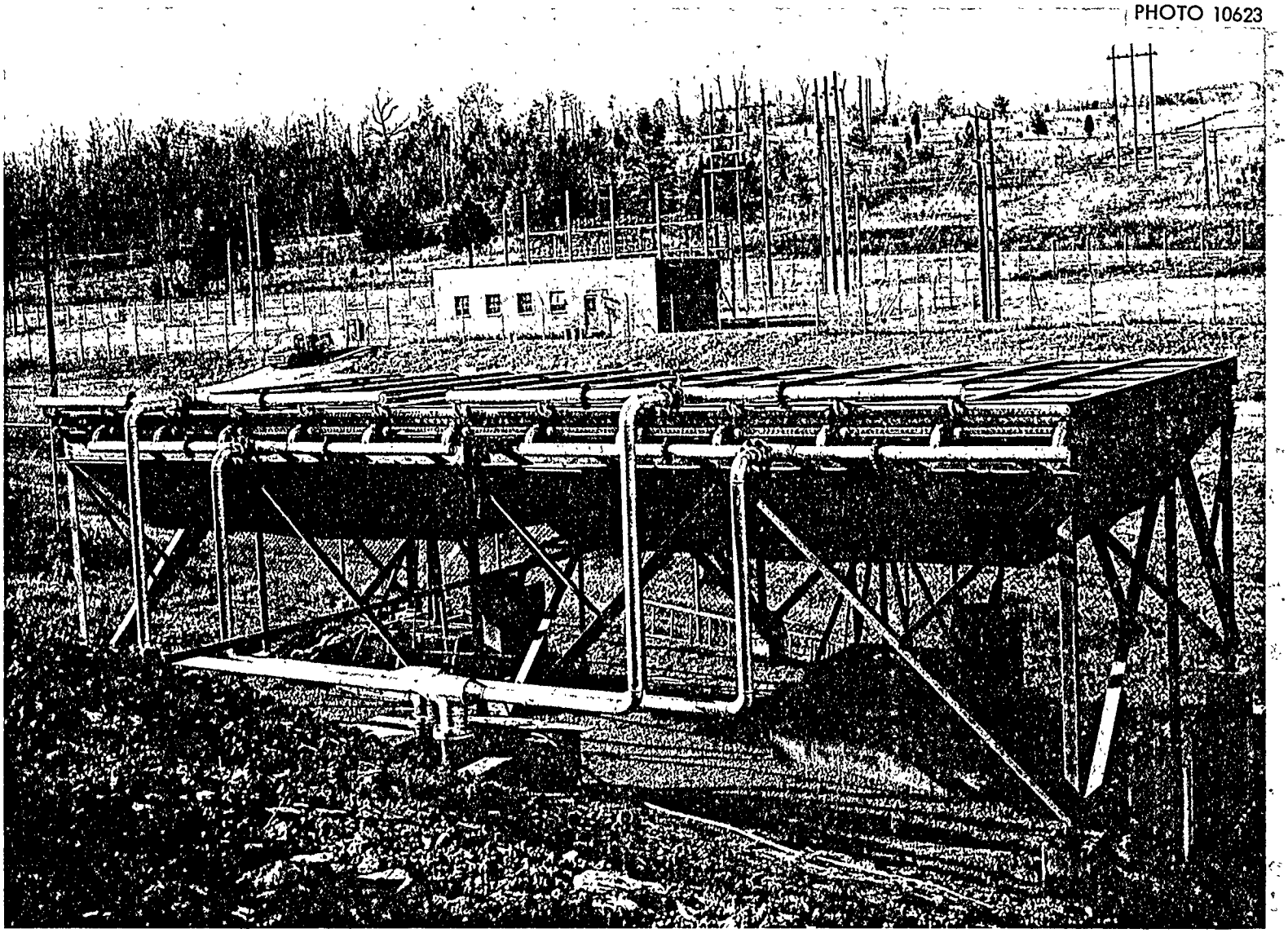

Fig. 6.5.1. The LITR Water-to-Air Heat Exchanger

6.5.2. Water-to-Water Heat Exchanger

A 1-Mw shell-and-tube, water-to-water heat exchanger (Figs. 6.5.1 and 6.5.2) furnishes supplemental cooling during warm weather. Reactor water flows through the tubes and is cooled by process water which flows through the shell. This process water flows directly from the process water supply system and is dumped into a storm drain after one pass through the heat exchanger. Up to 500 gpm of process water is required during hot weather.

In subfreezing weather, steam can be supplied to the shell of the heat exchanger to keep the water system heated during reactor shutdowns.

6.6. Demineralizer

A 2-in.-diam by-pass line diverts 2 to 3% of the total coolant flow from the shell-and-tube heat exchanger through a demineralizer system and back to the suction side of the pumps. The present demineralizer (Figs. 6.2.1, 6.6.1, and 6.6.2) consists of two parallel sets of cation columns followed by one large anion column. Only one set of the cation columns (two columns in series) is used at a time, with the other in standby or being regenerated. The demineralizer column tanks and all associated piping are of stainless steel. The column sizes and other pertinent information are outlined in Table 6.6.1.

Table 6.6.1. LITR Demineralizer Information

Column	Dimensions (in.)		Resin Volume (ft^3)	Resin Type	Regenerant
	Diameter	Height			
North cation (east)	24	46	7	IR 120	5-11% HNO_3
North cation (west)	18	39	3.5	IR 120	5-11% HNO_3
South cation (east)	24	46	7	IR 120	5-11% HNO_3
South cation (west)	24	37	6	IR 120	5-11% HNO_3
Anion	36	96	30	IRA 400	5% NaOH

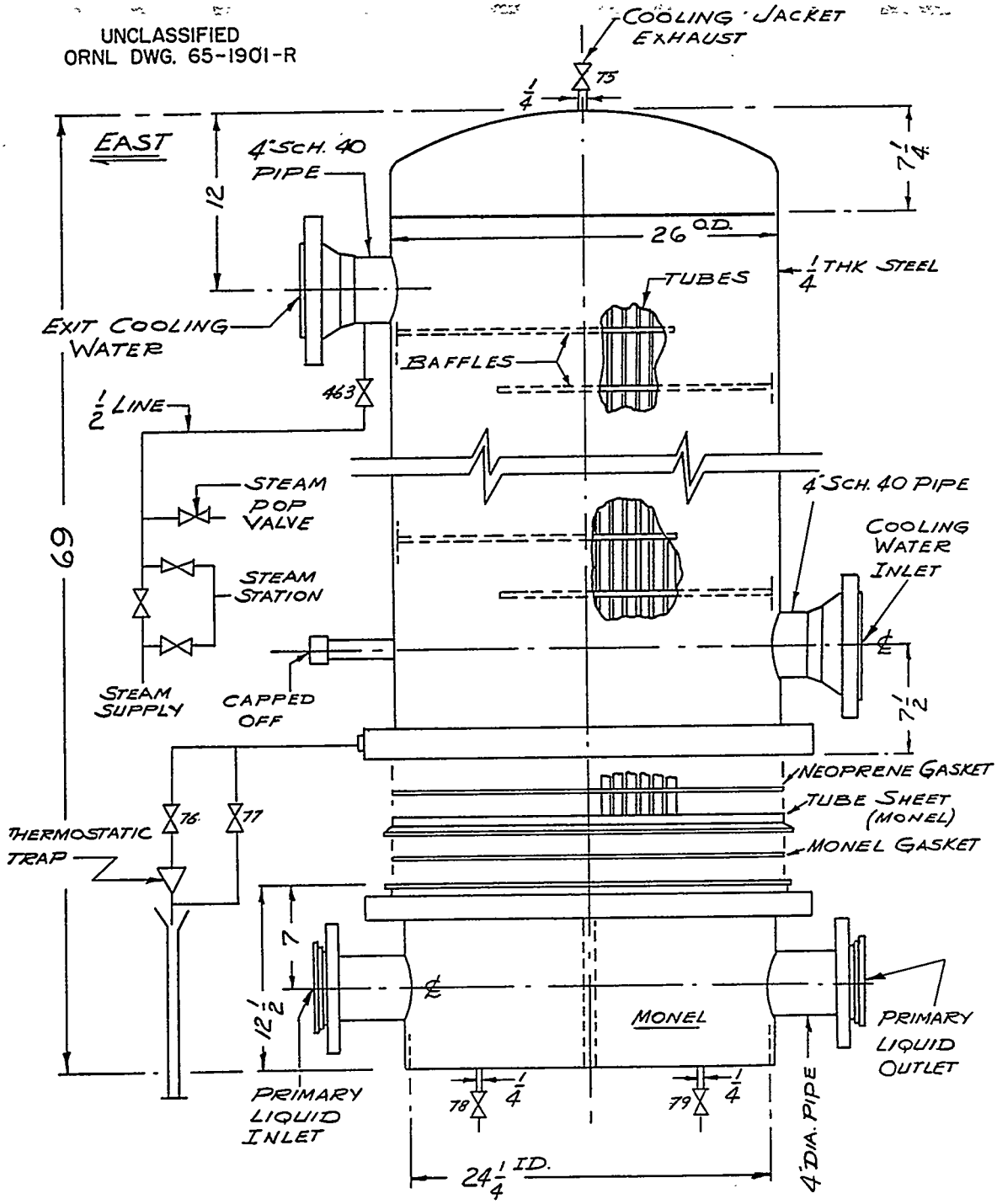

Fig. 6.5.2. The LITR Water-to-Water Heat Exchanger

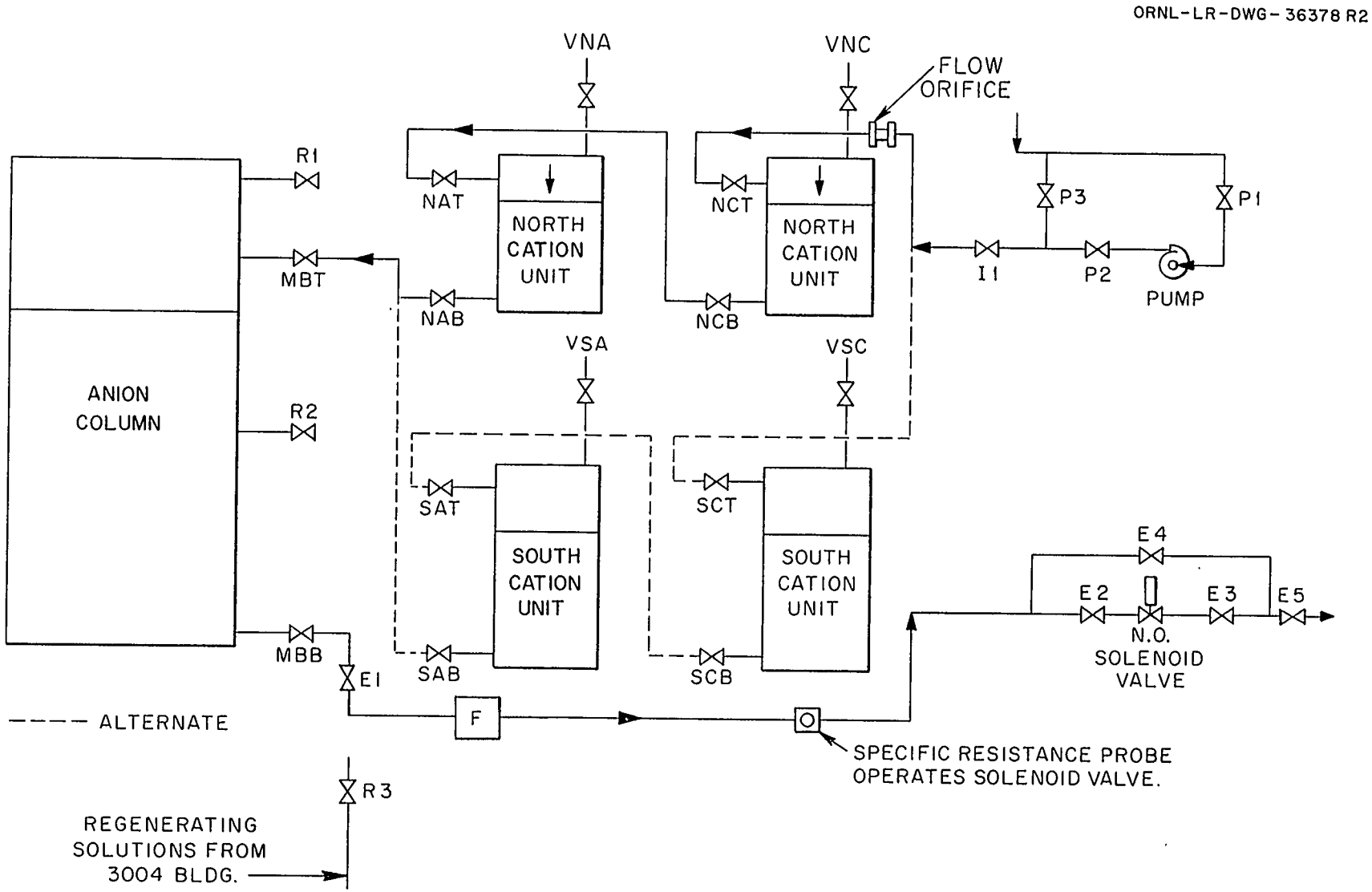

Fig. 6.6.1. LITR Demineralizer System

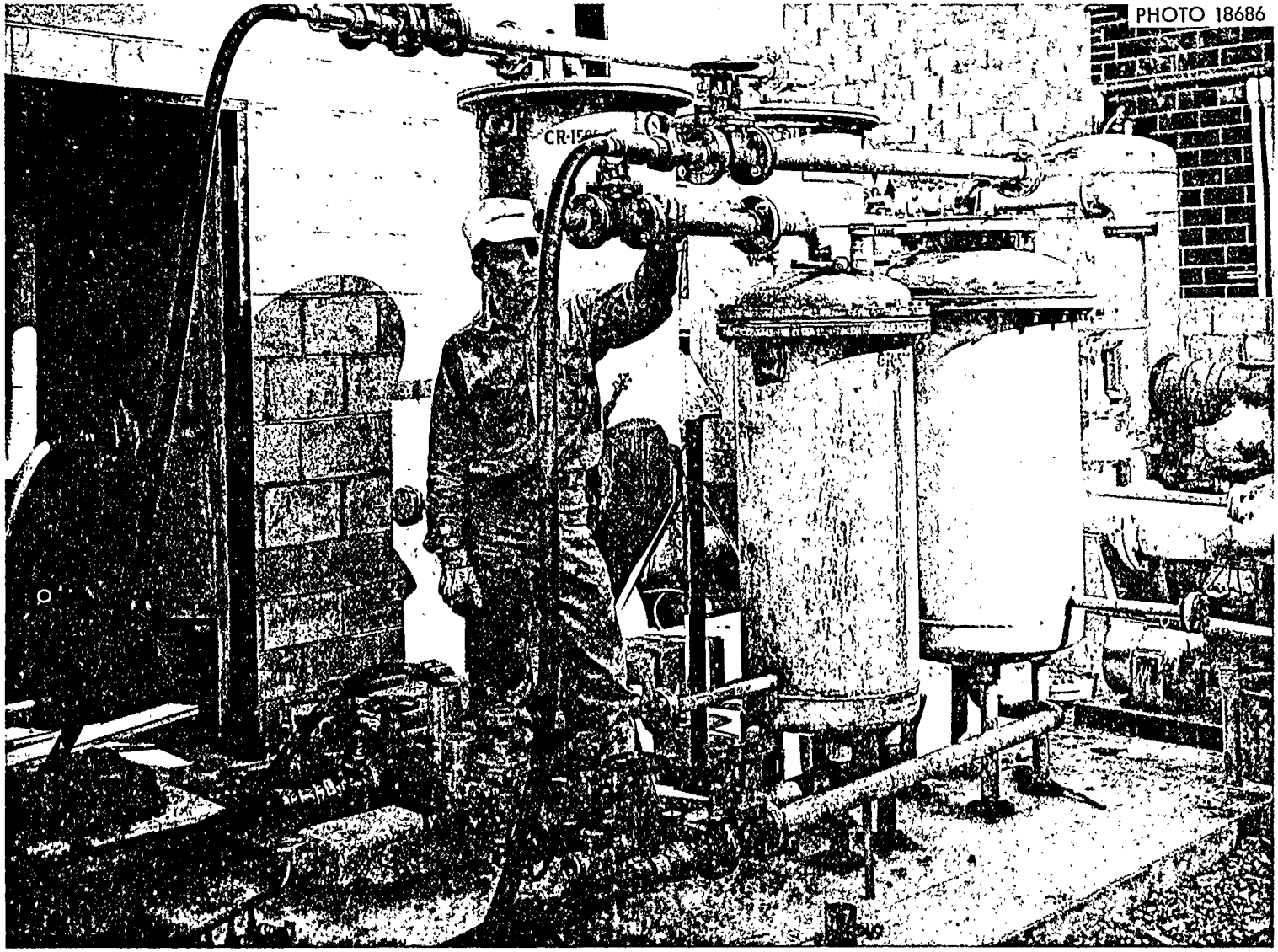

Fig. 6.6.2. LITR Cation Columns

The resins specified are products of the Rohm and Haas Company. At times, equivalent resins have been supplied by other companies.

The cation resin has the following properties: strongly acidic; high exchange capacity; polystyrene nuclear sulfonic acid type; bead form; and resistant to attrition, to temperatures up to 200°F, and to chemical attack. Its applications are for domestic and industrial water softening, hot process-ion exchange, and de-ionization.

The anion resin has the following properties: strongly basic, polystyrene quaternary amine type; bead form; and resistant to temperatures up to 140°F, to attrition, and to acids, alkalis, and common organic solvents. Its applications are for de-ionization in combination with cation exchangers where the ultimate in ion-free water is desired including removal of silicates, carbonates, and bicarbonates.

The resins become difficult to regenerate after about two years of service due to particle cleavage, probably due to radiation and temperature degradation. Anion resin is much more susceptible to this type of damage than the cation resin. When this condition occurs, the resin is removed from the column and sent to the ORNL contaminated-scrap burial yard.

The overall decontamination factor of the demineralizer (counts influent to the cation column divided by counts effluent from anion columns) is usually about 17. The specific resistance of the process water is usually maintained at about 1×10^6 ohm-cm and the pH at about 6. The normal radiation level of the reactor water is maintained at about 18,000 counts min^{-1} ml^{-1} as measured by a scintillation counter. Most of the radioactivity is due to ^{24}Na produced from the fast neutron reaction ^{27}Al (n, α) ^{24}Na in the aluminum components of the reactor core. Other radioisotopes result from neutron activation of corrosion products, contaminant uranium on fuel-element surfaces, and dissolved gases.

To preclude the possibllity that a valving mistake could cause an injection of regenerant solution into the reactor coolant system, the pipes which couple the columns to the reactor system must be disconnected and coupled to the regenerant supply for the regeneration procedure. This technique completely isolates the column being regenerated from the reactor coolant system. The coupling lines are flexible stainless steel bellows hoses.

6.7. Filter

A 6-in.-diam by-pass pipe around the pumps supplies a 100- to 300-gpm flow through a Fulflo filter equipped with 28 Cuno cylindrical styrofoam filters. The carbon-steel filter tank is equipped with a Plexiglas cover to allow visual inspection of the filters. The purpose of the filter is to keep the water clarity good enough to allow adequate visibility for inspecting and servicing the reactor core through a 20-ft depth of water. Particles as small as 5 microns in diameter are removed by the filters. The life of the filter media is about 8 weeks.

6.8. Strainer

A basket-type coarse strainer (Fig. 6.4.1) is installed in series with the main water stream immediately downstream from the shell-and-tube heat exchanger. The purpose of this strainer is to protect the reactor core from any large objects which might get into the water system due to oversight during servicing of the pumps, heat exchangers, etc., or due to wear or breakage of parts of any upstream equipment.

6.9. Emergency Coolant Provisions

In the event of coolant flow loss, adequate afterheat removal from the core following shutdown is provided by natural convection cooling as long as the core remains covered with water.

The exit water line from the reactor tank is equipped with a syphon break to prevent excessive loss of the reactor water if a break in the external piping should occur. Tests of the syphon break have shown that at least 14 ft of water will remain above the reactor core following a water loss due to a rupture of the external piping.

If the reactor should become drained due to a leak in the reactor tank, adequate afterheat removal can be furnished by drenching the core with a spray of water. In order to provide automatic drenching of the core in the event of a water loss, the reactor tank is equipped with an always-filled reservoir adjacent to the reactor tank top. If the reactor

water is lost, water flows from a pipe connected to the bottom of the reservoir and sprays over the core from nozzles attached to the "spider" support arms. The reservoir holds 498 gal of water and supplies a spray for approximately one-half hour, which is adequate time for the decay heat to subside enough that water cooling is not required. Additional water can be supplied to the reservoir directly from the large demineralized water storage tank in the nearby water demineralizer plant.

The spray reservoir (Figs. 3.2.6 and 6.2.1) is a type-304 stainless steel cylindrical tank 3 ft 6 in. in diameter by 7 ft 5 in. long. It is mounted horizontally with its top slightly lower than the top of the reactor tank and connected into the reactor tank by horizontal pipes from both the top and bottom of the reservoir so that filling the reactor tank with water automatically causes the reservoir to be filled also. The top of the reservoir can be vented to the off-gas as a further assurance that gases are expelled from it during filling. During each reactor refueling shutdown, the spray system is checked by injecting air through the drain in the bottom of the reservoir by inserting an air line through the spray tank into the drain and watching for air bubbles rising from the nozzles in the reactor tank.

A backup emergency coolant supply is provided by a process water line. The supply valve to this line is in the local control room on the west wall and is covered with a glass beaker to prevent its being inadvertently opened. To gain access to the valve, the glass beaker must be broken. Opening this valve supplies process water at full pressure of about 60 psi to a 1-in. stainless steel line which is connected to the "A" section of the reactor tank. The supply valve is located so that it is accessible to personnel, even if all water were lost from the reactor tank. Measurements of radiation in the control room during the loss-of-coolant-water tests years ago indicated that radiation levels in the control room under these conditions would be tolerable.

When the reactor vessel is empty and the valve is opened, the velocity of the water flow through this line is high enough to cause the water to splash against the opposite wall of the reactor tank, the supports for the top plug, the shim-rod drive tubes, and the experiment leads so that the whole reactor core is evenly drenched with water. The system is tested annually.

6.10. Reactor-Tank Pressure Relief

The weakest section of the reactor tank, section "D", is designed for an operating pressure of ~50 psi (see Section 5.2.1); however, it is desirable to limit the pressure to no more than about 10 psi to avoid the possibility of causing small leaks through the gasketed seals between the several tank sections. In order to protect the reactor tank from overpressure which might be caused by any of several events, such as rupture of a gas-cooled experiment rig, flow stoppage through the core due to any foreign material being introduced into the system, or inadvertent closing of the exit water-line valve, a pressure-relief has been installed. The relief is simply a 6-in.-diam elevated by-pass between the top of the reactor tank and the top of the seal tank. Any gases released into the reactor tank would be automatically vented through the by-pass to the seal tank and thence to the normal off-gas system. A water-flow blockage within the reactor tank or in the exit water line would cause water to rise into the by-pass line (an elevation of 100 in.) and flow to the seal tank. The maximum pressure which can be caused in the reactor tank by flow blockage is limited to ~10 psi by the by-pass. Figure 3.2.8 is a photograph of the reactor top plug showing the by-pass installed. Since the by-pass must be disconnected each time the top plug is removed, a quick-disconnect coupling is used to join the horizontal flexible high-pressure rubber section to the aluminum riser on the top plug. Because the pump is stopped each time before the disconnection is made, there is no possibility of a water leak during and after the disconnection.

6.11. Precautions to Prevent Freezing

When the reactor power is 1 Mw or greater, there is adequate steam tracing, electrical heating, insulation, and special enclosures to protect those parts of the coolant system in which water is likely to freeze because of subfreezing atmospheric temperatures.

All small pipes and other parts of the coolant system in which freezing is a possibility because of low or intermittent water flow are "steam-traced" by being wrapped with copper coils through which steam may be passed to supply heat. The steam-tracing system is turned on when the outside temperature drops below 40°F.

The d/p cell for the reactor-water flow monitor, the d/p cell for the seal-tank water level monitor, and a sight gauge which indicates the seal-tank water level are vulnerable to subfreezing temperatures. Therefore, these instruments have been enclosed within small structures which are heated by lamps that are turned on automatically when the outside temperature drops to 32°F.

During periods of reactor shutdown or low-power operation in subfreezing weather, additional measures must be taken to prevent freezing of the water in the coolant system. Normally, the water-to-air heat-exchanger fans are stopped and the water continues to circulate through the reactor or through the by-pass system. If it is not possible to continue circulating the water, then the coolant system must be drained.

In the event that stopping the heat-exchanger fans and circulating the water does not keep the water temperature above 40°F (an alarm alerts the operating crew when the water temperature drops to 40°F), steam may be supplied to the shell of the shell-and-tube heat exchanger. Also, tarpaulins are available which can be placed over the water-to-air heat exchangers to minimize heat loss to the atmosphere due to natural-convection air currents.

7. CORE PHYSICS, NUCLEAR DESIGN, AND HEAT TRANSFER

7.1. Introduction

Because the LITR started as a hydraulic mock-up of the MTR, there is great similarity between the two reactors; therefore, portions of the MTR description apply. In order for the reader to become familiar with the two reactors, comparative data for the two reactors are listed in Table 7.1.1.

7.2. Nuclear Design

7.2.1. General Characteristics

The LITR is a heterogeneous light-water-cooled, light-water-moderated, beryllium-reflected, enriched-uranium reactor. One of the principle reasons for the selections of a small-volume reactor such as this for the MTR is that the neutron flux is much higher than, for example, in a heavy-water reactor for the same power level. Going one step further, the thermal-neutron flux distribution is essentially flat in the core and, for a short distance into the beryllium reflector, is equal to or greater than the average neutron flux in the core.

The selection of the optimum core arrangement is made partly on the basis of the neutron flux magnitudes and spectra desired in the various experiment facilities. By specifically arranging the fuel elements and/or reflector pieces, numerous variations of the neutron flux can be achieved. Neutron leakage from the fuel region supplies the neutron current desired for the experiment facilities such as beam holes which are external to the core. The leakage from the core to those facilities depends on the core geometry and size, its metal-to-water ratio, the power distribution, and the parasitic neutron absorption.

The core volume was determined partially by heat-transfer requirements. Variations in the positions of fuel elements, reflector pieces, fuel and fission-product concentration in the elements, and mechanical assembly characteristics naturally cause significant variations and uncertainties in the power distribution. Thus, considerable conservatism was employed in the design of the fuel elements and in establishing the core volume.

Table 7.1.1. Comparative Data for the MTR and LITR

	LITR		MTR	
	General			
Reactor type	Tank type, fully enriched (93.4%) uranium, light water moderated and cooled, beryllium reflected		Tank type, fully enriched (93.4%) uranium, light water moderated and cooled, beryllium reflected	
Nominal reactor power	3 Mw (thermal)		40 Mw (thermal)	
Purpose	Research in neutron physics, solid-state physics, chemistry, isotope production		Research in neutron physics, engineering testing, materials testing, isotope production	
Location	Oak Ridge National Laboratory Oak Ridge, Tennessee, USA		National Reactor Testing Station Idaho Falls, Idaho, USA	
Owner and operator	Owned by USAEC Operated by Union Carbide Nuclear Company		Owned by USAEC Operated by Idaho Nuclear Company	
Designer and builder	ORNL		Designers: ORNL-ANL Architect Eng.: Blaw Knox Construction Company Builders: Flour Corporation, Ltd.	
Present status	In operation		In operation	
Construction schedule	Construction started 1949 Reactor critical February 1950 770-kw operation March 1951 1500-kw operation May 1952 3000-kw operation September 1953		Construction started May 1950 Reactor critical March 1952 Full-power operation (30 Mw) May 1952 Operation at 40 Mw September 1955	
	Reactor Physics			
Neutron lifetime	$\sim 2 \times 10^{-4}$ sec		$\sim 2 \times 10^{-4}$ sec	
Core parameters	$f = 0.773$	$p = 0.97$	$f = 0.773$	$p = 1.00$
	$\eta = 2.070$	$\epsilon = 0.74$	$\eta = 2.070$	$\epsilon = 1.00$
	$k_\infty = 1.600$	$k_{eff} = \sim 1.18$	$k_\infty = 1.600$	$k_{eff} = \sim 1.18$
	$L^2 = 2.940$ cm^2	$\tau = 60.70$ cm^2	$L^2 = 2.940$ cm^2	$\tau = 61.00$ cm^2
Neutron flux	At 3 Mw in core:		At 40 Mw in core:	
	Thermal average 2×10^{13} neutrons cm^{-2} sec^{-1}		Thermal average 2.5×10^{14} neutrons cm^{-2} sec^{-1}	
	Thermal max. 3.5×10^{13} neutrons cm^{-2} sec^{-1}		Thermal max. 4.8×10^{14} neutrons cm^{-2} sec^{-1}	
	Fast average, approx. 3×10^{13}		Fast average, approx. $1.1 \times$ thermal flux	
Reactivity balance	Maximum built-in (clad, clean): 6%		Maximum built-in (clad, clean): $\sim$19%	
	To compensate for: Temperature, 0.1% Xe equilibrium, 2.5% Fuel depletion, 0.7% Experiments, 1.9%		To compensate for: Temperature, 0.1% Xe equilibrium, 4.5% Fuel depletion, 11.0% Experiments, 2.0%	

Table 7.1.1 (continued)

	LITR	MTR
	Core	
Shape and dimensions	Variable within a rectangular parallelepiped 15 × 27 × 24 in.	Variable within a rectangular parallelepiped 9 × 27 × 24 in.
Number of channels and subassemblies	Grid plate with 5 × 9 positions	Grid plate with 5 × 9 positions
Lattice	Rectangular Pitch, 3.03 × 3.19 in.	Rectangular Pitch, 3.03 × 3.19
Critical mass	Approx. 1.8 kg ^{235}U	1.666 kg ^{235}U (Be reflected)
Core loading at rated power	3.8 to 4.0 kg ^{235}U	4.5 kg ^{235}U (loaded for 500 Mwd)
Average specific power in fuel	880 kw/kg ^{235}U	9000 kw/kg ^{235}U
Average power density in core	31.4 kw/liter	400 kw/liter
Burnup	Approx. 40% (No maximum burnup requirements)	30% burnup (No maximum burnup requirements)
Fuel loading and unloading	Manual, remote insertion and removal of fuel with a minimum of 10 ft of water shielding; spent fuel is stored in racks within the reactor tank for three months decay before removing, in a shield, from the top of the tank	Fuel is loaded from top with a long-handled tool and unloaded by dropping into a tube equipped with a valve and seal mechanism connecting tank to a canal with the water level about 10 ft below bottom; discharge operated remotely
Irradiated fuel storage	Up to 2 kg stored in racks inside reactor vessel or storage pool	Approximately 100 elements, stored in a concrete canal filled with demineralized water, are used for gamma source
Moderator and coolant	Light water; average temperature, 105°F (40°C)	Light water; cooled in the flash evaporator; average temperature about 40°C
Blanket gas	None	None
	Fuel Element	
	(LITR fuel is obtained from MTR stock)	
Form and composition	Curved plates Meat dimensions: 23.5 × 2.5 × 0.02 in. Plate overall: 24.625 × 2.8 × 0.05 in. Enrichment 93.4%, 18.8 wt % U alloyed with Al Each plate contains 10.5 g ^{235}U	
Cladding	0.015 in. 1100 Al, picture-frame construction, hot-rolled	
Subassemblies	19 curved plates forming element 48.6865 × 3.15 × 3.015 in.	

Table 7.1.1 (continued)

	LITR	MTR
	Core Heat Transfer	
Heat transfer area	477 ft^2 (44.2 m^2)	397 ft^2 (37.0 m^2)
Heat flux	Av 20.5×10^3 Btu ft^{-2} hr^{-1} (1.54 cal cm^{-2} sec^{-1})	Av 34.6×10^4 Btu ft^{-2} hr^{-1} (26 cal cm^{-2} sec^{-1})
	Max. 61.5×10^3 Btu ft^{-2} hr^{-1} (4.65 cal cm^{-2} sec^{-1})	Max. 80.0×10^4 Btu ft^{-2} hr^{-1} (60 cal cm^{-2} sec^{-1})
Fuel-element temperatures	Max. 150°F (66°C)	Max. design 260°F (127°C)
Heat transfer coefficient	Approx. 1500 Btu ft^{-2} hr^{-1} $(°F)^{-1}$ (0.2 cal cm^{-2} sec^{-1}), based on ORR boiling tests; film temperature drop, 14°F (8°C)	Approx. 8500 Btu ft^{-2} hr^{-1} $(°F)^{-1}$ (1.15 cal cm^{-2} sec^{-1})
Coolant flow area and velocity	Per element, 6.1 $in.^2$ (39 cm^2) Average velocity, 2 fps	Per element, 6.1 $in.^2$ (39 cm^2) Average velocity, 30 fps
Coolant flow rate	1200 gpm	25,000 gpm
Coolant temperatures and pressures	Inlet approx. 95°F (35°C), 15 psig Outlet approx. 115°F (44°C), 4 psig	Inlet 115°F, 50 psig Outlet 126°F, 10 psig
Hot-channel factors	Overall 3	Not available
Shutdown heat removal	Continuing coolant flow by main pump (total of two pumps, one of them as standby), purging when necessary	1000 gpm max., pumped by separate electrical or gasoline-driven pumps or supplied by overhead reservoirs (150,000 gal capacity)
	Control	
Shim safety rods	3 fuel shim-safety rods having a section of Al-cladded Cd and a fuel section, shaped like the regular fuel elements (3 × 3 in.); both sections have 24-in. active lengths	4 fuel shim-safety rods having a section of Al-cladded Cd and a fuel section, shaped like the regular fuel elements (3 × 3 in.); both sections have 24-in. active lengths
	Total length: 13 ft, 7.5 in. Driven from top of tank Shim rod drive speed: 0.08 in./sec	Total length: 13 ft, 7.5 in. Driven from top of tank Shim rod drive speed: 0.08 in./sec
	Total worth approx. 12% $\Delta k/k$	Total worth approx. 12% $\Delta k/k$
	No shim-safety rods similar to fuel rods except lower section is Be (operate in reflector)	2 shim-safety rods similar to fuel shims except lower section is Be (operate in reflector)
Regulating rod	1 regulating rod, cylindrical, Cd, operating in reflector Drive speed: 4 fps	2 regulating rods, cylindrical, Cd, operating in reflector Drive speed: 4.5 fps
	Total worth: 0.50% $\Delta k/k$	Total worth: 0.15–0.40% $\Delta k/k$
Normal reactivity addition rate of regulating rod	Approx. 0.5% $\Delta k/k$ per sec by regulating rod	Startup: At lower power, 0.007% $\Delta k/k$ per sec At higher power, 0.2% $\Delta k/k$ per sec

Table 7.1.1 (continued)

	LITR	MTR
Scram time and mechanism	Delay time, 0.03 sec Rod travel time, 0.60 sec Magnetic release, gravity fall	Delay time, 0.015 sec Rod travel time, 0.500 sec Magnetic release, gravity fall
Sensitivity of automatic control	Approx. 0.1% of full power	Approx. 1% of full power
Temperature coefficient	$6.3 \times 10^{-3}\%\ \Delta k/k$ per °C	$-1.8 \times 10^{-2}\%\ \Delta k/k$ per °C
Burnable poison	None	None
Other control, safety, and shutdown provisions	None	None
	Reactor Vessel and Overall Dimensions	
Form, material, and dimensions	4-section tank, 4 ft, 6.25 in. ID; overall 27 ft high 1 section of 3 S-Al, 2 sections mild steel, 1 section carbon steel	5-section tank, 4 ft, 6.25 in. ID; overall 30 ft high 2 sections of 2 S-Al and 3 sections stainless steel
Working, design and test	Working pressure, 15 psig Test pressure, 60 psig	Working pressure, 50 psig Test pressure, 112.5 psig
Reactor with shielding	24.5 × 24.5 × 23 ft high	32.5 × 32.5 × 42 ft high
	Reflector and Shielding	
Reflector	Be in form of blocks 2 × 2 × 8 in. stacked around core box, minimum thickness 8 in. Be elements in fuel element positions to fill unused spaces in core box	1 ft beryllium bricks 3 × 3 × 37 in., forming cylinder 4.5 ft in diam, 3 ft high 16 in. graphite pebbles 1 in. diam 28 in. graphite bricks 4 × 4 in. Beryllium cooled by main coolant Graphite cooled by air, temperature 230°F (110°C)
Radiation	Approx. 5 mr/hr at contact in various locations around reactor shielding	Design: 1.2 mr/hr Actual: 1.5 mrems/hr at midplane of reactor vessel neutrons, 0.75 mrem/hr
	Containment	
Type and material	None except reactor building (see Sect. 4, this report)	None except reactor building
Surroundings	ORNL in a terrain of low hills and valleys; there is one river, the Clinch, and numerous streams; in a 30-mile radius there is a total of 229,000 people living in towns having a population of 500 or more	Desert-type area, sagebrush-covered plains, low rainfall; less than 1000 population within 20-mile radius

Table 7.1.1 (continued)

	LITR	MTR
	Cost Estimate	
Reactor and building	$2,195,000	$10.5 million, including additions and modifications up to December 1958; cooling system not included
Operating costs	$230,000/year — full costs; includes operating costs, fuel burnup, depreciation, fuel processing, allocations, etc.	$5 million/year — full costs; includes operating costs, fuel burnup, depreciation, fuel processing, allocations, etc.
Staff requirements	A total of 65 operators for three reactors (LITR, ORR, BSR); does not include personnel engaged in performing experiments	250, including operators, technical assistance, engineering, and maintenance
Heat exchangers	2 water/air, 4 pass, finned Al-tubes 1 water/water tube and shell, primary in Monel tubes, used only in summer	3 heat exchangers; evaporative type, i.e., part of water is flushed to steam then condensed in top of exchanger
Coolant purification	50 gpm through ion exchangers 100 gpm through filters	Chemical purity maintained by a 50-gpm makeup rate; a cation exchanger is used intermittently
	Fluid Flow	
Cooling system safety	Emergency spray system	A shutdown flow system is provided from overhead reservoirs and 2 pumps
Fuel failure detection	Monitoring reaction coolant for fission products	Fission product monitor on main stream Individual monitor on each fuel element Dynamic pressure taps at each fuel element

7.2.2. Fuel Loadings and Flux Distribution

The fuel loading pattern of the LITR is very flexible and within certain practical limits may be varied considerably. The fuel and reflector grid provides space for numerous in-core experiments while still maintaining an adequate fuel region. Various fuel loadings have been used successfully. Two main criteria are employed in selecting the fuel loadings. First, the amount of fuel added at each refueling is limited to a value such that the reactor will go critical with the shim rods withdrawn approximately halfway. This seemingly arbitrary criteria is a compromise between an effort to achieve as long an operating cycle as possible and a desire to limit the excess reactivity to a value which would allow adequate control should some system malfunction occur. Second, the lighter, partially-burned elements are placed near the center of the core; and the heavier, newer elements are positioned around the periphery of the fuel region. This latter criterion has a two-fold purpose. Placing the partially-burned elements toward the center of the core in a region of high neutron flux increases the fraction of burnup in those elements. In addition, placing the elements containing more fuel into the outer positions where the neutron flux is somewhat lower decreases the possibility of high power density and, consequently, of hot spots occurring in those elements. A typical core loading is shown in Fig. 5.2.6.

Numerous neutron flux distribution measurements have been made in the LITR but usually they were performed under special circumstances to determine effects of various components on that distribution or to obtain information about a new component. Table 7.2.1 is a listing of typical neutron flux values within the fuel element. The ratio $\bar{\phi}_i/\bar{\phi}_c$ as used here is the ratio of the thermal neutron flux at that point to the average thermal neutron flux in the core.

7.2.3. Nuclear Characteristics of Shim Rods

The control system used in the LITR was designed primarily to effectively control reactivity without causing unnecessarily large perturbations in the power distribution and without causing undesirable reactor shutdowns due to control system malfunctions. The control of the reactor

Table 7.2.1. Summary of Thermal Neutron Flux Measurements in the LITR[a]

Core Position	Flux[b] Average[c]	Flux[b] Maximum
C-12	0.82	1.04
C-13	0.99	1.27
C-14	1.02	1.33
C-15	1.13	1.47
C-16	1.22	1.60
C-17	0.99	1.27
C-18	0.70	0.85
C-19	0.50	0.64
C-22	1.08[d]	
C-23	1.08	1.52
C-24	1.25[d]	
C-25	1.29	1.63
C-26	1.08[d]	
C-27	1.15	1.52
C-31	0.77	1.01
C-32	0.81	1.02
C-33	0.96	1.19
C-34	1.12	1.44
C-35	1.25	1.58
C-36	1.29	1.58
C-37	1.08	1.35
C-38	0.88	1.10
C-45	1.43	1.75
C-52	0.85	1.01
C-54	0.82	1.05
C-56	1.01	1.19
C-59	0.42	0.50

[a]A general discussion of the neutron flux distributions originally calculated for the MTR can be found in Materials Testing Reactor - Project Handbook, ORNL-963, Vol. 1.

[b]Expressed as ratio to average flux in core.

[c]Average flux in core taken as 1.00; maximum to average ratio (excluding shim rods), 1.75; average flux at 3.0 Mw (calculated), 1.84×10^{13} n cm^{-2} sec^{-1}.

[d]Estimated.

is effected by the vertical positioning of three shim-safety rods within the reactor. Each of the three rods has its own drive shaft and release mechanism which operates completely independently of the others. In the event of an emergency, they are released separately, thereby providing multiplicity of control. Releasing any one of the shim-safety rods will, by itself, shut the reactor down.

During normal operation, the three rods are used for rough shimming of the reactivity and are maintained in as nearly equally withdrawn positions as is practicable.

In order to maintain the vertical power distribution within acceptable limits and to decrease the possibility of flux peaking in water gaps in positions from which the rods would be withdrawn, fueled followers were added to the lower ends of the shim-safety rods.

The poison sections of the rods are made of aluminum-clad cadmium sheet which is formed into square-cross-section cans that fit into the regular positions of the core. The fuel followers of the rods are very similar to regular fuel elements; the main difference is that only 14 fuel plates are used in each follower. The total fuel content in a new shim-safety-rod fuel follower is 131 g of ^{235}U contained in aluminum-clad, uranium-aluminum alloy fuel sections. Uranium used in the 19.5% U-Al alloy is enriched to 93 wt % ^{235}U.

Differential and integral reactivity worths for the control rods have been determined experimentally for a number of core loadings. Recent calibrations have been made on a typical operating core by using the conventional period method. Results of these calibrations are shown in Figs. 7.2.1 through 7.2.3.

7.3. Fuel Element Design and Analysis

The LITR adopted the MTR fuel element design, and MTR-type fuel has been used in the LITR from the beginning. In fact, fuel elements are obtained from the MTR fuel element supply in Idaho.

ORNL DWG. 67-2352

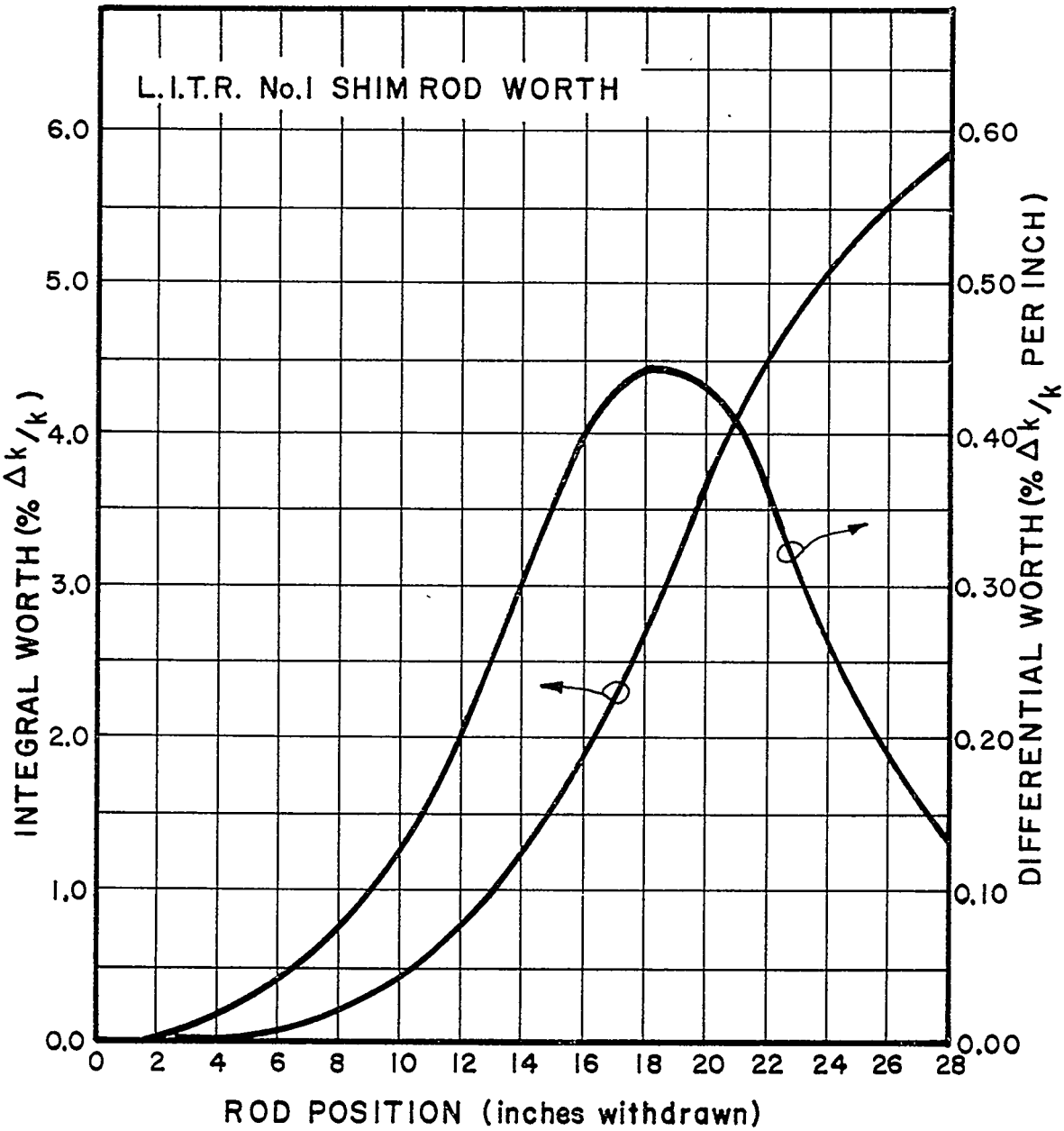

Fig. 7.2.1. No. 1 Shim Rod Calibration, LITR

ORNL DWG. 67-2353

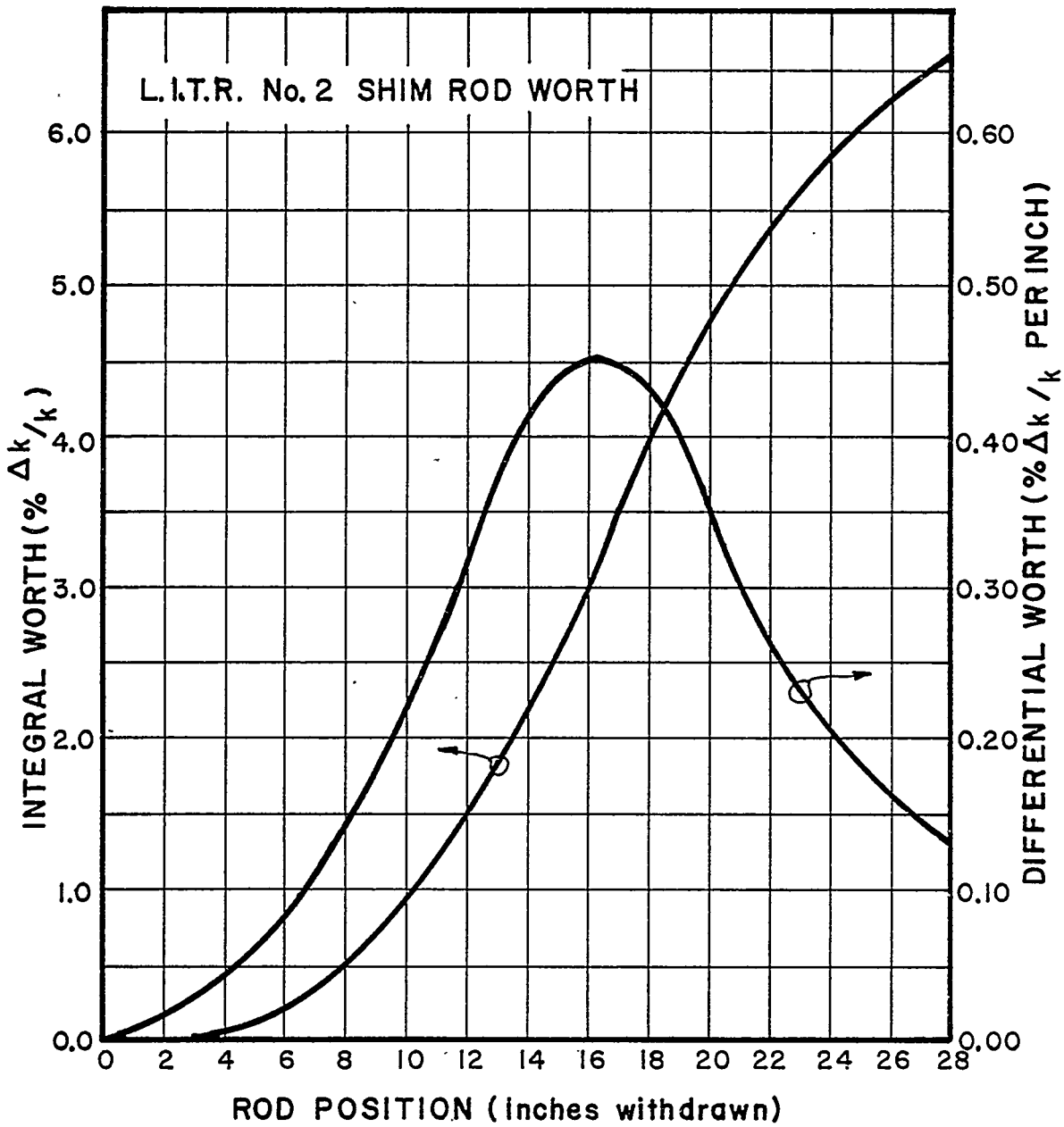

Fig. 7.2.2. No. 2 Shim Rod Calibration, LITR

ORNL DWG. 67-2354

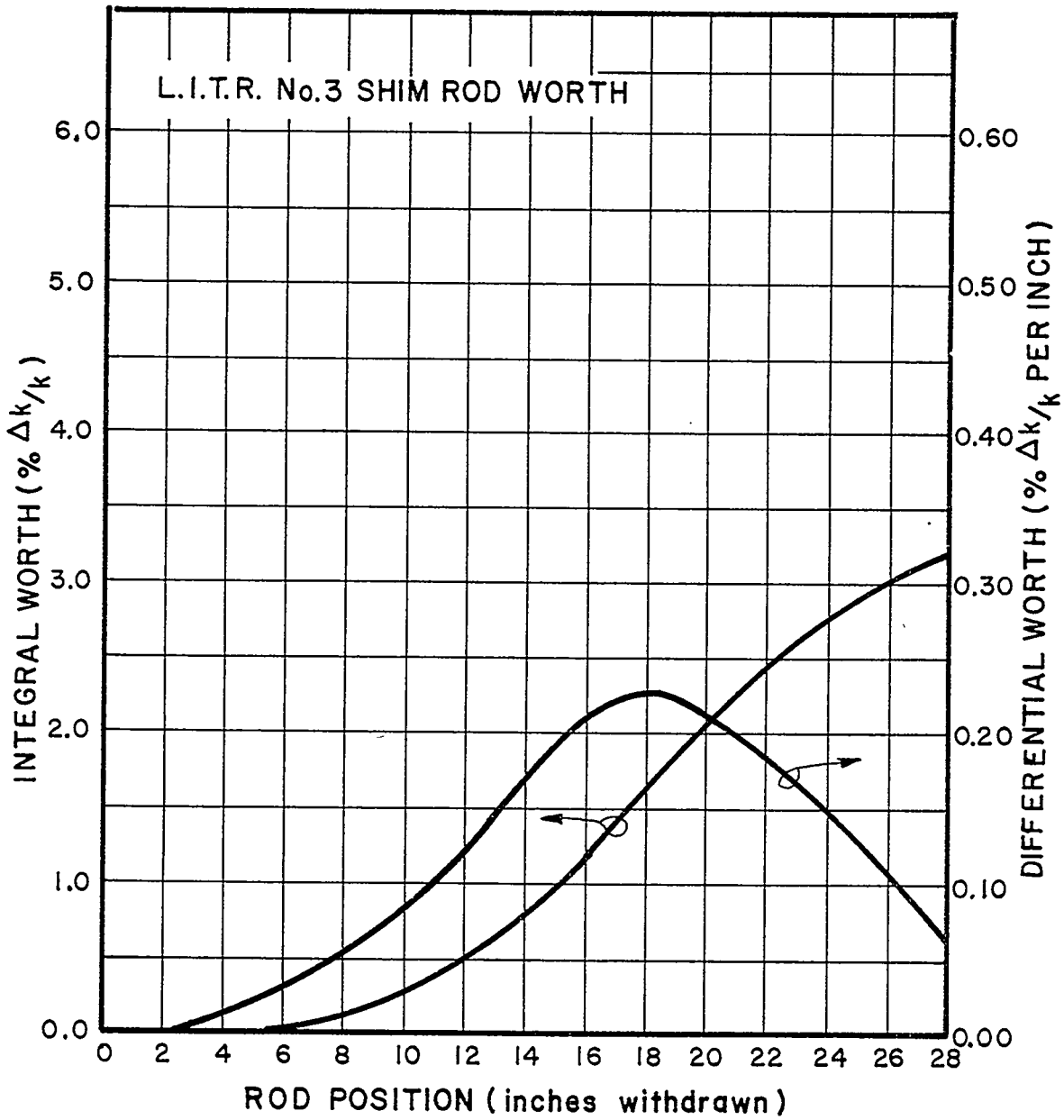

Fig. 7.2.3. No. 3 Shim Rod Calibration, LITR

7.3.1. Fuel Element Design

Consideration of several types of fuel elements with respect to technology and economy led to the choice of the square cross-section, rectangular plate-type elements using aluminum-clad, uranium-aluminum alloy fuel plates for the MTR. The technology of the plate-type elements chosen was more advanced than it was for other types of fuel elements. The development and use of this type of element in the MTR contributed enormously to the knowledge and confidence in the use of the plate-type element.

The thickness of the fuel-alloy core in each fuel plate is constant across the width of the fuel plate. No attempt has been made to vary the fuel distribution either longitudinally or transversely within the elements because the benefits that might be realized from that practice would be far offset by the additional cost of fabrication of the elements.

7.3.2. Mechanical and Hydraulic Analyses

The curved fuel plates as used in the MTR are subjected to two main kinds of loading. One type is that which results from thermally-induced, differential transverse and longitudinal expansions of fuel plates, and the other is that which results from lateral pressure differentials existing across the fuel plates. Furthermore, if the plates are curved, they will bend in that same predetermined direction as they heat up during operation, thus preventing plate-to-plate contact. In general, elements with curved fuel plates present more complex design and analysis problems than ones with flat fuel plates would. However, the curved plates are structurally stronger than flat ones; hence, the curved-plate type elements were chosen for the MTR and therefore for the LITR.

The temperature increase of the fuel elements in increasing the power from zero to 60 Mw in the MTR results in thermal expansion of the fuel plates both in the longitudinal and transverse direction. Transverse expansion is very small and results only in a slight increase of the arc of the plate or, alternatively, a decrease in the radius of curvature of the arc. In some cases, this expansion might have a tendency to decrease the thickness of a coolant channel; but since all the plates in the element

expand about the same amount, the thicknesses of coolant channels remain nearly the same. The maximum thermal expansion of the plates' thicknesses is even less important than the transverse expansion. The longitudinal expansion is of little concern. Since the two outside curved plates of the fuel element also contain fuel, no important temperature differences exist between the outer fuel plates and the inner fuel plates. Therefore, the difference in expansion is small; so the inner plates do not have to withstand large compression loads. Furthermore, since the fuel elements themselves are not held rigidly in place with respect to their vertical position, the elements may expand freely without constraint.

Hydraulic loads exist because of small variations in plate dimensions which, in turn, cause differences in coolant channel widths. These loads would exist on the plates whether the fuel plates were curved or not; and, therefore, this type of loading is not unique to curved plate-type elements. The net result of a small differential pressure across a fuel plate would be for the plate to be strained so that the radius of curvature of the plate would increase or decrease depending on whether the net pressure was greater on the convex or concave side of the plate. This effect then would increase the flow area in one coolant channel while decreasing it in the adjacent one. The critical velocity for buckling is higher for the curved fuel plate than it is for the flat plate because the curved plate simply is structurally stronger, both with respect to bending and torsional loads. Here the reader is reminded that the foregoing discussion is concerning the MTR which operates at 60 Mw and is being applied to the LITR which operates at 1/20 of this power level. Both reactors contain identical fuel elements. Further comparisions were made in Table 7.1.1.

8. REACTOR INSTRUMENTATION AND CONTROLS

8.1. Introduction

The prime safeguard function of the LITR instrumentation and controls is to keep the reactor safe from undesirable, large-scale power changes. This protection comes from a highly reliable, well tested, rapid, electronic safety system which has at its disposal three shim-safety rods (see Section 5.2.2).

The routine and practically continuous task of the control system is that of maintaining constant power production in the reactor. During operation, the automatic power-control system continuously monitors the neutron intensity at a given location near the reactor vessel and adjusts the regulating rod as needed to keep the neutron intensity constant.

At the LITR, there is also a large group of instruments and equipment that make up the process instrumentation. Such important parameters as primary water temperature, pressure, and flow are monitored and recorded. Furthermore, radiation from the water system and off-gas systems as well as negative pressure in the off-gas systems are also recorded as an aid in responsible operation of the reactor. Where necessary, automatic reactor power reduction systems have been installed on the process instrumentation.

8.2. Channel Isolation

The reactor protective system has been designed on the basis that at least two physically isolated and functionally independent channels must be employed to measure each pertinent variable. Further, continuous and independent monitoring is featured in each nuclear safety channel to determine its state of operability.

Signal circuits of the individual channels are carried in separate conduits from the sensors to the instrument panels. There the instrumentation is displaced laterally by channels, thus simplifying the separation of sensitive circuits behind the panels. Two-pen ECI* recorders

---

*Foxboro Electronic Consotrol Instrumentation.

were selected for use with the process type channels to conserve panel space; channel separation was attained as above and also by placing one of each pair of sensitivity circuits in each of two recorders. For example, one reactor-vessel pressure is recorded along with cooling water flow by one instrument, while the second pressure and ΔP across the reactor core are recorded by another.

The process instrumentation has been supplied in sufficient depth that one of each pair of identical or complementary channels can fail during a run without appreciably reducing the protection afforded. It is not intended that reactor startups will be made unless all channels are operating properly. The arrangement of sensors, wiring, and instruments is intended to minimize the possibility that a failure in any channel will precipitate a failure or interfere with the proper operation of any other channel.

8.3. Safety and Control Rods

The reactor is controlled by four rods, one regulating rod and three shim-safety rods. Reactivity is increased by lifting the rods; thus, the force of gravity may be used to effect scrams and to hold the rods in place when the reactor is in the shutdown condition. Normally, the coolant flow through the core of a reactor, providing the flow is in the direction the rods travel for a scram, augments the force of gravity; at the LITR, the flow is so slow that this effect is negligible. The rod-drive motors are mounted on the reactor vessel top cover and are connected to the rods by long extension tubes. The shim-safety rods are coupled to their drive tubes through direct-lift electromagnets and are released under scram conditions by decreasing the magnet current until the rod drops. The regulating rod is mechanically coupled to its drive tube, since it has no protective functions and therefore need not be released when the reactor is scrammed.

The top cover with the rod-drive mechanisms must be removed from the reactor vessel for refueling of the reactor and for servicing experiment rigs. To facilitate handling of the top cover, the electrical circuits to the drives are brought in through separable connectors attached

to multiconductor cables. An automatic electrical check rather than a visual inspection determines that the cables are properly connected to the top-cover terminals. A monitoring circuit going through all cables and connectors is interrupted by disconnecting a cable or by misconnecting cables, since different pins are used for the different connectors, thus scramming the reactor. Further, the scram signal cannot be cleared until all cables are properly connected.

The regulating-rod-drive mechanism is of the rack-and-pinion type. The motor, part of a servo system described later, is rated at 1 hp and has a permanent-magnet field structure. It can develop unusually high torques. The system is a prototype of that developed for the MTR.

Position information of two types is transmitted from the drive to the control room: continuous, by means of a synchro system, and in steps, by control switches that are closed in sequence as the regulating rod is withdrawn and opened in the reverse sequence as the rod is inserted. The switches also supply control information to both the reactor shim-safety-rod control system and the servo system. The functions of these switches are indicated in Fig. 8.3.1 which is a logic diagram of control and will be commented on only briefly here. The "fully withdrawn" and "fully inserted" switches determine the limits of travel of the rod. In addition, they protect the drive mechanism by preventing the motor from moving the rack too far in either direction. Switches "B" and "E" act to slow the servo motor before the rod reaches its travel limits to reduce the amount of energy that otherwise would have to be dissipated in the shock absorbers. The reactor control functions of these switches along with the functions of "C" and "D" are described later. Pilot lights at the control panel indicate which switches are closed and which are open.

The shim-safety rod drives are of the lead screw and rotating-nut type and are powered by 1/6-hp, 60-cycle three-phase ac motors. Both coarse and fine continuous position information is furnished. The coarse synchro system covers the full rod-drive travel in 270° of angular displacement while the fine covers one inch for 360° of rotation. Both

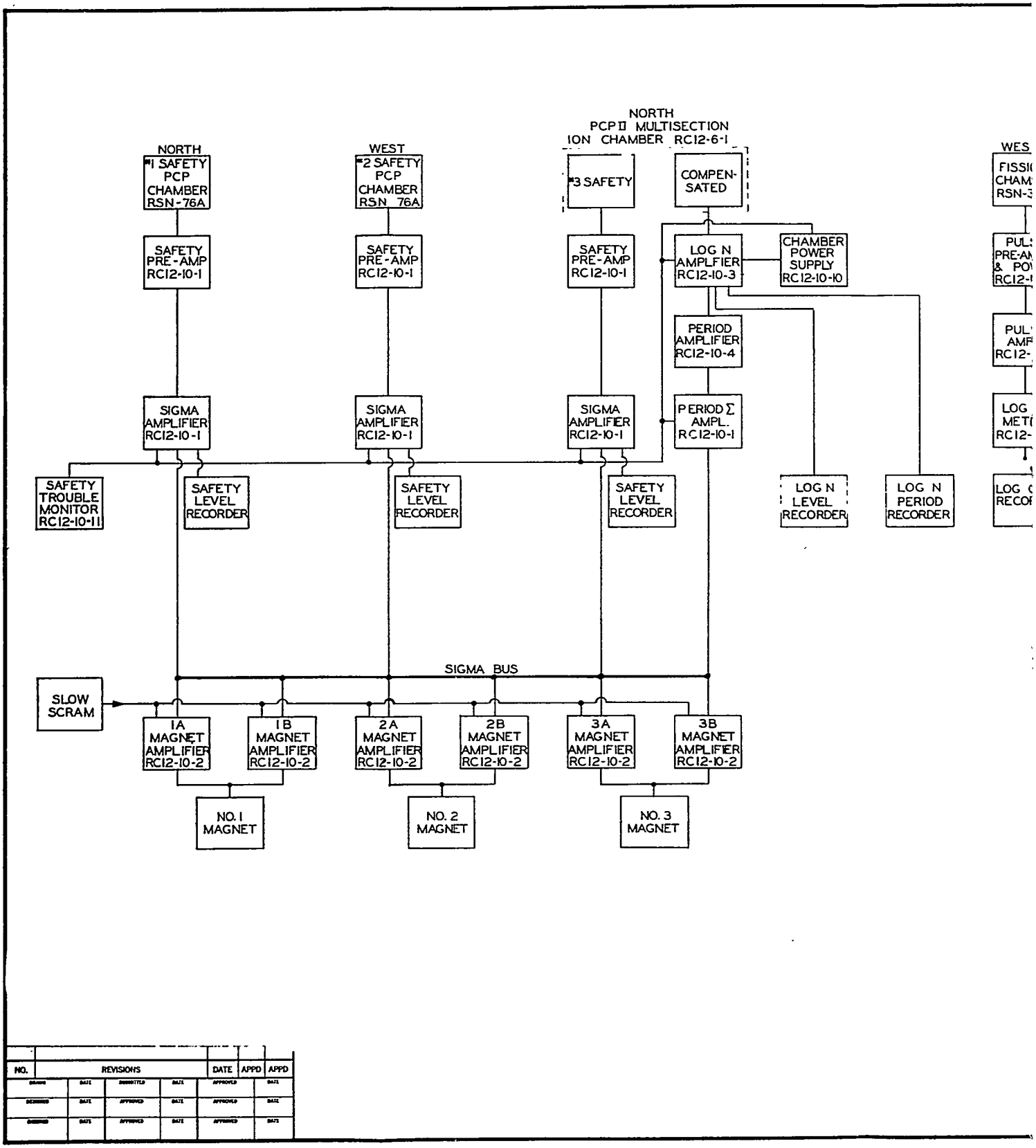

NO.	REVISIONS			DATE	APPD	APPD

Fig. 8.3.1. Block Diagram of C

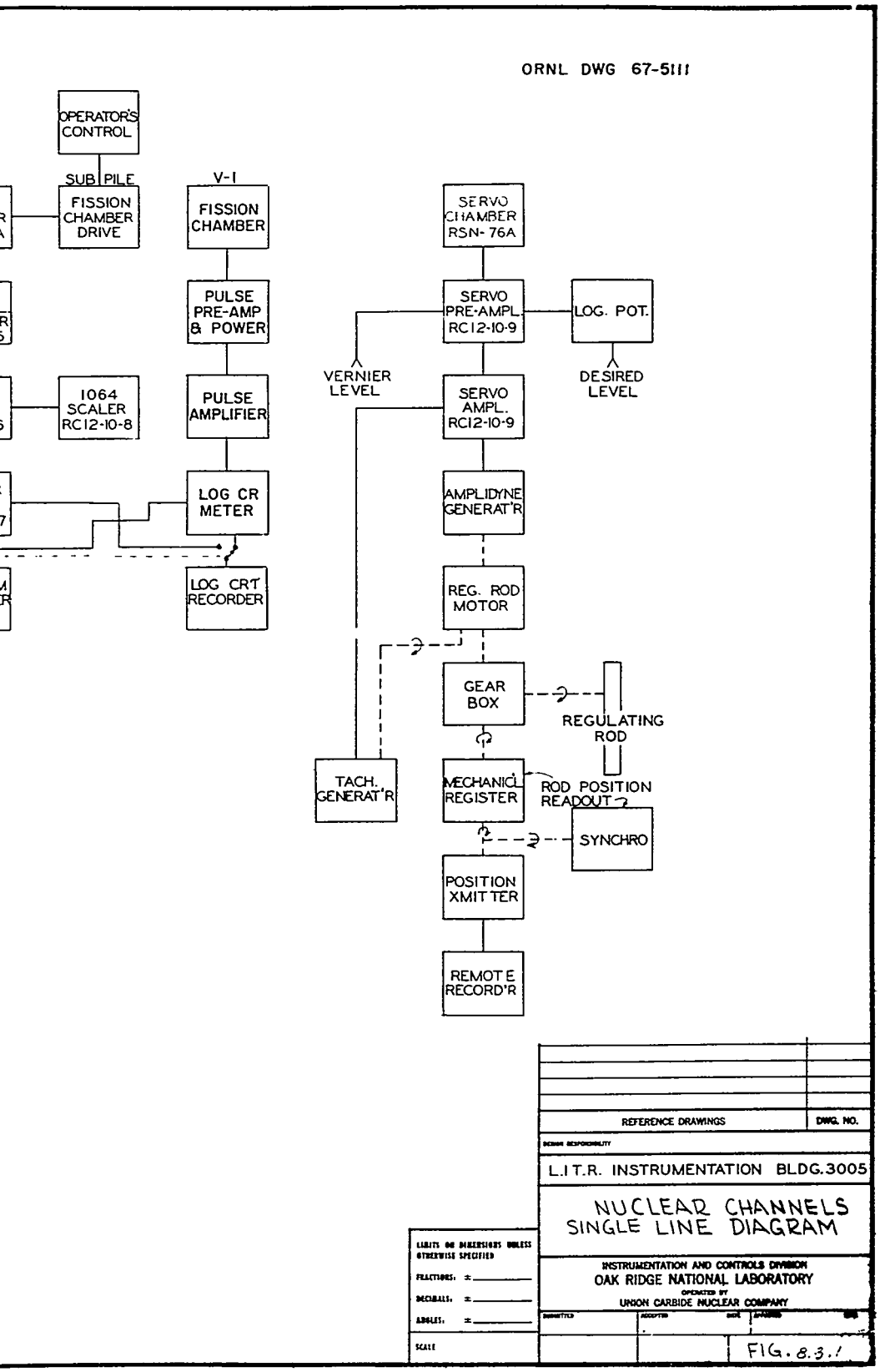
ORNL DWG 67-5111
OPERATOR'S CONTROL
SUB PILE
V-I
FISSION CHAMBER DRIVE
FISSION CHAMBER
PULSE PRE-AMP & POWER
1064 SCALER RC12-10-8
PULSE AMPLIFIER
LOG CR METER
LOG CRT RECORDER
SERVO CHAMBER RSN-76A
SERVO PRE-AMPL. RC12-10-9
LOG. POT.
VERNIER LEVEL
DESIRED LEVEL
SERVO AMPL. RC12-10-9
AMPLIDYNE GENERAT'R
REG. ROD MOTOR
GEAR BOX
REGULATING ROD
TACH. GENERAT'R
MECHANICAL REGISTER
ROD POSITION READOUT
SYNCHRO
POSITION XMITTER
REMOTE RECORD'R
REFERENCE DRAWINGS
DWG. NO.
L.I.T.R. INSTRUMENTATION BLDG.3005
NUCLEAR CHANNELS SINGLE LINE DIAGRAM
INSTRUMENTATION AND CONTROLS DIVISION
OAK RIDGE NATIONAL LABORATORY
OPERATED BY
UNION CARBIDE NUCLEAR COMPANY
FIG. 8.3.1

trols

coarse and fine positions are displayed on the same indicator through the use of concentric scales and pointers. The coarse position synchro generator feeds two different receivers and is sized accordingly.

Rod-drive position information is indicative of rod position only while the rod is coupled to its drive. Coupling, as indicated earlier, is by means of an armature on the upper end of the shim-safety rod and an electromagnet suspended at the lower end of the drive shaft. The armature and the magnet housing are made to serve as the two halves of an electrical contact which, when closed by grounding the magnet housing to the rod armature, completes a circuit through the coil of a relay, actuates it, and thus indicates coupling of the shim-safety rod to the drive shaft. The magnet housing is insulated from the drive shaft to isolate it from the reactor vessel. The resistance of the demineralized reactor water is high enough that shunt current around the contact does not interfere with the operation of the relay. Polarization and electrolysis problems have been avoided by operating the system at 12-v ac.

The clutch switch can tell only that the rod is coupled to or uncoupled from its drive. It is desirable that the operator know immediately that a scrammed rod is really inserted into the core and did not stick in route. Such information is supplied by the seat switches and their pilot lights. The switches (see Fig. 5.3.7) are mounted below the reactor vessel. Bellows-sealed push rods which extend up into the shock absorber dash pots are pushed downward to actuate the switches when the shim-safety rods seat. Both the seat and clutch switches have other functions, and these are described later.

Overtravel of the drive shaft in both directions is prevented by the action of the upper and lower limit switches which are tripped by actuators attached to the drive lead screw. Pilot lights on the operator's panel indicate the tripped condition and serve as check points for calibration of the synchro systems. Deceleration contacts are not necessary for the shim-safety drives since their motion is quite slow.

8.4. Safety Systems

The nuclear instrumentation is typical of that found in other ORNL-designed reactors such as the MTR, ORR, BSR, and TSR and includes power-level safety, log-N, and counting channels (see Fig. 8.3.1).

The power-level safety channels (nuclear channels of the protection system) are supplied in triplicate and have a useful operating range of a little more than two decades. Their flux sensors are commercially available, uncompensated chambers (see Table 8.4.1). Their only special feature is that they were designed for fairly high temperature operation, appreciably higher in fact than the 115° to 130°C encountered in the LITR. The chamber cables are run in three separate groups, suitably spaced and mechanically protected to make them effectively independent. These cables continue through the sigma preamplifiers, near the chambers, to the sigma amplifiers.

Table 8.4.1. LITR Ionization Chambers

Application	Quantity	Manufacturer	Type	Sensitivity
Safety	2	Reuter Stokes, RSN76A[a]	Uncompensated	3×10^{-14} amp/nv
Safety Log N	1	ORNL PCP II-106	Multisection	2.5×10^{-15} amp/nv
Servo	1	RSN76A[a]	Uncompensated	4×10^{-15} amp/nv
Counting	2	R.S. No. 34A	^{235}U Fission	0.1 cps/nv

[a]Modified by the addition of radiation resistant leads.

The output of the three sigma amplifiers is connected to the common sigma bus and through this to the magnet amplifiers. The sigma-bus voltage is held constant by the sigma amplifiers up to N_F and is raised fairly rapidly as power rises above that level. At about 150% N_F, the bus voltage has become high enough to cause a reduction of the output currents of the magnet amplifiers to a low enough point that the shim-safety rods drop into the core. The system is a one-out-of-three type since any one channel can act independently of the others to scram the reactor.

The sigma bus is the vulnerable part of the system and is therefore carefully protected both electrically and mechanically. Inadvertent shunting of the sigma bus could, if of sufficiently low resistance, prevent the amplifiers from maintaining normal voltage or from raising it to scram the rods. To protect against this condition, the magnet amplifiers are arranged to cut the magnet current off not only when the bus voltage rises too high, but also when it falls appreciably below normal.

In order to allow servicing during operation of the reactor, three independent channels are installed rather than just the two required to meet minimum specifications. Under no circumstances would a one-out-of-one safety system be acceptable since an "unsafe"* failure in it could leave the reactor unprotected for the remainder of the interval between tests. Two independent channels in a one-out-of-two configuration offer quite adequate protection but increase the probability of unwanted shutdowns from "safe"* failures. With three independent channels in a one-out-of-three arrangement, the probability of scrams from safe failures is increased but the probability of the occurrence of sufficient unsafe failures to preclude safeguard action during a run is made quite small. Safe failures, on the other hand, have occurred so infrequently in service that they constitute no problem; and, with three channels, the reactor is not likely ever to be without adequate protection.

The LITR safety and log-N channels are monitored for unsafe failures and the operator is warned should one occur. If a second unsafe failure should occur before the first is corrected, the operator is warned again and the reactor power is automatically reduced by insertion of all the shim-safety rods.

Reactor power information is derived from the power-level channels and displayed on three strip-chart recorders. The recorder signal circuits are carefully isolated from the remainder of the safety circuits so that no shorts, grounds, or accidental application of potentials to

---

*An "unsafe" failure is defined as one which disarms a safeguard instrument so that the safeguard action cannot be accomplished. A "safe" failure is defined as one which causes an instrument to exercise its safeguard function as a result of the failure.

the former in any way affect the operation of the latter. Control information is taken from each of these recorders also by the use of electrical switches in the recorders which are closed when certain power levels are indicated. The functions of these switches as well as those in the recorders for the log-N and count-rate channels are described later.

The high level of gamma flux in the personnel working area at the ionization chambers makes them completely inaccessible while the reactor is operating; and, even 24 hr after shutdown, the flux is still high enough for a person to receive a full week's dose in 20 min or less. Occasionally, slight repositioning of the chambers is necessary to keep the power-level channels calibrated with respect to the reactor heat power; for example, following a rearranging of the reactor fuel in the core for the convenience of an experiment. Both to prevent unnecessary personnel exposure to radiation and to increase reactor availability, the chambers are fitted with remote positioning mechanisms (see Fig. 8.4.1). Each of these mechanisms consists of a traveling nut (attached through an extension rod to the chamber), a driving lead screw, a crank for manual operation, a turn counter accessibly located, and an interconnecting speedometer-type flexible cable for turning the lead screw. A chamber-positioning assembly is mounted in each ionization-chamber access tube along with positive mechanical stops that limit the chamber travel to a maximum of 13 in. Should it be necessary, the length of the extension rod from the traveling nut to the chamber may be changed to permit a major position shift. This operation, however, requires removal of the chamber and can be done only after the reactor has been shut down for 24 hr or so. Figure 8.4.2 shows the ionization-chamber access tube layout.

8.5. Other Nuclear Control Systems

Counting rate and counting-rate period information is developed by the counting channel and is displayed for the operator on individual strip-chart recorders installed in the control panel. The channel is

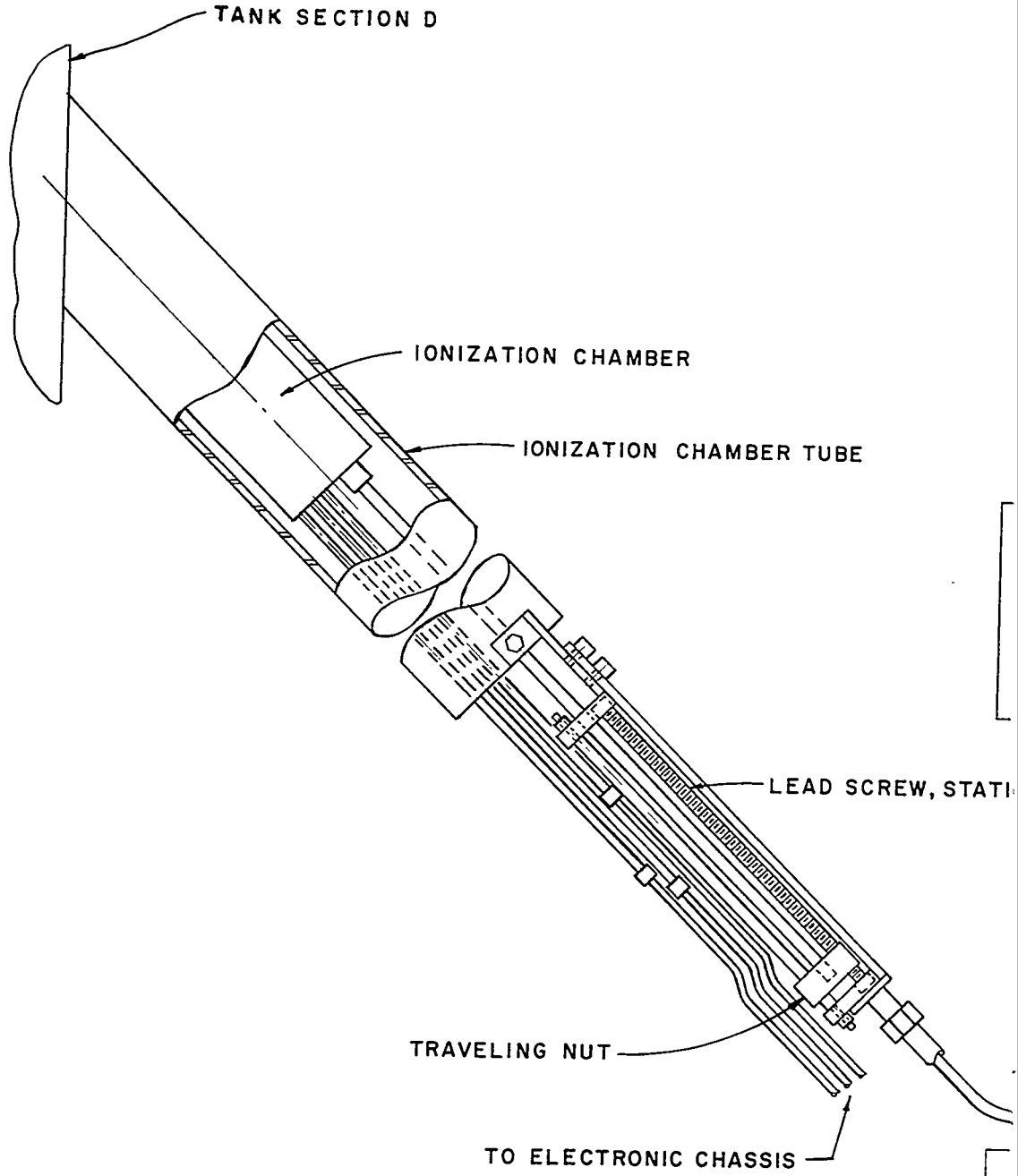
TANK SECTION D
IONIZATION CHAMBER
IONIZATION CHAMBER TUBE
LEAD SCREW, STATI
TRAVELING NUT
TO ELECTRONIC CHASSIS

Fig. 8.4.1. I

ORNL DWG. 67-5016

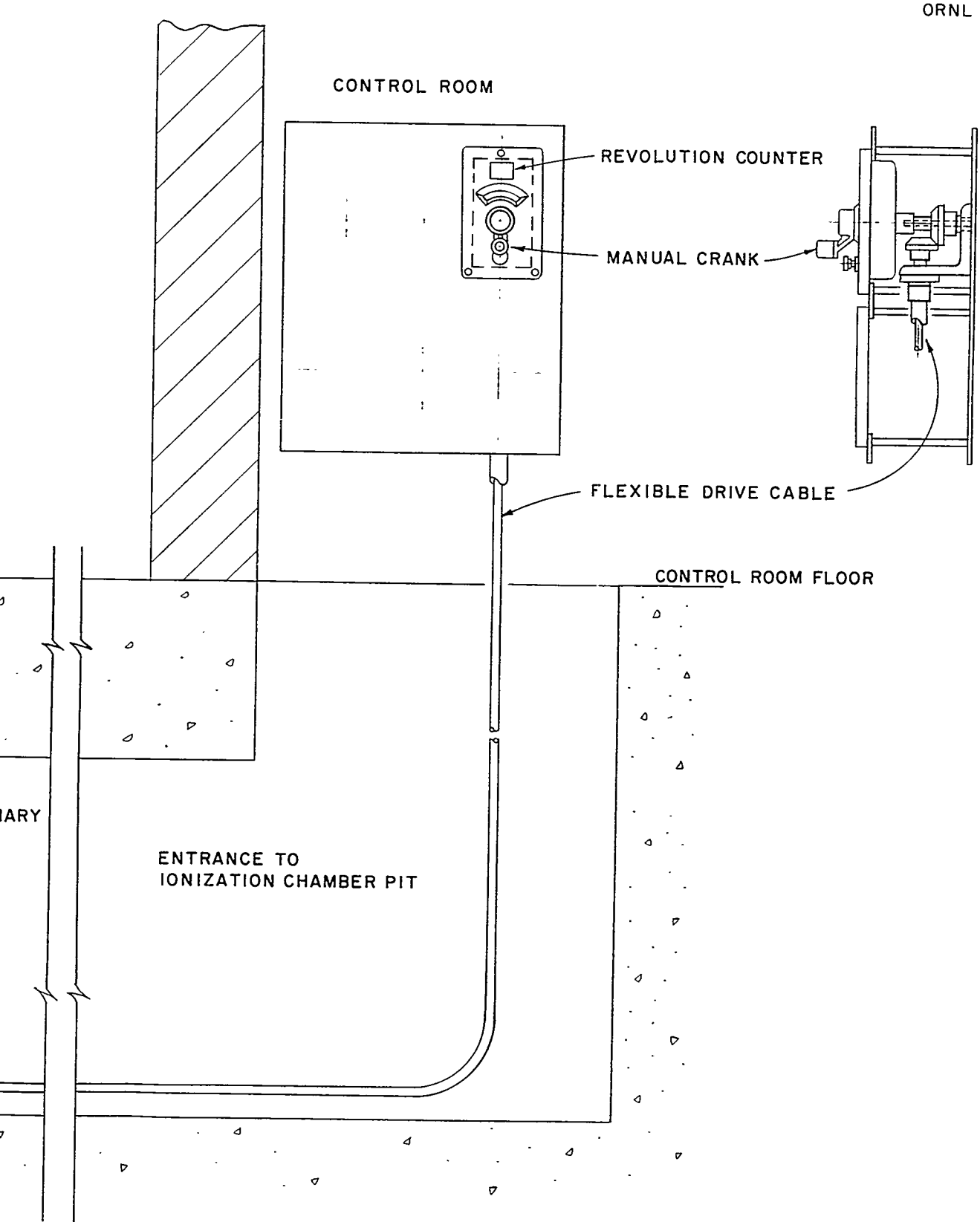

ization Chamber Positioning Device

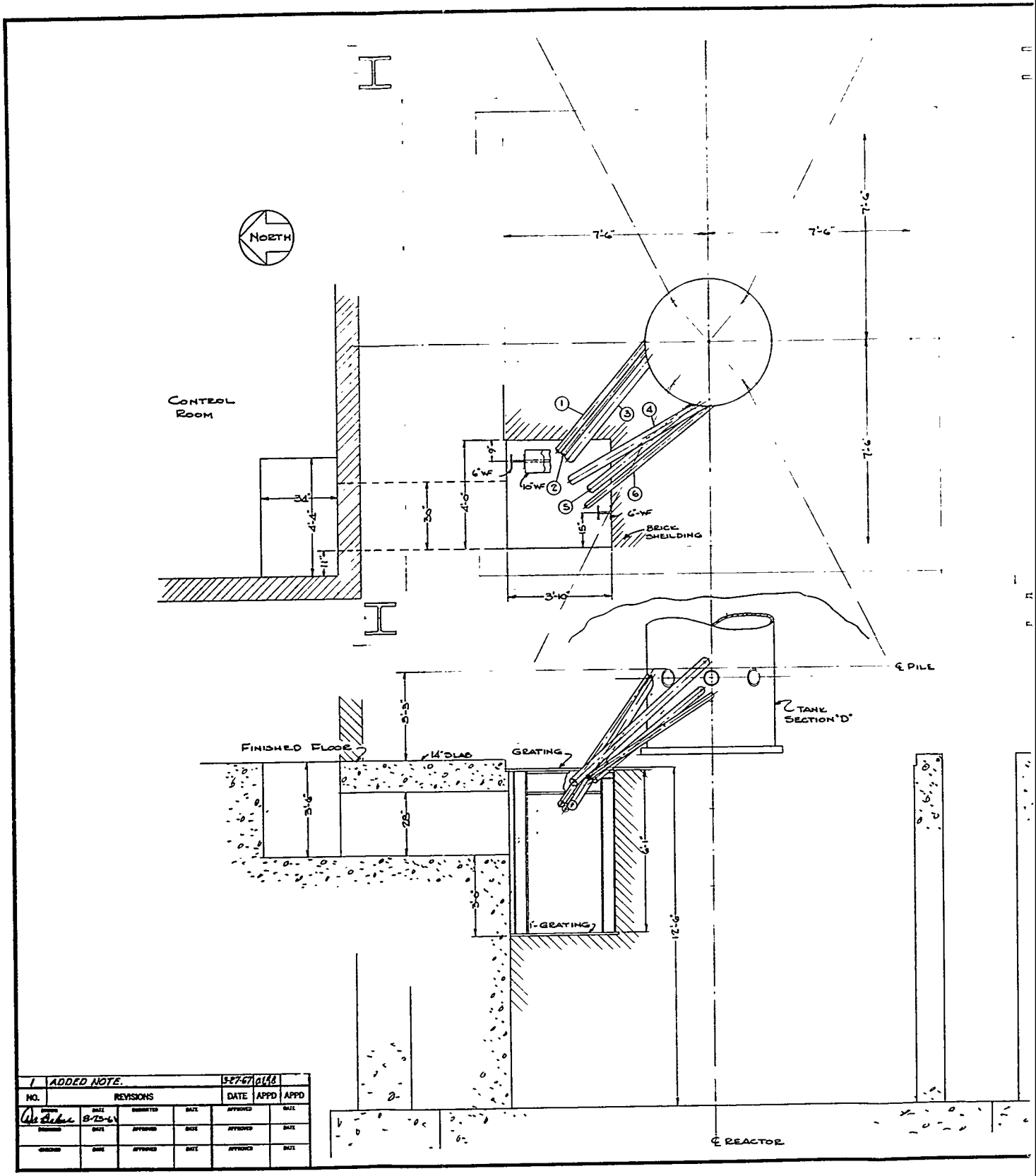

Fig. 8.4.2. Ionization Chamber

TUBE	O.D.	I.D.	LENGTH	END CLEARANCE
1	2.5"	2.375"	6'-9"	4'-0"
2	3.5"	3.25"	6'-6"	4'-6"
3	4.5"	4.375"	6'-3"	5'-3"
4	4.0"	3.75"	7'-0"	3'-10"
5	3.5"	3.25"	5'-11"	4'-1"
6	2.5"	2.25	6'-6"	2'-9"

℄ REACTOR

NOTE:

ARRANGEMENT DEVELOPED FROM PHOTOGRAPHS OF THE REACTOR VESSEL AND PHOTOGRAPHS AND DIMENSIONS TAKEN FROM THE CHAMBER PIT. ACTUAL LOCATION OF POINTS AT WHICH TUBING IS ATTACHED TO VESSEL IS UNKNOWN AND CAN NOT BE DETERMINED ACCURATELY WITHOUT REMOVING THE SHIELDING.

REFERENCE DRAWINGS	DWG. NO.
DESIGN RESPONSIBILITY	
L.I.T.R.	BLDG. 3005
TUBING LAYOUT	

INSTRUMENTATION AND CONTROLS DIVISION
OAK RIDGE NATIONAL LABORATORY
OPERATED BY
UNION CARBIDE NUCLEAR COMPANY

SUBMITTED	ACCEPTED	DATE	APPROVED	DATE
			RC12-6-1F R1	

bing Layout

part of the control system and, through recorder-actuated switches, exercises certain control functions that are described later. The log-N system and the power-level recorders also have control functions.

8.5.1. Counting Channels

Although only one counting channel is necessary for reactor operation, the LITR is fitted with two fission chambers, drives, and sets of electronics for increased reliability and to allow servicing of one channel during operation of the reactor. There is only one set of recorders (counting rate and period), and these may be selected for use with either channel by means of a switch. The counting instrumentation is capable of covering four decades or more in going from shutdown to full-power conditions.

To increase the range of the channel, the fission chambers may be withdrawn in steps from their startup positions near the reactor tank back into the shielding (see Figs. 8.5.1 and 8.5.2). Unfortunately, the flux changes slowly with distance in the LITR (shielding is concrete block and sand); and there is room to move the lower or No. 1 chamber only far enough (about 70 in.) to increase its range about two decades or so. Startups are made satisfactorily, however, since the reactor flux will be well into the range of the log-N channel by the time the upper end of the counting channel is reached. In order to keep the count-rate recorder reading on scale at full power, it is necessary to decrease the "gain" setting of the amplifier. The chamber drive mechanism for the No. 1 channel is the chain-driven type, powered by a single-phase, capacitor start and run, reversible motor. The mechanism is protected by the usual limit switches; and these same switches, through the use of lights on the operator panel board, indicate if the chamber is fully inserted or completely withdrawn.

The No. 2 fission chamber is installed in the V-1 vertical hole which is deep enough to permit all necessary chamber retraction (about 12 ft). The chamber is light enough to be supported by its signal cable, and this plus the lack of head room above the hole and the amount of chamber motion required make a cable reel a good choice for the chamber-positioning drive. There is one problem: How to handle the cable which

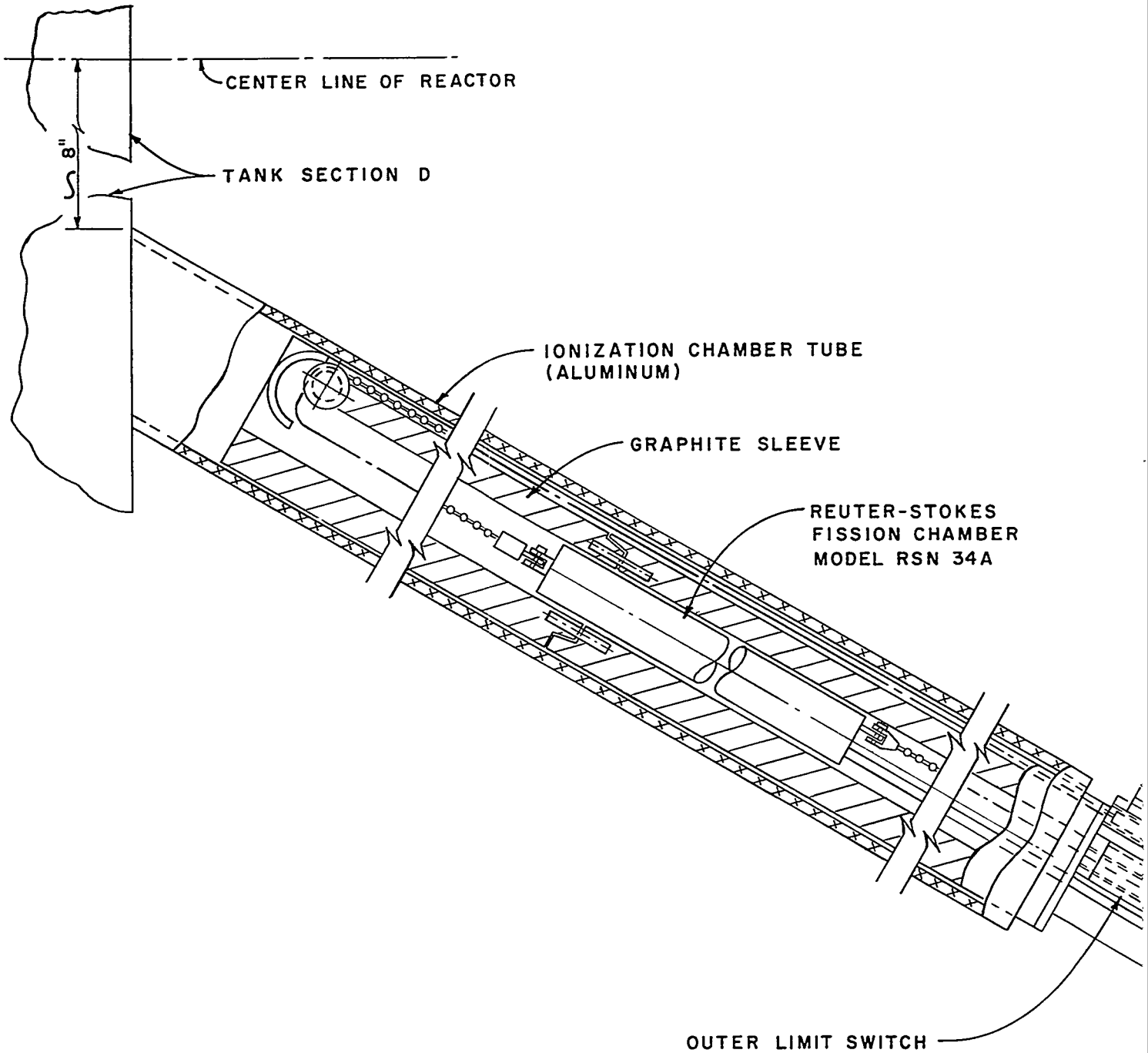

Fig. 8.5.1. No. 1 Fission Chamber Pos

ORNL DWG. 67-5017

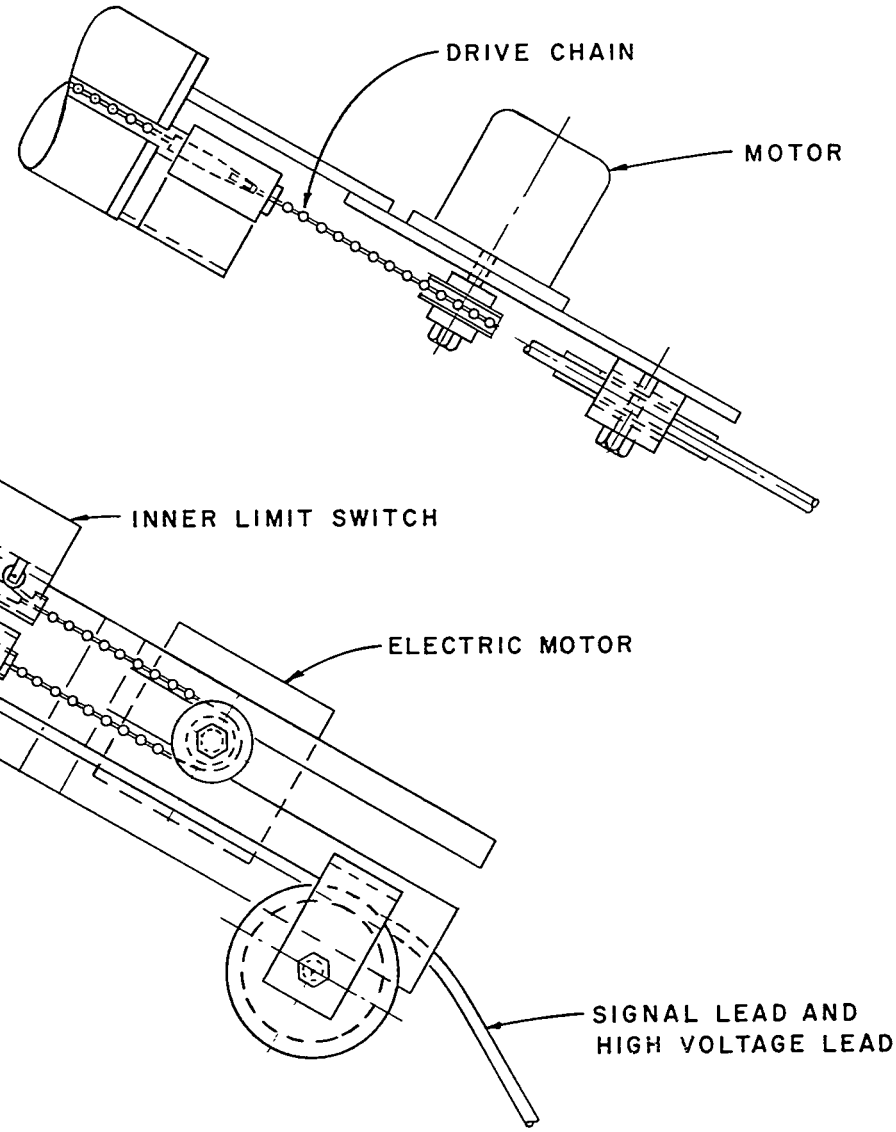

tioning Device, LITR

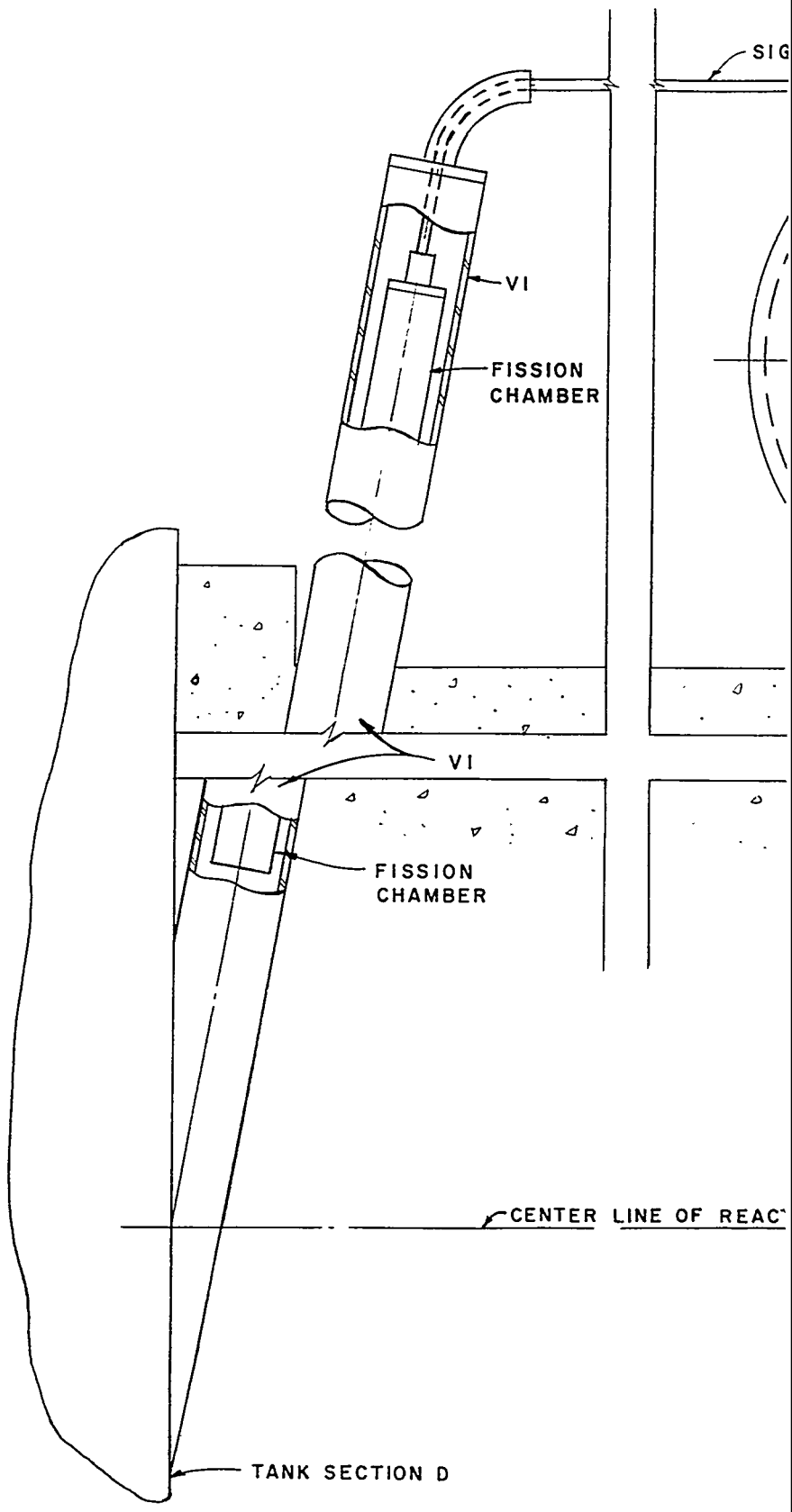
SIG
VI
FISSION
CHAMBER
VI
FISSION
CHAMBER
CENTER LINE OF REAC
TANK SECTION D

Fig. 8.5.

ORNL DWG. 67-5018

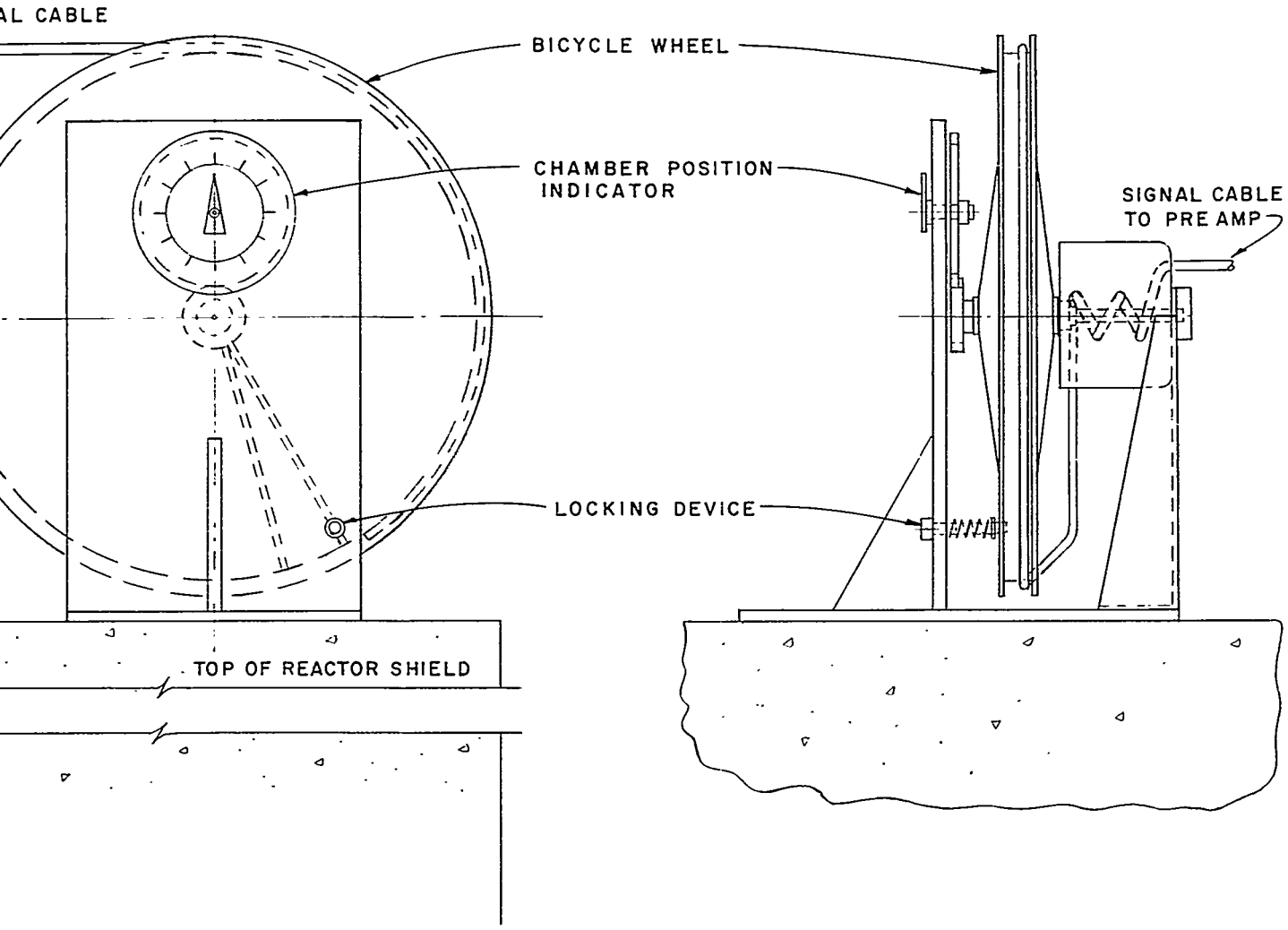

R

No. 2 Fission Chamber Positioning Device, LITR

extends from the reel axis to the preamplifier. Twisting of the cables should be avoided, and sliding contacts are not acceptable. This problem was solved in the LITR mechanism by the use of two reels on the same shaft, a small diameter one for the short cable (to the preamplifier) and a much larger one for handling the longer cable to the chamber. The large reel is simply a bicycle wheel, and the cable is wound in its rim. The total rotation of the reel assembly is less than 2 1/2 turns.

Both fission chambers are of standard manufacture (see Table 8.4.1) and were selected because they operate satisfactorily in the LITR's relatively high gamma field and ambient temperature. They have ample sensitivity and good plateaus and are physically small (1-in. OD). The gamma flux and high ambient temperature embrittles and otherwise damages the insulation of the cables to all chambers; and, in the case of the fission chambers where bending is involved, their life may be as short as twelve months. Ionization-chamber cables last appreciably longer since they normally remain practically undisturbed once installed.

8.5.2. Log-N Channel

The log-N channel consists of a compensated ionization chamber, a log-N amplifier, and two recorders, one to display reactor period and one for log-of-flux information. The chamber is one part of an ORNL PCP II, multiple-section chamber (see Table 8.4.1); the other, an uncompensated section, supplies flux information to one power-level safety channel.

The log-N channel has control functions only and is effective from full power (N_F) downward five decades. Control action is initiated by switches in the log-N and log-N period recorders. The power-level and period information duplicates that of the counting channel within its working range but is appreciably superior as far as accuracy and speed of response to changing conditions is concerned. Log-N power-level information overrides that from the counting channel at powers above 10^{-5} N_F.

Log-N confidence is a term denoting that the power level is high enough that the log-N channel is operating. It is attained during start-up when the channel indicates the reactor power to be greater than 10^{-5} N_F. Other conditions necessary are that the "calibrate" switch be set to Operate and that the trouble monitor indicate no system failures.

Advantage is taken of the fast response of the log-N period circuitry to prevent "startup" accidents. While reactor protection is the prime function of the power-level safety channels, the log-N channel can recognize that a potentially hazardous power-increase condition exists while the reactor power is as much as five to six decades below N_F and, by initiating a reactor scram, could stop the excursion before it rises beyond the allowable power range. A signal from the log-N amplifier is fed through suitable period-detecting and circuit-isolating electronics to the sigma bus of the safety system. When positive periods shorter than about one second occur in the reactor, the signal from the log-N period amplifier to the sigma bus is sufficient to reduce all the magnet amplifiers output current to the point where the shim-safety rods drop and scram the reactor.

The log-N channel is not part of the ultimate reactor protection system and is not, therefore, supplied in multiple. The log-N channel, as pointed out above, is isolated from the protection system in such a way that it cannot interfere with the latter's operation.

8.5.3. Servo System

The LITR servo system, presented in block form in Fig. 8.3.1, is of the velocity type giving a motor shaft speed proportional to the magnitude of the input (error) signal. The partial schematic diagram (Fig. 8.5.3) shows how the error signal is formed. The ionization chamber current, in flowing through the motor driven logarithmic rheostat, develops a flux-proportional voltage. This voltage is added to another in the reference voltage network and is applied to the grid of vacuum tube V_1. The plate-to-cathode resistance of V_1 is controlled by the voltage applied to its grid, and for one particular grid voltage will be just equal to the resistance of R_b. In this condition the error signal will be zero. Circuit constants are designed so that the error is zero when the

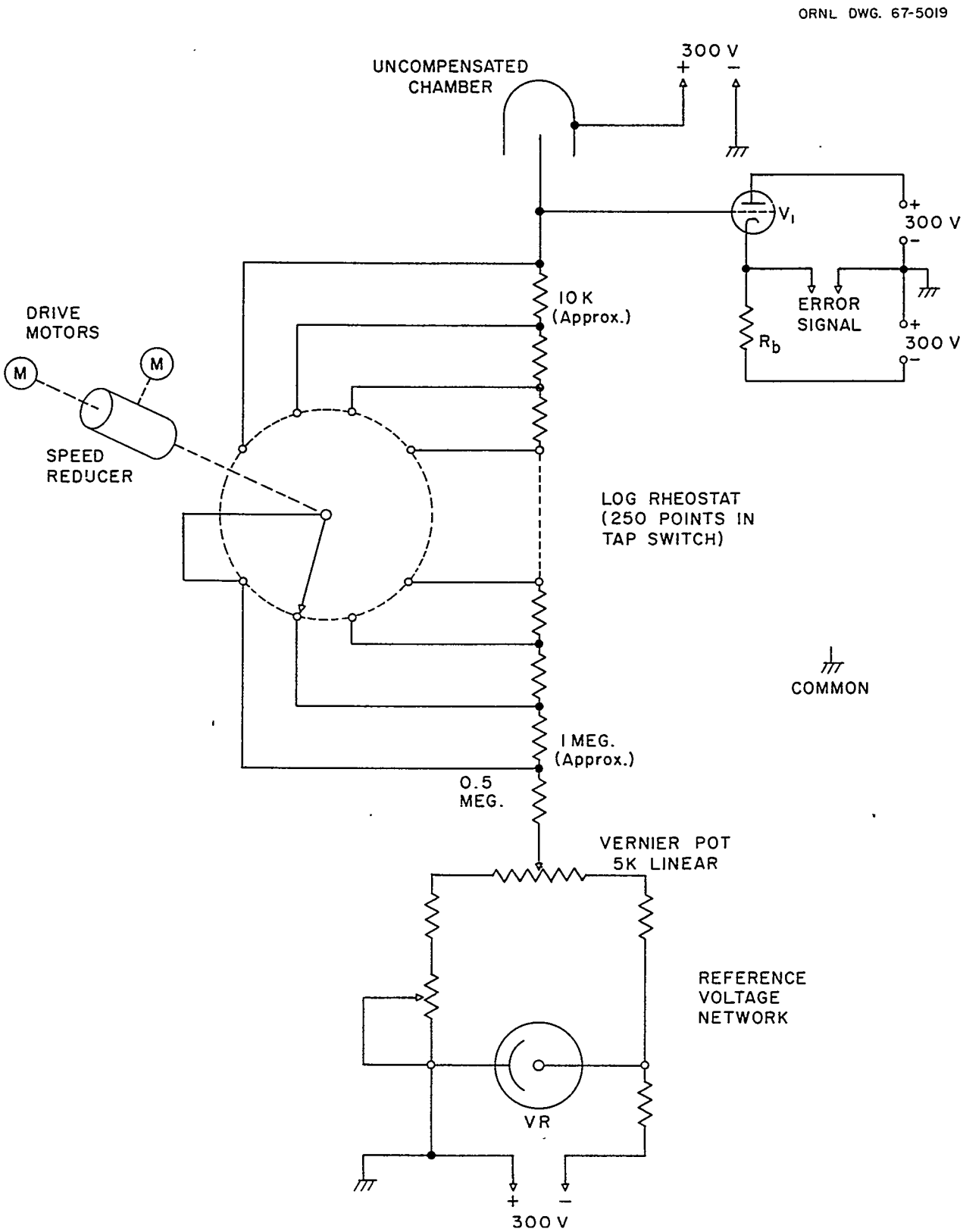

Fig. 8.5.3. Partial Elementary Diagram of Servo Input

reactor is operating at the desired power level. If the chamber current increases (power increases), the voltage on the grid of V_1 goes in the positive direction and this reduces the resistance of V_1. The resulting positive error signal is interpreted by the servo amplifier as a request for insertion of the regulating rod. If the neutron flux falls, developing a negative error signal, the servo response is to withdraw the regulating rod. The larger the error signal in each case, the faster the rod is moved.

The particular function of the motor-operated rheostat is to permit adjusting the reactor neutron flux (reactor control in the "servo" mode) to the desired level (demand) within the "power" range or from N_L (1% of full power in the LITR) to N_F, full power. At high power-demand settings, the resistance of the motor-operated rheostat is small; thus, a relatively large chamber current is necessary to develop a zero error signal. Conversely, at low power-demand settings, the resistance is large since the chamber current is small. The rheostat is of the step type, and its resistance changes approximately exponentially with angular displacement of its shaft. There is a total of 250 steps, and the resistance value per step is proportional to the total resistance up to that step. The total resistance is adjustable from a minimum value of 500,000 ohms to a maximum of 50 megohms, the smallest step being about 10,000 ohms and the largest about 1 megohm. The name "Logarithmic Potentiometer" is sometimes applied to this device since it has connections to both ends of its resistance element. Its application in the LITR is that of an adjustable resistance or rheostat, however, and not a voltage divider.

For raising the reactor power from N_L to N_F, a 20-sec period is selected to provide a safe but reasonably rapid power-increase rate. Under such conditions, the current through the motor-operated rheostat would be rising exponentially; and, if the motor-operated rheostat shaft is rotated at the correct angular velocity, its resistance will be decreasing exponentially and the servo error signal will remain zero. This means that once the regulating rod has withdrawn sufficiently to establish the 20-sec period, it will thereafter remain stationary until the demand point is reached. The motor-operated rheostat is equipped with a two-speed drive permitting both 20- and 90-sec power increase and

decrease periods. The 90-sec period capability was considered important for the MTR but is used in the LITR only occasionally, and then only because it is available. The actual time required to make the two-decade power-level change is 90 sec for the fast rate and 7 min for the slow rate.

It is important that the rheostat not turn more than one cycle to prevent turning from the 50 to the 0.5 megohm values in one step. Limit switches backed by positive mechanical stops prevent this (see Table 8.5.1). Because of the stops, it is necessary to add a friction clutch in the rheostat shaft to protect the drive motors, should a limit switch fail. A single turn synchro transmits rheostat position information to an indicator on the reactor panel.

The motor-operated rheostat adjusts the power demand in steps; and, while these are reasonably small, there are occasions when intermediate values are desirable or necessary. The "Vernier Pot" (Fig. 8.5.3, partial elementary) permits close settings to be made. It is connected in the reference voltage network and has a range of control slightly greater than one step of the motor-operated rheostat.

The regulating-rod drive motor exerts an accelerating force of 1.3 g on the rod, and withdrawal velocities reach 4 fps. The motor is powered from a 1500-w amplidyne generator whose output voltage is proportional to the difference in currents flowing in its fields. The function of the servo amplifier is to establish this current differential as proportional to the error signal. Since the error signal is "single ended", the servo amplifier also converts it into a "push-pull" output to suit the amplidyne fields. The velocity-proportional voltage from the rod-drive tachometer is fed back to the servo amplifier where it is added in opposition to the error voltage to compensate for rod and drive momentum. The rod decelerating switches ("B" and "E" in Fig. 8.5.4, Logic Diagram of Control) are connected to the servo amplifier and, when tripped, reduce the amplifier's differential output and thus the amplidyne's output and the motor's speed.

The control action of the servo in <u>reducing</u> the reactor power is backed up by the shim-safety rods. A selector switch enables the operator to select any one of the shim-safety rods to be the initial backup

Table 8.5.1. Servo System Limit Switches

Switch Designation	Location	Action
		Motor-Operated Rheostat Switches
Motor-operated rheostat lower limit switch	On the rheostat	Actuation of the switch stops the motor and prevents the rheostat arm from being driven too far in the low direction
Motor-operated rheostat upper limit switch	On the rheostat	Actuation of the switch stops the motor and prevents the rheostat arm from being driven too far in the low direction
		Regulating-Rod Switches[a]
A	On the drive shaft of the regulating rod	This switch is set to operate when the regulating rod is 17 in. withdrawn. When the rod is at or above this point, further withdrawal of the rod is automatically prevented
B	On the drive shaft of the regulating rod	The switch is set to operate when the rod is 15 in. withdrawn. Above this point, the servo can be turned on. Below, it is possible to go into "run" if the servo is on. Also, above this position the amplifier's differential output and thus the amplidyne's output are reduced
C	On the drive shaft of the regulating rod	The switch is set to operate when the rod is 11 in. withdrawn. When the regulating rod is below this point, the selected shim rod cannot be withdrawn but it can be inserted. When the regulating rod is above this point, the selected shim rod can be either withdrawn or inserted
D	On the drive shaft of the regulating rod	The switch is set to operate when the regulating rod is 7 in. withdrawn. When the rod is below this point, the "preferred" shim rod is automatically inserted
E	On the drive shaft of the regulating rod	The switch is set to operate when the regulating rod is 6 in. withdrawn. When the rod is below this point, all shim rods are automatically reversed
F	On the drive shaft of the regulating rod	The switch is set to operate the regulating rod is 4 in. withdrawn. When the rod is at or below this point, further insertion of the rod is automatically prevented

[a]The A switches are also explained in Fig. 8.5.4.

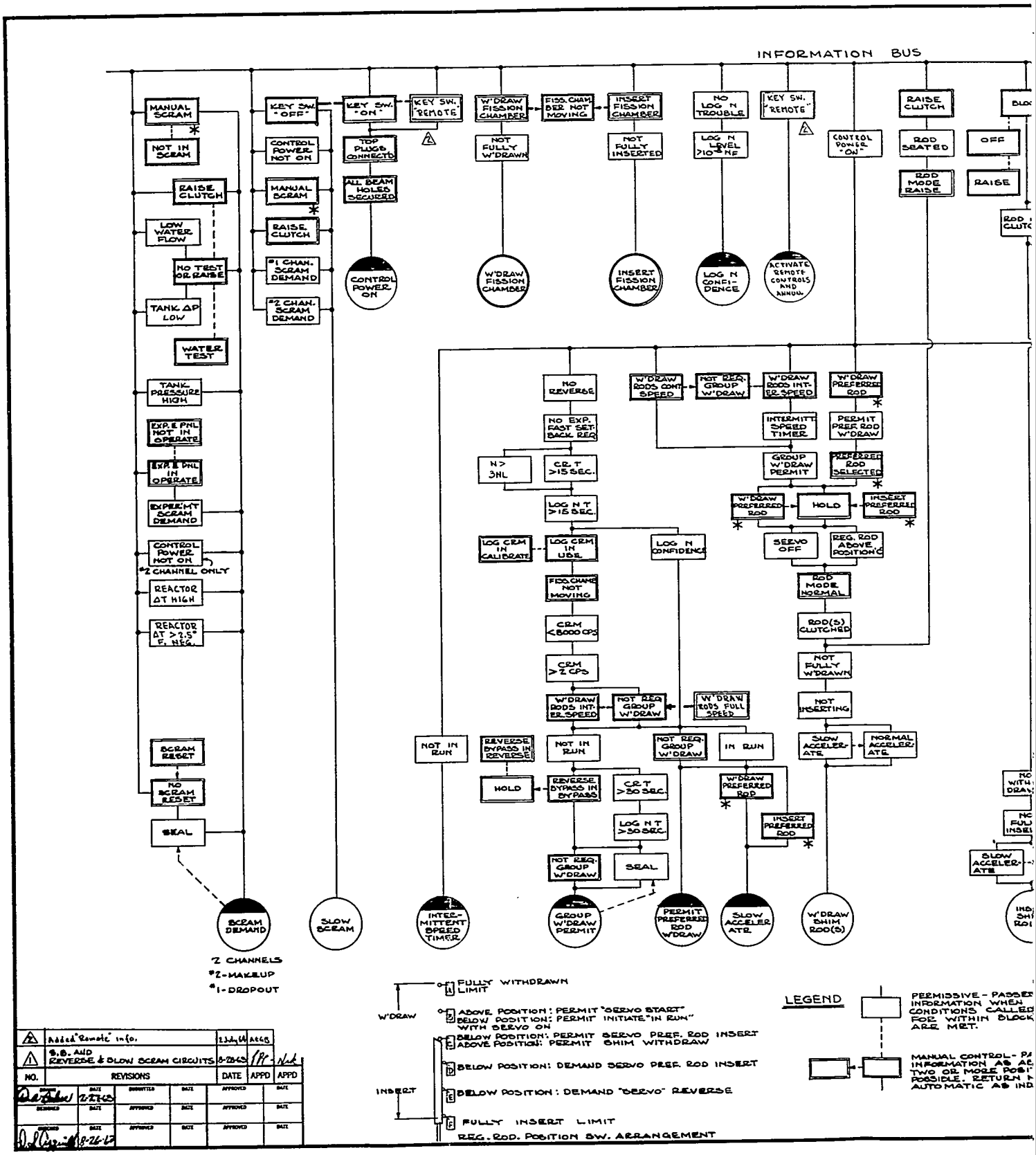

Fig. 8.5.4. Logic Diagram of

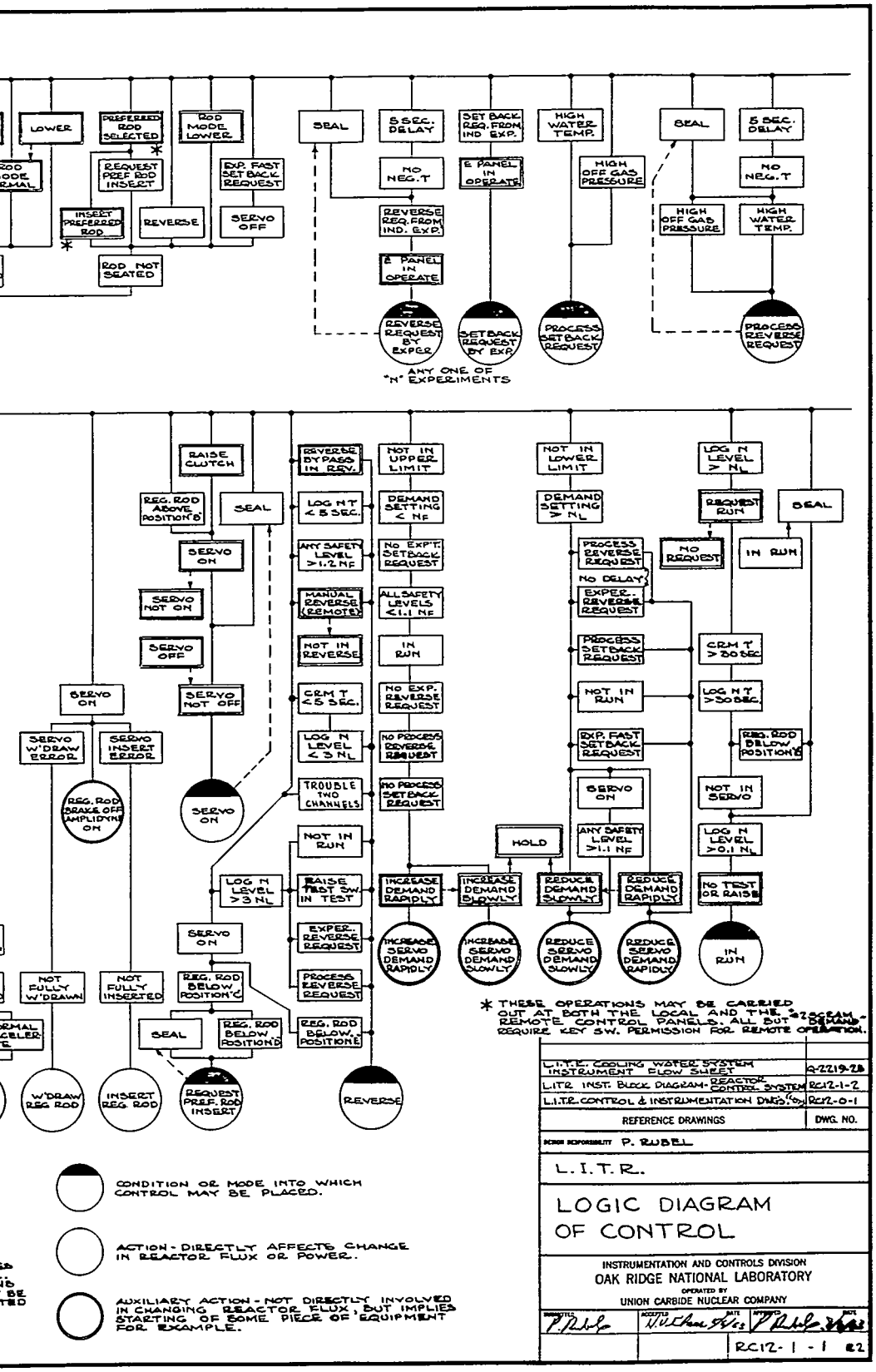
LOWER
PREFERRED ROD SELECTED
ROD MODE LOWER
REQUEST PREF ROD INSERT
EXP. FAST SET BACK REQUEST
INSERT PREFERRED ROD
REVERSE
SERVO OFF
ROD NOT SEATED
SEAL
5 SEC. DELAY
SET BACK REQ. FROM IND. EXP.
HIGH WATER TEMP.
NO NEG. T
E PANEL IN OPERATE
HIGH OFF GAS PRESSURE
REVERSE REQ. FROM IND. EXP.
REVERSE REQUEST BY EXPER
SETBACK REQUEST BY EXP.
PROCESS SETBACK REQUEST
PROCESS REVERSE REQUEST
ANY ONE OF "N" EXPERIMENTS
RAISE CLUTCH
REG. ROD ABOVE POSITION 'B'
SERVO ON
SERVO NOT ON
SERVO OFF
SERVO NOT OFF
SERVO W'DRAW ERROR
SERVO INSERT ERROR
REG. ROD BRAKE OFF AMPLIDYNE ON
NOT FULLY W'DRAWN
NOT FULLY INSERTED
REG. ROD BELOW POSITION 'C'
REG. ROD BELOW POSITION 'D'
W'DRAW REG ROD
INSERT REG ROD
REQUEST PREF. ROD INSERT
REVERSE BYPASS IN REV.
LOG N T < 5 SEC.
ANY SAFETY LEVEL > 1.2 NF
MANUAL REVERSE (REMOTE)
NOT IN REVERSE
CRM T < 5 SEC.
LOG N LEVEL < 3 NL
TROUBLE TWO CHANNELS
NOT IN RUN
LOG N LEVEL > 3 NL
RAISE TEST SW. IN TEST
EXPER. REVERSE REQUEST
PROCESS REVERSE REQUEST
REG. ROD BELOW POSITION 'E'
NOT IN UPPER LIMIT
DEMAND SETTING < NF
NO EXP'T. SETBACK REQUEST
ALL SAFETY LEVELS < 1.1 NF
IN RUN
NO EXP. REVERSE REQUEST
NO PROCESS REVERSE REQUEST
NO PROCESS SETBACK REQUEST
HOLD
INCREASE DEMAND RAPIDLY
INCREASE DEMAND SLOWLY
INCREASE SERVO DEMAND RAPIDLY
INCREASE SERVO DEMAND SLOWLY
NOT IN LOWER LIMIT
DEMAND SETTING > NL
PROCESS REVERSE REQUEST
NO DELAY
EXPER. REVERSE REQUEST
PROCESS SETBACK REQUEST
NOT IN RUN
EXP. FAST SETBACK REQUEST
SERVO ON
ANY SAFETY LEVEL > 1.1 NF
REDUCE DEMAND SLOWLY
REDUCE DEMAND RAPIDLY
REDUCE SERVO DEMAND SLOWLY
REDUCE SERVO DEMAND RAPIDLY
LOG N LEVEL > NL
REQUEST RUN
NO REQUEST
IN RUN
CRM T > 30 SEC.
LOG N T > 30 SEC.
REG. ROD BELOW POSITION 'E'
NOT IN SERVO
LOG N LEVEL > 0.1 NL
NO TEST OR RAISE
IN RUN
REVERSE
* THESE OPERATIONS MAY BE CARRIED OUT AT BOTH THE LOCAL AND THE REMOTE CONTROL PANELS. ALL BUT "SERVO DEMAND" REQUIRE KEY SW. PERMISSION FOR REMOTE OPERATION.
CONDITION OR MODE INTO WHICH CONTROL MAY BE PLACED.
ACTION - DIRECTLY AFFECTS CHANGE IN REACTOR FLUX OR POWER.
AUXILIARY ACTION - NOT DIRECTLY INVOLVED IN CHANGING REACTOR FLUX, BUT IMPLIES STARTING OF SOME PIECE OF EQUIPMENT FOR EXAMPLE.
L.I.T.R. COOLING WATER SYSTEM INSTRUMENT FLOW SHEET
L.I.T.R. INST. BLOCK DIAGRAM - REACTOR CONTROL SYSTEM
L.I.T.R. CONTROL & INSTRUMENTATION DWG.
REFERENCE DRAWINGS
DWG. NO.
P. RUBEL
L. I. T. R.
LOGIC DIAGRAM OF CONTROL
INSTRUMENTATION AND CONTROLS DIVISION
OAK RIDGE NATIONAL LABORATORY
OPERATED BY
UNION CARBIDE NUCLEAR COMPANY
RC12-1-1

ntrol

of the servo rod. The selected rod is referred to as the "preferred" rod. When the regulating rod is inserted until control switch "D" (Fig. 8.5.4) is actuated, the preferred rod is automatically inserted until the regulating rod withdraws sufficiently to open switch "D". If the regulating rod continues to be inserted, however, until switch "E" is actuated, insertion of all three shim-safety rods is initiated.

8.6. Process System

The cooling water system, monitored by process instrumentation, includes a seal tank, circulating pumps, heat exchangers, a strainer, and a by-pass filter (Fig. 8.6.1). During operation of the reactor, 1200 gpm of highly demineralized water is recirculated in the system as described in Section 6 of this report. The system is arranged so as to be almost entirely manually operated; however, instrumentation is employed to prevent continuation of two undesirable conditions. The pump is stopped by either of two pressure switches if the reactor vessel pressure rises too high. Also, the pump cannot be started unless either the reactor vessel exit water line or the reactor-vessel by-pass water valve is fully open. Both of these controls obviously protect the reactor vessel from overpressure.

Specific control set points and other data of various instrument channels are listed in Table 8.6.1. The criteria for selection of parameters to be monitored as well as the methods used to perform control, warning, and other safety functions are, with one exception, similar to those employed in other ORNL-designed reactors such as the ORR or PCA and will not be described herein. The exception, the negative ΔT scram, is explained in Section 8.8.

To increase the reliability of the installation, the following instrumentation is doubled tracked:

1. Reactor-vessel pressure channel (both channels have independent alarm and scram functions).
2. Core ΔT channel (both have independent alarm and scram functions).
3. Outlet-temperature monitor (both have setback and reverse functions).

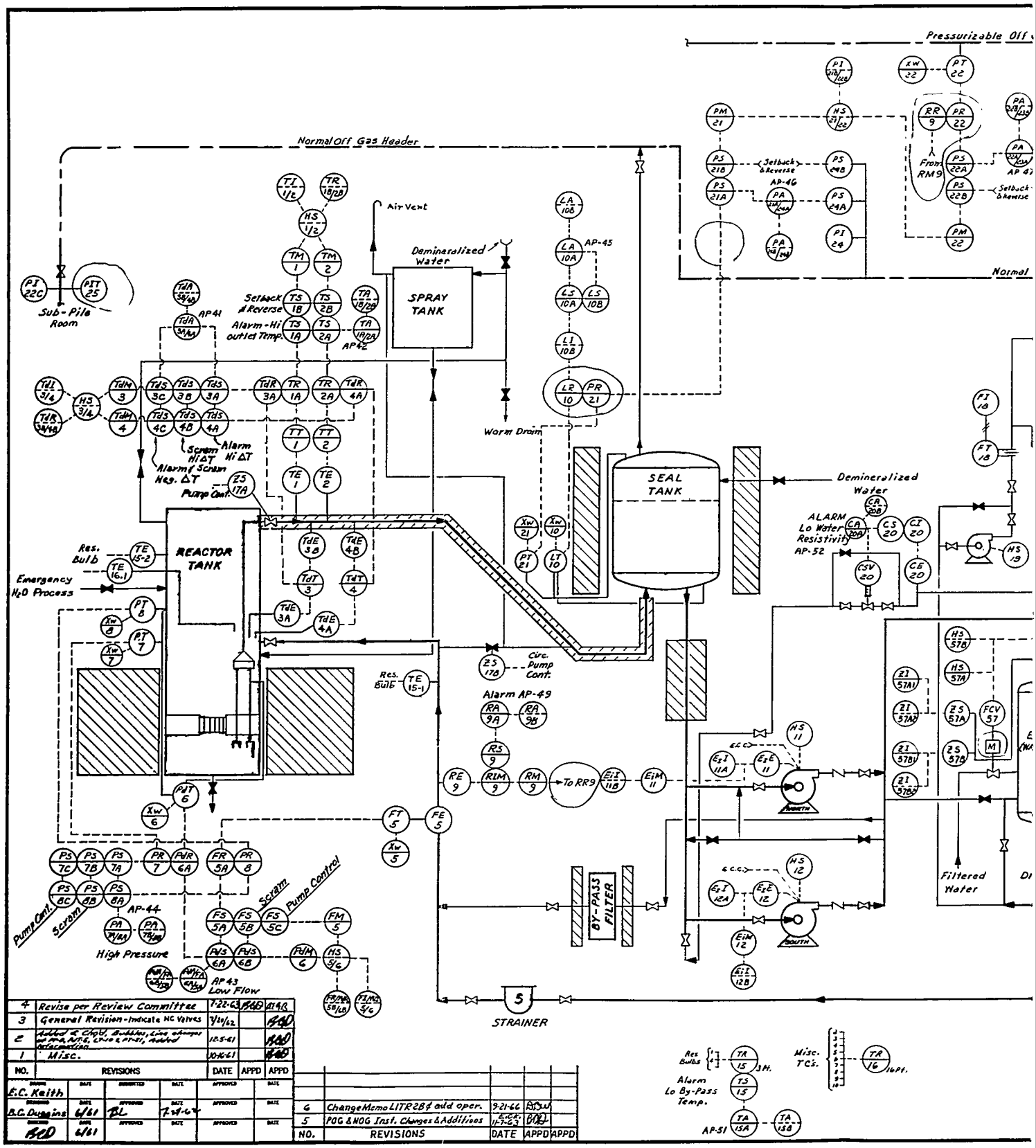

NO.	REVISIONS	DATE	APPD	APPD
4	Revise per Review Committee	7-22-63		
3	General Revision-Indicate NC Valves	7/10/62		
2	Added & Chgd. Bubbles, Line changes on PP-8, PP-6, LP-10 & PP-21, Added information	12-5-61		
1	Misc.	10-16-61		

NO.	REVISIONS	DATE	APPD	APPD
6	Change Memo LITR 284 add oper.	9-21-66		
5	POG & NOG Inst. Changes & Additions	11-7-63		

E.C. Keith	DATE	SUBMITTED	DATE	APPROVED	DATE
B.C. Duggins	6/61	APPROVED	DATE	APPROVED	DATE
	6/61	APPROVED	DATE	APPROVED	DATE

Fig. 8.6.1. Primary Water Flow Diagram Show

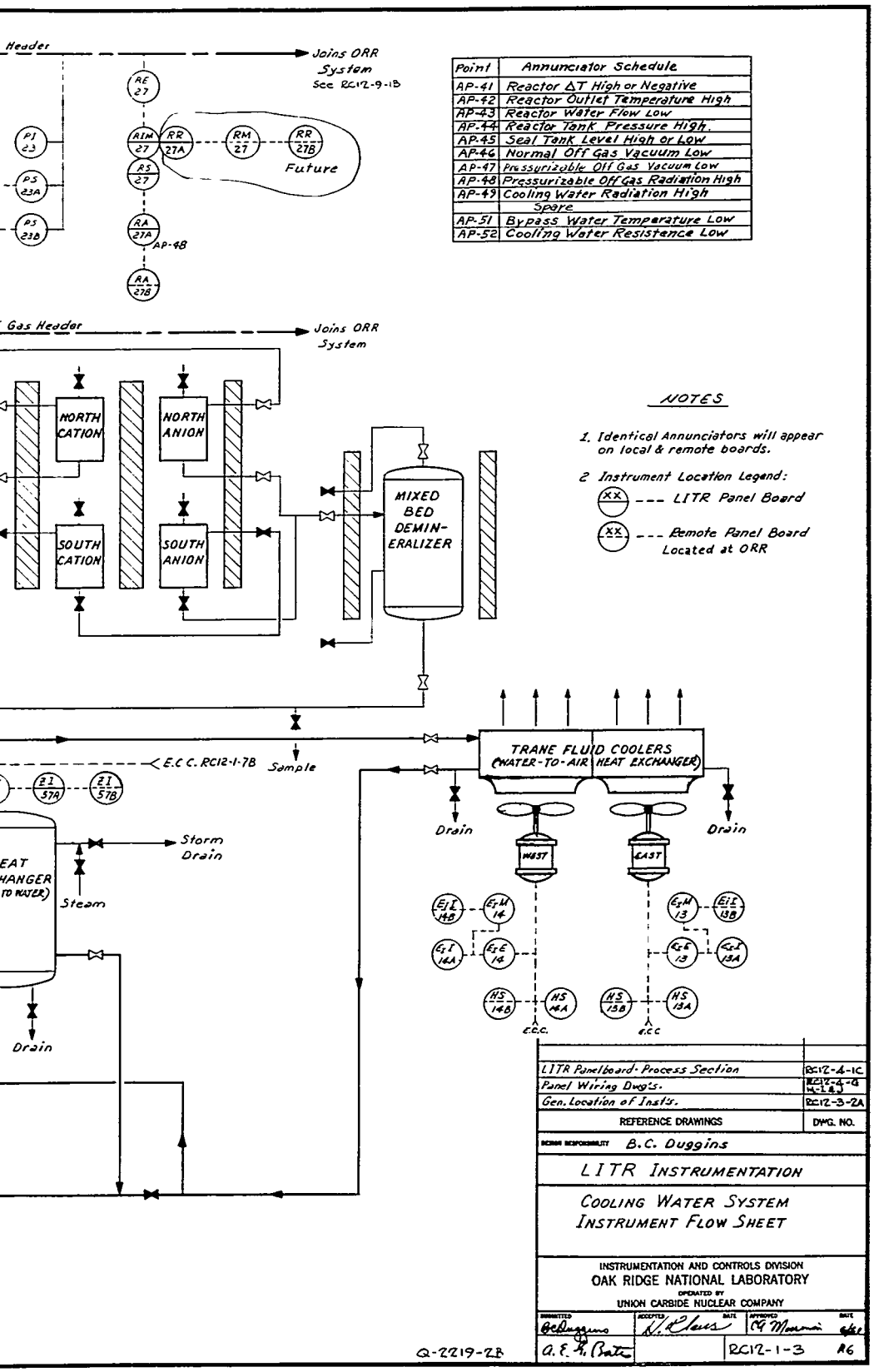

Point	Annunciator Schedule
AP-41	Reactor ΔT High or Negative
AP-42	Reactor Outlet Temperature High
AP-43	Reactor Water Flow Low
AP-44	Reactor Tank Pressure High.
AP-45	Seal Tank Level High or Low
AP-46	Normal Off Gas Vacuum Low
AP-47	Pressurizable Off Gas Vacuum Low
AP-48	Pressurizable Off Gas Radiation High
AP-49	Cooling Water Radiation High
	Spare
AP-51	Bypass Water Temperature Low
AP-52	Cooling Water Resistence Low

NOTES

1. Identical Annunciators will appear on local & remote boards.
2. Instrument Location Legend:
   - (XX) --- LITR Panel Board
   - (XX) --- Remote Panel Board Located at ORR

REFERENCE DRAWINGS	DWG. NO.
LITR Panelboard-Process Section	RC12-4-1C
Panel Wiring Dwg's.	RC12-4-G H-1 & J
Gen. Location of Insts.	RC12-3-2A

DESIGN RESPONSIBILITY B.C. Duggins

LITR INSTRUMENTATION

COOLING WATER SYSTEM INSTRUMENT FLOW SHEET

INSTRUMENTATION AND CONTROLS DIVISION
OAK RIDGE NATIONAL LABORATORY
OPERATED BY
UNION CARBIDE NUCLEAR COMPANY

SUBMITTED B.C. Duggins | ACCEPTED N. K. Claus DATE | APPROVED C. M. Morris DATE 6/61

A. E. H. Bates | RC12-1-3 | R6

Table 8.6.1. LITR Process Instrument Switch Information

Instrument No.	Range	Variable	Normal Value	Set Point	Action
TS-1A & 2A	50–150°F	Outlet temperature	120–131	140	Alarm
TS-1B & 2B	40–150°F	Outlet temperature	120–131	145	Setback and reverse
TdS-3A & 4A	−5 to +25°F	Reactor ΔT	17.1	20	Alarm (high ΔT)
TdS-3B & 4B	−5 to +25°F	Reactor ΔT	17.1	25	Scram (high ΔT)
TdS-3C & 4C	−5 to +25°F	Reactor ΔT	17.1	−2.5	Actuates K-41 and K-42 (alarm and scram, negative ΔT)
FS-5A	0–1600 gpm	Water flow	1200	1000	Alarm
FS-5B	0–1600 gpm	Water flow	1200	600	Scram
FS-5C	0–1600 gpm	Water flow	1200	600	Pump shutdown
PdS-6A	0–60 in. H_2O	Reactor ΔP	45	31.3	Alarm
PdS-6B	0–60 in. H_2O	Reactor ΔP	45	11.3	Scram
PS-7A & 8A	0–100 in. H_2O	Reactor pressure	56	75	Alarm
PS-7B & 8B	0–100 in. H_2O	Reactor pressure	56	95	Scram
PS-7C & 8C	0–100 in. H_2O	Reactor pressure	56	95	Pump shutdown
RS-9		Water activity		Twice normal activity	Alarm
LS-10A	75 in. H_2O	Seal-tank level	43	36	Alarm (low)
LS-10B	75 in. H_2O	Seal-tank level	43	50	Alarm (high)
TS-15	0–150°F	Water inlet or by-pass temperature	60	40	Alarm
PS-21A	0–50 in. H_2O	NOG[a] vacuum	18	15	Alarm
PS-24A	6–20 in. H_2O	NOG vacuum	18	15	Alarm
PS-21B	0–50 in. H_2O	NOG vacuum	18	6	Setback and reverse
PS-24B	6–20 in. H_2O	NOG vacuum	18	6	Setback and reverse
PS-22A	0–50 in. H_2O	POG[b] vacuum	45	25	Alarm
PS-23A	12–40 in. H_2O	POG vacuum	45	25	Alarm
PS-22B	0–50 in. H_2O	POG vacuum	45	15	Setback and reverse
PS-23B	12–40 in. H_2O	POG vacuum	45	15	Setback and reverse
RS-27		Off-gas activity		Ten times normal activity	Alarm
ZS-17A		Outlet water valve position	Valve open	Valve open	Pump shutdown
ZS-17B		Bypass water valve position	Valve closed	Valve closed	Pump shutdown

[a]Normal off-gas system.
[b]Pressurizable off-gas system.

4. Coolant flow--single ΔP monitor across the reactor core making, with the inlet-flow channel, two independent flow-monitoring channels, each having alarm and scram functions.

This installation is the first in which the ECI system of process control has been used at the Laboratory for reactor control. This system, however, is being used successfully in a large experimental test loop (GCR-1) installed in the ORR and in both the HFIR and MSRE.

In this system, a transmitter is used to sense pressure and by suitable means to convert the information into the form of an electric signal which can be used by other systems to actuate control (switches) or provide readout. To monitor a temperature, a proportional pressure generated in a thermal bulb is monitored. The transmitter is designed to provide an output current (signal) that is related solely to the process variable being monitored and is independent of the number of switch, recorder, or other auxiliary units connected into the loop circuit, for all practical applications. The range of current supplied by the converter to represent the range of the variable being monitored is 10 to 50 ma rather than zero to some maximum. One reason for such a choice is that it aids the operator in detecting systems that are not functioning, since the readout instruments will indicate the magnitude of the variable as being negative (less than zero) in such cases. The probability that a component or system failure will produce an upscale reading appears to be negligible.

The ECI system fits well into installations such as the LITR in which both local and remote control stations are needed and where both critical and noncritical signal circuits must be run to the remote station (see Section 8.13). Signal circuits whose loss due to some failure or malfunction can be described as nuisances more than anything else are classified as "noncritical", and their current loops are run directly through the remote station by means of underground cables. All other signal circuits are classified as critical, and their exposure in this fashion is considered unacceptable. This is solved by the use of standard ECI converters for each remote signal. In this system, a one-to-one current converter takes the signal from the local ECI converter and converts it into a separate, independent current that is then transmitted to

the remote console. Nothing can happen on the remote current loop that will be reflected in the local current because the one-to-one current converter acts like a transformer in that voltage changes on the usage side of a transformer are not passed through it to the originating side. These converters are installed at the local control station. Their inputs are connected directly into the current loops of the critical circuits, and their outputs go through the underground cables to the remote station. Due to the isolation provided within the converters, failures in the transmission cables or at the remote station will not violate the integrity or independence of the local critical circuits themselves; ECI converters are also used to transmit nuclear instrumentation outputs to the remote control station.

8.7. Control Logic

The logic of the control system is shown diagrammatically in Fig. 8.5.4. The control system has many features similar to those of other ORNL reactors.

1. A switch locks the control power <u>off</u> while the reactor is out of service and blocks all possibility of rod withdrawal.
2. Circuits and controls relating to the insertion of rods are not disabled by the key switch.
3. Insertion demands (reducing power) always override withdrawal requests.
4. There are several modes of operation:
   a. <u>Water Test</u> permits operation with zero water flow as long as the power level is less than 3 N_L. It is mainly used to make the safety circuits not involved with water flow available for testing at low reactor power.
   b. <u>Startup</u> is for use while increasing the power from zero to approximately N_L and is primarily used as a built-in reminder to the operator that he should analyze the startup situation before the reactor power is increased the last decade.
   c. <u>Run</u> is for operating the reactor in the power range, N_L upward.

d. Manual is for controlling the reactor manually while operating in either the start or run mode.

e. Servo On provides for automatic control of the reactor in the power range by the servo-regulating rod system.

5. There are four methods of power reduction:

a. Setback is initiated by:

(1) Any power-level safety channel if the power exceeds 1.1 N_F.

(2) Reactor process instrumentation if the temperature of the cooling water leaving the reactor is too high or if the off-gas line vacuum is insufficient.

(3) Experiments.

Setbacks reduce the operating power of the reactor by lowering the demand point of the servo system, but they leave the reactor under servo control so that it may easily be returned to full power by the operator once conditions become normal. A setback causes an orderly reduction of power which, in the case of experiments, for example, is quite as effective as a scram in most situations. Redundant channels are used for handling setback requests from experiments and from the off-gas and cooling water systems. If corrective action does not ensue within a delay period of approximately 5 sec after initiation, a time delay relay in the Reverse circuit closes and automatically causes all shim rods to be driven into the reactor. This overall arrangement enhances the reliability of the system appreciably. Since the setback reduces the servo demand, it is meaningless when the reactor is being operated manually in the power range; and corrective action is effected through the Reverse.

b. Reverse is the full-speed insertion of all three shim-safety rods simultaneously:

(1) By the operator through the use of the local or remote reverse switch.

(2) When the log-N period is less than 5 sec.

(3) When the count-rate period is less than 5 sec and the log-N level is less than 3 N_L.

(4) When any power-level safety recorder reading exceeds 1.2 N_F.

(5) When the trouble monitor detects failure in two safety channels or one safety channel and the log-N channel.

(6) When the regulating rod has been inserted beyond its operating limit by the servo, thus supplementing the action of the "preferred" rod in reducing the reactor power.

(7) When the log-N channel indicates that the reactor power level is above 3 N_L and:

   (a) The control system is not in the Run mode or is in the Water Test mode.

   (b) There is, under certain conditions, trouble in one of the experiments.

   (c) The temperature of the reactor exit water is too high.

   (d) The off-gas system vacuum is too low.

The reverses called for in 4, 6, 7b, 7c, and 7d, above, provide defense should the servo be incapable of making the desired reduction in reactor power. The action is blocked for 5 sec following the initiation of the reverse signal from these channels themselves and then is blocked entirely if a negative period exists. If the setback action is effective, a negative period will be generated and the reverse is not required. The effect of a reverse probably will be that the reactor is made sufficiently subcritical that the power will fall below the minimum level at which the servo is designed to control; the power will then continue to fall, and a restart will have to be made by the operator. The use of Reverse is, therefore, avoided when possible. When the reactor is being operated manually above 3 N_L, the setback signal produces the equivalent of a reverse by inserting all

three shim-safety rods simultaneously; the redundant action of the reverse follows in 5 sec, as before, if no negative period develops. In any case, a reverse continues as long as the causative condition remains.

c. Both Fast and Slow scrams produce rapid shutdown of the reactor by causing all shim-safety rods to be released from their drives so that they fall into the core under the influence of gravity (with a small assist from the cooling water when it is flowing). Release is brought about by de-energizing the electromagnets used to couple the drives and their respective shim-safety rods. Signals of unsafe conditions related to the neutron flux in the reactor core are processed electronically so that any delays are quite small, compared with those due to decay of the energy in the fields of the electromagnets, and produce what are defined as Fast scrams. Other scram signals are detected and/or handled by devices such as thermocouples and relays which are sluggish enough to add delays comparable with that of the electromagnets and produce the Slow scram.

(1) Fast scrams are initiated by any one or more of the three independent safety channels when neutron flux levels exceed 1.5 N_F and by the log-N channel if the reactor period becomes as short as 1 sec.

(2) Slow scrams result from:

(a) Placing the key switch in its Off position.

(b) Selecting the Raise-Clutch mode.

(c) Low flow of cooling water through the reactor, except in Water Test mode (two independent channels).

(d) High reactor-vessel pressure (two independent channels).

(e) Safeguard signals from experiments if a setback or a reverse cannot provide sufficiently prompt protection.

(f) Loss of reactor control power.

(g) Reactor positive ΔT too high (two independent channels).

(h) Reactor negative ΔT too high (two independent channels).

(i) Operation of manual switches (local and remote).

(j) Top-plug cable disconnected.

(k) Beam-hole key removed from electrical interlock.

Memory circuits are used in all ORNL reactor protective systems to help identify the sources of slow and fast scrams. The circuits are used to trigger suitable alarms and these must be reset (manual operation) before the alarms can be cleared. The slow-scram circuits seal in the scram condition and thus provide their own memory; but the fast-scram channels, being instantly responsive to changes in operating conditions, are self-clearing. A fast-scram memory, called the "scram catcher", is an auxiliary feature built into the safety and log-N sigma amplifiers.

7. Two shim-safety rod withdrawal rates (reactivity addition rates) are available to the operator: one rate is intended for the initial phase of normal reactor starts; and a second, and higher, rate is used for the last phase of normal startups and for making restarts when xenon poisoning is a problem. ORNL philosophy prescribes that all startups be effected by withdrawing all shim-safety rods simultaneously--not one at a time--so that both rates must be based on a consideration of this philosophy.* The high withdrawal rate is related to the worth of the rods and the maximum rate of reactivity addition that can be handled easily by the safety system without injuring the reactor in the classical startup accident. This high rate is achieved by running all

*This system of startup was selected so as to have all shim rods available for scramming at any time they might be required. The benefit is that the probability of not scramming because of a stuck rod is less. Furthermore, with all rods moving simultaneously, each is continuously in its most sensitive position possible at that instant. Also, slower rod speeds can be used to attain the same startup time as could be attained by having faster moving rods withdrawn one at a time.

shim-safety-rod drive motors in the withdrawal direction at full speed continuously. To guarantee that the selected maximum withdrawal rates cannot be exceeded, the drives are equipped with ac motors fed from TVA power lines. Since the frequency of TVA power is held at a fixed value. the maximum speed of the motors is also fixed. The lower rate, selected to permit orderly startups without extending the starting time excessively, is obtained by operating the motors at full speed, but for intermittent periods of approximately 1 sec on and 4 sec off. A motor-driven device is used for timing these periods.

In the power range (Run mode), group withdrawal of the shim-safety rods is prohibited; any readjustment of reactivity is effected by moving individual rods. Since the shim-safety rods are driven by manually controlled ac motors, all reactivity changes made by moving these rods occur in noticeable steps, whether group or individual repositioning is employed. When the reactor is operated in its customary fashion, i.e., in the Servo mode, precise readjustments of the shim-safety rods are not necessary, since the regulating rod has ample compensating capability; but holding the power level constant in the Manual mode is difficult. Considerable improvement is obtained by applying reduced voltage to the available individual or "preferred" shim-safety-rod drive motor, thus reducing its starting torque. Since the motor is a little slower in reaching full speed, the operator can move the rod in smaller steps. Reduced voltage switching is effected only by the manual control switch for withdrawal and insertion of the preferred; full voltage is applied during servo "preferred-rod" insertion and all reverses. In operation, the preferred function is assigned to each shim-safety rod, in turn, by the operator as needed to keep the rods uniformly withdrawn.

8.8. Special Conditions

The system includes only two features that are unusual for an ORNL reactor: the slow scram, derived from a negative ΔT across the reactor; and the inhibit, "all beam holes secured", in the "control power" path.

The second of these features is a carry-over from the original control system and is a requirement of long standing. Each beam hole of the reactor is provided with a key-lock which must be operated to permit access to the hole. These same keys, however, must be removed from the beam-hole locks and placed in key-type interlock switches in the reactor control to permit the reactor to be started or run. This arrangement guarantees that the beam holes cannot be opened unless the reactor has first been shut down, since there is only one noninterchangeable key for each beam hole and its corresponding key switch.

To understand the reason for including the negative ΔT scram, it is first necessary to consider conditions related to the shielding material between the reactor vessel and the ionization chambers. The material is sand and concrete block which, owing to gamma heating, routinely stays as much as 100°F above environmental temperatures and is normally dry. Since chamber calibration remains quite constant in routine reactor operation, the effectiveness of the shielding is not changed appreciably over a period of time. It is conceivable, however, that the shielding could be accidentally wetted (if, for example, a water leak developed in the reactor vessel), with the result that the effectiveness of the shielding would be increased considerably. For a large leak, the apparent rapid reduction in reactor power, as indicated on the nuclear power recorders, without an accompanying reduction in cooling water ΔT at the reactor would normally alert the operator. If the operator should erroneously accede to the demands of the servo system and raise the power of the reactor (the safety channels cannot disagree since they are adversely affected also), the ΔT channels will first warn and then will scram the reactor on high positive ΔT if the operator persists. Loss of cooling water from the system, detected by the level sensor in the holdup tank, may or may not be sufficient to cause any concern during this interval.

For a small leak, the change will occur slowly and the difficulty will become apparent, most probably through the gradual rise in ΔT, al-although the operator may observe that the rods require more frequent withdrawal than normal.

So far, only the effects of shielding changes in normal full-power reactor operation have been considered. There is another operating mode,

however, called Water Test, in which the reactor may be operated up to 3 N_L with the cooling-water pump turned off. In this case, cooling is by convection, the water flow through the core being opposite to that with the pump running, and the inlet and outlet temperature sensors reverse their roles. The purpose of the negative ΔT scram is to afford the same protection in the Water Test mode that the high positive ΔT scram does at other times.

The two new inlet-temperature sensors have been located rather carefully with respect to the reactor core. They must be close to the core so that they can detect abnormally high power operation reasonably promptly in the Water Test mode (reversed or convection-flow cooling), but they cannot be too close since their insulation is damaged by radiation. The location finally selected was approximately 7 ft above the core and 15 ft below the water inlet.

Originally, the inlet-water temperature sensor was located in the water pipe just upstream from the point where the pipe is coupled to the reactor vessel. Since the volume of water between the sensor and the reactor core was large compared to that between the sensor and the heat-exchanger equipment, the temperature information received from the sensor was seldom usefully related to that desired. The rate at which heat is (and was) removed from the cooling water can be adjusted only in fairly large steps by changing the air-fan speeds from fast to slow, to off, and to on again. Further, since the cooling-air temperature and humidity are subject to daily and seasonal variations, the reactor operator must make frequent changes in the fan speeds during routine operation. In the past the indicated ΔT of the reactor fluctuated widely, especially in cold weather--so widely, in fact, that the operator had to be especially attentive in adjusting fan speeds to prevent accidental tripping of the ΔT alarm. The net result was that the alarm did trip often enough when reactor conditions were entirely normal that the warning became nearly valueless as far as protection of the reactor was concerned.

An entirely different situation develops if the inlet-temperature sensor is placed near the cooling-water inlet to the core. At this depth, temperature changes cannot occur rapidly owing to the mixing which takes place in the large volume of water above. The inlet and outlet temperature sensors are now sufficiently close together in flow time to detect

slow changes of temperature at nearly the same time. Under these conditions, while the average temperature of the water through the core is still affected by changes in the cooling rate of the heat-removal system, the ΔT (for all practical purposes) varies only with reactor power. Two independent ΔT channels are included in the upgraded system, and both provide negative and positive ΔT alarms and slow scrams. The holdup volume is such that, with the installed pumping and piping system, the effect of any cold-water slug which conceivably could be generated would be handled easily by the servo system.

8.9. Layout

Figure 8.9.1 shows the general arrangement of the reactor control and instrument panels in the control room at the LITR site. No console is provided for local operation because only startups and tests will be conducted from the control room. All operation, once the reactor has been started, is handled from a remote console located in the ORR control room. Figure 8.9.2 shows the detailed arrangement of the local console.

Relay and motor-starter cabinets as well as the "clean" and "raw" power distribution panels are located behind the operating panels. "Clean" power is defined as that which is supplied by a distribution transformer to which no intermittent or electrical noise-generating loads such as relays, electric drills, and the like are connected. Such an arrangement to supply power to the nuclear instrumentation systems has been found to be helpful in reducing the amount of electrical noise picked up by these systems. "Raw" power is, of course, that which is supplied for use by all other types of loads. Main disconnects for both distribution panels are located on the north wall of the control room outside the control enclosure for easy accessibility.

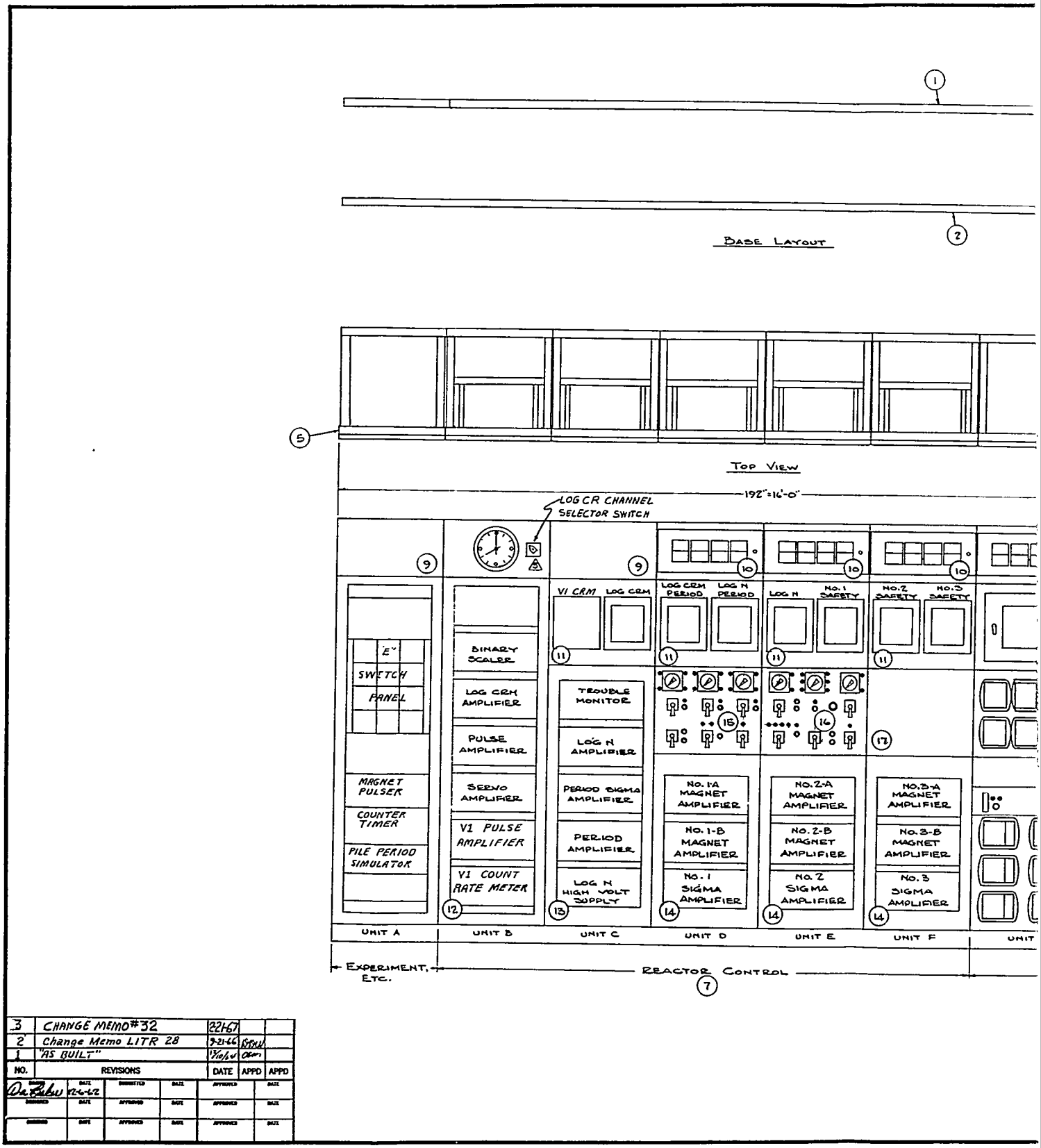

NO.	REVISIONS	DATE	APPD	APPD
3	CHANGE MEMO #32	2-21-67		
2	Change Memo LITR 28	9-21-66		
1	"AS BUILT"	1/10/64		

Fig. 8.9.1. LITR Control Par

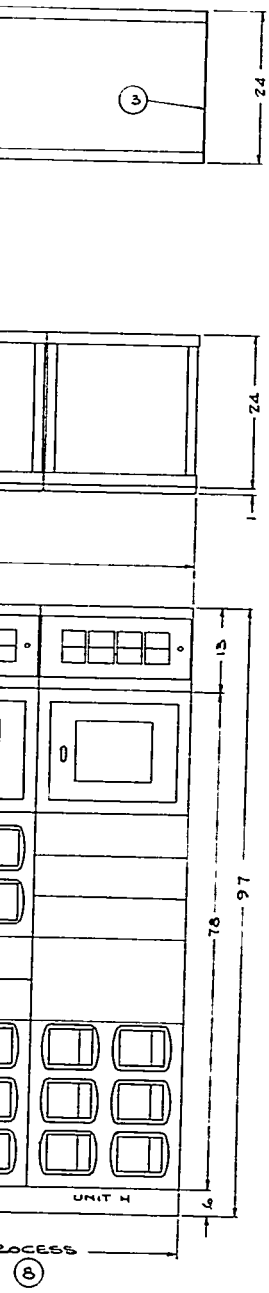

LIST OF MATERIALS

1. 14 FT. x 6 IN. STANDARD CHANNEL BASE PER DWG. Q-1700-23. ALTER ONE END TO AVOID INTERFERENCE WITH EXISTING BASE OF UNIT 1.
2. 16 FT. x 6 IN. STANDARD CHANNEL BASE PER DWG. Q-1700-23. DRILL FOR ITEM 4.
3. STANDARD 6 IN. x 24 TIE PLATE PER DWG. Q-1700-23
7. REACTOR CONTROL BOARD
   UNIT B PER DWG. RC12-4-2A
   UNITS C, D, E, F PER DWG. RC12-4-2B
8. PROCESS INSTRUMENT BOARD PER DWG. Q-2219-5, 4A, 4B & 4C
9. PANEL, 13 x 24 PER DWG. Q-1378-2
10. PANEL, 13 x 24 PER DWG Q-1378-2.
11. PANEL, 19½ x 24 PER DWG. Q-1378-2, CUTOUTS PER DWG Q-1378-56
12. PANEL, 78 x 24 PER DWG. Q-1378-2, CUTOUT AND MT'G. STRIP PER DWG. Q-1378-27.
13. PANEL, 58½ x 24 (SPECIAL)
14. PANEL, 39 x 24 (SPECIAL)
15. 16. PANEL, 19½ x 24 PER DWG. Q-1378-2, CUTOUTS PER DWG. RC12-4-2C
17. PANEL, 19½ x 24 PER DWG. Q-1378-2

LITR Control & Instrumentation Dwg (List)	RC12-0-1
REFERENCE DRAWINGS	DWG. NO.
DESIGN RESPONSIBILITY P. RUBEL	
L.I.T.R.	3005
CONTROL PANEL ASS'Y.	
INSTRUMENTATION AND CONTROLS DIVISION OAK RIDGE NATIONAL LABORATORY OPERATED BY UNION CARBIDE NUCLEAR COMPANY	
SUBMITTED P. Rubel 8/19/63 · ACCEPTED H.V. Klaus 8/20/63 · APPROVED P. Rubel 8/20/63	
	RC12-4-1A R3

LIMITS ON DIMENSIONS UNLESS OTHERWISE SPECIFIED
FRACTIONS: ±
DECIMALS: ±
ANGLES: ±
SCALE:

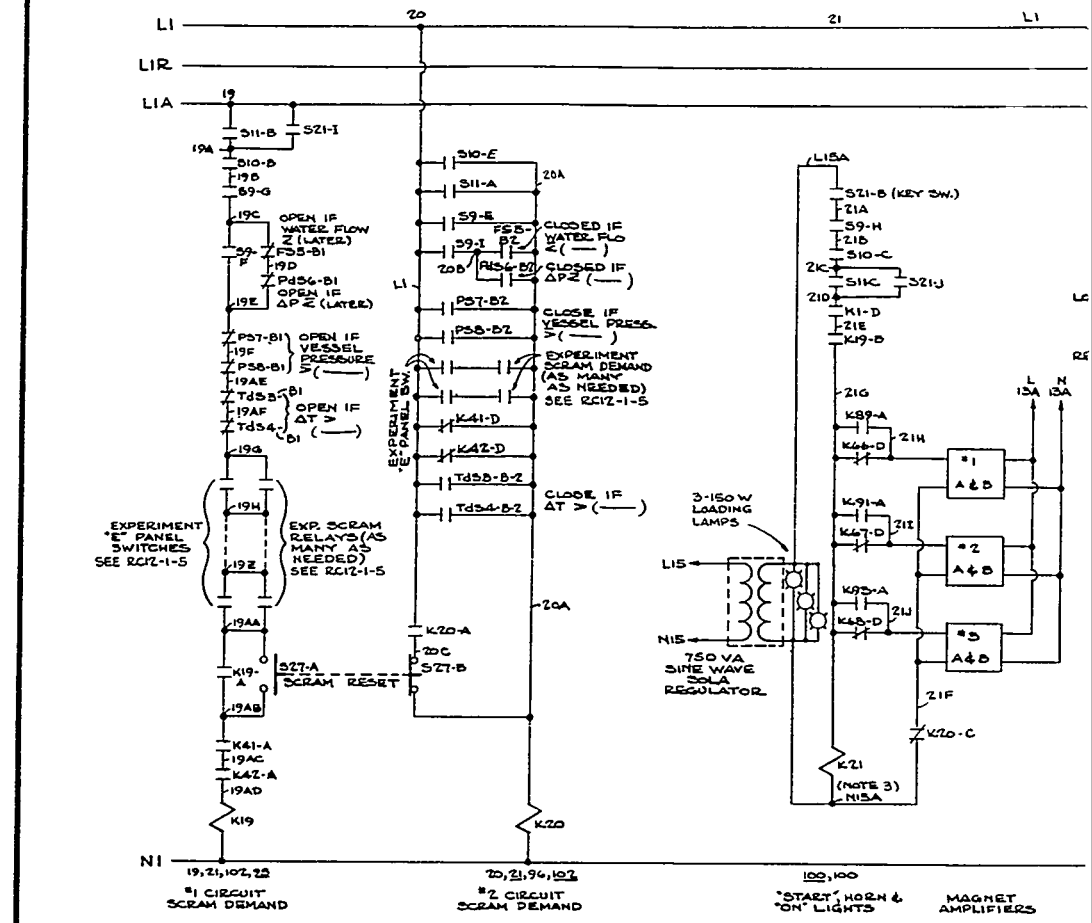

SWITCHES

S1	WITHDRAW SPEED SELECTOR	S29	REMOTE ANNUNCIATOR
S2	REVERSE BY-PASS	S30	REMOTE ANNUNCIATOR
S3	LOCAL PREFERRED ROD POSITION	S31	
S4	REMOTE PREFERRED ROD POSITION	S32	SERVO "STOP" PUSHBU
S5	FISSION CHAMBER POSITION		
S6	#1 ROD MODE SWITCH		
S7	#2 ROD MODE SWITCH		
S8	#3 ROD MODE SWITCH		
S9	RAISE-TEST SWITCH		
S10	LOCAL SCRAM SWITCH		
S11	REMOTE SCRAM SWITCH		
S12	LOCAL SERVO DEMAND		
S13	LOCAL ANNUNCIATOR ACKNOWLEGE		
S14	LOCAL ANNUNCIATOR RESET		
S15	LOCAL #1 ROD SELECTOR		
S16	REMOTE #1 ROD SELECTOR		
S17	LOCAL #2 ROD SELECTOR		
S18	REMOTE #2 ROD SELECTOR		
S19	LOCAL #3 ROD SELECTOR		
S20	REMOTE #3 ROD SELECTOR		
S21	KEY POWER SWITCH		
S22	SERVO "START" PUSHBUTTON		
S23			
S24	"RUN" PUSHBUTTON		
S25			
S26	REMOTE "REVERSE" PUSHBUTTON		
S27	A&B SCRAM "RESET" PUSHBUTTON		
S28			

NO.	REVISIONS	DATE	APPD	APPD
5	AS BUILT	9-23-63		
4	RELAYS 43 & 44 ADDED	1-15-68	RWL	
3	Changed Relay Cont. No's to "as built"	10-10-63	RJB	
2	RELOCATE K20-D	10-4-63	PK	
1	CORRECTED SIZE OF L15 SOLA ADDED Td53 CONTACT DESIGNATIONS	9-23-63	PK	

DRAWN D. A. Schw DATE 5-29-63
DESIGNED DATE
CHECKED D. J. Dugin DATE 8-21-63
SUBMITTED DATE APPROVED DATE
APPROVED DATE APPROVED DATE

Fig. 8.9.2. Deta

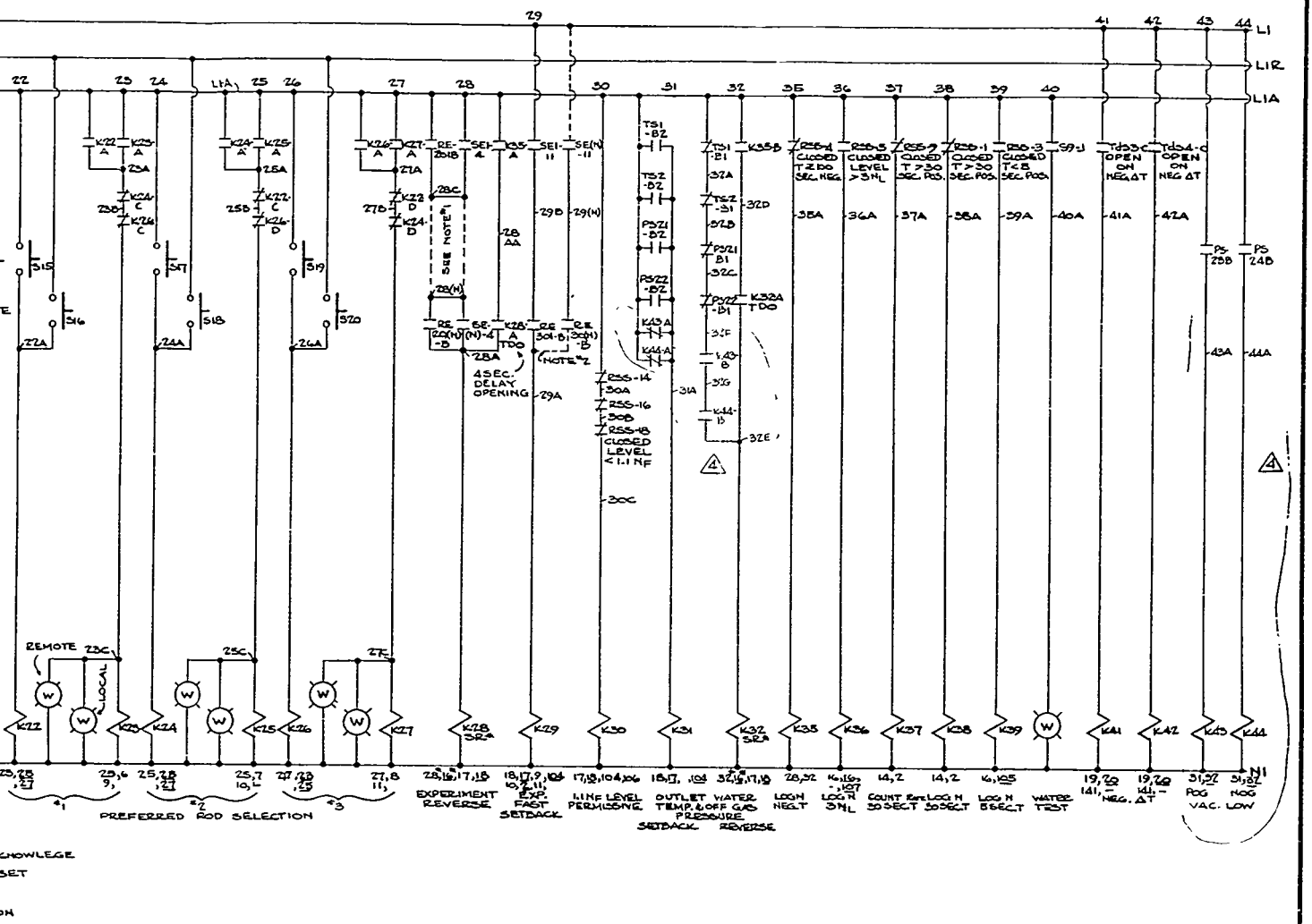

NOTES

1. THESE SERIES CIRCUITS ARE PROVIDED ONE FOR EACH EXPERIMENT AS NEEDED. SEE RC12-1-5
2. THESE PARALLEL CIRCUITS ARE PROVIDED ONE FOR EACH EXPERIMENT AS NEEDED. ONE PARALLEL AND ONE SERIES PAIR CONSTITUTE A DOUBLE TRACK ARRANGEMENT. SEE DWG. RC12-4-3A & RC12-1-5
3. K21 HAS ONE N.C. DELAYED OPENING AND ONE N.O. INSTANT CONTACT.

L.I.T.R CONTROL & INST. DWG'S (LIST)	RC12-0-1
REFERENCE DRAWINGS	DWG. NO.
DESIGN RESPONSIBILITY P. RUBEL	
L.I.T.R.	
L.I.T.R. ELEMENTARY DIAGRAM OF CONTROL SHEET #2	
INSTRUMENTATION AND CONTROLS DIVISION OAK RIDGE NATIONAL LABORATORY OPERATED BY UNION CARBIDE NUCLEAR COMPANY	
SUBMITTED P. Rubel / ACCEPTED H. V. Chase / DATE 5/6/63 / APPROVED P. Rubel / DATE 8/6/63	
	RC12-1-4B 25

ed Arrangement of the LITR Local Controls

8.10. Startup and Run

Normally, the LITR is started manually and operated under servo control in the power range, although it may be operated manually in this range also if desired. The automatic start feature, while being used successfully in other ORNL reactors, was judged not to have sufficient value in this case to justify the additional control complications which it necessitates.

To begin a description of the operation, it will be assumed that a normal startup sequence is contemplated, which means that the reactor will be started and brought to approximately 1% of full power (N_L) manually and then the reactor will be transferred to servo control to continue to full power (N_F). It will be assumed further that the ac power has been turned to On with the key switch, instrument channels are functioning normally, rod-mode selectors are set to Normal, and all annunciators and scrams have been cleared. The first operation is to start the servo; this is accomplished by pressing the servo Start button. One restriction is placed on starting the servo, however; the regulating rod must be "cocked" (withdrawn more than 15 in. of a possible ~17-in. stroke, either by hand or by motor). This is the safest and most useful position in which to place the regulating rod during startup, since it cannot, through equipment or other failure, contribute inadvertently to the generation of short, positive periods; and, at the same time, it is in the best position to take control of the reactor when it reaches N_L. If the regulating rod is not cocked, the operator has two choices: he may walk up to the reactor top plug and turn the servo motor shaft by hand, or he may turn the "Raise-Test" switch to the Raise position. The latter action starts the servo regardless of the position of the regulating rod, but it also produces a slow scram. This is done intentionally so that the "Raise-Test" switch would not be misused to transfer the control from manual to servo while the reactor is operating. The regulating rod will be withdrawn fully just as soon as the servo starts, since the power level is below the demand setpoint, after which the "Raise-Test" switch may be returned to its Normal position and the slow scram cleared.

The operator has now gained permission to withdraw the shim-safety rods and proceeds to do so by turning the "Speed Selector" switch to Intermittent. Full speed is not available until log-N confidence has been established (which includes the reactor power being above 10^{-5} N_F). Withdrawal of the shim-safety rods will continue, first at a uniform intermittent rate and then with occasional interruptions caused by the generation of transient 30-sec positive periods in the reactor, as determined by the counting channel. Withdrawal will continue in shorter and shorter increments until a stable 30-sec period is reached, when further rod motion is prohibited. The operator may elect to override the 30-sec period limitation by use of the "Reverse-Bypass" switch, but in no case will withdrawal be permitted if the period becomes shorter than 15 sec. The "Reverse-Bypass" switch is so named in order to describe its dual purpose. Not only is it used as a circuit by-pass as is described here, but it is also the switch which is used to manually drive all shim rods into the reactor. The switch is spring loaded to the center, Normal, position. Moving the handle clockwise places the switch in the By-pass position. To reverse all shim rods, the switch is rotated counterclockwise. The reason for using a single switch handle for two functions is that if trouble should develop while the by-pass is in effect, the operator already is grasping the switch handle he needs to use to immediately reduce reactivity--he only needs to turn the same switch in the opposite direction. This precludes his having to reach for a second switch handle. Use of the "Reverse-Bypass" switch requires continuous attention by the operator, since it is spring returned from the By-pass to the Normal position. Withdrawal is blocked, of course, if the counting channel goes out of range or if the fission chamber is being moved unless log-N confidence has been established. This blocking prevents the addition of reactivity to the core when the reactor power is below the range of the log-N channel and while the information from the counting channel is irrelevant.

Once log-N confidence has been established, Full shim-safety-rod withdrawal speed becomes available. This speed is provided principally to permit rapid restarting of the reactor when xenon poisoning threatens

and, for this purpose, is used in conjunction with the "Reverse-Bypass" switch to prevent interference from the 30-sec period inhibits. Both the "Speed" and "By-pass" switches must be held in their required positions by the operator to help ensure that their use is by intent--not by accident.

In the process of bringing the reactor power to N_L, the operator must keep a check on the positions of the three shim-safety rods. It is intended that all rods be withdrawn uniformly; but, since alternating-current squirrel-cage motors are used to power the rod drives, such even withdrawal seldom occurs. The difficulty is that the friction in the three drives is different for each; and, since the motor speed is related to its load, the rods move different distances in the same time interval. The operator, then, may find it necessary to take measures to realign the three rods during startup; this is done by temporarily stopping the fastest rod by turning its "Mode" switch to the Block position. As soon as withdrawal alignment is re-established, the rod "Mode" switch is returned to its Normal position.

Once the 30-sec period in the normal startup has been established, the operator has only to keep abreast of the action until after the servo assumes control at N_L. The operator then turns the "Speed-Selector" switch to Hold, presses the "Run" button; and, if the servo is actually controlling at N_L, the mode will change: (1) group withdrawal is no longer permitted (its use now could only contribute to disorderly operation), and (2) the 30-sec positive period limitations are by-passed to avoid possible and unnecessary interference.

Having achieved the run condition, the operator may raise the power according to plan; and, unless prevented by experiment or water-system trouble, he does this by turning the "Servo Demand" control to the Fast Raise position. To help prevent unintentional changes in power demands, the control switch provided is of the spring-return type, which must be held in the proper position until the desired demand setting has been obtained. Just as soon as the demand is raised above N_L, the servo system acts to withdraw the regulating rod; the reactor power then rises to the selected level and is held there by further action of the servo system. The servo demand-setting mechanism itself is capable of making

changes only in steps of about 200 kw each; but a separate, continuously adjustable vernier control permits intermediate demand settings to be selected, if desired. If the regulating rod does not settle at approximately the middle of its stroke, the operator will move it there by adjusting the position of the preferred shim-safety rod, using the "Preferred-Rod" control switch. As fuel is burned and xenon is formed, it will be necessary to withdraw rods to compensate as required; therefore, the operator from time to time should select a different rod as the preferred one to maintain withdrawal alignment.

Automatic withdrawal of one or more shim-safety rods by the servo system is not permitted because a servo failure could place the reactor on a short positive period, an undesirable situation expecially if it occurs at low power levels. Rather, the operator is assigned the task of keeping the regulating rod operating near the middle of its range; but, if he forgets, the regulating rod will, when withdrawn to its upper limit, trip an annunciator by means of a position switch, thus calling the situation to the attention of the operator. If the operator still fails to take corrective action, nothing more serious results than a gradual decrease in the reactor power. Regulating-rod position is recorded for administrative reasons.

Every effort was made in designing the control system to minimize the use of scrams for protecting the reactor but without sacrificing safety. Consider the case in which the servo fails while controlling the reactor and the regulating rod is withdrawn to its limit. This trips the shim-request annunciator, telling the operator that the regulating rod is out of range; if he corrects without first checking the power level, he simply contributes to the difficulty by withdrawing the preferred rod. Rather than having the instruments scram the reactor in this case, the operator is warned when the power level reaches 1.1 N_F to permit him to take corrective action. If he still persists in misinterpreting the situation, an instrument reverse will be initiated by one or more safety channels at 1.2 N_F. The reverse reduces the power to 1.2 N_F or below and continues to limit it to that value. These two backups are equally effective when the operator is controlling the power manually.

The regulating rod, on the other hand, is assigned the function of inserting the preferred rod should the need arise; and this is backed by a reverse if the rate of correction afforded by the preferred rod is insufficient. Such an arrangement reduces the possibility that safety action will be needed if, for example, the neutron absorption of an experiment were to fall off more than could be compensated for by the servo rod. Once the insertion of the preferred rod is initiated by the action of the servo, insertion continues until sufficient absorber has been added to cause the regulating rod to withdraw to the middle of its stroke. Insertion of the preferred rod is indicated by pilot lights, but the operator is required to take no action.

The reactor may be shut down in a number of ways, such as by means of the manual "Scram" or by the "Reverse" switch. The operating mode changes from Run back to Start when the power level, as detected by the log-N channel, drops below 0.1 N_L. The servo may be turned off with its own pushbutton or by turning off the key switch. In any case, the operator, in anticipation of a restart, will want to see that the regulating rod is cocked before shutting the servo off. The servo demand is automatically run back to N_L when the reactor controls are taken out of the Run mode.

8.11. Annunciators

The annunciator system monitors the reactor through various instrument channels, direct sensors, and electrical interlocks; warns the operator both visibly and audibly that abnormal conditions exist or are imminent; and, finally, remembers the sources of the signals which trip it. The system makes use of an individual, two-color, visible alarm assembly for each item being monitored and one common horn signal. The former remains active until the trouble is cleared, while the latter may be silenced by the operator through the use of the "Acknowledge" pushbutton provided. The sequence of action is as follows:

1. When trouble develops, an audible signal is initiated and two lights are turned on.

2. The operator acknowledges the trouble by pressing the "Acknowledge" button, silencing the audible signal and turning off one light.
3. When the trouble is cleared, the active light goes out and the other, the "Memory" light, turns back on.
4. The operator turns off the memory light by pressing the "Reset" button.
5. Once the audible alarm is silenced, any new trouble will set it off again, as will the first trouble if it recurs even though the channel has not been reset.

Alarms are repeated at the remote station, and these are tripped by the action of the local alarms. Through the use of the control-power switch, the remote "Acknowledge" and "Reset" pushbuttons are prevented from controlling the local alarms if the switch is in its "On" position. Also, under this condition, the remote alarm system is disconnected. This prevents the sending of unnecessary signals to the remote control panel which would not be manned for LITR operation if local control were in effect. Of course, when the control-power switch is in its Remote position, full control of the annunciator system is possible in either control room.

The alarms are:
(a) Fast scram
(b) Slow scram
(c) Reverse
(d) Automatic "setback"
(e) 5-sec reactor period
(f) Power level above 1.1 N_F
(g) Power level at or above 3 N_L in "start"
(h) Regulating rod in upper limit (Shim Request)
(i) Safety trouble
(j) Loss of recorder power
(k) Experiment trouble
(l) ΔT high or negative
(m) Exit temperature high
(n) Flow low (reactor coolant)

(o) Reactor-vessel pressure high

(p) Holdup tank level too high or too low

(q) Vacuum low in normal off-gas system

(r) Vacuum low in pressurizable off-gas system

(s) By-pass water temperature too low

8.12. Auxiliary Features

The rod-mode selector is also used in connection with two auxiliary control functions, "Raise Clutch" and "Automatic Rundown". The raise-clutch feature is provided to permit moving the shim-safety rod drives in the withdraw direction without withdrawing the rods and thus is useful for adjusting and checking the drives themselves. It must not be capable of misoperation, however, since rod withdrawal might occur inadvertently. In the LITR, the control system is first placed in the Raise-Clutch mode by positioning the "Raise-Test" control switch; as stated earlier, this decouples the shim-safety rods from their drives by cutting off the alternating current source supplying power to the magnet amplifiers thus de-energizing the rod magnets. If the rod-mode selector is now turned to the Raise position, the associated rod drive will run in the withdraw direction. There is one important additional safety requirement imposed, however; the shim-safety rod must stay seated (fully inserted) or the withdraw motion is promptly blocked. This is accomplished by interlocking the "raise" circuitry with the rod seat switch, permitting operation only as long as the shim-safety rod remains seated in the core.

Motion of the rod drive may be stopped anywhere in its range by turning the rod mode selector to Off. To insert the drive, the mode selector is turned to either the Block, Normal, or Lower position. The Block position is next to the Off position and is most convenient to use.

Automatic run-down of the rod drive occurs whenever a shim-safety rod and its drive become uncoupled, provided its rod-mode selector is set to the Block or Normal position. The purpose is to relieve the operator of having to use the manual controls to reinsert a drive after a scram or after a rod falls off for some reason during operation. This is

a safe operation, and failures in the circuitry may only cause the reactor to shut down, at worst. The run-down can be prevented, if the need should ever arise, by turning the rod mode selector to Off.

Refueling the reactor core is always done with great caution. Since the shim-safety rods are already seated, further corrective action may be quite difficult to take should a large reactivity change occur. In order to keep the operators aware of even small changes in reactivity, counting-rate information is brought directly to the loading station. With this arrangement, the loading crew will be warned immediately if the counting rate changes at an unexpected rate while the fuel is being installed; and corrective action (removing fuel) can be taken promptly. The system used at the LITR is quite simple, consisting of an amplifier and a loud speaker; the former picks up the pulses from the counting channel electronics and amplifies them sufficiently to drive the loud speaker, which is located near the reactor top well within earshot of the loading crew. Also, information that the control rods are seated is displayed near the reactor top plug as well as on the control panel. Knowledge that the rods are seated when they are supposed to be seated is considered important enough that the circuitry is automatically supplied with emergency power when power from the commercial source is lost.

8.13. Remote Control

8.13.1. General

Remote control of the LITR was transferred to the ORR from the OGR control room when the latter reactor was taken out of service in 1963. A new console was provided principally because the physical size of the old one was such that it could not be fitted into the ORR control room without first undertaking a rather expensive rearrangement of the existing ORR control installation. The instrumentation for the new, smaller console was updated to provide the operator with more accurate instrument-channel information through a more serviceable isolation and re-transmission system. Part of the reduction in size was made possible by the elimination of some features of the original console that were found by experience to be totally unnecessary, but the principal space saving was

effected through the use of smaller components such as indicating instruments, pilot lights, and switches, and by substituting small two-pen recorders for large single-pen models.

8.13.2. Criteria

The LITR is started and brought up to operating power only from its main or "local" control station.

For operating convenience, the vernier servo demand set is provided with means for adjusting it from the remote console as well as from the local control station.

The reactor operators inspect the LITR main control station and its instruments at least once per shift.

The temperature in the LITR control room is monitored and the remote operator warned if the temperature rises above normal.

Circuits for the remote nuclear and process instrumentation for safety and control are completely isolated from the local or primary circuits so that no conceivable malfunctioning of, or damage, or inadvertent changes to, the remote system and/or its cabling could interfere with the normal functioning of the primary circuits. Automatic control functions are assigned only to the local instrumentation.

The LITR control room is kept locked and keys are made available only to those who can establish a need for them.

Means are provided for disconnecting the remote from the local controls to facilitate checkouts and startups, as well as to permit local operation without interference from the remote console.

8.13.3. Description of Installation

Console. - The LITR remote control console is located alongide the ORR control console (Fig. 8.13.1). The two panels are divided roughly into control and readout functions. The various controls, indicators, and recorders may be identified by referring to Figs. 8.13.2 and 8.13.3.

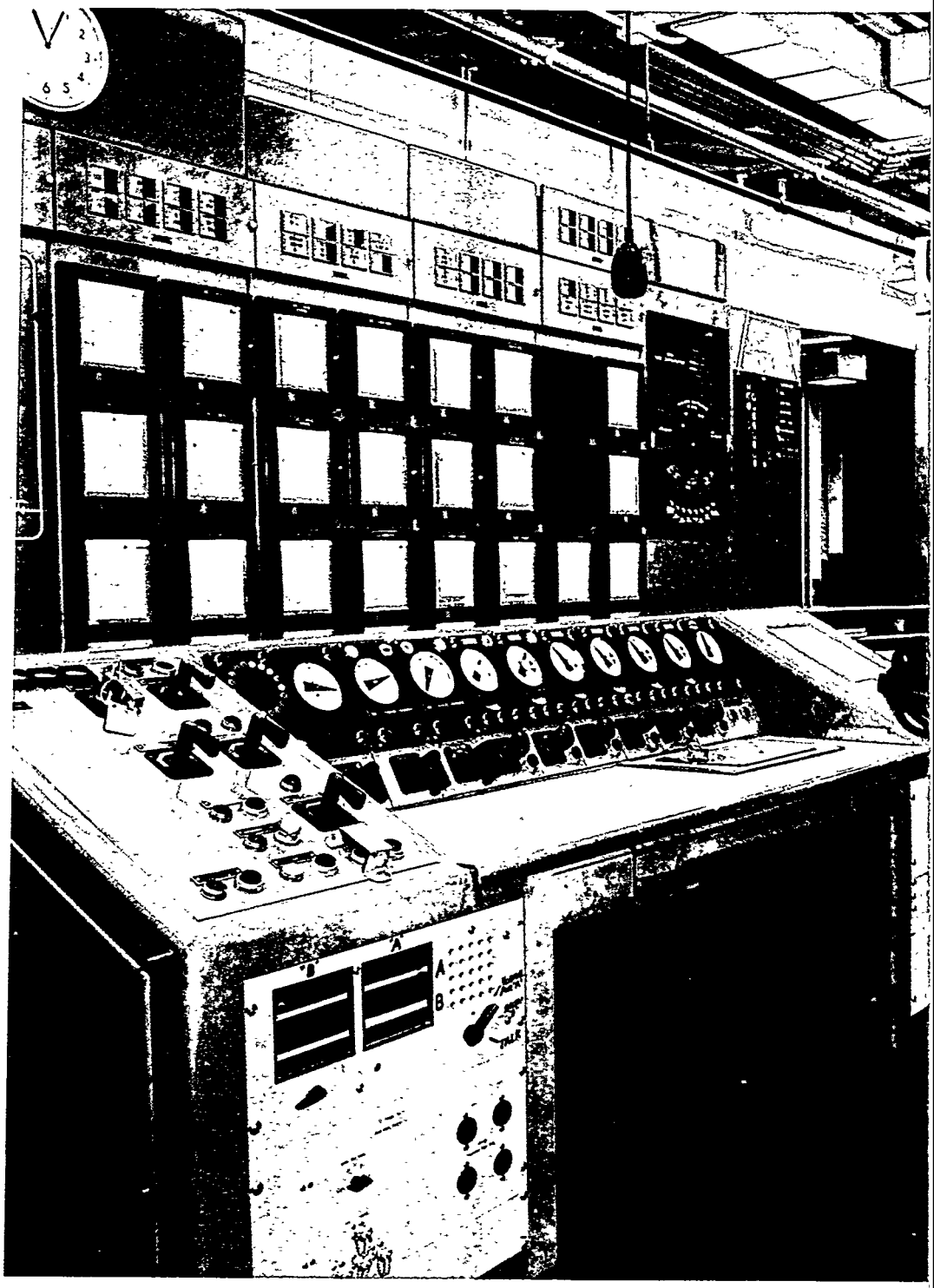

Fig. 8.13.1. Control Room for Re

te LITR Operation

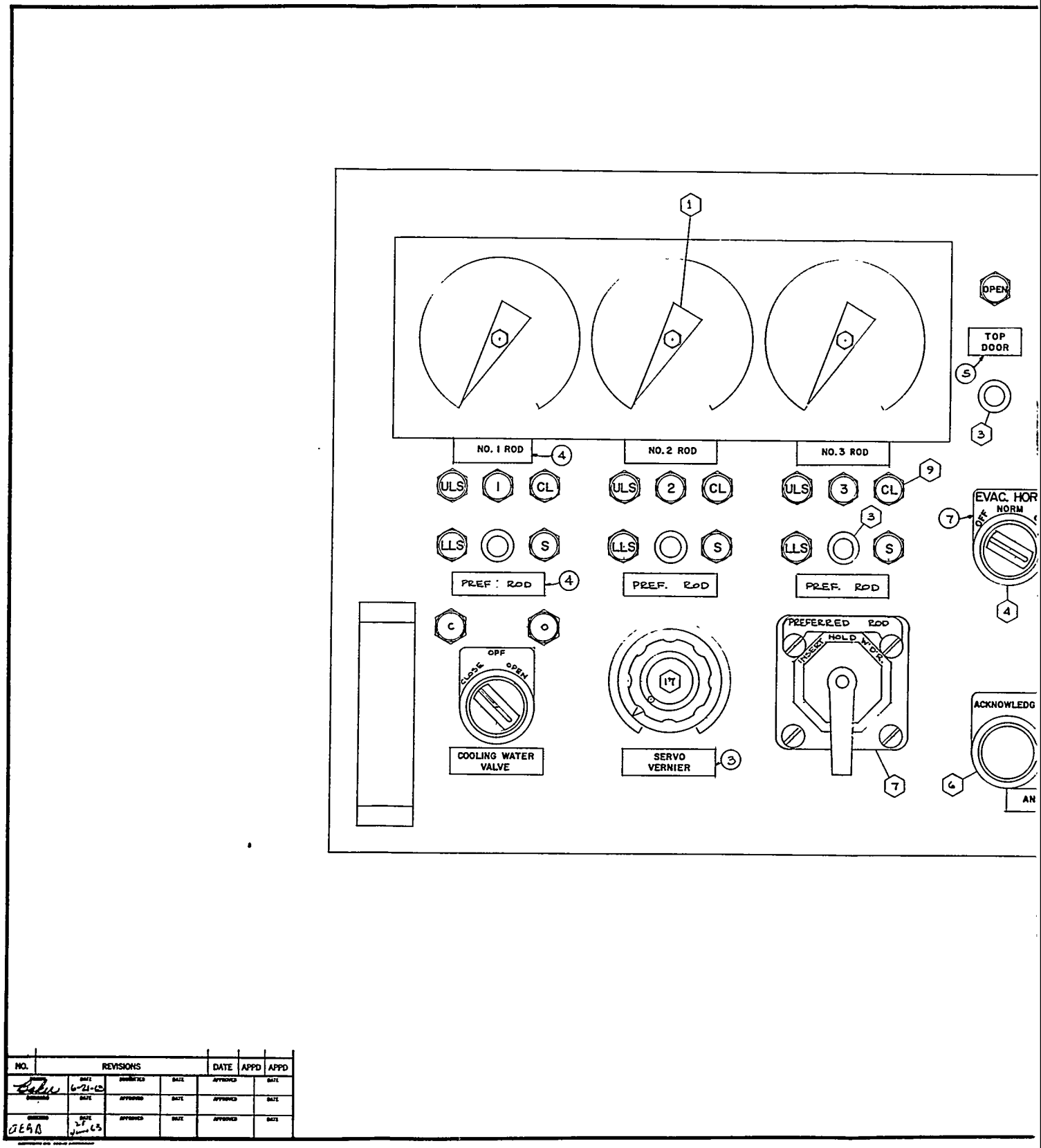

Fig. 8.13.2. Section 1, LITR Remot

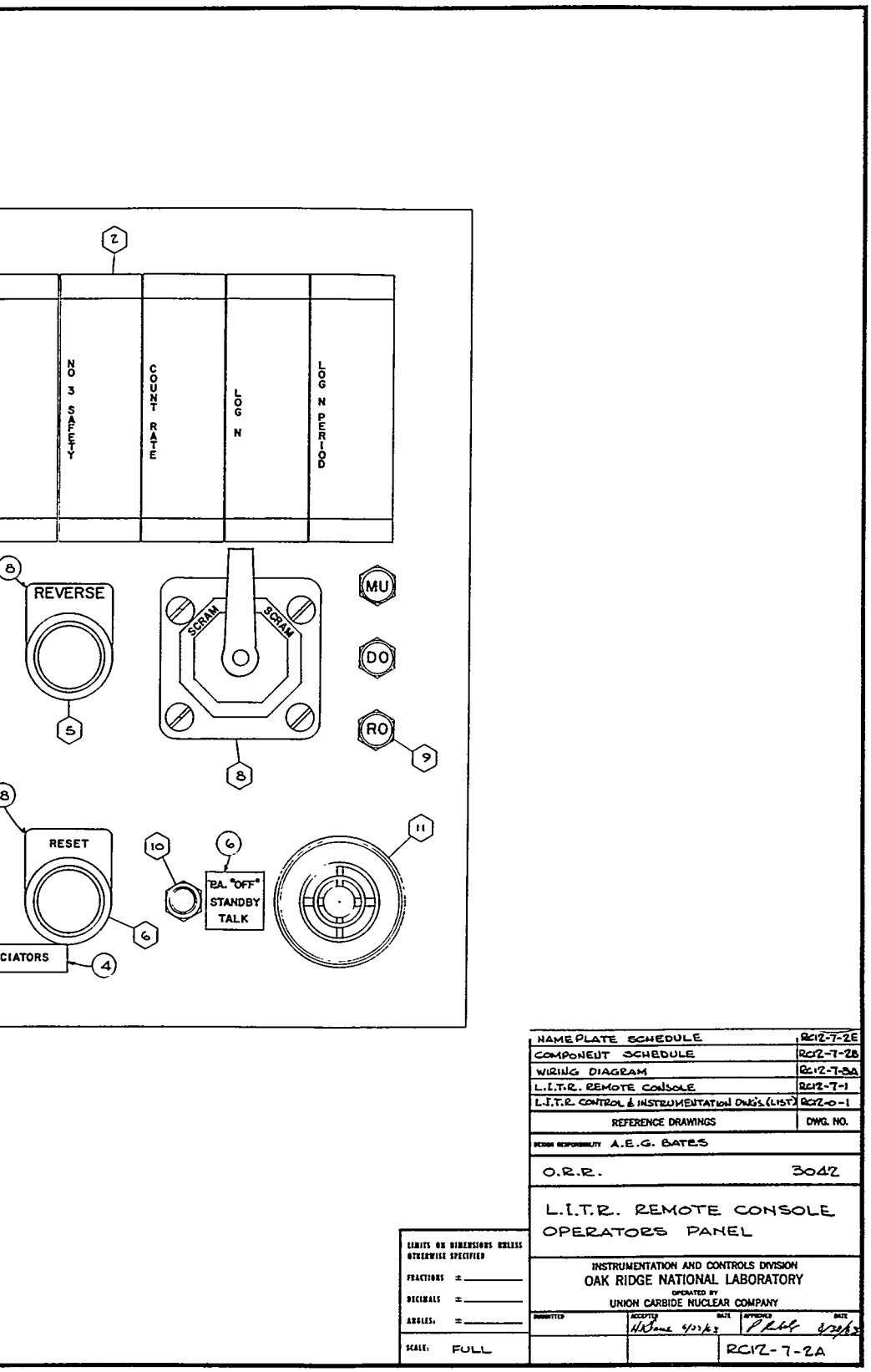
2
NO 3 SAFETY
COUNT RATE
LOG N
LOG N PERIOD
8
REVERSE
5
SCRAM
SCRAM
8
MU
DO
RO
9
8
RESET
6
10
6
PA. "OFF"
STANDBY
TALK
11
CIATORS
4
NAMEPLATE SCHEDULE RC12-7-2E
COMPONENT SCHEDULE RC12-7-2B
WIRING DIAGRAM RC12-7-3A
L.I.T.R. REMOTE CONSOLE RC12-7-1
L.I.T.R. CONTROL & INSTRUMENTATION DWG'S (LIST) RC12-0-1
REFERENCE DRAWINGS
DWG. NO.
DESIGN RESPONSIBILITY A.E.G. BATES
O.R.R. 3042
L.I.T.R. REMOTE CONSOLE
OPERATORS PANEL
LIMITS ON DIMENSIONS UNLESS OTHERWISE SPECIFIED
FRACTIONS ±
DECIMALS ±
ANGLES: ±
SCALE: FULL
INSTRUMENTATION AND CONTROLS DIVISION
OAK RIDGE NATIONAL LABORATORY
OPERATED BY
UNION CARBIDE NUCLEAR COMPANY
SUBMITTED
ACCEPTED
DATE
APPROVED
DATE
RC12-7-2A

Console

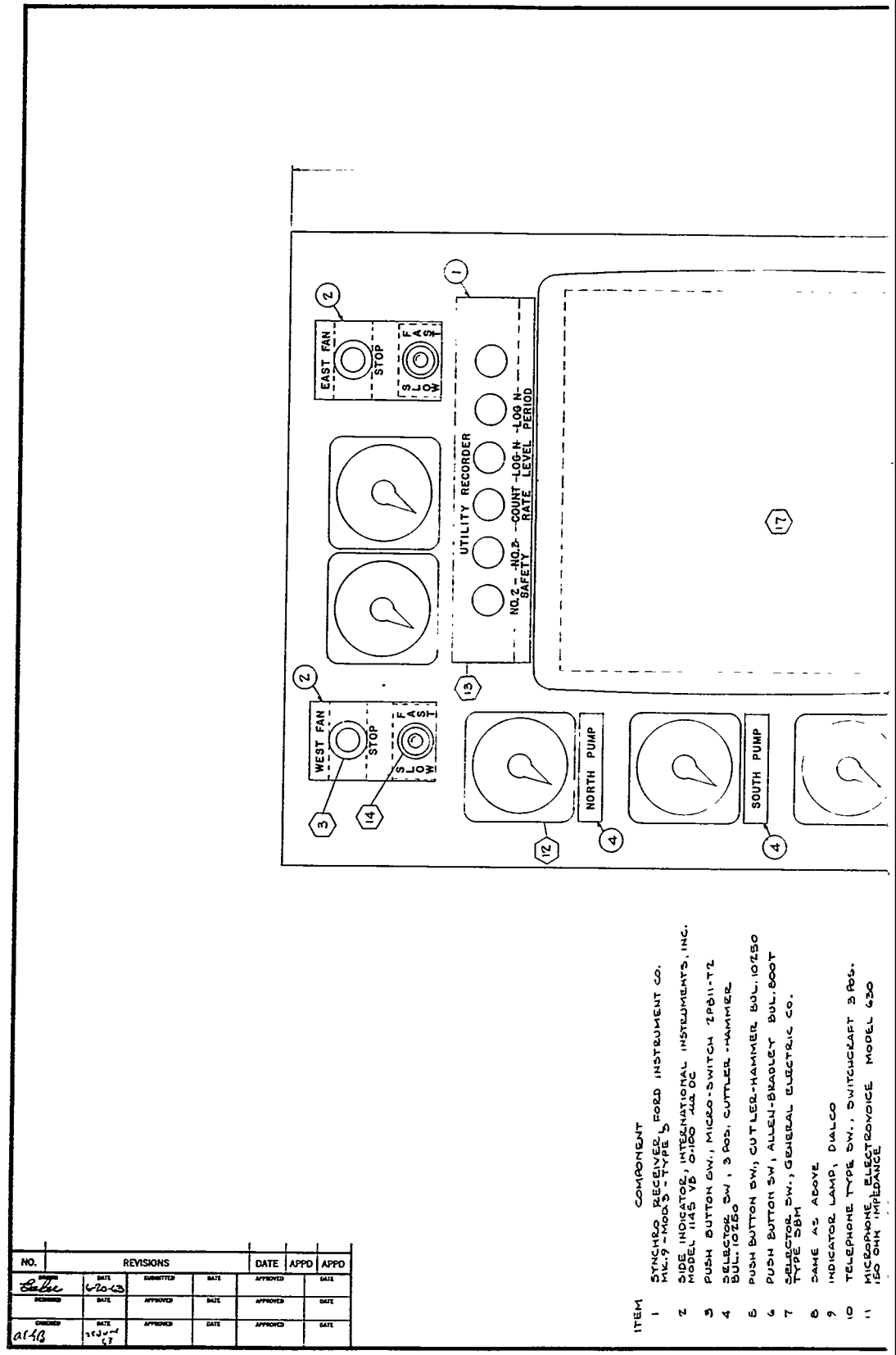
EAST FAN
STOP
SLOW
FAST
WEST FAN
STOP
SLOW
FAST
UTILITY RECORDER
NO.2 - NO.3 - COUNT - LOG N - LOG N -
SAFETY RATE LEVEL PERIOD
NORTH PUMP
SOUTH PUMP
1
2
3
4
12
13
14
17
ITEM COMPONENT
1 SYNCHRO RECEIVER, FORD INSTRUMENT CO. MK.9-MOD.3-TYPE 5
2 SIDE INDICATOR, INTERNATIONAL INSTRUMENTS, INC. MODEL 1145 VB 0-100 μa DC
3 PUSH BUTTON SW., MICRO-SWITCH 2PB11-T2
4 SELECTOR SW, 3 POS. CUTTLER-HAMMER BUL. 10250
5 PUSH BUTTON SW., CUTLER-HAMMER BUL. 10250
6 PUSH BUTTON SW, ALLEN-BRADLEY BUL. 800T
7 SELECTOR SW., GENERAL ELECTRIC CO. TYPE 5BM
8 SAME AS ABOVE
9 INDICATOR LAMP, DIALCO
10 TELEPHONE TYPE SW., SWITCHCRAFT 3 POS.
11 MICROPHONE, ELECTROVOICE MODEL 630 150 OHM IMPEDANCE
NO.
REVISIONS
DATE
APPD
APPD
6-20-63
DATE
APPROVED
DATE
APPROVED
DATE
APPROVED
DATE
APPROVED
DATE
APPROVED
DATE

Fig. 8.1

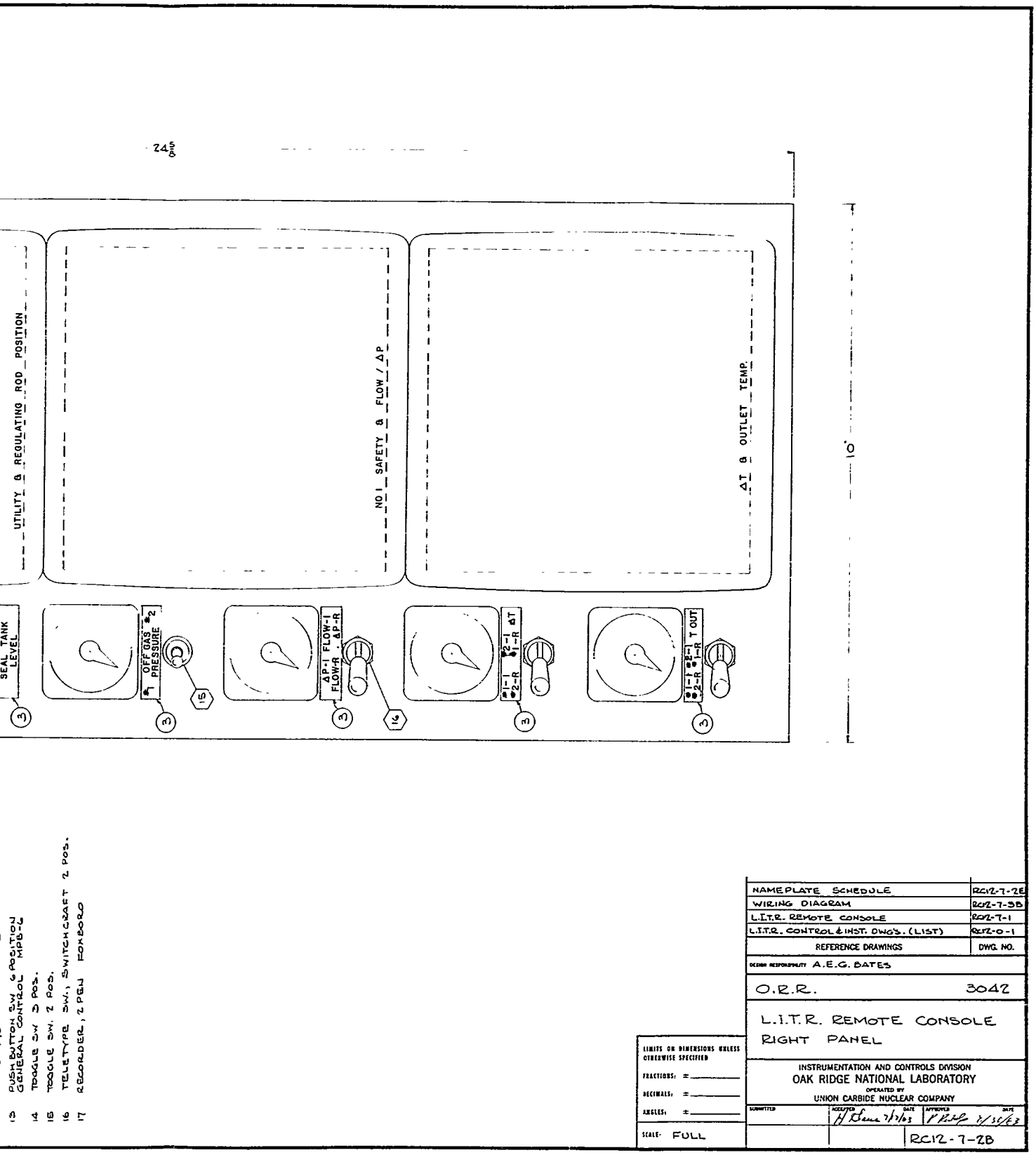

3. Section 2, LITR Remote Console

Control Capabilities. - Means are provided at the remote console to:

1. Scram the reactor,
2. Initiate a reverse,
3. Insert and withdraw the preferred shim-safety rod,
4. Select the preferred rod,
5. Make minor adjustments in the power demand setting,
6. Release the top-area door latch,
7. Sound the evacuation horn for the LITR building,
8. Acknowledge and reset annunciators, local and remote.
9. Start, stop, and select fan speeds of fluid coolers,
10. Select variables to be recorded and indicated, and
11. Page and communicate with working areas in the LITR building.

Readout and Recording Capabilities. - To aid the operator, the following information is displayed continuously on indicators in the remote console:

1. Position of each shim-safety rod,
2. Log-N period,
3. Log-N reading,
4. Counting rate,
5. The three power-level safety channel readings,
6. East and west fan-motor currents,
7. North and south pump-motor currents,
8. Seal tank level,
9. Vacuum of normal and pressurizable off-gas systems,
10. Regulating-rod position,
11. Reactor core ΔP,
12. Cooling-water flow,
13. Reactor ΔT's (two measurements), and
14. Reactor outlet T's (two measurements).

In a number of cases, it is found useful for the operator to be able to record the magnitude of changes of certain parameters, either continuously or for varying periods of time, on selection; three two-pen recorders and associated switching means are provided in the console for this purpose. Allocation of recorders is as follows:

1. Continuously recorded are regulating-rod position and power level according to the No. 1 safety channel,
2. Recorded as desired are the level per No. 2 or No. 3 safety channel, or the log-N, or counting-rate channels, or log-N period,
3. One or the other ΔT across the core,
4. One or the other outlet water temperature,
5. Either cooling-water flow or core ΔP.

Pilot Lights. - Other operating information is provided by a number of pilot lights:

1. For each shim rod:
   a. Rod drive fully withdrawn.
   b. Rod drive fully inserted.
   c. Rod clutched.
   d. Rod in seat.
   e. Rod selected as "preferred".
2. For the scram circuits:
   a. Make-up circuit operated.
   b. Drop-out circuit operated.
3. Top door not closed (entrance to room at reactor top).
4. Control in Remote Operation mode.

Alarms. - The following LITR annunciators are installed in the ORR control room:

1. Fast scram.
2. Slow scram.
3. Reverse.
4. Automatic setback.
5. Five-sec period.
6. Power level $>1.1\ N_F$.
7. Power level $\geq 3\ N_I$ and not in Run.
8. Regulating rod in its withdraw limit (Shim Request).
9. Safety trouble.
10. Two safety channels out of service.
11. Recorder power off.

12. LITR control-room temperature too high.
13. Evacuation horn requested.
14. Experiment trouble.
15. Reactor core ΔT high or negative.
16. Outlet cooling-water temperature high.
17. Cooling-water flow low.
18. Reactor-vessel pressure high.
19. Holdup tank level high or low.
20. Normal off-gas system vacuum too low.
21. Pressurizable off-gas system vacuum too low.
22. By-pass water temperature too low.

Remote Data Transmission System. - Nuclear channel information is taken from auxiliary slide wires in the local recorders to provide complete isolation between the input and output circuits. Each channel has its own independent reference voltage source, a highly-regulated ac to dc solid-state converter, which is turned on and off by the power switch of the associated recorder. The remote readout instruments have a range of 0 to 5 v, while the data range is 1 to 5 v. Thus, failure of the retransmission system is indicated when the readout pointer falls below the normal zero value of the variable.

Process system information is in the form of a 10- to 50-ma direct current, just as used in the primary instrument circuits in the LITR control room; ECI current-to-current converters are used, one per channel, to supply isolation between the remote and local current loops. Here again, retransmission system failures are indicated at the remote console by the below-zero readings of the associated instruments which have a 0- to 50-ma range.

In both the nuclear and process instrumentation channels, the isolation provided by the retransmission system permits multiconductor cables to be used safely for carrying the information to the remote console. The failure of one or more of these channels certainly is to be investigated and corrected within a reasonable period of time, but such failures would not ordinarily constitute either a sufficient or necessary reason for shutting down the reactor.

Shim-rod-position information is handled by a synchro system. Both coarse (270° rotation for full rod travel) and fine (one turn per inch of rod travel) transmitters are installed on the rod drives, and corresponding receivers with readout dials are located on the local control panel. Only the coarse information is transmitted to the remote console. A different system is used to provide regulating-rod position information to the remote console since this information is to be recorded. For uniformity, the recorder used for this purpose is identical to the others on the console and thus requires the same input signal. The signal (10 to 50 ma dc) is obtained in this instance from a system composed of three devices: (1) a multiturn potentiometer directly coupled to the rod drive; (2) a regulated dc source which supplies current to the potentiometer; and (3) an ECI voltage-to-current converter which is connected on the input side to sense the 1- to 5-v rod-position-proportional signal from the potentiometer, and on the output side to the recorder through the underground cables. Regulating-rod position is indicated, but not recorded, in the local control room, a single turn synchro system being used.

Information that the reactor coolant-system fans are or are not operating is obtained by sensing the current in one phase of each of the driving motors. No attempt was made to calibrate the indicating instruments installed in the remote console, since knowledge of the motor currents in amperes is unimportant. One advantage of this approach is that the instruments used could be duplicates of the others on the console. Another advantage is that routine calibration checking and correcting is not necessary.

Rod-position and fan-speed information are supplied as an operating convenience, and loss of some or all of this information is considered a nuisance, not a hazard. Repairs may be effected when it becomes convenient to undertake them.

Disconnecting Means. - Isolation of the remote from the local console may be effected partially or completely as the occasion dictates. Partial isolation means that the controls on the remote console are disabled and thus cannot interfere with the operation of the reactor from the local control station. The need for such an arrangement is self-evident. Isolation is established by the operator at the LITR main control station by turning the reactor control power key switch to its Local position. In addition to the other changes, the switch, when in this position, disables the remote annunciator system and permits local prestart and annunciator checks to be made without generating unwanted audible interference in the ORR control room.

Complete isolation is also possible; every conductor connecting the local to the remote station may be disconnected, permitting work to be performed at the remote station without regard to, or interference with, any operation or testing taking place at the LITR control room. The disconnects, one per conductor, are part of the terminal strips used to join the wiring at the ORR control room end to the multiconductor cables from the LITR. If the circuits are not all reconnected and remote operation is attempted, a number of undesirable conditions may develop; but in no case will this prevent the operator or the instrument channels from taking protective action. A detailed description of some of the circuits will help to explain how this is made possible. When the scram switch provided at the remote console is actuated, it closes one circuit and opens another. The open circuit controls a normally de-energized relay, while the closed circuit controls one which is normally energized; changing the state of either relay causes the reactor to scram. Assuming that the circuit to the de-energized relay is not reconnected following some maintenance work at the remote console, the operator is still able to scram the reactor in the usual manner, although he operates only the normally energized scram relay. If the coil circuit of this latter relay is not reconnected, it will not be possible to start the reactor, since the scram circuit will not clear. Indicating lights are provided at both the local and remote control stations to show that the scram relays have or have not been operated when a scram has been demanded. Concerning the

instrument channels, it will be remembered from the description given earlier that none of the protective circuits were carried out of the LITR building and thus cannot be affected by any situations arising at the remote location.

Failure to reconnect all or part of the control circuits will, at worst, interfere only with operations. If a conductor in the fan-motor control circuit is left disconnected, one of three conditions will develop: the fan cannot be started, the fan will run only at high speed, or it will run only at low speed. In the case of the preferred shim rod, the operator might not be able to secure withdrawal or insertion; but, again, this is only an operating inconvenience. Shim-rod withdrawal would be needed for one of two reasons: either to get the regulating rod back in its operating range, or to align the three shim rods in the core. Neither situation, if left uncorrected, will lead to anything worse than a slow reduction in the operating power level of the reactor. Since the reactor cannot be operated manually (without servo control) from the remote console, the principal reason for being able to insert the preferred rod from that location would be to realign the three rods. Loss of this capability, again, is only an inconvenience.

As far as the remote annunciators are concerned, any disconnections will be quite apparent, since either one or more of the units cannot be cleared by use of the "Acknowledge" and "Reset" buttons on the console, or no unit will respond to the preoperational checks.

9. SHIELDING

9.1. Introduction

Shielding of the reactor and of portions of the coolant system has been provided as needed, and the shielding thickness has been increased as required by the several increases in power level from 500 kw up to the present 3 Mw. Figures 9.1.1 through 9.1.3 show the radiation readings on February 8, 1967. All areas where the radiation level is above 2.5 mr/hr are designated as "Radiation Zones" and are barricaded to allow only limited personnel access. Radiation dose accumulations by the reactor operator average well below the tolerance specified in AEC Manual Chapter 0524, Standards for Radiation Protection.

9.2. Reactor Shielding

The original shielding provided around the reactor tank for 500-kw operation was a minimum thickness of 9 ft of unmortared solid normal concrete blocks. The innermost blocks were stacked in a square array around the reactor tank with the sides of the square about 4 in. from the reactor tank. A cylindrical layer of boron-carbide-impregnated flexible 1/8-1/4-in.-thick plastic was fitted around the tank between the blocks and the tank and spaced about 3 in. from the reactor tank. The remaining space between the tank and blocks was filled with loose river sand. Radiation has probably destroyed the plastic; however, a vertical layer of boron carbide and carbon should still remain in the sand. Figure 9.2.1 is a photograph of the east side of the shield during construction.

When the reactor power level was increased to 1.5 Mw, a 1-ft thickness of mortared concrete block was added to the shield and plastered to provide a smooth surface. This addition required extending the beam-hole thimbles. At the time this was done, the beam holes were provided with a venting system. This was done by connecting a 1-in.-diam pipe from the normal off-gas header into the top of each beam-hole thimble 1 ft from the outer end (Fig. 9.2.2). Several screened 1/4-in.-diam holes in each of these pipes allow air to be vented from within the reactor shield to the off-gas. This prevents outleakage of radioargon from the reactor shield.

ORNL DWG. 67-5020

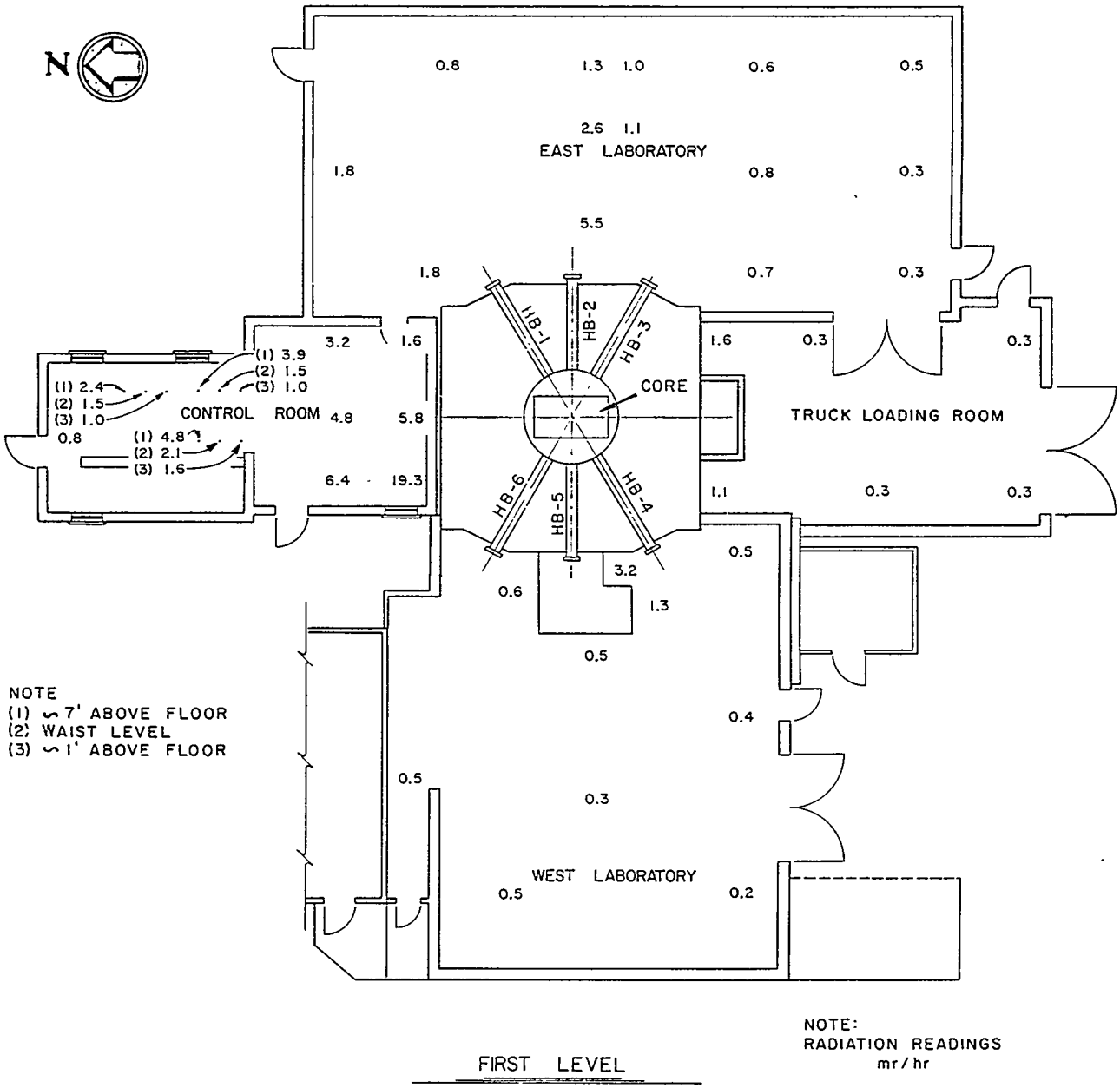

Fig. 9.1.1. Radiation Readings in the LITR Building, Ground Level

ORNL DWG. 67-5021

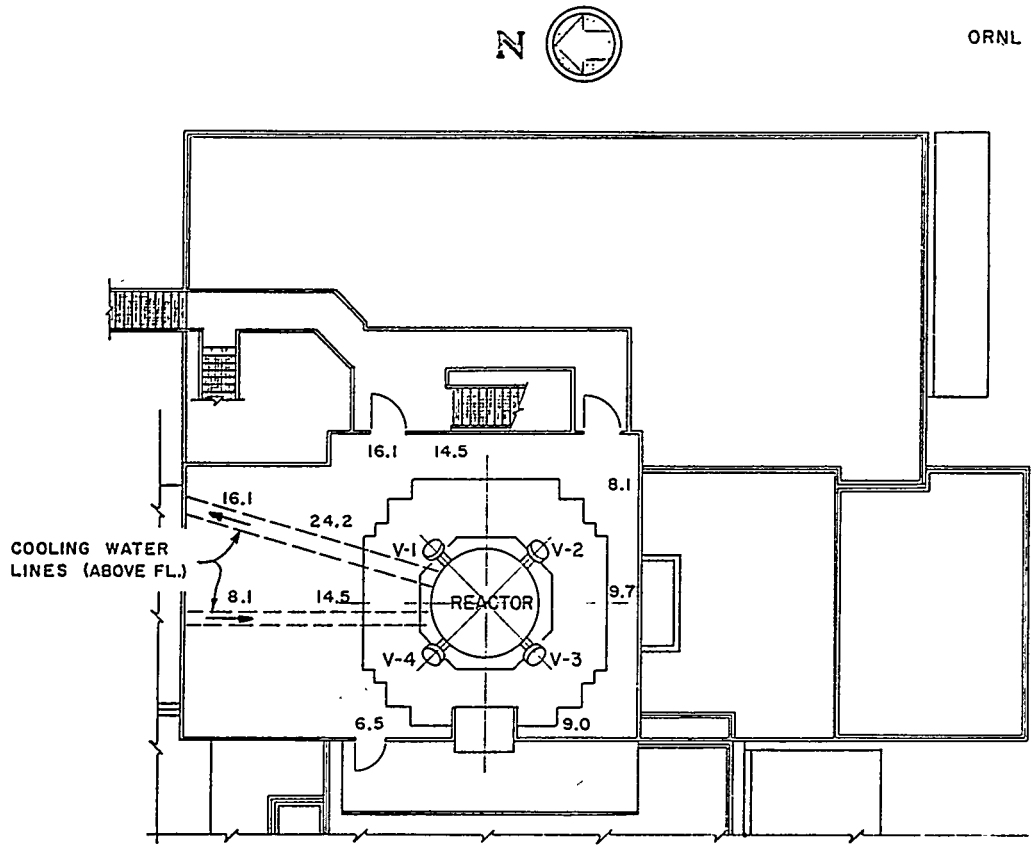

SECOND LEVEL

NOTE:
RADIATION READINGS
mr/hr

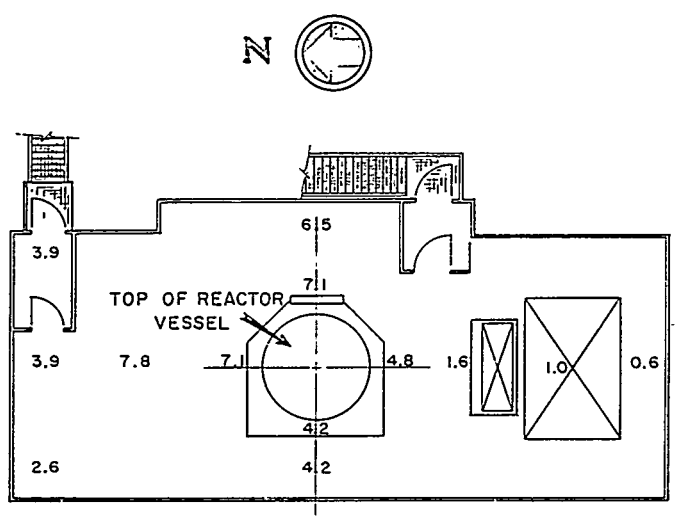

THIRD LEVEL

Fig. 9.1.2. Radiation Readings in the LITR Building, Second and Third Levels

ORNL DWG. 67-5022

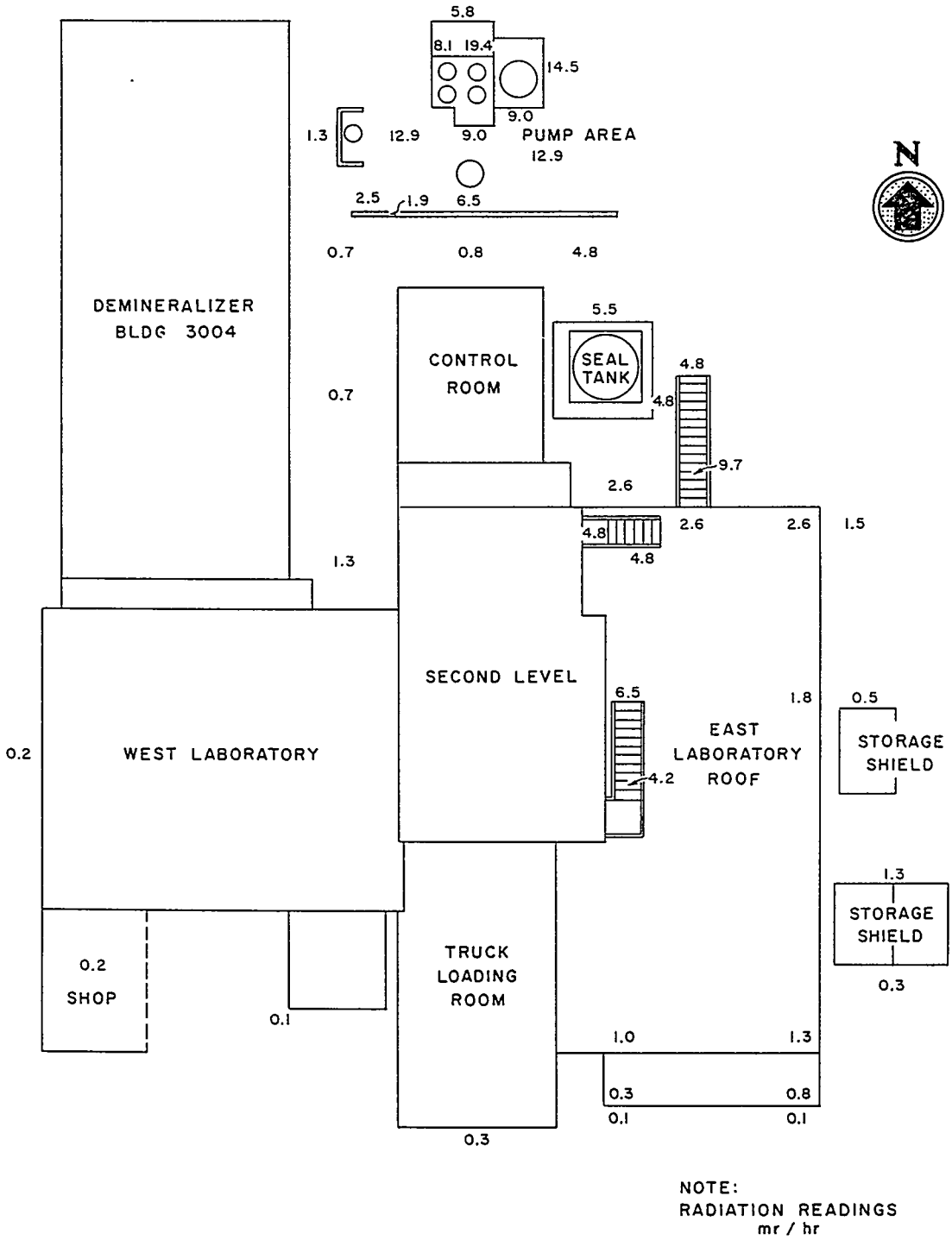

Fig. 9.1.3. Radiation Readings Around the Outside of the LITR Building

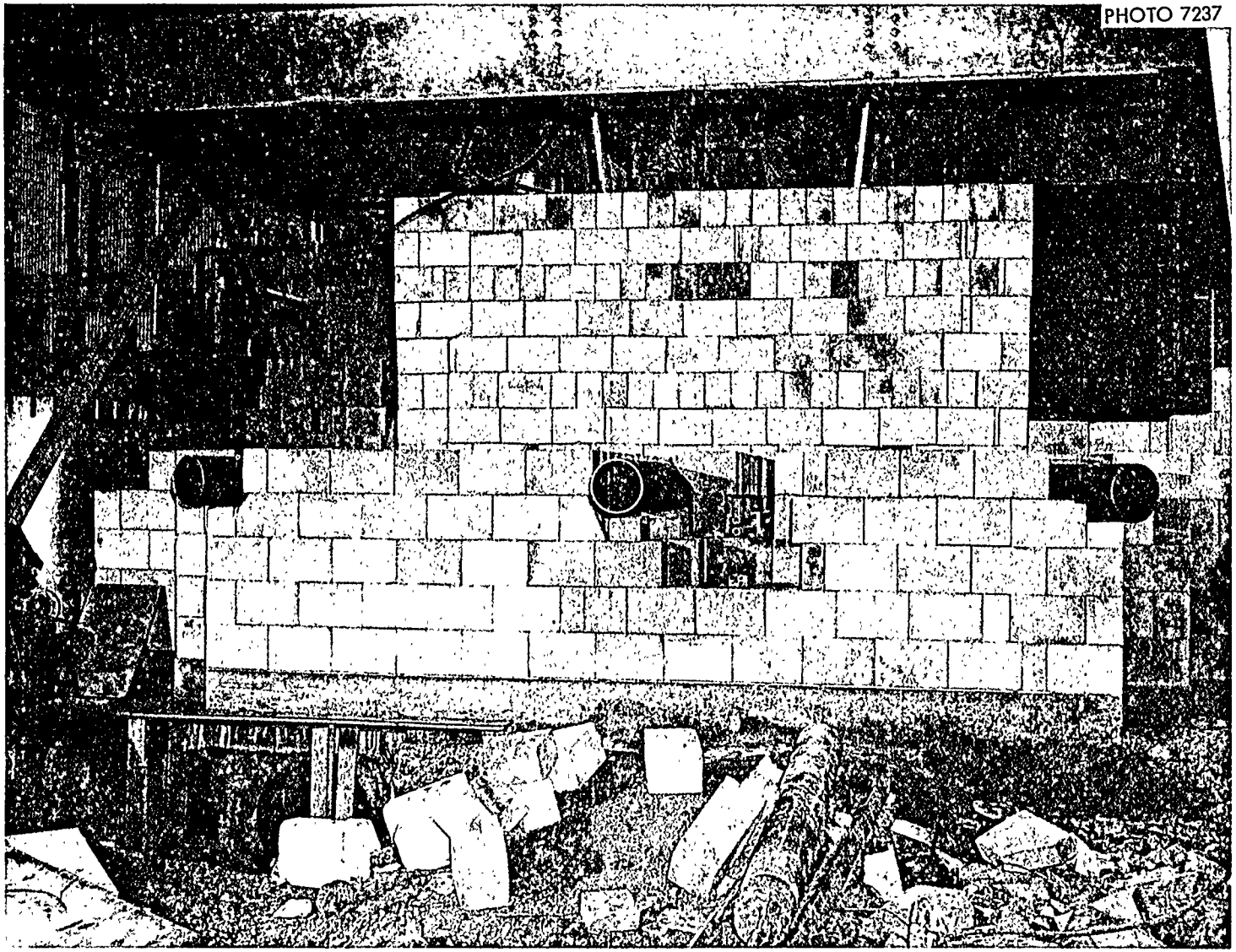

Fig. 9.2.1. Construction of LITR Shield

ORNL DWG. 67-5023

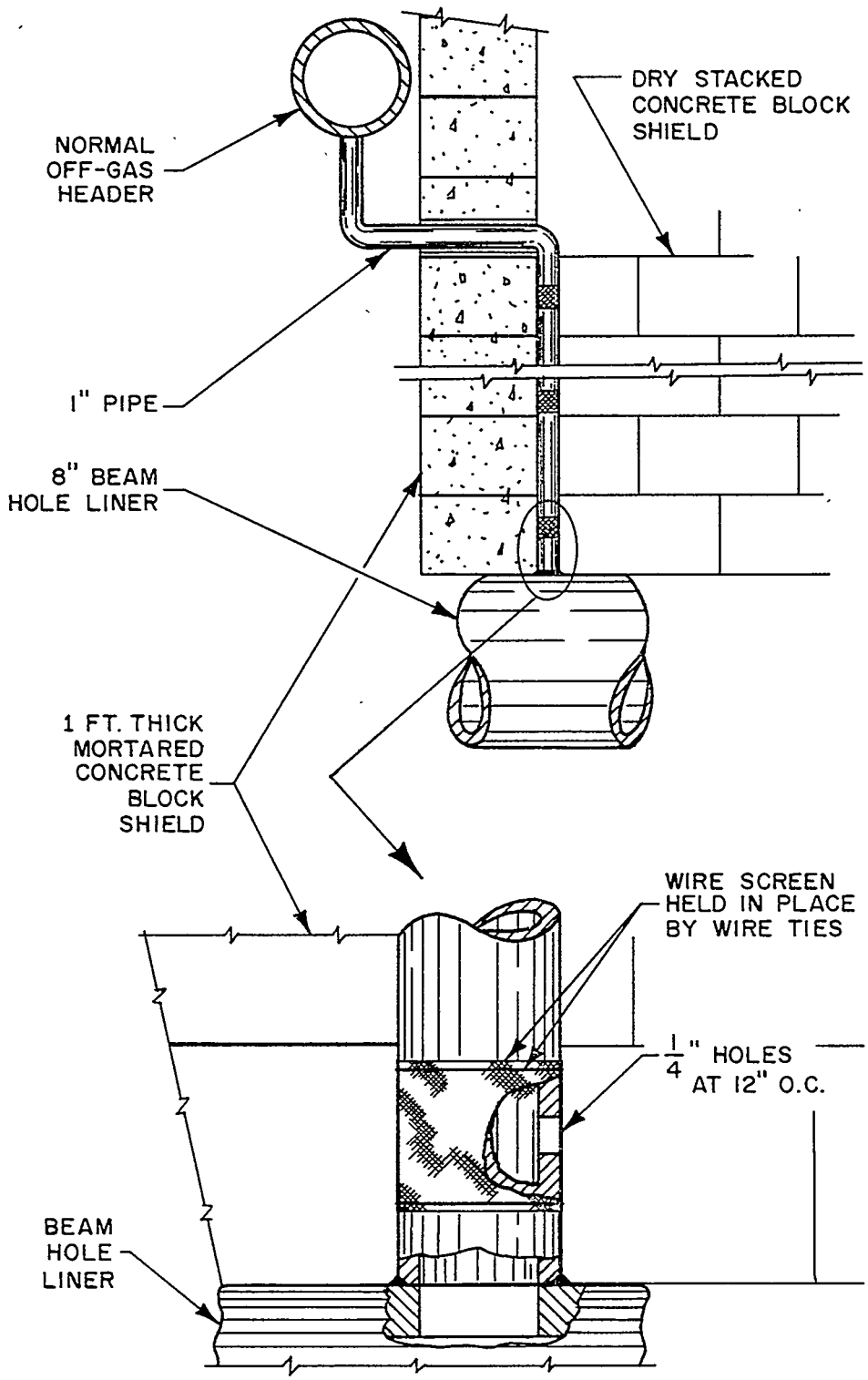

Fig. 9.2.2. Venting System for Beam Holes

When the reactor power level was increased to 3 Mw, further additional shielding was provided by mounting 1-in.-thick steel plates on the reactor shield where needed.

As shown in Fig. 5.2.4, the concrete-block shield is supported on a heavy steel grill laid on steel beams which are supported by the concrete walls of the subpile room and by the reactor-tank support columns. Near the reactor tank the steel grill is covered with sheet steel to prevent loss of the sand which was poured between the concrete blocks and the reactor tank.

Precast 1-ft-thick concrete slabs formed the original top of the reactor shield; but, as the reactor power level was increased, additional mortared concrete-block shielding was built upon the slabs to shield the upper part of the reactor tank.

Shielding above the reactor core is provided by 19 ft 8 in. of water in the reactor tank. A small additional amount of shielding is provided by the 2-in.-thick and 1/2-in.-thick steel discs which form the top and bottom, respectively, of the top plug shielding compartment. The similar compartment in the MTR top plug is filled with lead; at the LITR the lead is not required.

9.3. Water-System Shielding

Those portions of the inlet and exit coolant pipes within or near the second floor enclosure are shielded with lead. The inlet line is enclosed in a 1-in.-thick cylindrical lead shield (Fig. 9.3.1) and the exit line is enclosed in 3 1/2 in. of lead (Fig. 9.3.2).

The seal tank is shielded by an open-top enclosure (Fig. 6.3.1) made of a combination of mortared solid barytes concrete blocks and ordinary concrete blocks. Portions of the shield not requiring high density are of ordinary concrete block. The south and west sides of the shield are 8 in. thicker than the other sides since they face the east experiment room and the control room.

Except for a vertical section of the inlet line near the control room west entrance, the remainder of the coolant system is either underground or remote from areas frequented by personnel. A shadow shield wall made

ORNL DWG. 67-5024

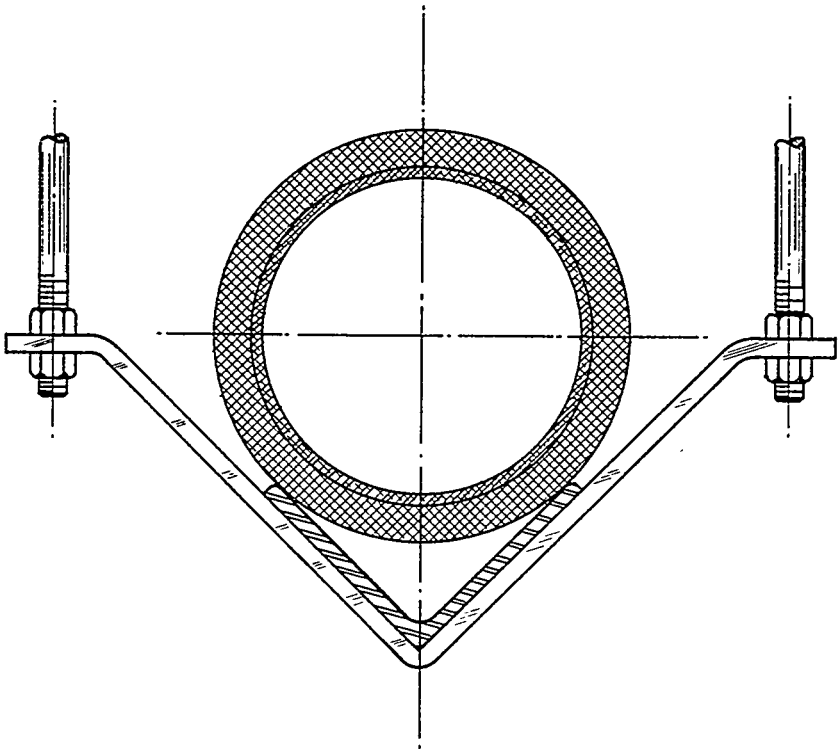

PRIMARY WATER INLET LINE
1 INCH Pb SHIELDING
8 INCH Al PIPE

Fig. 9.3.1. Inlet Water Line Shielding

ORNL DWG. 67-5025

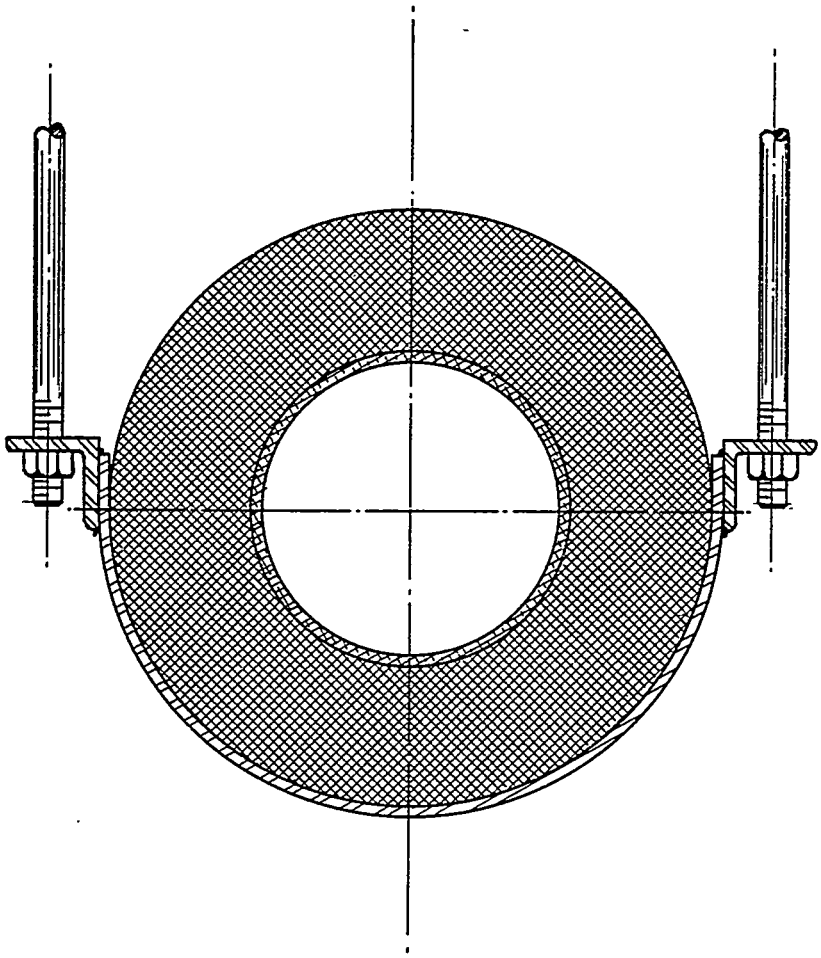

PRIMARY WATER EXIT LINE

$3\frac{1}{2}$" Pb SHIELDING

8" Al PIPE

Fig. 9.3.2. Outlet Water Line Shielding

of barytes-concrete block (Fig. 6.4.1) separates the pump, filter, and heat-exchanger area from a personnel thoroughfare; and partial enclosures of barytes concrete block are provided for the filter and demineralizer. The vertical section of the inlet water line near the west entrance of the control room is enclosed in a barytes-concrete-block shield from ground level up to the beginning of the 1-in.-thick lead shield.

10. UTILITIES

10.1. Electrical Systems

The Tennessee Valley Authority (TVA) supplies 161-kv power to primary substation 0901 where the voltage is stepped down to 13.8 kv, which supplies substation 3000. The output of substation 3000 is 2.4 kw with a capacity of 10,000 kva (see Fig. 10.1.1). Four smaller substations are fed from substation 3000: No. 3-1, located north of Building 3005; No. 3-2, located west of Building 3005; No. 3-3, located on the east side of Building 3001; and No. 4-4, located east of Building 3012.

10.1.1. Normal Power System

Details of the distribution of normal electric power to the LITR are shown in Figs. 10.1.2, 10.1.3, 10.1.4, and 10.1.5.

10.1.2. Emergency Power System

There are two emergency power systems, one from the ORR diesel-powered generator, the other from a gasoline-powered generator located just south of the west room at the LITR. The 2-kw line from the ORR diesel-powered generator supplies power for the shim-rod seat lights, building evacuation system, and public-address system. Because of the requirements of the radiation warning system, the existing 25-kw gasoline-motor-powered generator is maintained in operating condition to supply emergency electrical power for this purpose as well as for experiments. Figure 10.1.6 shows the details of the emergency electrical power system.

10.2. Plant Water Systems

The LITR plant water supply is obtained through either of two 24-in. water mains. The normal water main is fed from the ORNL (potable) water reservoir located just north of the Laboratory area at an elevation of 1000 ft. The alternate water main is fed from a 3-million-gal (potable) water reservoir located on Haw Ridge at an elevation of 1035 ft. Both mains are connected in such a manner that water is supplied from either or both sources on demand.

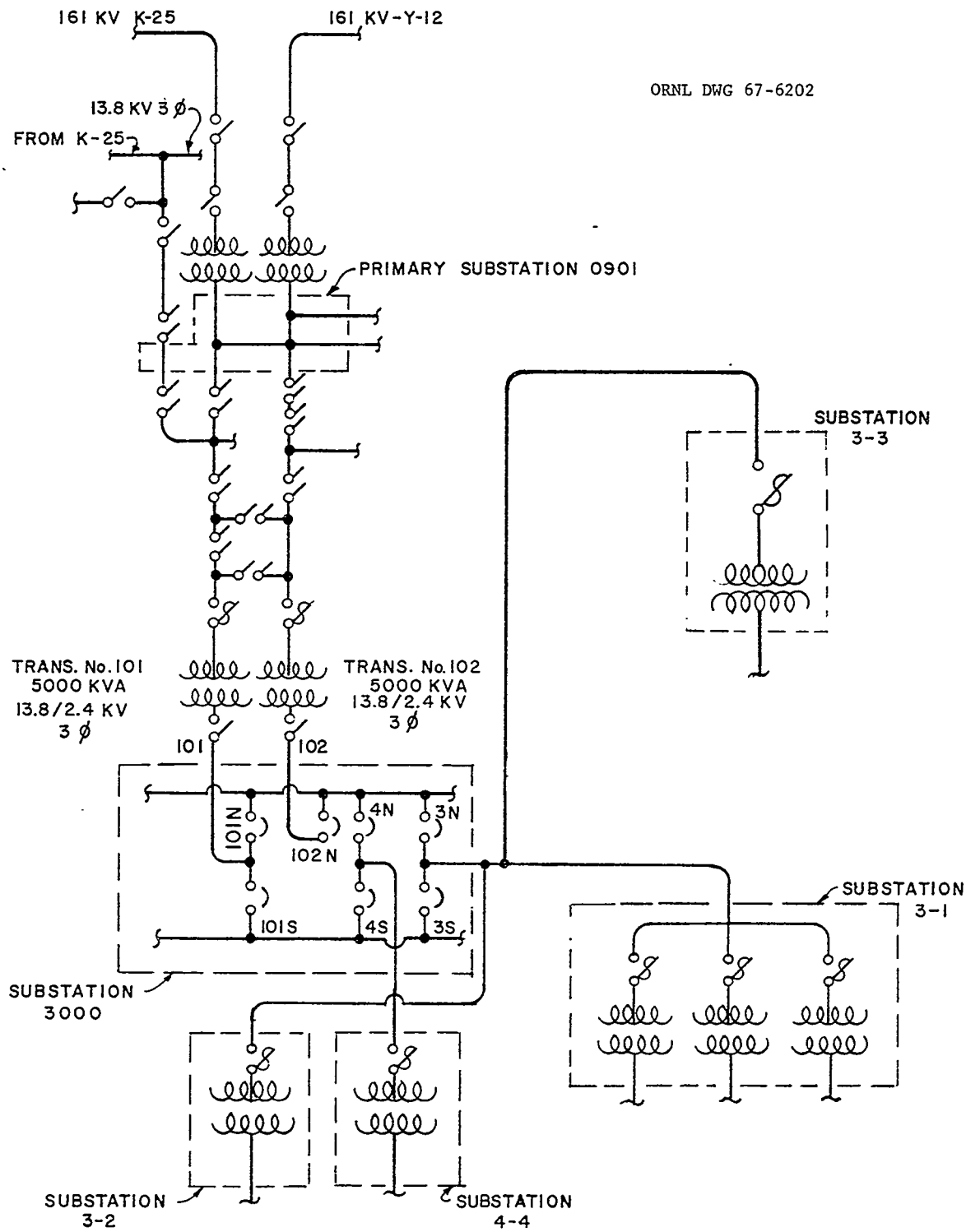

Fig. 10.1.1. Electrical Power Distribution

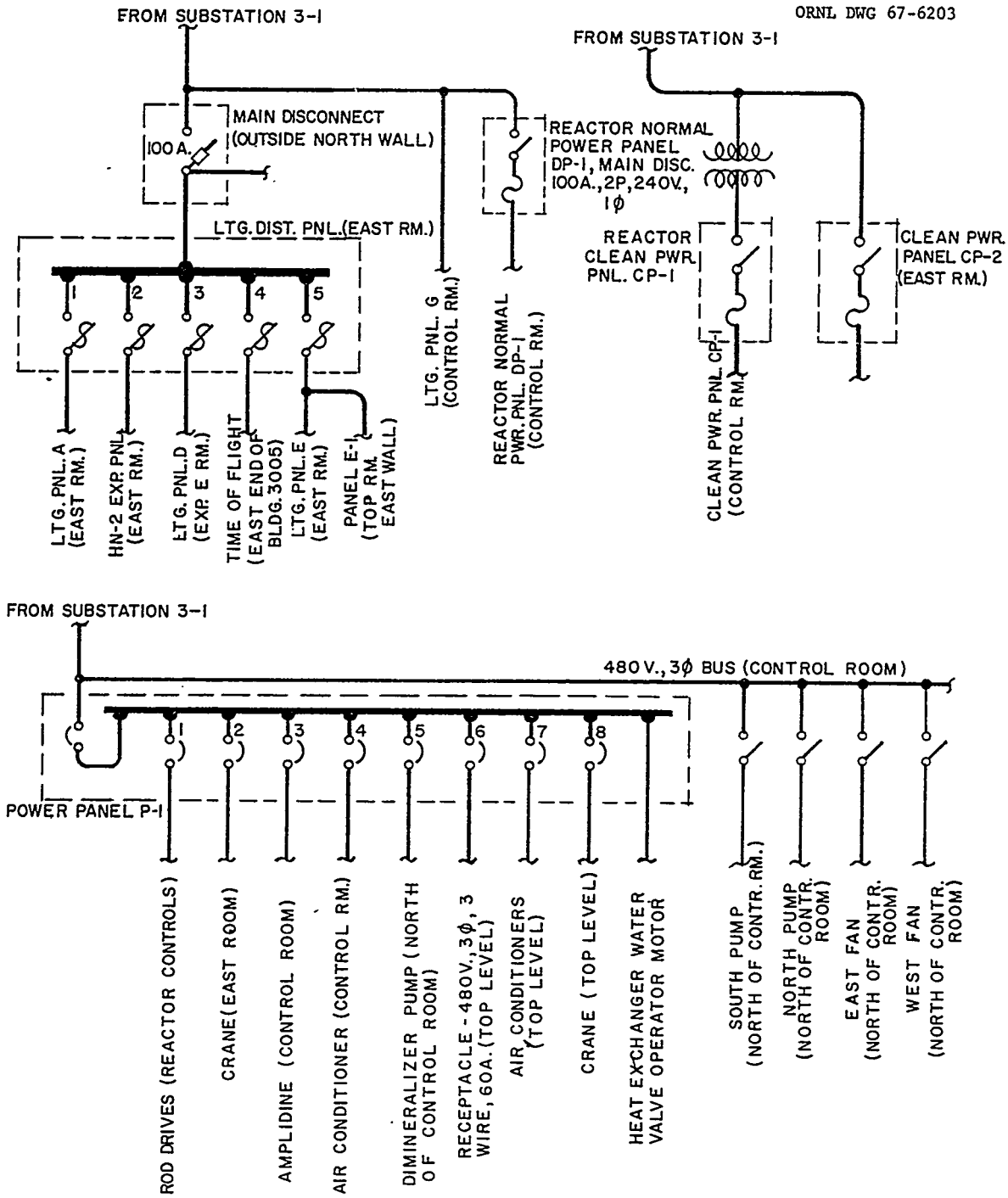

Fig. 10.1.2. Electrical Power Distribution from Substation 3-1

ORNL DWG 67-6204

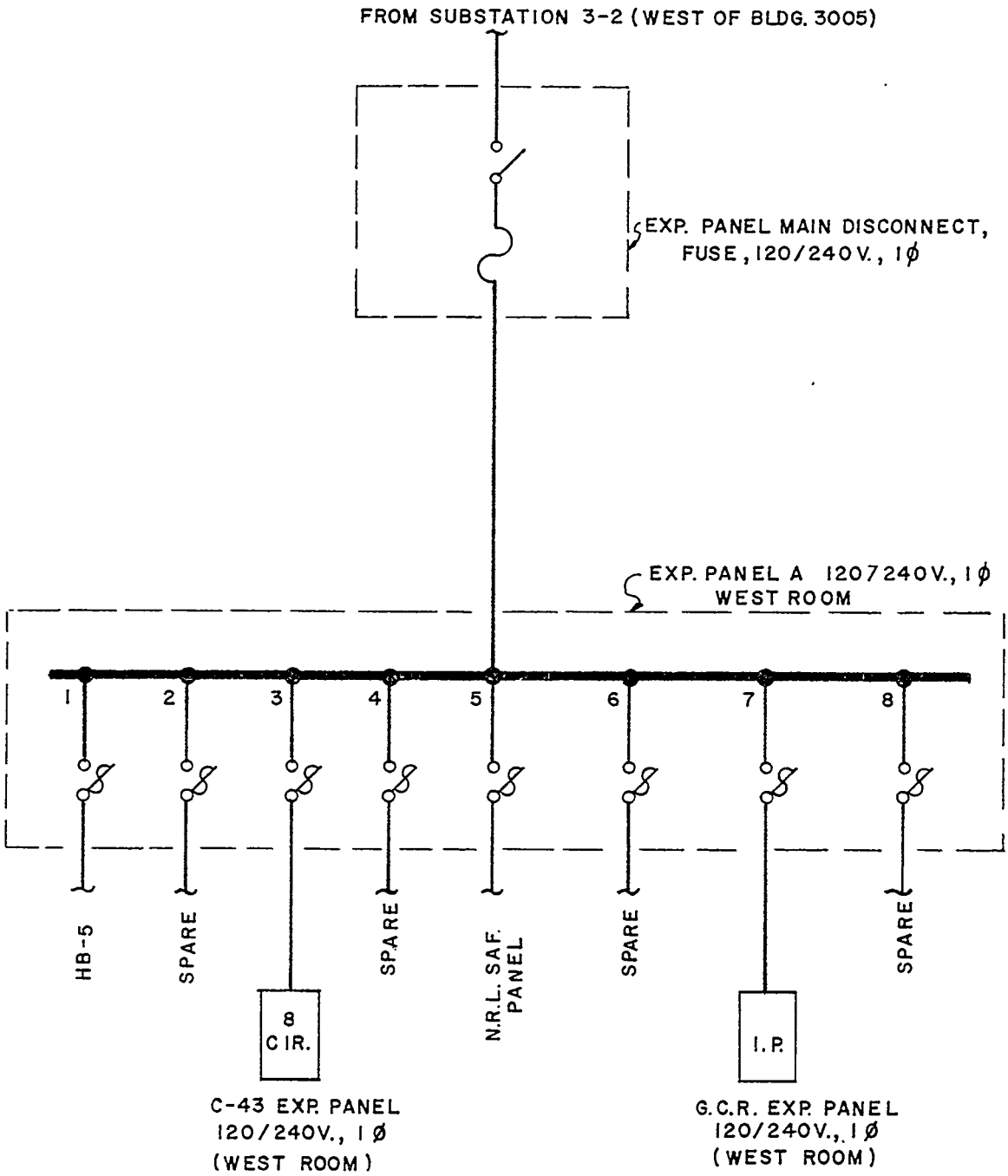

Fig. 10.1.3. Electrical Power Distribution from Substation 3-2

ORNL DWG 67-6205

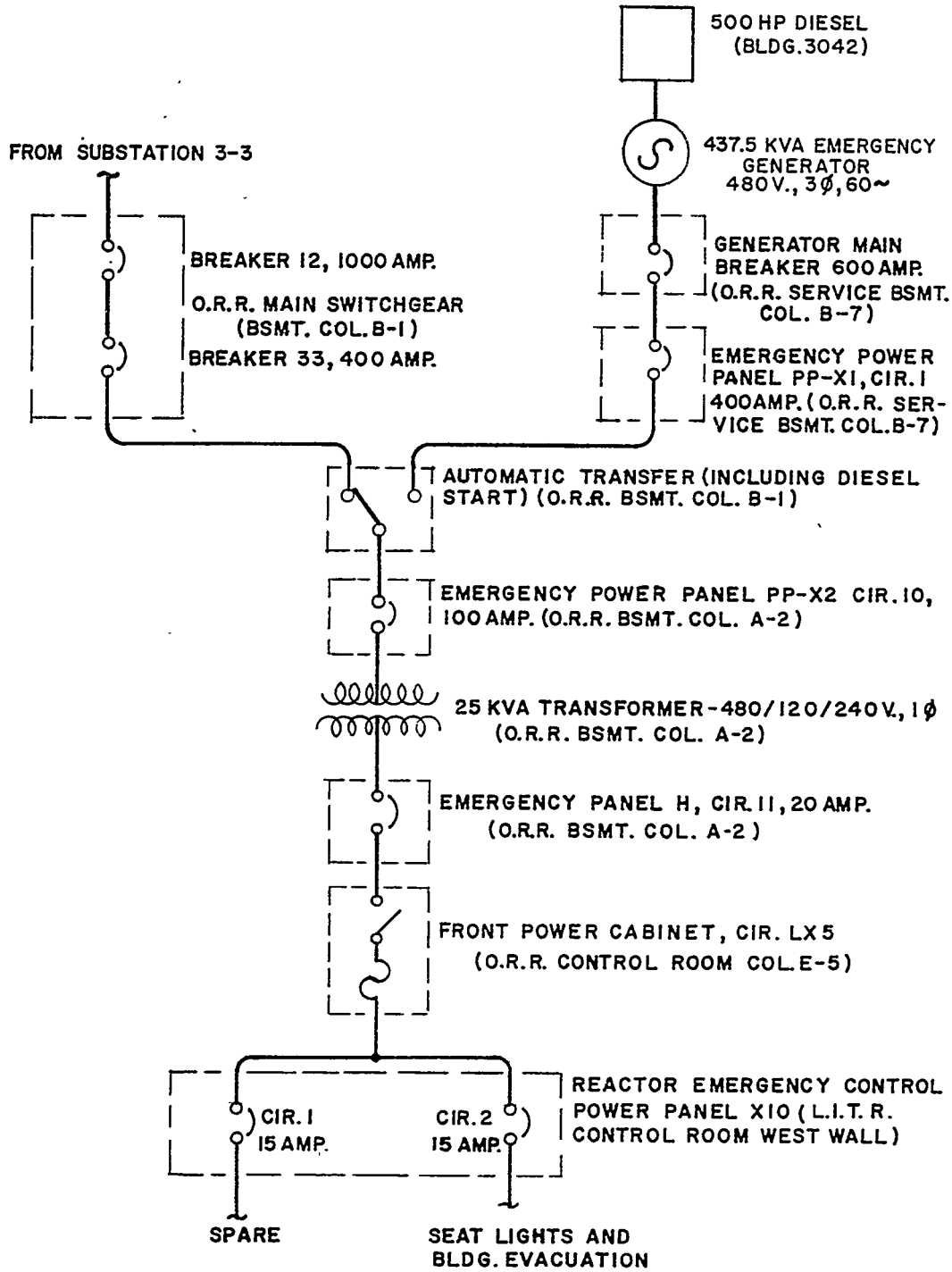

Fig. 10.1.4. Electrical Power Distribution from Substation 3-3

ORNL DWG 67-6206

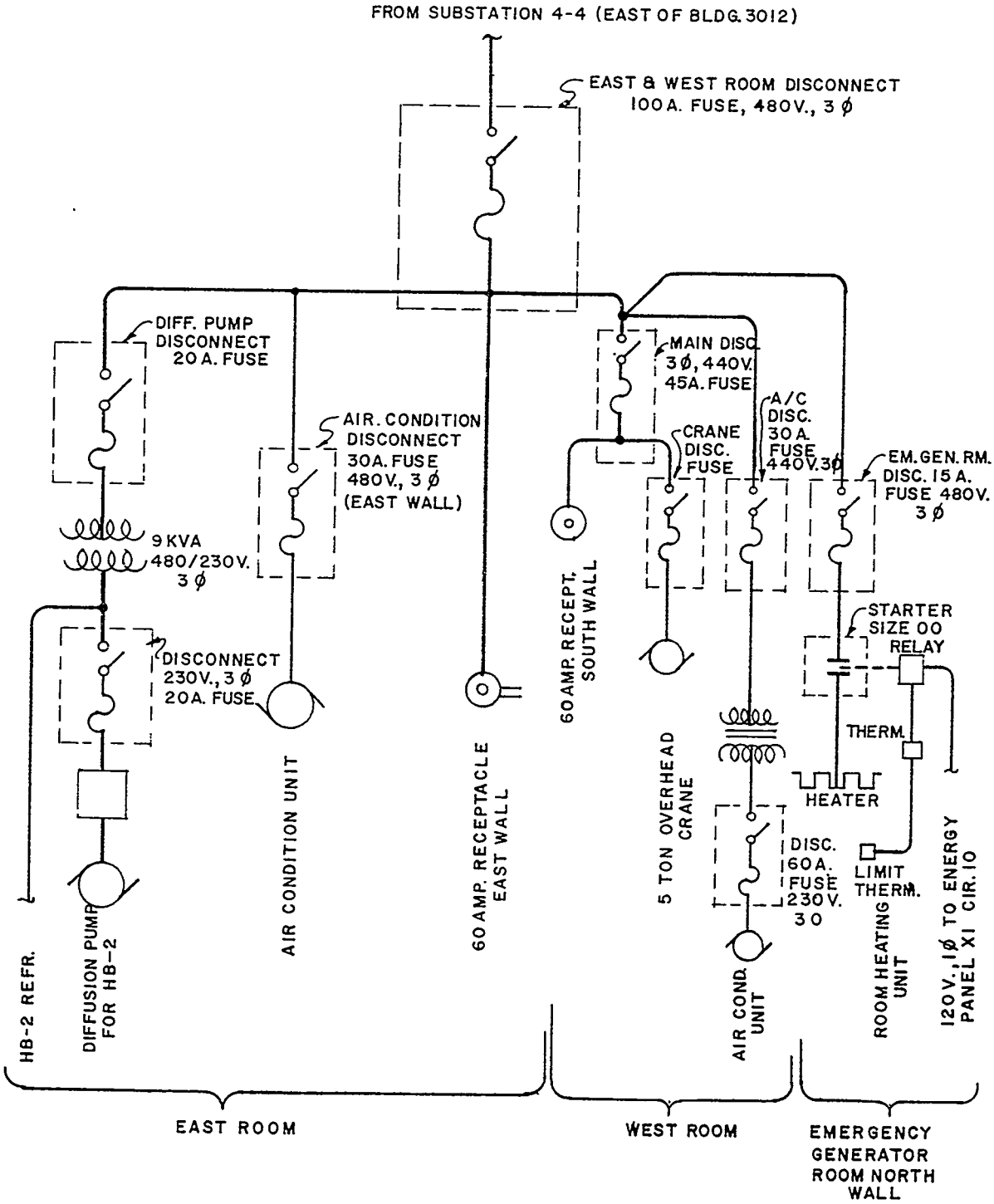

Fig. 10.1.5. Electrical Power Distribution from Substation 4-4

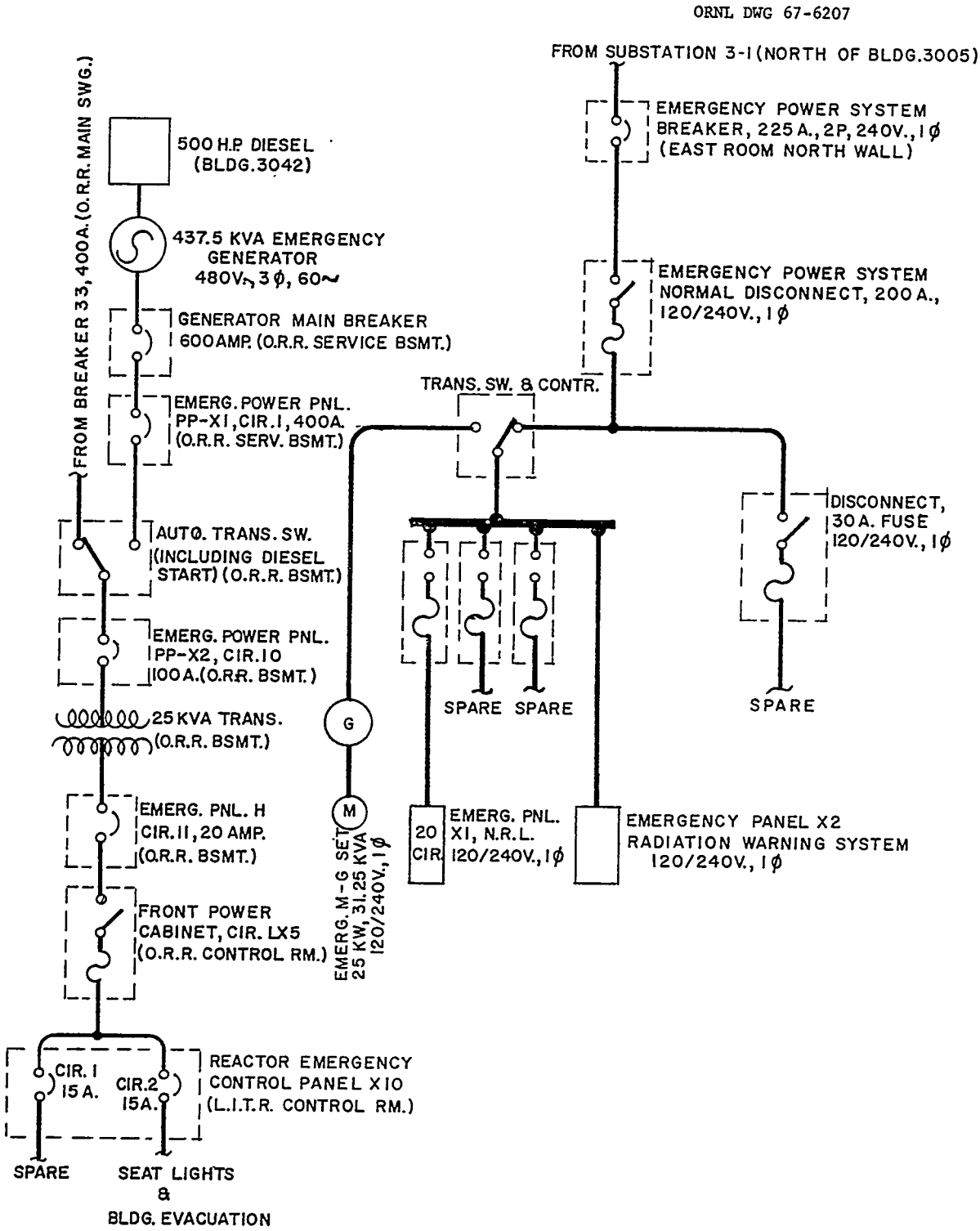

Fig. 10.1.6. Emergency Electrical Power Distribution

Supply water to the plant demineralizer system and experiments is fed from the potable system through backflow preventers. Because of these separations, the plant water systems are divided into three systems: potable, process, and demineralized.

10.2.1. Potable Water System

Potable water is supplied from the 8-in. mains of the ORNL potable water system and is distributed to the LITR fire protection system. Water for plumbing needs is also supplied from this system throughout the building.

10.2.2. Process Water System

Process water for the use by the Operations Division and researchers enters the LITR building on the south side through a 4-in. line.

10.2.3. Plant Demineralized Water System

In addition to the primary coolant demineralizer, an independent demineralizer system is provided to produce an adequate supply of water for miscellaneous plant applications.

The demineralizer system consists of two parallel cation-anion units. This allows one pair to be regenerated while the other pair is in service. The system is located in Building 3004, which is adjacent to the LITR. The regenerant mixing facilities in this building are used for sending regenerant solutions to the LITR demineralizers as well as those in Building 3004. A flow diagram of this system is shown in Fig. 10.2.1.

The Building 3004 demineralizers, when either is in service, combine with a recirculating system to serve a dual purpose. The first includes maintaining the water level in the storage tank between 9 and 11 ft. Although the storage water demand may be small, the demineralizer unit will remain in service at all times in order to be ready for a greater demand. Secondly, recirculating the water from the storage tank through the demineralizer upgrades the quality of the stored water. It improves the specific resistivity to a range of 1.5-2.0 megohm-cm as

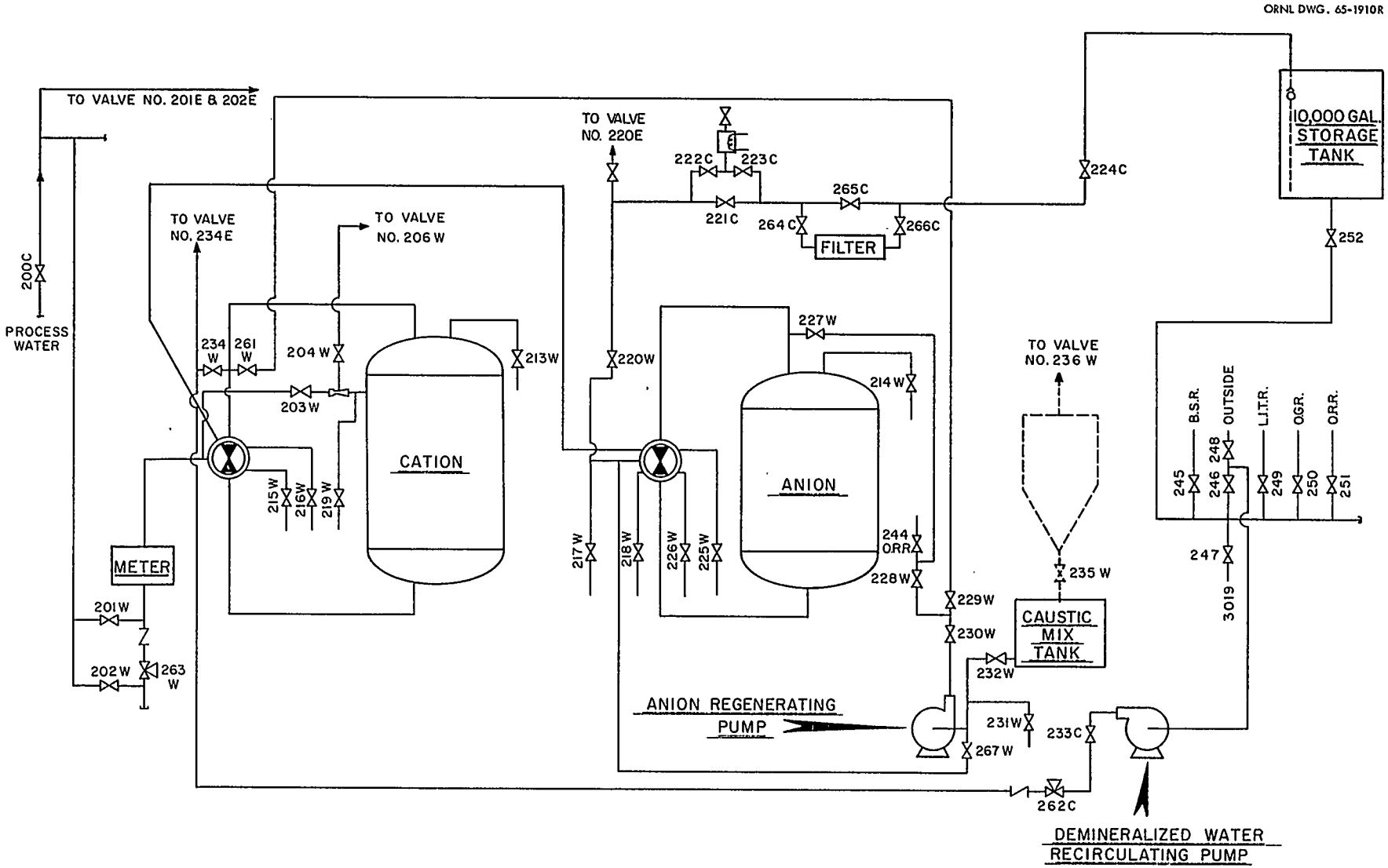

Fig. 10.2.1. Water Demineralizer for Plant

compared to a normal make-up, single-pass effluent of 0.6-0.8 megohm-cm. Demineralized water from the Building 3004 storage tank is supplied to various areas of the LITR as shown in Fig. 10.2.2.

10.2.4. Sprinkler System

The fire protection sprinkler system is the conventional dry-pipe type with fusable plugs in the sprinkler head. If the temperature of the plugs reaches 165°F, the plug will melt and release the high pressure air in the pipes. When this occurs, the valve between the potable water supply and the dry pipes opens and water flows into the sprinkler pipes. This flow of water causes a flow switch to initiate the signal to the single master alarm for this area, alarm box 221 on the south side of Building 3008.

Throughout the building sprinkler heads are separated by not more than 15 ft and are located within 7 1/2 ft of each wall.

10.3. Instrument Air System

Compressed air is furnished from the ORNL dry compressed-air system and enters the building through a 1 1/2-in. line under 100-psi pressure. This system provides air for air-operated valves, instrument operation, experiment cooling, pneumatic-tube operation, and operation of any other mechanism that requires air. Figure 10.3.1 is a flow diagram showing the distribution of compressed air.

10.4. Alarm and Communications Systems

There are six alarm and communications systems at the LITR, not including the control room annunciator system. These are:

1. Area fire-alarm system.
2. Area intercommunication system.
3. Sound-powered phone network.
4. Dial (Bell system) phones.
5. Public-address system.
6. Evacuation alarms.

ORNL DWG 67-6208

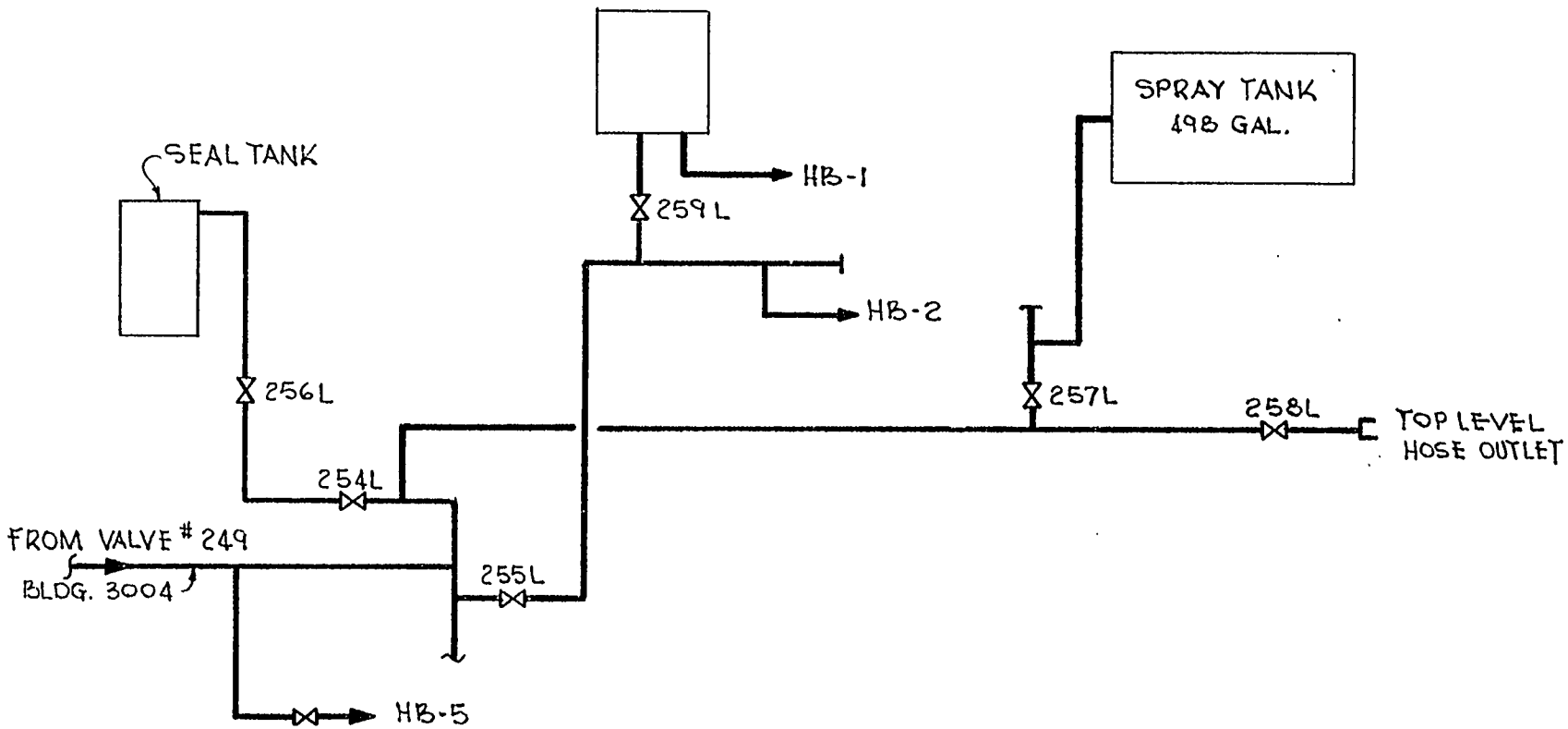

Fig. 10.2.2. Demineralized Water Flow Diagram

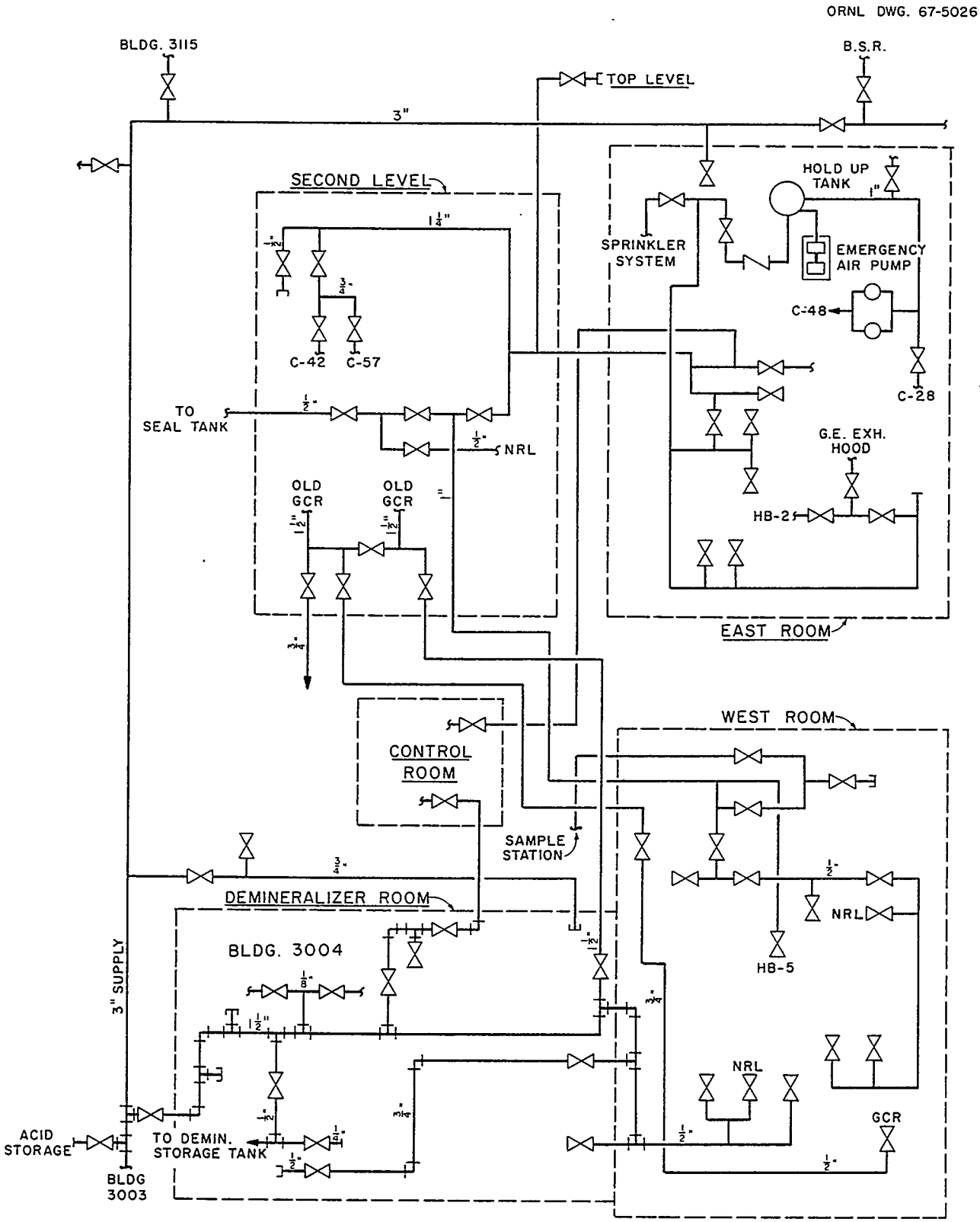

Fig. 10.3.1. Compressed Air Distribution

10.4.1. Area Fire-Alarm System

The area fire-alarm system has one box, No. 221, located on the south side of Building 3008. When actuated by a signal from a water-flow switch in the LITR sprinkler system, it transmits a coded signal over the ORNL fire-alarm system indicating the location of the fire. All these coded alarms are also given by repeater bells within sound of the LITR area. In addition, fire-alarm horns near the source of the alarm are energized.

10.4.2. Area Intercommunication System

This system allows the control-room operator to page and talk to persons in various locations throughout the area. It also makes it possible to check for unusual noise in some of the equipment areas. The master stations, located throughout the ORR-LITR complex, are capable of calling several stations at once to permit coordination of activity.

10.4.3. Sound-Powered Phones

The sound-powered phones are provided primarily for continuous communication between two areas for long periods of time, e.g., during equipment checkout. They are also used in high-noise areas and in infrequent-usage areas inappropriate for the intercommunication system.

10.4.4. Dial Phones

Regular dial phones are located at appropriate stations. The remote-control-room phone has an unlisted number to keep the phone free from unnecessary calls.

10.4.5. Public-Address System

Microphones for the ORR-LITR public-address system are located in the reactor control room, top room, shift supervisors' offices, secretaries' offices, and in the maintenance office. Speakers are located in each of the major areas of the building. Additional speakers are located outside to serve the nearby area. Three amplifiers are used in this system: one for inside speakers, one for outside speakers, and one is a standby. Emergency power for the public-address system is supplied from the ORR diesel-powered generator.

10.4.6. Evacuation Alarms

Both local and plant-wide evacuation instructions are given over the local public-address system. A plant-wide evacuation signal would come from the ORNL Emergency Center. The LITR local evacuation alarm, a tone signal obtained from an air-operated horn, can be initiated by the control-room operator by the use of switches located in both the remote and local control rooms.

10.5. Steam System

Steam is supplied to the LITR area from the general plant system, which operates at 125 psi with water-saturated steam. Figure 10.5.1 shows a flow diagram of the steam supply to the LITR. Steam is used only for heating and to prevent freezing in cold weather via steam trace systems. There is no condensate return system.

ORNL DWG 67-6209

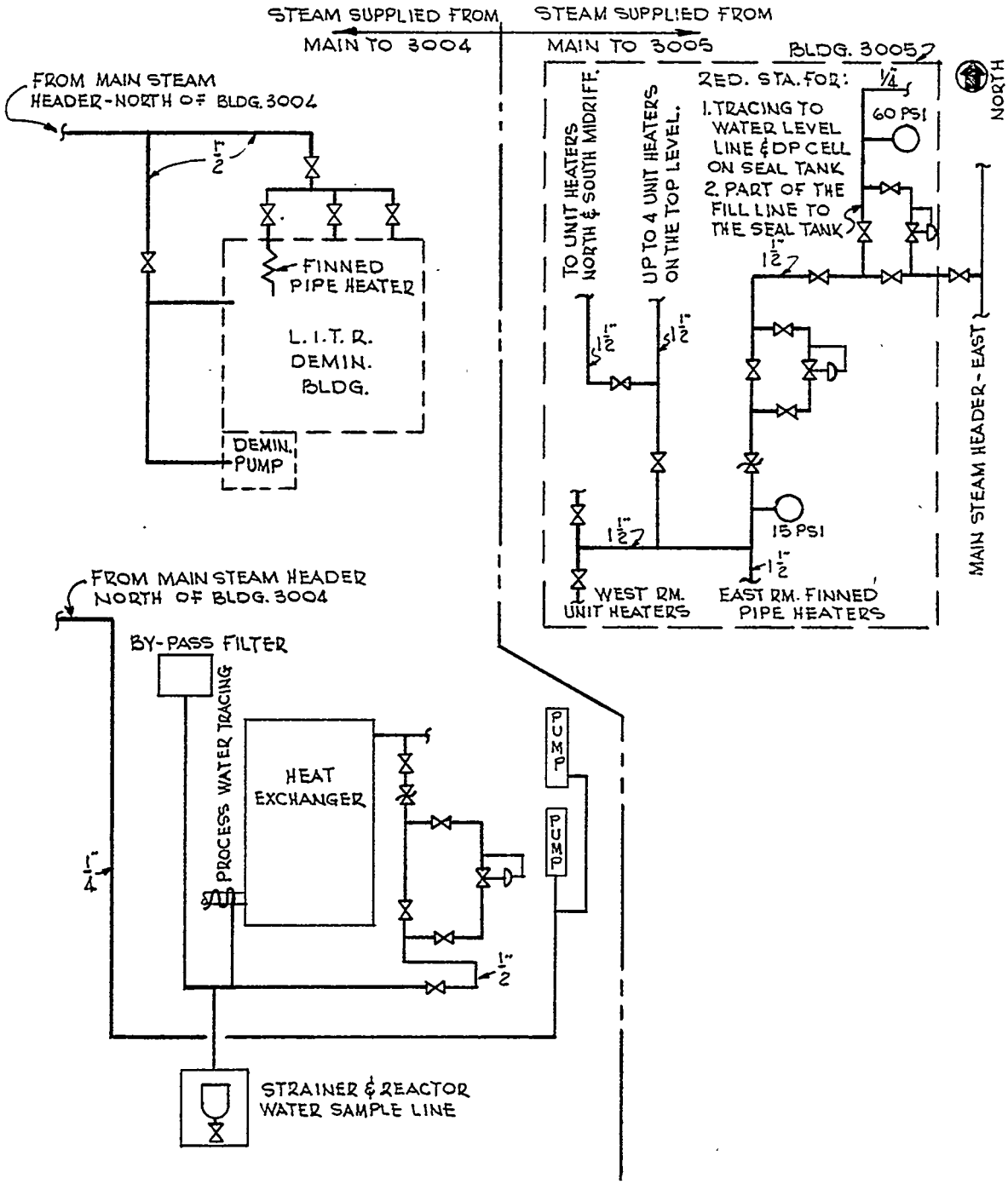

Fig. 10.5.1. Steam Distribution

11. WASTE-DISPOSAL SYSTEMS

11.1. Gaseous-Waste Disposal

Radioactive gaseous waste is disposed of by the three systems described in detail in Section 4: the cell-ventilation system and the two off-gas systems. The cell-ventilation system at the LITR is used to provide dynamic containment for the building and is intended to handle infrequent large-volue releases of gaseous and airborne radioactive materials; the off-gas systems are used to dispose of the routine low-volume releases from experiments and from various reactor components. Most of the radioactive materials released into these systems, except for noble gases, are trapped on absolute filters or charcoal traps and are ultimately disposed of by burial, as in the case of other ORNL solid waste.

11.2. Solid-Waste Disposal

Standard ORNL practice is followed in the disposal of solid waste. Nonradioactive burnable solid waste is disposed of by incineration in a central facility provided by the Laboratory. Nonburnable nonradioactive solid waste is disposed of in the Laboratory's sanitary land-fill area.

Low-level radioactive wastes (generally sealed in plastic bags) are placed in large covered steel boxes (Dempster-Dumpsters) which are removed by truck to the ORNL burial ground. Waste emitting radiation of less than 3.0 mr/hr at the surface may be temporarily stored at the work site in large specially marked cans and later disposed of in the manner described above.

Special procedures are used to remove highly radioactive solid waste. In some cases trucks with shielded cabs are used and the material is carried unshielded to the disposal area. For very high levels of radiation, it may be necessary to cut up the radioactive items either under water or in a hot cell and then to remove the pieces in lead casks. Final disposal is accomplished by burial using standard ORNL equipment and facilities.[1]

---

[1] F. N. Browder, Radioactive Waste Management at ORNL, ORNL-2601 (April 14, 1959).

11.3. Aqueous-Waste Disposal

All of the aqueous wastes from the LITR are, after suitable decontamination, eventually discharged to the Clinch River via one of the small streams flowing through the ORNL area. Laboratory procedures described in detail elsewhere[2] insure that the concentration of radioactive material in the river remains well below the maximum permissible concentration.

Aqueous wastes may be divided into four categories according to the type of treatment given the waste:

1. Storm Sewage. - This is untreated nonradioactive waste collected from storm and roof drains or from drains in the areas which are not subject to contamination. This waste is discharged directly to White Oak Creek.
2. Sanitary Sewage. - This includes waste from showers, sinks, and toilet facilities. It is processed by the ORNL sewage treatment plant, the effluent of which is discharged to White Oak Creek.
3. Process Waste. - This originates from various processes which normally produce uncontaminated or only slightly contaminated waste. The disposal system for this type of waste water is designed to handle an activity concentration of <10 μc/gal (~5700 dis min^{-1} ml^{-1}). The waste is treated in the ORNL radioactive-waste disposal system and released to White Oak Creek. Figures 11.3.1 and 11.3.2 are flow diagrams of the portion of the waste system that serves the LITR.
4. Intermediate-Level Waste (ILW). - This originates as demineralizer regeneration fluids, decontamination and "hot sink" drainage, and other deliberate discharges of radioactive liquids. In general, it includes discharges which have, or are likely to

[2] J. F. Manneschmidt and E. J. Witkowski, The Disposal of Radioactive Liquid and Gaseous Waste at ORNL, ORNL-TM-282 (August 17, 1962).

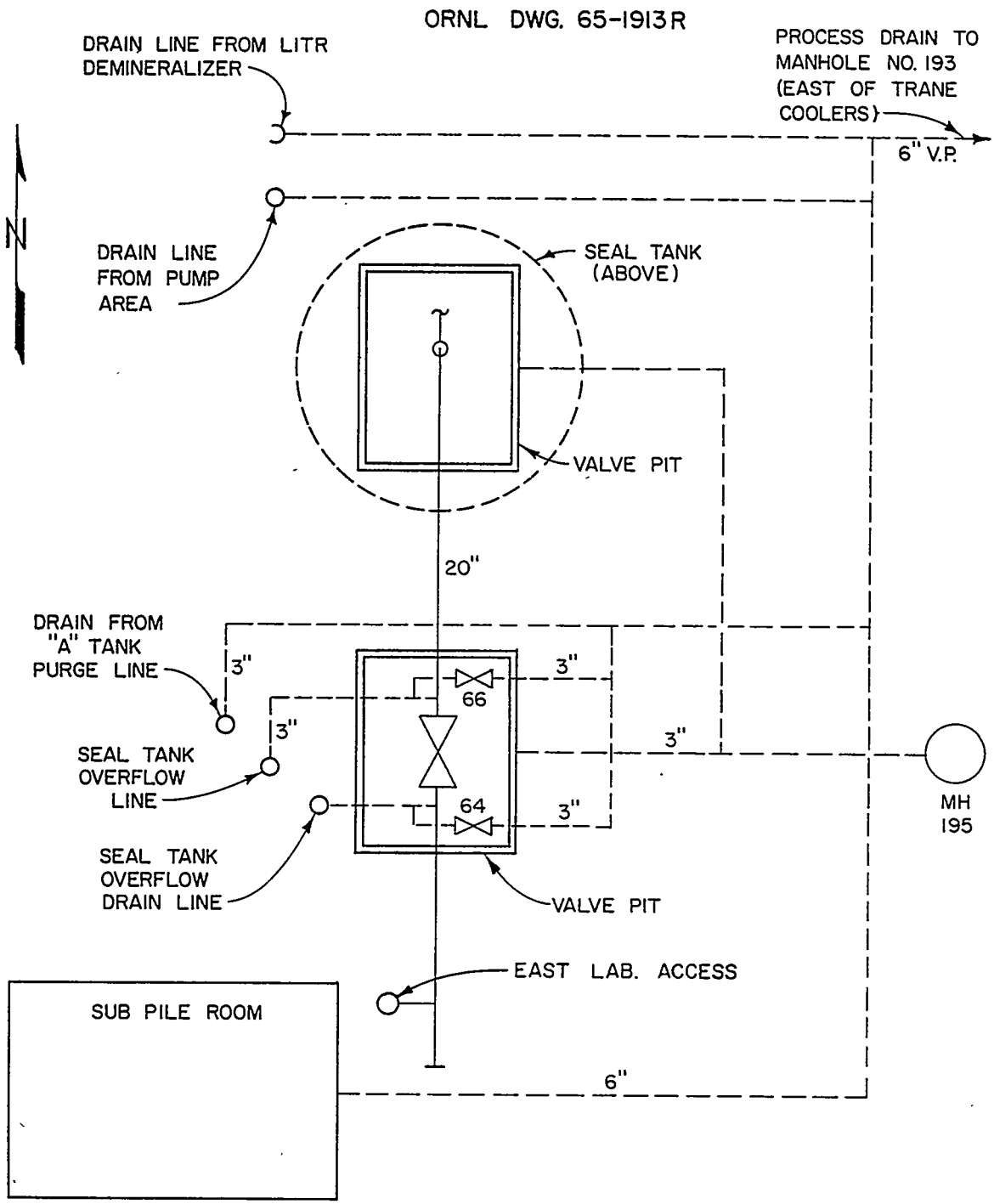

Fig. 11.3.1. Flow Diagram of the LITR Process Waste System

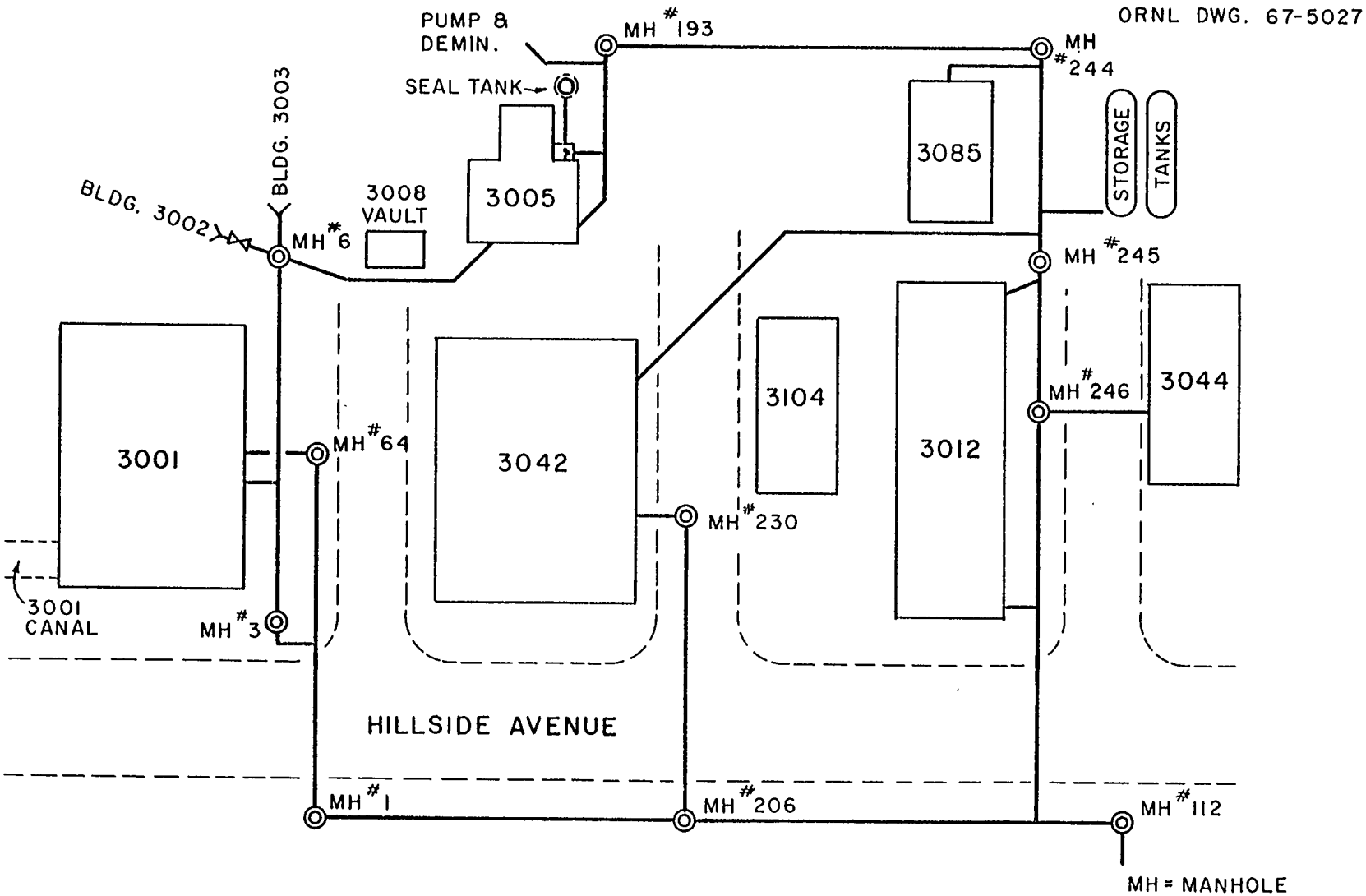

Fig. 11.3.2. Flow Diagram of the Reactor Area Process Waste System

have, activity concentrations in excess of 10 μc/gal. This waste is concentrated by a factor of approximately 25 in the ORNL Waste Evaporator before being disposed of by hydrofracture methods or storage. Figure 11.3.3 is a flow diagram of the part of the system installed at the LITR.

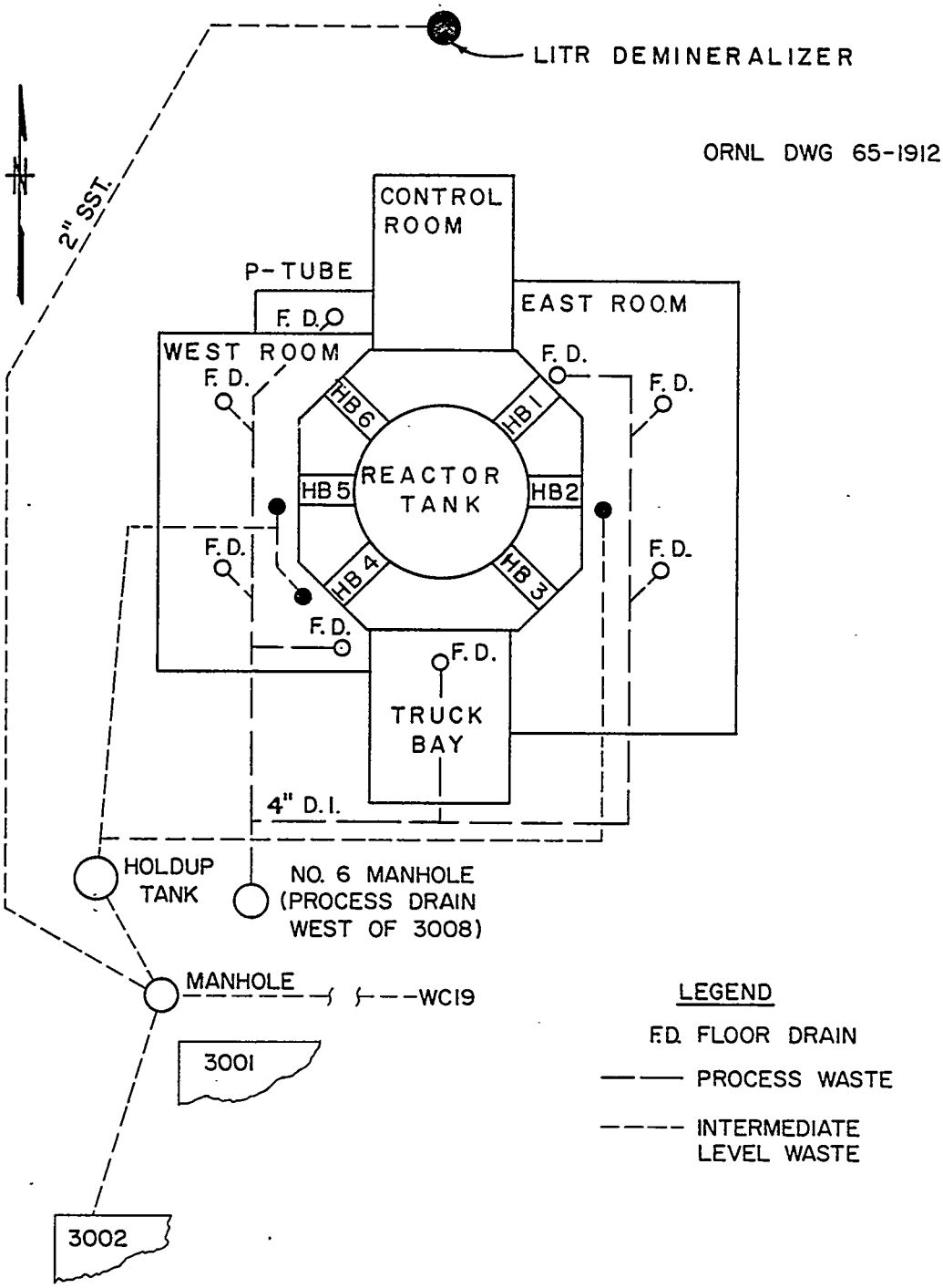

Fig. 11.3.3. Flow Diagram of the LITR Intermediate Level Waste System

12. ORGANIZATION AND ADMINISTRATION

12.1. Introduction

The LITR is under the management of the Operations Division of the Oak Ridge National Laboratory, which is operated for the U. S. Atomic Energy Commission by the Nuclear Division of the Union Carbide Corporation.

The Laboratory is one of the world's largest nuclear research centers; and, since its inception in early 1943, it has had a role in most major scientific operations and activities in the atomic energy effort. Today it is engaged in the solution of many problems of the atomic energy program, particularly those concerned with the peaceful applications of atomic energy. There are nearly 4800 employees in some 100 research groups at work in eight major fields of interest.

1. Development work in reactor technology has been undertaken on fluid-fuel reactors, on gas-cooled reactors in the civilian power reactor field, and on reactors for maritime and Army applications. In the past there was extensive work in the aircraft reactor program.
2. Development work in chemical technology seeks to improve chemical separation processes related to all phases of nuclear energy from ore processing to the purification of transuranium elements.
3. Basic research in the fields of biology, chemistry, physics, metallurgy, and health physics relates to the whole spectrum of atomic energy, but of necessity is focused on problems of current interest in research areas where ORNL is qualified and equipped to work.
4. Specialized training and education is limited to fields in which instruction is not readily available elsewhere, such as reactor operations.
5. Radiation protection through applied biology is directed toward finding better ways and means to detect radiation and radioactive materials, to evaluate the potential hazards they may introduce, and to control radiation and radioactive materials so that people will not be exposed to quantities which may produce harmful effects.

6. Research and development in the production and use of stable and radioactive isotopes seeks to cut production costs, to increase production methods, and to discover new uses for these materials.
7. Research into the controlled fusion process, and related areas, looks toward production of useful power from the fusion reaction.
8. Studies for the Department of the Interior's Office of Saline Water are in progress, involving the chemical properties of water and the technology of materials in aqueous solution.

In addition to the LITR, the Laboratory is currently responsible for the operation of seven other reactors.

The Graphite Reactor (OGR) was the first installation built at the ORNL site and was operated for 20 years. It produced the first gram quantities of plutonium and later was the principal source of radioisotopes. The reactor operated at 3.5 thermal megawatts and provided space for experiments. On November 4, 1963, operation of the Graphite Reactor was terminated.

The Oak Ridge Research Reactor (ORR) operates at 30 Mw and, as its name implies, serves as a research tool. The reactor is light-water-cooled, beryllium-reflected, and uses 93% enriched uranium fuel.

The Bulk Shielding Facility (BSF) was designed to facilitate experiments in radiation measurements in mock-ups of large reactor shields. It is now used for other research. Fueled with enriched uranium, its core is contained in a 40- x 20-ft pool of natural water and is cooled by a forced circulation system. It was the first of the swimming-pool-type reactors. The same pool also contains the Pool Critical Assembly (PCA), a 10-kw reactor of the BSF design, used primarily for student and operator training and for pretesting fuel elements for the ORR.

The High Flux Isotope Reactor (HFIR) is a beryllium-reflected, light-water-cooled and moderated, flux-trap-type reactor which uses highly enriched uranium fuel in the form of aluminum-clad plates. It first achieved criticality on August 25, 1965, and achieved its design power level of 100 Mw in September, 1966.

The Tower Shielding Facility (TSF), when in operation, is suspended from cables between four towers that stand 320 ft tall. The reactor core, containing uranium-aluminum alloy fuel elements, is housed in a

spherical tank. This unusual facility is used in research on shielding materials. Elevating the reactor avoids the confusing effects of reflection from nearby structures and from the ground. It is fueled with highly enriched ^{235}U and can be operated at thermal power levels as high as 100 kw. Originally built for work on problems associated with nuclear aircraft development, the TSF has been in operation since 1954.

The 7.5-Mw Molten-Salt Reactor Experiment (MSRE) was built to demonstrate the feasibility of long-term operation of a molten-salt fluid-fuel reactor. Extensive development work has been carried out on this molten-salt concept. Fuel for this reactor is a liquid mixture of lithium, beryllium, zirconium, thorium, and uranium fluorides. This program is an outgrowth of work performed at ORNL several years ago on aircraft propulsion.

The Health Physics Research Reactor (HPRR) provides bursts of radiation for biomedical and health physics research. An unshielded reactor, it is similar to the Godiva Reactor at Los Alamos.

Other fields of interest include the following:

Particle accelerators, sources of charged particles for nuclear research, complement the reactors. The Laboratory has both medium-energy cyclotrons and lower-energy Van de Graaff accelerators. A new Tandem Van de Graaff facility, designed to accelerate ions up to 12×10^6 ev, was completed and tested in the spring of 1962. The machine is being used for a variety of experiments in physics and chemistry to study nuclear reactions. The Oak Ridge Isochronous Cyclotron, completed early in 1962, is designed to accelerate positive ions up to 75 Mev and nitrogen ions (heavy particles) up to 100 Mev.

Radioisotopes are produced and packaged at ORNL, a principal center of research in radioactive isotopes and the largest installation of its kind in the world. The Laboratory is the site of the Isotopes Development Center, established in 1962 to broaden the technology and application of radioisotopes.

The Health Physics Division of the Laboratory pursues a broad program of research, development, and training in the handling of radioactive

materials and protection of individuals from radiation hazards. Objectives include the development of improved instruments and better methods for control and disposal of radioactive wastes.

The Biology Division of ORNL carries out the largest biomedical program under Oak Ridge Operations and one of the largest such programs in the entire AEC complex. The experimental projects are directed toward understanding the fundamental changes which occur in living material as a result of the impact of radiation. These include genetic and cytegenetic studies, studies of the basic biochemistry and physiology of cells and tissue, enzymology, radiation pathology, radiation protozoology, bacterial metabolism, cell physiology, plant physiology, nucleic acid enzymology and chemistry, and the chemical basis for radiation protection. Recent studies, undertaken with joint sponsorship of the AEC and the National Institutes of Health, seek to clarify the origins of cancer by attempting to associate chemical effects with those produced by radiation. Associated with this research is the liquid ultracentrifuge being developed with the assistance of the Oak Ridge Gaseous Diffusion Plant to separate viruses which may play a part in causing cancer.

Atomic energy education and training has been an integral part of the activities of the Laboratory since 1943, and part of the present educational program is conducted jointly with the Oak Ridge Associated Universities. This cooperative effort provides an opportunity for university faculty members to engage in advanced research at ORNL and graduate students to complete thesis research toward masters or doctoral degrees at the Laboratory through AEC fellowships and other arrangements.

The Controlled Thermonuclear Program is a major research effort at the Laboratory to harness the power of the fusion reaction, with additional facilities available for study of the basic phenomena of plasmas.

12.2. Organization

The Oak Ridge National Laboratory is organized into 27 line divisions. In addition, there are several staff organizations which have a significant responsibility with respect to reactor operations. A general organization chart of the Laboratory is shown in Fig. 12.2.1.

Operation of the LITR is the direct responsibility of the Operations Division, which is also responsible for the High Flux Isotope Reactor (HFIR), the Oak Ridge Research Reactor (ORR), the Bulk Shielding Reactor (BSR), the Pool Critical Assembly (PCA), and the Graphite Reactor (OGR) which is now shut down. The Operations Division is organized into three line and two staff departments as shown in Fig. 12.2.2.

In addition to the Operations Division personnel, who perform day-to-day operation of five reactors and provide technical assistance, the services of members of three other divisions are required. These are the Plant and Equipment Division, which supplies mechanical and electrical maintenance services; the Instrumentation and Controls Division, which is responsible not only for the routine maintenance of the control and process instrumentation, but also participates in the development of improved equipment; and the Health Physics Division, which furnishes radiation monitoring service on a routine basis. In each case a craftsman or a group of craftsmen and a supervisor are assigned to the Operations Division. These service department supervisors work in close cooperation with the superintendent of the Reactor Operations Department and the various reactor supervisors who are directly responsible for operations. In practice, a small, highly trained group is always available; and, when needed, additional personnel are made available from the parent organizations.

The organization is shown in Fig. 12.2.3. The normal paths of communication with the LITR groups are indicated by dotted lines.

The personnel[1] of the Operations Division who are concerned with reactor operations may be divided broadly into three categories.

---

[1] F. T. Binford, "Training Programs for Reactor Operations and Reactor Hazards Evaluation at ORNL", Proceedings of Symposium on the Programming and Utilization of Research Reactors Held in Vienna, Austria, Academic Press, New York, 1962.

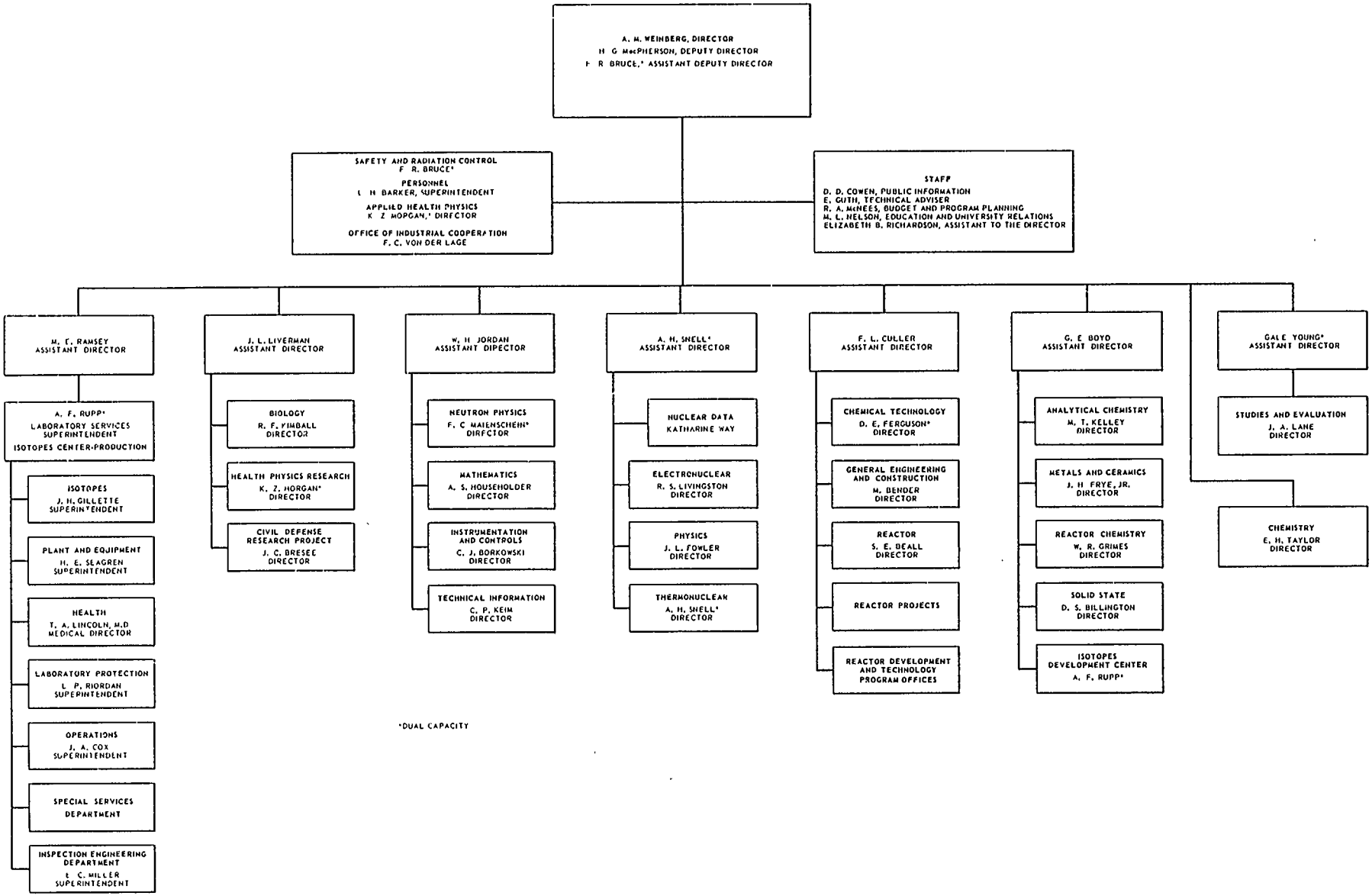

Fig. 12.2.1. ORNL Organization Chart

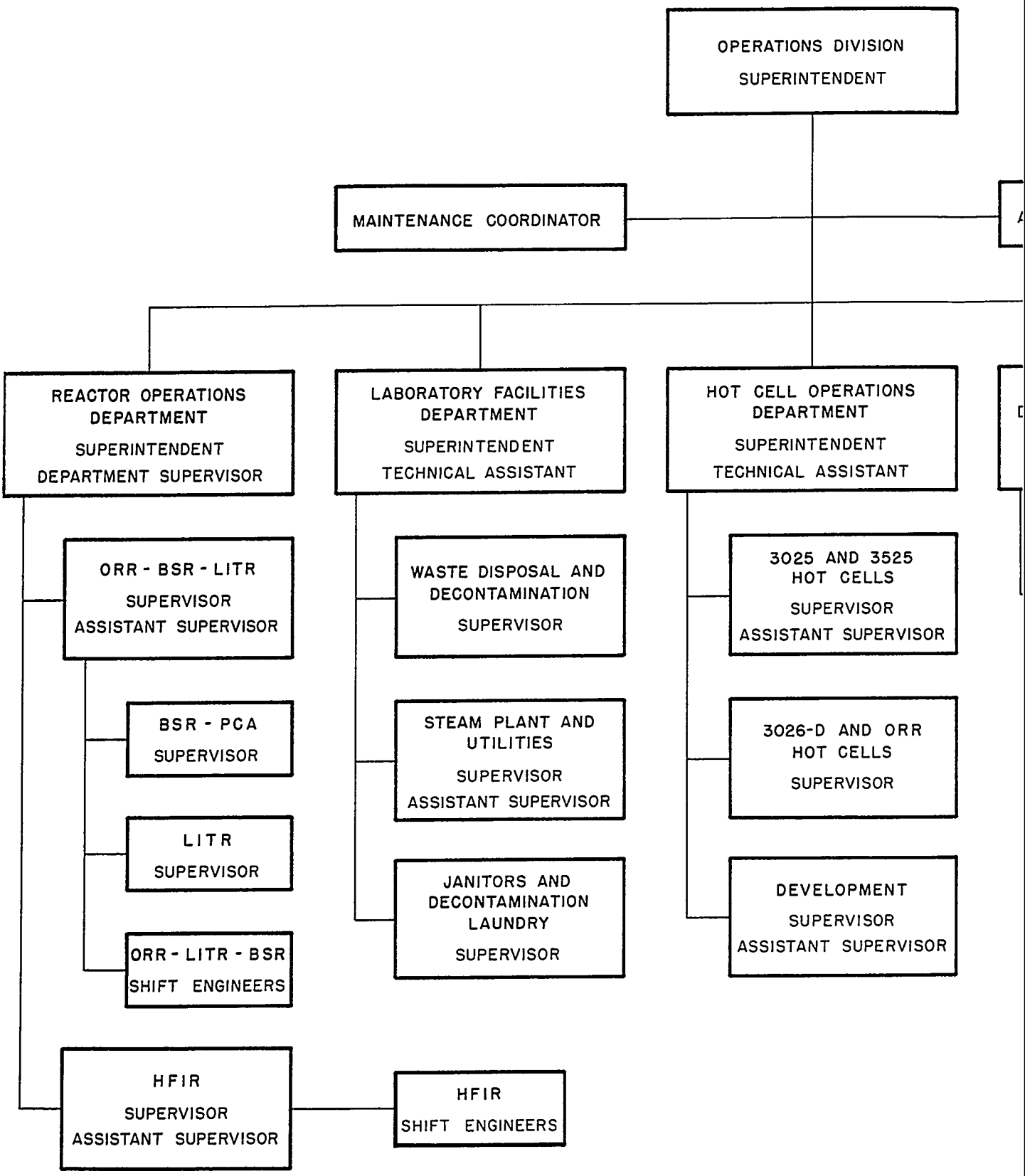

Fig. 12.2.2. Operations Division Organizatio

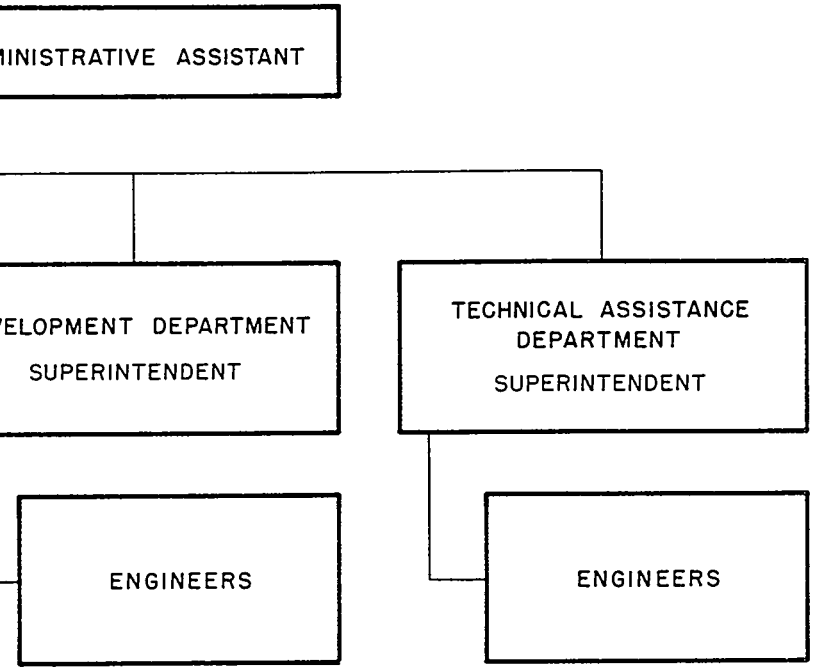
MINISTRATIVE ASSISTANT
VELOPMENT DEPARTMENT
SUPERINTENDENT
TECHNICAL ASSISTANCE
DEPARTMENT
SUPERINTENDENT
ENGINEERS
ENGINEERS

Chart

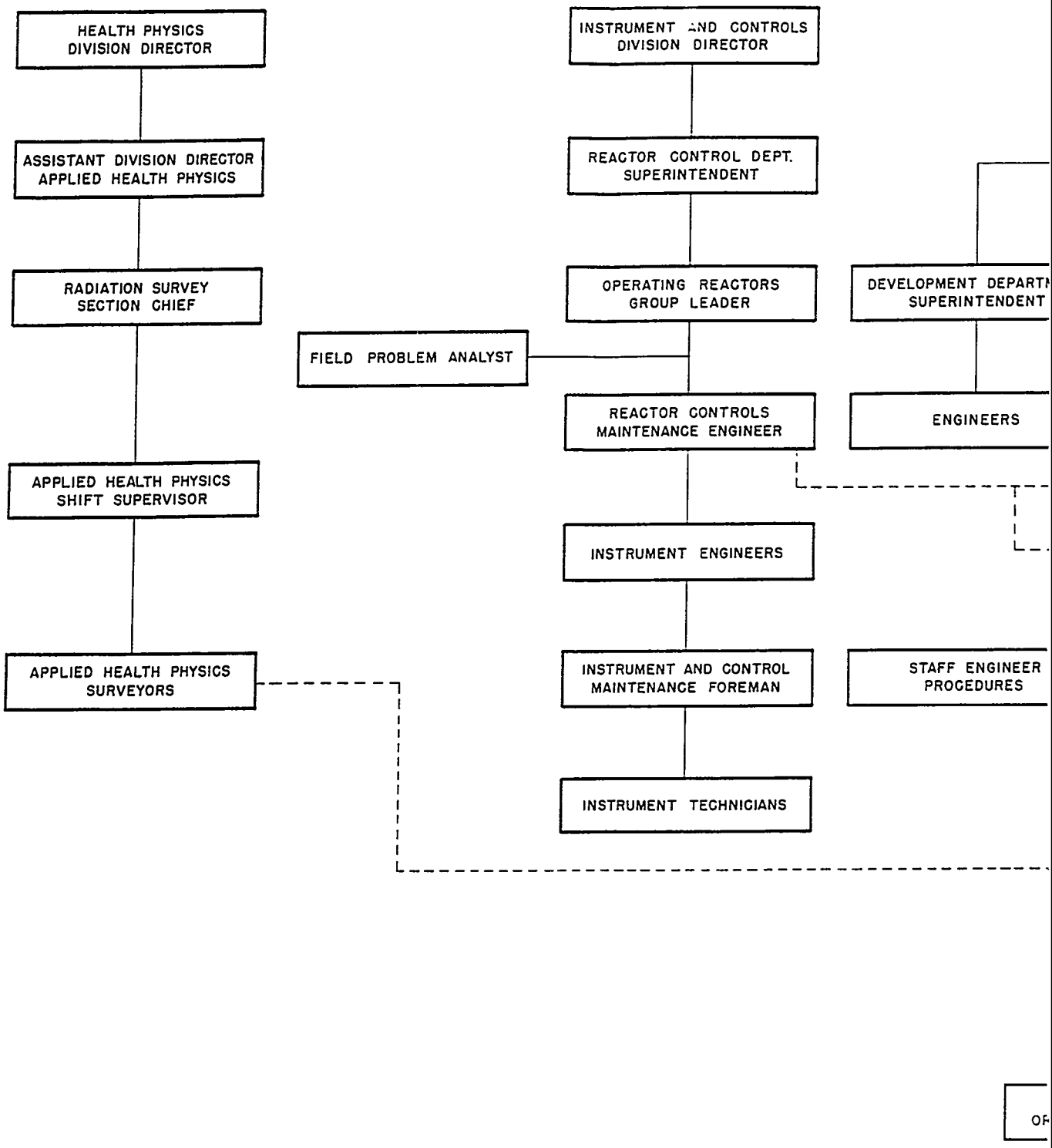

Fig. 12.2.3. Commun

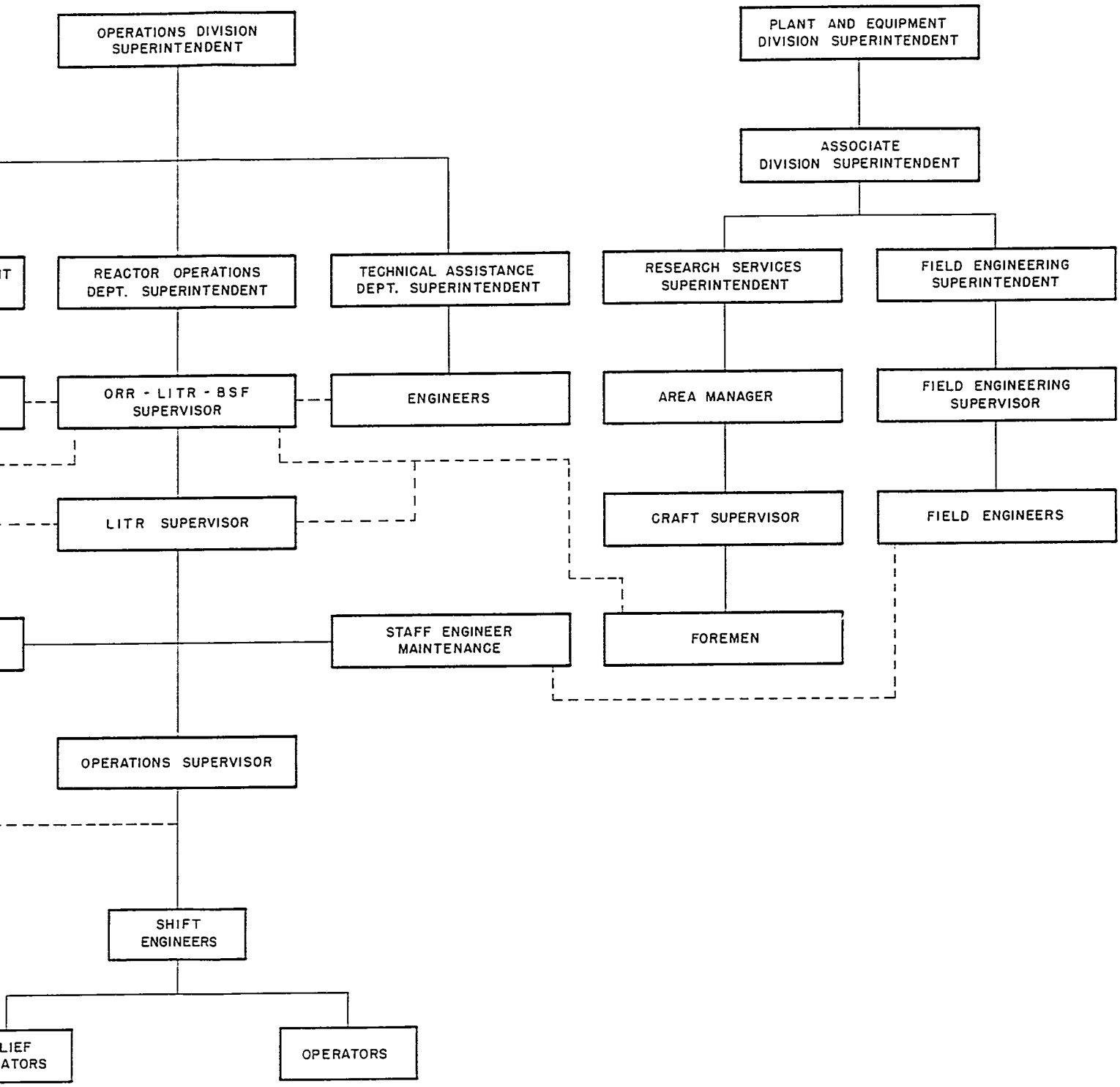

ation Paths for LITR Management

The nuclear reactor engineer possesses a high degree of technical competence and knowledge including the ability to analyze and treat the various aspects of reactor technology. He has a thorough working knowledge of the physical principles associated with the design and operation of a nuclear reactor and its ancillary facilities. His educational background includes an undergraduate degree in engineering or one of the physical sciences plus considerable specialized work in reactor technology. The senior reactor supervision and technical support personnel of the division fall into this category.

The operation engineer is distinguished from the nuclear engineer in that the former is generally charged with the direct responsibility of supervising the implementation of procedures established by the latter. The training of the operation engineer emphasizes familiarity with the reactor and other devices under his control and their behavior and, in particular, their limitations. The shift engineers are included in this classification. Usually, they are required to have an undergraduate degree in engineering and some specialized training, often acquired on the job, in nuclear engineering.

The reactor operators are the individuals who, under the supervision of reactor engineers or the operating engineers, perform the actual manipulations required to operate the facility. In general, these persons are trained on the job to perform essentially repetitive tasks. They are required to be emotionally stable, manually dexterous, and have good intelligence. The educational requirement is a high school diploma or the equivalent.

12.3. Training and Qualification of Reactor Operations Department Personnel

Most of the engineers currently employed by the department have undergraduate degrees in engineering or in one of the physical sciences. Those who do not have degrees have the equivalent in experience.

New personnel hired for the Reactor Operations Department are subjected to an intensive course of instruction. This program consists of a series of on-the-job sessions in which the trainee is taught by an

experienced engineer to do each of the tasks required of him. He is then permitted to perform these tasks under the supervision of experienced personnel until he is judged competent to handle them independently. In addition, lectures on various pertinent topics are given and reading material is assigned. The subject matter is essentially the same for both engineers and operators but is presented to the engineers on a considerably more advanced level. In the case of the operators, the initial educational work is begun during the three months' probationary period. It is somewhat more extended in the case of the operating engineer; he is expected to supplement his knowledge with independent study. Upon completion of training, both the engineers and the operators satisfy the requirement of AEC Manual Chapter 8401 and 10 CFR Part 55.

By the end of three months, the operator should be qualified to perform routine duties. Training after the first three months is less intensive but continues until the operator is able to carry out his tasks independently in a competent manner.

Training of the operating engineer takes somewhat longer; generally, at least six months is required before he is given independent responsibility. This is because, in addition to being familiar with the operator's job, he must also be thoroughly acquainted with the mechanical characteristics of the reactor, its control circuits, and its behavior under all conditions. Furthermore, he must understand company policy and fulfill his position as a management representative.

An an aid to the trainees, a manual of programmed instruction has been prepared which covers information concerning the reactors. The trainee is expected to be thoroughly familiar with this material at the completion of his training period. For supervisors, additional information on a higher technical level is taught; also, administration and company policy are covered more thoroughly. At the end of the training period, written and oral examinations similar to those specified for licensed operators in 10 CFR Part 55 are given to determine if the trainee is qualified to take the position for which he was trained, either reactor operator or senior reactor operator.

The senior supervisory personnel usually are drawn from the ranks of the shift engineers. The normal route is for a shift engineer to progress to day work where he is given increasing administrative responsibility and additional on-the-job training.

12.4. Technical Support Organizations

Two staff organizations are available in the division to provide technical support for the operating department--the Development Department and the Technical Assistance Department.

The Development Department consists of a group of six reactor engineers who are responsible for long-range improvements in operating techniques and safety. The personnel of this group are all graduate engineers with either long experience in the reactor engineering field, ORSORT training, or both. The department is available for consultation and assistance at all times and handles such matters as heat-transfer, criticality, and shielding calculations. It also assists in the development and assessment of operating procedures and is responsible for many technical details concerning operation.

The Technical Assistance Department also consists of a group of six reactor engineers having qualifications similar to those in the Development Department. One of the primary functions of this group is the evaluation of in-reactor experiments from the standpoint of personnel safety and operational compatibility. The Technical Assistance Department, like the Development Department, is always available for advice and consultation on safety and operation and participates in some development projetcs but, in general, restricts itself to day-to-day routine technical matters.

In addition to these staff organizations, the division has available, upon request, the services of the entire Oak Ridge National Laboratory for assistance and consultation if the need arises. Among the divisions most often called upon for advice, with respect to reactor engineering, experiment design, reactor safety, and other matters pertaining to operations, are the following with which close contact is maintained and which are listed together with a brief resume of their primary functions.

The Plant and Equipment Division maintains a staff of engineers with shop and maintenance personnel well qualified to fabricate and maintain mechanical components for nuclear research reactors and associated facilities. Also, their field engineers assist in analyzing problems and in designing and developing equipment for solving these problems.

The Reactor Controls Department of the Instrumentation and Controls Division was established to support the Laboratory's reactor development and reactor operations programs. The department, consisting of approximately 50 physicists, engineers, and technicians, includes groups attached to the various reactor projects and engaged in the design of reactor control and safety systems, a development group employing advanced techniques in devising improved control systems and components, an analytical group which maintains an analog computing facility for the solution of reactor dynamic and kinetic problems, and an operations group which is responsible for the maintenance and related activities in the Laboratory's research and experimental reactors.

The General Engineering Division is responsible to Laboratory management for all design and construction activities associated with the Laboratory's facilities. These activities normally include studies, conceptual design, criteria preparation, final design, architect-engineer review, cost estimating, critical path scheduling, construction administration, inspection, etc., all of which routinely require the services of experienced engineering and drafting personnel in all of the disciplines; i.e., civil, structural, mechanical, chemical, and electrical engineering. Projects range from conventional laboratory and office space to the most advanced concepts in power and research reactors, remotely operated testing and separations facilities, and accelerator and other basic research facilities. In addition to personnel for normal design and construction activities, specialists are also available to provide design assistance on special problems such as: mechanical and thermal stress calculations, code calculations, pressure-drop calculations, heat transfer calculations, radiation intensity and shielding calculations, etc.

The Neutron Physics Division is responsible for the operation of the Tower Shielding Reactor, the Health Physics Research Reactor, and the Critical Experiments Facility. The division performs studies supporting the design and modification of reactors and is, therefore, qualified to analyze any irregular reactor behavior. Studies are performed to assist in the design of shields for reactors, both stationary and mobile, for high-energy accelerators, and for space vehicles. The division also performs "in-the-field" leakage-radiation measurements for operating reactors; maintains a Radiation Shielding Information Center for reactor, weapons, and high-energy radiations; conducts a basic reactor physics program which yields neutron cross-sections needed for reactor and shielding calculations; studies neutron diffusion in moderating materials; and conducts a program to measure neutron and gamma-ray spectra.

The Solid State Division concerns itself in large measure with a study of radiation damage in all types of solids and has developed considerable skill in the design, construction, and operation of "in-reactor" facilities. These skills have been augmented by practical knowledge of handling radioactive material, including the measurement of many physical properties on irradiated material. The division has specialists in many areas of solid state in addition to the above; for example, magnetism, low temperature, superconductivity, crystal growth, X-ray and electron microscope, transistors, surfaces, elastic constants, mechanical properties, neutron diffraction, thermal and electrical conductivity, brittle fracture, creep internal friction, reactor physics, and solid-state theory in general.

The Inspection Engineering Department is responsible to ORNL management for the pressure-containing adequacy of components in reactor, radiochemical and nonnuclear systems; conducts engineering reviews of drawings and specifications to determine compliance with specifications and established codes or code-equivalents and for additional ORNL safety responsibilities where existing standards are inadequate or insufficient; establishes inspection requirements and schedules to insure adequate periodic inspection of operating equipment and arranges periodic retesting as required; provides and trains the personnel to inspect such equipment to

insure compliance with code, code-equivalent and extracode requirements; witnesses or performs such inspections, initially and periodically, under professional engineering supervision; reports any failures to comply with established procedures to management; prepares and maintains inspection records for pressure-containing equipment in ORNL; recommends repairs and reinspects after repair; estimates and recommends retirement dates for deteriorated equipment; and provides periodic inspections and in situ tests of high-efficiency filter systems, including the development of filter testing methods and the provision of engineering consultation in connection with their application. Members of the department's professional engineering staff are active participants in national nuclear standards-writing activities and are aware of the requirements, adequacy, and shortcomings of the applicable codes.

The Reactor Chemistry Division is responsible for chemical support to all ORNL reactor development programs; carries out a large research program devoted to chemical aspects of nuclear safety, including the consequences of deliberate and accidental melting of reactor fuel elements, the innocuous simulation of reactor accidents, the development of techniques for removing particulate material and iodine from gas streams, and on-site testing of filters for decontamination of reactor effluent gases; furnishes background information on the behavior of high-temperature aqueous systems since it includes most of the chemists formerly engaged in chemical studies of the aqueous homogeneous reactor program; furnishes information and does special studies on the corrosion of aluminum and other reactor construction materials, both in the presence and in the absence of mixed reactor radiations and fissioning uranium; studies the chemistry of water-cooled reactors and the development of techniques for removal of radioactive corrosion products and fission products from primary reactor coolant streams; and supplies expert personnel and facilities for the identification of particulate material or other solids requiring such analyses.

The Health Physics Division is responsible for personnel monitoring and maintaining personnel exposure records; it is responsible for radiation monitoring of all operations, routine and experimental; it is

responsible for radiation monitoring in the environs; provides round-the-clock surveillance of radiation exposure conditions and of environmental contamination; reviews sections of Standard Operating Procedures relating to hazards control and advises all divisions on the safe conduct of their operations; participates in the radiation experiment design, management of wastes, and emergency planning; cooperates in radiation safety training programs in all divisions and conducts health physics training for outside groups as required; and participates in graduate education of health physics specialists at Vanderbilt University and The University of Tennessee. Research conducted by the Division embraces many direct and indirect problems of radiation measurement, dose measurement and estimation, radiation effects, and environmental effects.

The Chemical Technology Division is engaged in the development of the separations processes including the safety aspects of radiochemical plant design and operation; has primary responsibility, with the Metals and Ceramics Division, for the Transuranium Processing Facility which will prepare and process the HFIR irradiation targets; is engaged in the development of waste disposal technology for highly radioactive liquid waste effluents; builds and operates radiochemical pilot plants; and operates hot cells for chemical separations development work.

The Metals and Ceramics Division carries out a broad program of research and development on metallic and ceramic materials, with emphasis on those materials used in nuclear reactors. The division is well equipped and experienced in providing support to a wide variety of reactor projects in the areas of materials evaluation and selection, component fabrication, testing before and after service, and failure analysis. A continuing program is maintained for the development of advanced fuel and control elements. The division has had a major role in fuel development for many reactors, particularly those requiring significant advancement in the technology of aluminum-base fuels, from the pioneering MTR through the HFIR. Many types of fuel and control elements can be fabricated on both developmental and limited-production bases. Capabilities include traditional and advanced techniques for melting and casting, powder metallurgy, ceramic fabrication, extrusion, rolling, and welding and brazing.

For the examination and evaluation of materials and components, including those that are highly radioactive and require remote techniques, the division can apply new and established techniques in metallography, mechanical properties, corrosion, X-ray diffraction, nondestructive testing, and other specialties. Constant cognizance and, in many cases, liaison are maintained with the major reactor projects of the free world.

The Analytical Chemistry Division is responsible for performing the chemical analyses required in the various programs of the Laboratory. A large part of such requirements originates in various phases of reactor programs, particularly in metallurgical and chemical studies for reactors, in chemical processing studies, and in isotope research and production. In support of this function, the division is responsible for developing the analytical methods required to perform these analyses. In addition, the division is responsible for carrying out research programs in the field of analytical chemistry as designated by the Atomic Energy Commission.

The Reactor Division is a group of over 300 scientists, engineers, technicians, and design draftsmen with special skills and experience in the design, evaluation, development, and operation of several types of advanced nuclear reactors, including graphite-moderated, natural-uranium; pressurized water; aqueous-homogeneous; molten-salt; and gas-cooled, uranium-oxide. In the course of reactor development at ORNL, the Reactor Division has developed facilities and has accumulated equipment for handling a wide range of reactor engineering problems.

12.5. Method of Operation

As is the case with the other reactors operated by the Operations Division, the LITR is operated through the use of written standard procedures. These procedures are designed to insure that the operation of the reactor is carried out in a safe, well-regulated manner. The operating procedures describe in detail the steps required for all routine operations and for as many nonroutine operations as can be anticipated.

In addition to the step-by-step details, the procedures supply information concerning the need for the particular method of operation, special hazards which may be encountered, and references to various types of descriptive material such as blueprints or component operating manuals.

The operating procedures are written by Operations Division personnel and are carefully reviewed by senior staff members of the division. All procedures are numbered and maintained in books or procedure manuals for ready reference by the operating personnel. As procedure revisions become desirable, or as the necessity for new procedures arises, these are prepared and, after review and acceptance by appropriately designated specialists and by the Superintendent of the Reactor Operations Department, are then made part of the procedure manual.

In some cases, where the operation is quite complex or where errors cannot be tolerated, the procedure is supplemented by a checklist. Most of these checklists are to be completed by the operator and reviewed by the shift engineer. In some instances, however, the shift engineer himself is required to complete the checklist. A few examples of the operations requiring checklists are reactor startup, reactor shutdown, daily shift checks, and certain major maintenance operations.

At times, temporary procedures are required when nonroutine operations or experiments are performed with the reactor. Such procedures are prepared in advance and approved. During shutdowns many operations may be performed; and in such cases, a special temporary procedure is written in advance to insure that no work is forgotten and that all standard procedures are followed before the reactor is again started up.

Emergency procedures are provided for those types of malfunctions which can be anticipated. These include procedures outlining methods for coping with contamination or radiation incidents and fires. In addition, procedures for handling such emergencies as loss of electrical power, loss of ventilation, and instrument malfunction, among others, are prepared. Closely associated with this is the Laboratory-wide emergency plan which details the actions to be taken in case of a serious emergency.

Communication from shift to shift is accomplished by means of the LITR log book in which the details of the work of the shift are recorded and which is, therefore, a minute history of the operation. In general, the information contained in the log book can be summarized under the following headings:

1. Operations
2. Shutdowns
3. Trouble
4. Routine checks
5. Maintenance
6. Service to research
7. Sample irradiations
8. Miscellaneous

The strip charts from the various reactor instruments serve to supplement this information.

In cases where it is practical, procedures are written to describe the various maintenance operations. In critical cases, instrument test procedures are supplemented by the use of checklists which may be considered parts of the operating procedures. This is particularly true for the routine maintenance of the instruments and controls and for the routine lubrication and maintenance of mechanical equipment.

An IBM-card system is used to keep abreast of routine mechanical maintenance and the stocking of spare parts.

12.6. Internal Safety Reviews

Aside from the interdepartmental safety reviews implied in the method of operation described above, the Laboratory maintains a number of standing review committees which report to the Laboratory Director and whose functions are to provide internal safety surveillance independent of the various operating and research divisions.[2] These committees are composed of senior members of the ORNL staff selected for their competence in particular fields, but in general, not directly associated with the projects they review. Of these committees, three are concerned with the operation of the LITR.

---

[2] Francois Kertesz, The Auditing of Reactor Safety at the Oak Ridge National Laboratory, ORNL-TM-612 (July 8, 1963).

The Reactor Operations Review Committee reviews, annually, operation of all ORNL reactors including such data as power levels, shutdown experience, and, in particular, an analysis of unusual occurrences. Consideration is given by the committee to the condition of the operating procedures, maintenance program, personnel changes, and reactor mechanical details which could affect the reactor shutdown margin. In connection with these reviews, the committee conducts inspections of the reactor. During these inspections, a special point is made to observe reactor startup and shutdown procedures in action and to scrutinize the log book and other procedural material. At the time of the formal review, the committee may question the operating group concerning any of the items observed during the inspection or otherwise brought to their attention. As a result of this review, specific recommendations are made to the Laboratory management by the committee concerning continued operation of the reactor. In addition to this annual review function, concurrence of the Reactor Operations Review Committee is required before any changes are made in reactor operation which may have a significant adverse effect on safety.

The Reactor Experiment Review Committee reviews (from the standpoint of personnel and equipment safety and that of insuring continuity of operations) any new or unusual experiment rigs proposed for insertion into the reactor. Experiments proposed for the reactor are first carefully examined for safety by the Technical Assistance Department of the Operations Division.[3] It is attempted at this level to resolve any problems regarding safety and to produce a design which meets the necessary requirements. Once agreement has been reached, the experiment may be approved for insertion into the reactor by the Technical Assistance Department. If any significant hazard existed, even though it had been corrected by design, the experiment is submitted with appropriate recommendations to the Experiment Review Committee for further review. When the committee concurs that the experiment is safe, the experiment may be inserted into the reactor. The committee may make recommendations

[3] C. D. Cable, General Standards Guide for Experiments in ORNL Research Reactors, ORNL-TM-281 (August 20, 1962).

and conditions on design and operation of the experiment. In addition to examining new experiments, the committee periodically reviews all the experiments in the reactor to insure that they are being handled according to its recommendations. The committee also has the prerogative of overriding the approval of the Technical Assistance Department and requiring additional review of any experiment if it deems this necessary.

The Criticality Review Committee has jurisdiction over operations which involve the handling, storage, and transportation of significant quantities of fissionable material. Reactor fuel within a reactor core is specifically exempted from this; however, procedures for handling fuel before insertion and after removal must be approved by this committee. The committee acts in many respects as a consulting group and gives assistance in problems involving criticality. It also conducts an annual review of each facility to insure that approved procedures are being followed.

Finally, the Laboratory has established, as a staff function of the Director's office, a Safety and Radiation Control Department. This organization establishes, on behalf of Laboratory management, policy with respect to radiation protection and ascertains that this policy is met at all times. It promulgates criteria and serves a liaison function between the various Laboratory divisions. Staff members of the Safety and Radiation Control Department are assigned responsibilities for following closely the activities of those Laboratory divisions which handle significant quanties of radioactive materials. Specialists in key elements of the radiation program, such as containment, waste disposal, criticality, reactor safety, etc., are on the staff of the Director of Safety and Radiation Control.

DISTRIBUTION

1-3. R. G. Affel
4. S. E. Beall
5. F. T. Binford
6. F. R. Bruce
7. C. D. Cagle
8. W. R. Casto
9. E. S. Collins
10. R. A. Costner, Jr.
11-30. J. A. Cox
31. E. N. Cramer
32. W. H. Culbert
33. G. J. Dixon
34. C. B. Gaither
35. L. A. Haack
36. T. P. Hamrick
37. S. S. Hurt, III
38. F. B. K. Kam
39. E. M. King
40. H. V. Klaus
41. E. D. Lance
42. H. G. MacPherson
43. R. V. McCord
44. J. M. Miller
45. R. G. Orrison
46. M. E. Ramsey
47. R. J. Robson
48-62. H. M. Roth, AEC
63. A. F. Rupp
64. E. G. Silver
65. T. M. Sims
66. L. E. Stanford
67. J. H. Swanks
68. W. H. Tabor
69. J. R. Thomas
70. C. C. Webster
71. A. M. Weinberg
72. R. C. Weir
73. K. W. West
74. E. J. Witkowski
75-76. Central Research Library
77. Document Reference Section
78-80. Laboratory Records Department
81. Laboratory Records, ORNL R.C.
82-96. Division of Technical Information Extension
97. ORNL Patent Office