SECRET
SECURITY INFORMATION

This document consists of 415 pages.
No. 29 of 114 copies, Series TA

ORNL
MASTER COPY

UNITED STATES ATOMIC ENERGY COMMISSION

ORNL-1534

HRE DESIGN MANUAL

By
C. L. Segaser
F. C. Zapp

DECLASSIFIED

Per Letter Instructions Of
AEC 2-6-57
M Shirley
For: A. T. Gray, Supervisor
Laboratory Records Dept.
ORNL

November 18, 1952
[Site Issuance Date]

Oak Ridge National Laboratory

Technical Information Service, Oak Ridge, Tennessee

ChemRisk Document No. 663

CLASSIFICATION CANCELLED
DATE JUL 12 1979 (DOE Review Order)
DECLASSIFICATION OFFICER
OAK RIDGE NATIONAL LABORATORY
AUTHORITY DELEGATED BY ERDA. 8-15-77

Publicly Releasable

This document has received the necessary patent and technical information reviews and can be distributed without limitation.

SECRET
SECURITY INFORMATION

[redacted]

In the interest of economy, this report has been reproduced direct from copy as submitted to the Technical Information Service.

Other issues of this report may bear the number CF-52-6-160.

Work performed under
Contract No. W-7405-eng-26.

[redacted]

AEC, Oak Ridge, Tenn.-W32340

ACKNOWLEDGMENT

Acknowledgment is hereby gratefully extended to the many groups and persons who have contributed to the design of the HRE. For the past two years, during which the bulk of the design and construction of the HRE has been completed, the HRP organization has become so large that individual recognition of each participant is not possible. However, the HRE design section is particularly grateful for the engineering and drafting aid of the ORNL Engineering and Maintenance Section and for experimental data furnished by the Experimental Engineering Group on which the design of many components of the HRE is based.

TABLE OF CONTENTS

		Page
CHAP. 1.	INTRODUCTION	1
1.1	Purpose of Reactor	1
1.2	Design Criterion for HRE	1
1.3	Advantages and Disadvantages of Homogeneous Systems	3
1.4	Brief General Description of the HRE	4
1.5	Location	9
1.6	Availability of Utilities	9
CHAP. 2.	ENGINEERING DESCRIPTION OF THE HRE	10
2.1	The High Pressure Soup System	10
2.1.1	General Description of System Design	10
2.1.2a	The Reactor Core (Item 1)	15
b	The Reactor Core Neck Assembly	18
2.1.3a	The Circulating Pump (Item 4)	22
b	Soup Pump Oil Cooling System (Item 5)	27
2.1.4	The Main Heat Exchanger (Item 3)	28
2.1.5	Soup Return Feed Pump (Item 6)	36
2.1.6	Circulating Pump Purge System (Item 92)	40
2.1.7	Oxygen Metering System and Surge Tank (Item 98)	44
2.1.8	Pressurizer (Item 2)	47
2.1.9	Let-down Heat Exchanger (Item 12)	49
2.2	The Low Pressure Soup System	51
2.2.1	General Description of System Design	51
2.2.2	Inner Soup Dump Tanks (Item 10 a and b)	58
	a) Liquid Gas Separator (Item 91)	61
	b) Soup Evaporator (Item 9)	62
2.2.3	Soup Filter (Item 8)	63
2.2.4	Soup Cooler (Item 7)	63
2.2.5	Outer Soup Dump Tanks (Items 64 a and b)	65
	a) Condenser (Item 68)	67
	b) Outer Dump Tank Valve Pit	68
2.2.6	Soup Gas Condenser (Item 14)	70
	a) Filter to Purge Pump (Item 99)	72
2.2.7	Condensate Tanks (Items 11 a and b)	73
2.2.8	Steamers (Items 93 a and b)	74
2.2.9	Soup Off-Gas Flame Recombiner (Item 13)	76
2.2.10	Soup Off-Gas Catalytic Recombiner (Item 88)	80
2.2.11	Soup Off-Gas Condenser (Item 15)	82
2.2.12	Soup Off-Gas Cold Traps (Items 89 a and b)	83
2.2.13	Soup Off-Gas Charcoal Adsorbers (Items 16 a and b)	83

Page

2.3 The High Pressure Reflector System 88

2.3.1 General Description of System Design 88
2.3.2 Reflector Vessel (Item 18) 92
2.3.3 Reflector (D_2O) Cooler (Item 20) 96
2.3.4 Reflector Circulating Pump (Items 19 and 21) 99
2.3.5 Reflector Off-Gas Recombiner Loop (Items 96 and 97) 102

2.4 The Low Pressure Reflector System 104

2.4.1 General Description of System Design 104
2.4.2 Reflector Dump Valve 106
2.4.3 Reflector Dump Tanks (Item 23 and 22) 107
2.4.4 Reflector Evaporator (Item 24) 110
2.4.5 D_2O Gas Condensers (Item 28 a, b and c) 111
2.4.6 D_2O Catalytic Recombiner (Item 27) 113
2.4.7 D_2O Off-Gas Condenser (Item 86) 115
2.4.8 Cold Traps (Item 84 a and b) 116
2.4.9 D_2O Charcoal Adsorber (Item 30) 116
2.4.10 D_2O Filter (Item 25) 117
2.4.11 D_2O Feed Pumps (Item 26 a, b and c) 118

2.5 The Power System 120

2.5.1 General Description of System Design 120
a) General 120
b) Power Cycle 121
c) Normal Operation 124
d) Instrumentation and Safety 131
e) Radioactivity of Steam 131
f) System Pipe Layout 132
1) Thermal Stress Analysis 132
2) Hanging and Anchoring 134
2.5.2 Turbine Generator Set (Item 40 and 41) 135
2.5.3 Steam Condenser (Item 42) 144
2.5.4 Non-condensible Gas Pump (Item 67) 150
2.5.5 Boiler Feed-Water Pumps (Items 45 and 65) 151
2.5.6 Auxiliary Equipment in Power System (Items 39, 44, 58, 59 and 63) 155

2.6 The Emergency Cooling Water System 164

2.6.1 Purpose and General Description 164
2.6.2 Basis of Design 166

2.7 The Helium Pressurizer System 167

2.7.1 General Description of System Design 168
2.7.2 Helium Cylinder Stations (Item 31) 168
2.7.3 Silica-gel Adsorbers (Item 32 a and b) 169

		Page
2.8	The Refrigeration System (Item 84, 85 and 89)	169
2.9	Leak Detector Systems	172
	2.9.1 Heat Exchanger Leak Detector	172
	2.9.2 High Pressure Soup System Leak Detector	173
	2.9.3 High Pressure D_2O System Leak Detector	174
	2.9.4 Valve Leak Detector System	174
2.10	Handling Tools and General Accessibility of Equipment	176
2.11	Auxiliary Supporting Systems to Reactor	184
	2.11.1 Process Steam System	184
	2.11.2 Electrical Power and Light System	185
	2.11.3 Process Water System	187
2.12	The Waste Recovery System	190
	2.12.1 General Discussion	190
	2.12.2 Waste Evaporator	190
2.13	The Decontamination System	191
CHAP. 3.	THE HRE SHIELD DESIGN	193
3.1	Purposes of the HRE Shield	193
3.2	General Description of Shielding Structure	193
3.3	Concrete Block Specifications	196
3.4	Radiation Sources	196
3.5	Estimated Radiation Dosage at Shield Surface	[illegible]
3.6	Induced Activities in Equipment Items	199
3.7	Heat Generation and Temperature Distribution	214
3.8	HRE Shield Cooling System	215
CHAP. 4.	THE HRE CONTROL PLATE SYSTEM	221
4.1	Purpose of Control Plates	221

Page

4.2 General Discussion of the Design of the Control Plates 221

4.3 Detailed Design Description of the Control Plates by Sub-Assemblies 225

4.4 A Discussion of Some of the Difficulties Encountered in Testing the Operation of the Safety Rod 241

4.5 Effectiveness of HRE Control Plates 244

4.6 Heat Generation in the HRE Control Plates 245

4.7 Nuclear Instrumentation Thimbles 245

CHAP. 5. SAMPLING PROCEDURES IN THE HRE 247

5.1 General Discussion of Sampling Requirements 247

5.2 High Pressure Soup System Sampling Apparatus 248

5.3 Reflector Sampling System 258

5.4 Off-Gas Samplers 262

5.5 Chemistry Laboratory Sampling Apparatus 263

CHAP. 6. EXPERIMENTAL FACILITIES IN THE HRE 267

6.1 General Discussion of HRE as an Experiment 267

6.2 Instrument Holes, Plugs and Thimbles 268

6.3 Corrosion Study Facilities 272

CHAP. 7. SAFETY ASPECTS INHERENT IN DESIGN OF HRE 275

7.1 General Discussion of Inherent Stability of the HRE 275

7.2 Controls and Interlocks (Discussed in ORNL-1094) 275

7.3 Locations, Design Pressures and Venting of Rupture Discs and Safety Valves in the HRE 276

APPENDIX	A	HRE Drawing Lists	279
	B	Flowsheet Line Schedule	307
	C	Flowsheet Identification Code	356
	D	Insulation Schedule	357
	E	Nuclear Constants of the HRE	365
	F	Stainless Steel Welding Specifications	369
	G	HRE Building and Site Plan - Brief With Reference to HRE Building Specifications	370
	H	Control Valve Schedule	371
	J	Reference Reports	374

LIST OF FIGURES

Figure No.	Title	Page
1.1A	General Flowsheet	6
1.1B	Pictorial Layout of the HRE	7
1.1C	Pictorial Layout of Core Tank and Top Flange	8
2.1.1A	High Pressure Soup System Flowsheet	11
2.1.1B	Soup Cell Piping - Sectional Elevations	12
2.1.1C	Soup Cell Piping - Plan and Horizontal Sections	13
2.1.1D	Reactor Cell - Equipment and Piping	14
2.1.2A	Core Tank Assembly	19
2.1.3A	Modified Model 100-A Soup Pump	23
2.1.3B	Performance Curves - Model 100-A Pump	26
2.1.4A	Main Heat Exchanger	29
2.1.4B	Heat Exchanger Cell	30
2.2.1A	Low Pressure Soup System Flowsheet	52
2.2.1B	Soup Dump Tanks - Layout	53
2.2.1C	Bellows Valve Operator	54
2.3.1A	High Pressure Reflector System Flowsheet	89
2.3.1B	Pictorial Layout of Reflector Cell	90
2.3.1C	Layout of Reflector System Cell	91
2.3.4A	Model 30-A Reflector Pump	100
2.3.4B	Performance Curves - Model 30-A Pump	101
2.4.1A	Low Pressure Reflector System Flowsheet	105
2.5.1A	H.R.E. Power Cycle	122
2.5.1B	H.R.E. Power Cycle - Operating at 1000 KW Power Level	123

[redacted]

Figure No.	Title	Page
2.5.1C	Power System Flowsheet	125
2.5.1D	Turbine - Generator - Condenser Layout Plan	126
2.5.1E	Turbine - Generator - Condenser Elevation	127
2.5.1F	Typical Stress Analysis Results	133
2.5.1G	H.R.E. Steam Piping	136
2.5.2A	H.R.E. Steam Pressure and Flow vs Operating Power	140
2.5.5A	Pressure Head vs Flow - Feedwater Pump	153
2.6.1A	The Emergency Cooling System Layout (Pictorial)	165
2.9.3A	Leak Detection System	175
2.10A	H.R.E. Remote Handling Tools	177
2.10B	H.R.E. Remote Handling Tools (Handles)	178
2.10C	Large Air Impact Wrench and Extension	179
2.10D	Extension Handle Pipe Wrench	180
2.10E	Angle - Ratchet Wrench	181
2.10F	Socket Wrench and Extension	182
3.2A	Shielding - Plan and Elevations	194
3.2B	Pictorial HRE Shield Arrangement	195
3.6A	Fast Neutron Source in External Piping	200
3.6B	Slow Neutron Flux in Shielding	201
3.6C	Slow Flux in an Infinite Shield	202
3.6D	Induced Gamma Activity - 347 Stainless Steel	204
3.6E	Induced Gamma Activity - ASTM 212B and SA-105-461 Carbon Steel	205
3.6F	Induced Gamma Activity - Barytes Concrete	206
3.6G	Geometric Factor - Spherical Source - Volume Distribution	207
3.6H	Geometric Factor - Spherical Source - Surface Distribution	208

[redacted]

[redacted]

Figure No.	Title	Page
3.6J	Geometric Factor - Cylindrical Surface Distribution	209
3.6K	Self Shielding - Spherical Source - Volume Distribution	210
3.6L	Self Shielding - Thin Plates or Shells	211
3.6M	Self Shielding - Thin Plates or Shells	212
3.8A	Air Distribution Through Shield	216
3.8B	Duct-Fan Characteristic Curves	218
4.2A	Safety Rod Assembly	222
4.3A	Safety and Regulating Plates (Top View)	226
4.3B	Safety and Regulating Plates (Elevation)	227
4.3C	Revised Regulating Rod Assembly	228
5.2A	Flow Diagram and Valve Relation - Soup Sampler	250
5.2B	Manipulator Controls	251
5.2C	Relation of Indexing Mechanism to Charging Port and Manipulator	252
5.2D	Soup Sampler - General Assembly	254
5.2E	Sample Carrier for Soup	257
5.3A	D_2O Sampler (Schematic Drawing)	259
5.3B	Alternate Sampling Device	260
5.3C	D_2O Sample Carrier	261
5.4A	Sampler for High Pressure Helium	263
5.4B	Sample Carriers	264
5.5A	Soup Sampler - Chemical Laboratory Apparatus	266
6.2A	Horizontal Instrument Holes	269
6.2B	Instrument Hole Assembly	270
6.3A	Corrosion Sample Holder	273

[redacted]

PREFACE

The following manual has been compiled at the request of the HRE Steering Committee to consolidate all pertinent mechanical and process design data considered relevant to the operation and maintenance of the HRE, and to preserve a coherent record of the evolution of the design. A similar manual has been issued (ORNL-1094) in which the basis of design for instrumentation and control of the HRE is described. These manuals necessarily overlap to some extent, but duplication of contents has been held to a minimum consistent with clarity. Physical calculations pertaining to the HRE are not discussed in full except where necessary to describe adequately an item or system, nor are data pertaining to the chemistry of the fuel or corrosion of materials of construction fully presented since it is believed that such information can be more effectively presented by a separate manuscript.

Many persons and/or groups have contributed to the design of the equipment and processes since the conception of the HRE. In some cases, this information has been recorded in the form of memorandums or reports addressed to the HRE file, whereas, in other cases the data have been recorded in personal files only and have never been published. These reports, published or unpublished, have been the basic supply of information from which this manual has been compiled. Each section of the manual may then be considered a condensation of existing data, but where it was felt that greater clarity and accuracy of presentation would be gained without resulting in excessive length, the material was transcribed almost without change. A complete bibliography and list of reference drawings are tabulated in the appendix such that further details pertaining to the design may be obtained if desired.

Because of the detailed nature of this manual it is considered to be of greatest interest to the design and operating groups and is published as a memorandum with limited distribution at this time. When the HRE has been operated successfully the contents may be abstracted and included in a design, construction, and operating report of general interest.

CHAPTER 1

INTRODUCTION

1.1 Purpose of Reactor

The essential simplicity of a homogeneous reactor, its freedom from Wigner disease, the possibility of low processing costs and high breeding efficiency, all made construction of a homogeneous reactor appear very attractive to the staff of Oak Ridge National Laboratory in the year 1945, and the design of a 10,000 Kw homogeneous reactor was actually instigated at this time. Two major problems - suppression of bubbling, and reduction of hold-up - indicated that the design of a homogeneous reactor would become of much larger scope than anticipated, hence, early in 1946, the homogeneous reactor project was temporarily abandoned in favor of the heterogeneous reactor. Therefore, from early in 1946 to approximately May of 1949, the major efforts of the Reactor Technology Design Section were devoted to the design of the heterogeneous reactor, which has since become known as the Materials Testing Reactor.

In May of 1949, with the near completion of the MTR design, the design section was instructed by Dr. A. M. Weinberg to proceed again with preliminary work on a small, homogeneous, circulating fuel type of reactor which was to have for its major objectives the following:

(a) To demonstrate the operational feasibility of a circulating fuel, fairly high specific power reactor.

(b) To study radiation decomposition and corrosion behavior in a homogeneous reactor at flux densities of the same order as those which might be encountered in a large scale Pu producer, or a homogeneous, power-neutron producer.

(c) To demonstrate electrical power production from a homogeneous circulating system.

(d) To give direct and complete operational experience in the handling of a homogeneous, circulating fuel chain reactor.

1.2 Design Criteria for the HRE

Design considerations for a homogeneous reactor are entirely different from the criteria presented the designer of a thermal, heterogeneous reactor in several important respects. Probably the most significant is the consideration of the fuel element since it is in liquid form, and, hence, is capable of being pumped for recirculation. In realization of these requirements and based upon data and operating experience with the Los Alamos Water Boiler plus data accumulated from previous work with homogeneous systems, the HRE Steering Committee at an early date formulated the following criteria which have since been adhered to as closely as possible in the design of the HRE.

(a) Selection of fuel. The choice of fuel for the HRE was originally between uranyl nitrate or uranyl sulfate in light or heavy water solution. Because more was known concerning the phase stability of the sulfate solution in light water at high temperatures and because its nuclear properties are suitable, uranyl sulfate solution in light water was chosen for the combined fuel and moderator.

(b) Selection of materials for construction. Based upon work performed by the corrosion study group and with their recommendation, Type 347 stainless steel was selected as the construction material with the best corrosion resistance and mechanical properties for fabrication of components in direct contact with the fuel solution.

(c) Selection of power level. The power level required to make the HRE successful is a compromise between that required to reproduce the fission density in large scale homogeneous reactors of interest, and what is considered to be a safe extrapolation from the existing Los Alamos water boiler. A comparison of power densities in various proposed large scale homogeneous reactors and in the HRE follows:

TABLE 1.2A

	Power-Neutron Producer	Plutonium Producer	HRE
Gram U per liter	5	200	30
Power density Kw/liter	50	20	5-20
Total Power	200 mw	1000 mw	0.25-1 mw

(d) Selection of temperature. The temperature specification for the HRE is a compromise between what is possible considering corrosion, phase stability, and pressure tank design, and what is desirable for recombination and power production. The design temperature of 250°C was somewhat arbitrarily selected as a satisfactory compromise point.

(e) Criterion for plant layout. It was early designated that the layout of the system components of the HRE should be such as to minimize uranium hold-up. Also the equipment should be designed and located in the shielding for accessibility.

(f) Operating pressure. At 250°C (482°F) the vapor pressure of water is 577 psia. It was decided to operate the HRE at enough beyond this pressure to provide an adequate safety factor against boiling, and to minimize the volume of bubbles in the core tank. A design pressure of 1000 psia was, therefore, specificied.

(g). Core tank geometry. A sphere-shaped tank provides the least surface area to volume ratio, thereby, providing the most favorable vessel from a nuclear standpoint. Also, for a given pressure and radius, the wall thickness required for a spherical vessel is one-half of that required for a comparable cylindrical vessel. In view of these facts and the fact that a spherical tank of this size is not much harder to fabricate than a cylindrical tank of comparable size, the core tank was specified as a sphere of 50 liters capacity.

(h) The reflector selection. As originally conceived, the HRE was to be a beryllium or carbon reflected reactor with a cylindrical core tank of zirconium. However, the same advantages which make circulating the fuel attractive are also applicable to the reflector itself, hence, the original concept was reconsidered and it was decided to use heavy water as the reflector material, the heat developed in the heavy water from the core being used as feed water heat for the power generation system. Also, a liquid reflector makes possible another method of shim control by varying the reflector level.

With these major premises decided, the HRE design was undertaken with members of the Reactor Technology Group and of Engineering and Maintenance as participants. Every effort has been made to reduce the project to a minimum consistent with safety and with the flexibility required of an experiment.

1.3 Advantages and Disadvantages of Homogeneous Systems.

The principal advantages of homogeneous systems may be considered to be the following:

(a) Neutron losses may be kept low since structural materials can be largely eliminated from the reactor.

(b) Continuous processing becomes possible with consequently lower neutron losses to fission product poisons.

(c) Lower initial and operating cost, as a result of the simplicity of design, chemical handling, refueling, and few intricate parts.

(d) A minimum amount of fuel is required for a given power level.

(e) There is no deteriorating radiation damage to hard-to-replace structural material or moderator material, i.e., no "Wigner" disease.

(f) It is possible to produce power and RW products simultaneously with Pu production with a low hold-up of fuel.

Counterbalanced against these advantages, it is recognized that there are certain inherent disadvantages to the construction and operation of a homogeneous reactor. These are:

(a) The possibility of sudden reactivity changes due to density fluctuations caused either by bubble formation or temperature changes may create difficult control problems.

(b) The fuel solution is very corrosive to most materials of construction.

(c) There will be a loss of some delayed neutrons in the external circuit which conceivably can narrow the margin for safe control.

It is partly to answer these questions that the HRE was conceived. Therefore, a variety of instrumentation and control devices which may or may not be necessary in future large scale, homogeneous systems have been built into the HRE which contribute to its apparent complexity.

1.4 General Description of the HRE

As finally conceived, the HRE may be described as a light water moderated, heavy water reflected, circulating fuel type of reactor. The nuclear reaction is achieved in a 50 liter sphere-shaped core tank of Type 347 stainless steel through which the fuel solution of uranyl sulfate in light water circulates at a rate of 100 gpm. This core tank is surrounded by a heavy water reflector of 10 inches thickness. The two liquids are circulated at approximately 1000 psi pressure through their respective systems by centrifugal, circulating pumps of special design. The fuel solution circulates at an average temperature from the core tank of 250°C (482°F) through a U-tube, horizontal type of shell and tube heat exchanger, wherein the heat developed by the nuclear reaction is removed by generating steam on the shell side at approximately 200 psi. This steam is subsequently used to generate electrical power at 130 Kw output. The fuel solution is circulated through an all-welded piping system of Type 347 stainless steel designed to withstand a pressure of 2000 psi. Heat developed in the reflector is removed by a concentric pipe heat exchanger, heavy water being circulated at approximately 30 gpm in the inner pipe, and boiler feed water in the annulus.

The fuel solution and heavy water respectively may be stored in dump tanks. These are also used as safety devices since either liquid may be quickly transferred to its respective tanks automatically on receipt of a "scram" signal. Since these tanks operate at substantially atmospheric pressure, high pressure feed pumps capable of returning the fluids at rates from 1 to 3 gpm are provided. Extreme care has been taken to prevent mixture of the two liquids under circumstances other than a break in the core tank or soup piping within the reflector vessel.

The HRE may be controlled by one or all of several ways. A control plate immersed in the reflector closely adjacent to the core tank provides for small fluctuations in reactivity. Similarly constructed safety plates with large surface area of boron containing material are poised in the vapor space directly over the heavy water ready for immediate insertion. An evaporator in the dump tank system, with condensate storage tanks, may be used to vary the concentration of fuel solution for shim control. Since the reflector is a fluid, considerable changes in reactivity may be effected by changing its level relative to the core tank. Finally, there is inherent control of the reactor by the very large negative temperature coefficient of reactivity.

Pressure on the soup system is maintained by a steam pressurizer. Stagnant liquid is kept at a temperature higher than the rest of the system, and transmits its vapor pressure hydraulically to the soup. The reflector is pressurized with helium.

Hydrogen and oxygen generated in the system by dissociation of the water molecule from radiation absorption are recombined by suitable apparatus. Gases liberated in the soup system are recombined in a spark-ignited, burner type apparatus backed up by a catalytic recombiner. Gases liberated in the reflector system are combined catalytically.

All of these systems and the associated apparatus are housed in a compartmentalized, high-density concrete shield, the structure being built of prefabricated blocks. The overall thickness of concrete surrounding the reactor proper is seven feet to reduce radiation in the process room to tolerable levels.

Figure 1.1A presents a complete flow diagram of the HRE showing all equipment items, process lines and instrumentation in order to provide an overall picture of the reactor and relation of equipment. This flow sheet may be subdivided into five major systems, each of which will be discussed in turn.

Figure 1.1B is a perspective layout of the HRE building showing the reactor shield, the Pulsafeeder feed pump pits, the power generation equipment, the stack and fan, the chemical laboratory, the crane, the control room, the reactor core tank and reflector vessel flange, and certain of the control equipment on the north face of the shield.

Figure 1.1C shows the core tank of the HRE and method of suspension from the pressure vessel flange by the inlet and outlet piping to provide for free thermal expansion of the components. This drawing also shows the control plates and drives and their relative location with respect to the core tank.

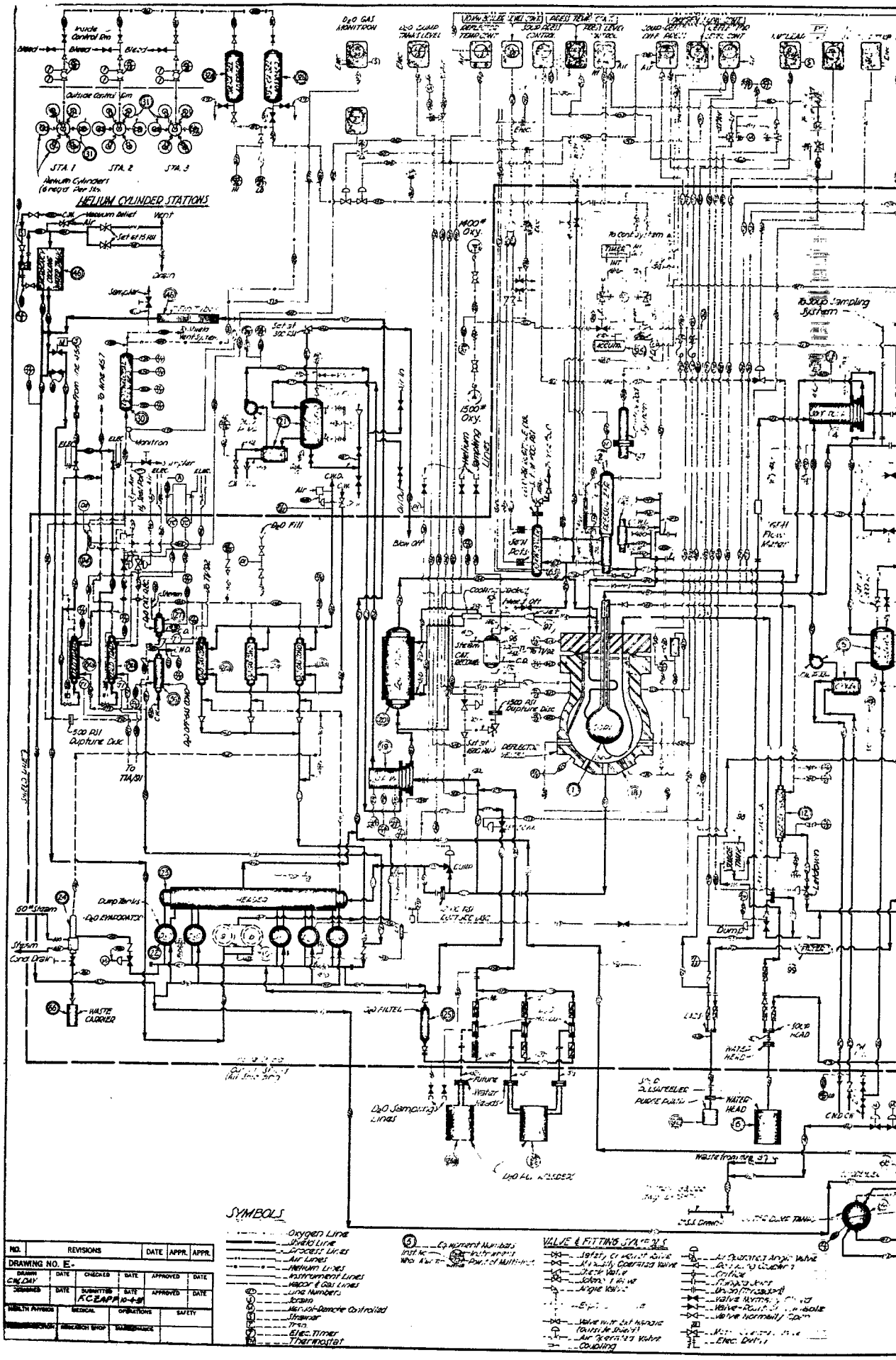
HELIUM CYLINDER STATIONS
STA. 1
STA. 2
STA. 3
Inside Control Rm
Outside Control Rm
D2O GAS MONITOR
D2O SUMP TANK LEVEL
VOLUME SOLUTE TEMP. CONT.
AREA TEMP. CONTROL
SOLID DEPOSIT CONTROL
AREA LEVEL CONTROL
SOLID DEPOSIT OFF FACTS
DEPOSIT LOW CONT. OFF FACTS
DEPOSIT LOW CONTROL
LIQUID LEVEL CONT.
To Cont. System
To Solid Sampling System
1400# Oxy.
1500# Oxy.
Helium Sampling Lines
Vacuum Relief
Vent
Drain
Sample
Set at 15 PSI
Set at 300 PSI
Set at 600 PSI
Set at 800 PSI
Monitor
Air
C.W.D.
D2O Fill
Blow Off
Steam
Cond. Drain
500 PSI Rupture Disc
1500 PSI Rupture Disc
To T1A/S1
Dump Tank
D2O EVAPORATOR
HEATER
60# Steam
Steam Cond. Drain
WASTE CARRIER
D2O FILTER
D2O Sampling Lines
Future Water Heater
D2O HL WELDER
Dump
FILTER
100# HEAD
WATER HEAD
Waste from Vol. 37
D2O Drain
SYMBOLS
Oxygen Line
Hydro Line
Process Lines
Air Lines
Helium Lines
Instrument Lines
Vapor & Gas Lines
Line Numbers
Scale
Manual-Remote Controlled
Strainer
Trap
Elec. Timer
Thermostat
Equipment Numbers
Instrument
Point of Multiplex
VALVE & FITTING SYMBOLS
Safety or Relief Valve
Manually Operated Valve
Check Valve
Globe Valve
Angle Valve
Valve with Set Pressure
Valve Normally Closed
Valve Normally Open
Elec. Drive
Coupling
Air Operated Angle Valve
Rotating Coupling
Orifice
Flanged Joint
Union (Threaded)
Valve Normally Open
Valve Normally Closed
Valve Normally Open
Elec. Drive
NO. REVISIONS DATE APPR. APPR.
DRAWING NO. E-
DRAWN CW DAY DATE CHECKED DATE APPROVED DATE
DESIGNED DATE SUBMITTED F.C. ZAPP 10-4-61 DATE APPROVED DATE
HEALTH PHYSICS MEDICAL OPERATIONS SAFETY
MAINTENANCE RESEARCH SHOP MAINTENANCE

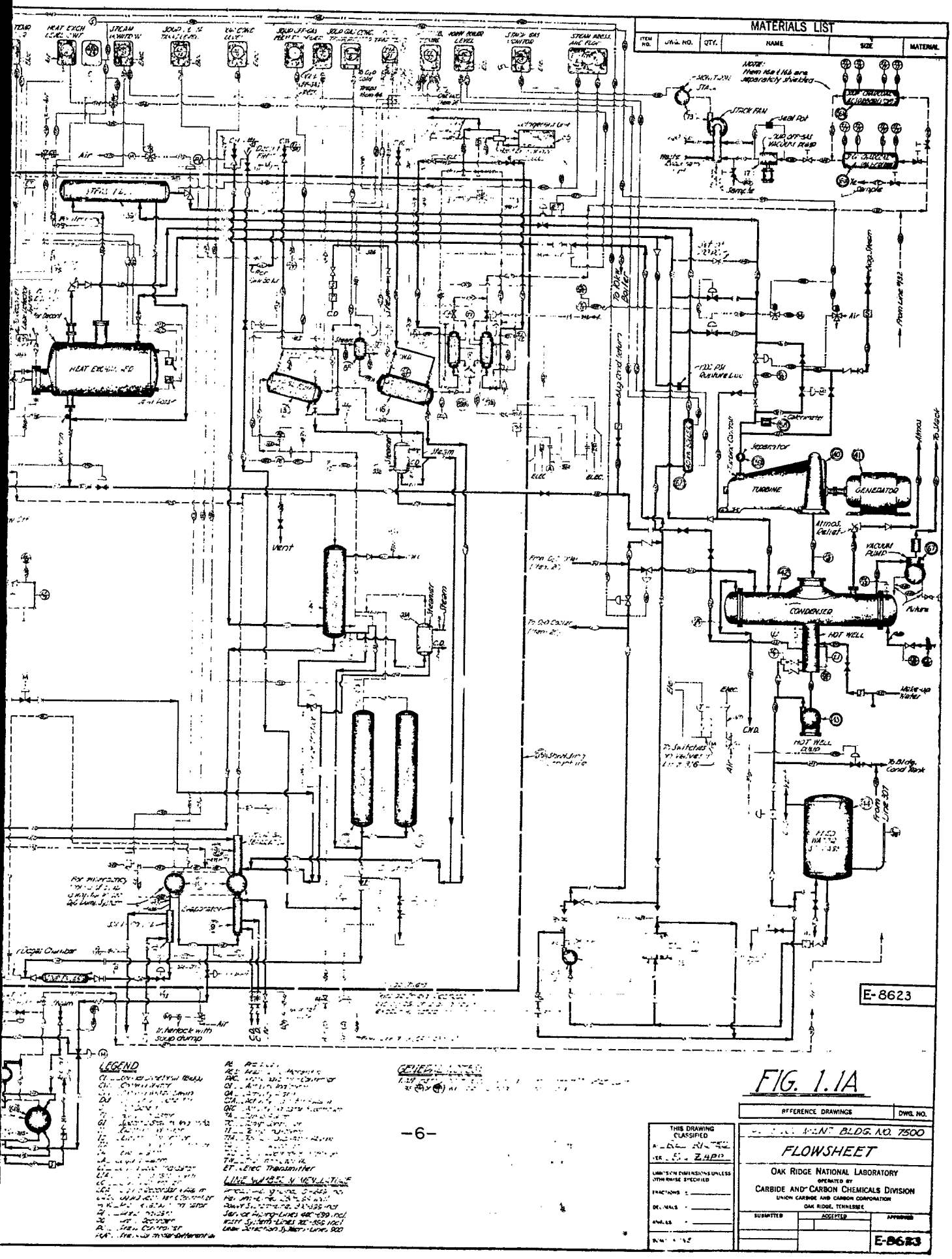
MATERIALS LIST
ITEM NO.
DWG. NO.
QTY.
NAME
SIZE
MATERIAL
STEAM
HEAT EXCHANGER
STACK FAN
Seal Pot
Sample
Air
Steam
Vent
To 10 kw Boiler
Separator
TURBINE
GENERATOR
Atmos. Relief
VACUUM PUMP
CONDENSER
HOT WELL
Make-up Water
HOT WELL PUMP
To Bldg. Cond Tank
From Line 307
To Stack
Atmos
Future
Evaporator
Interlock with soup dump
E-8623
LEGEND
ET Elec Transmitter
LINE NUMBER IN MENSURE
GENERAL NOTES
THIS DRAWING CLASSIFIED
REFERENCE DRAWINGS
DWG. NO.
BLDG. NO. 7500
FLOWSHEET
OAK RIDGE NATIONAL LABORATORY
OPERATED BY
CARBIDE AND CARBON CHEMICALS DIVISION
UNION CARBIDE AND CARBON CORPORATION
OAK RIDGE, TENNESSEE
SUBMITTED
ACCEPTED
APPROVED
E-8623

FIG. 1.1A

[redacted]
DWG. D-9065 A

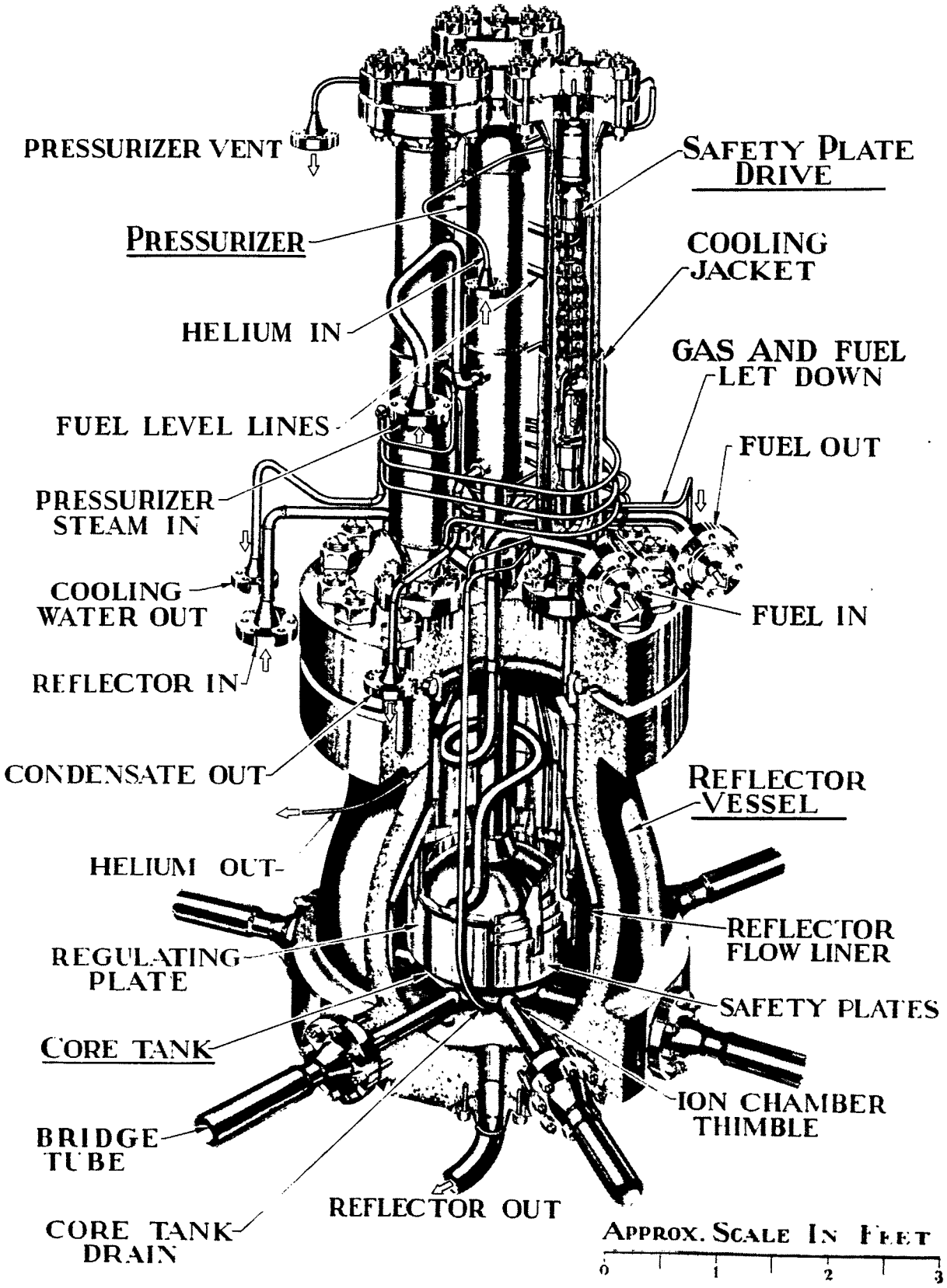

Fig. 1.1C Pictorial Layout of Core Tank and Top Flange

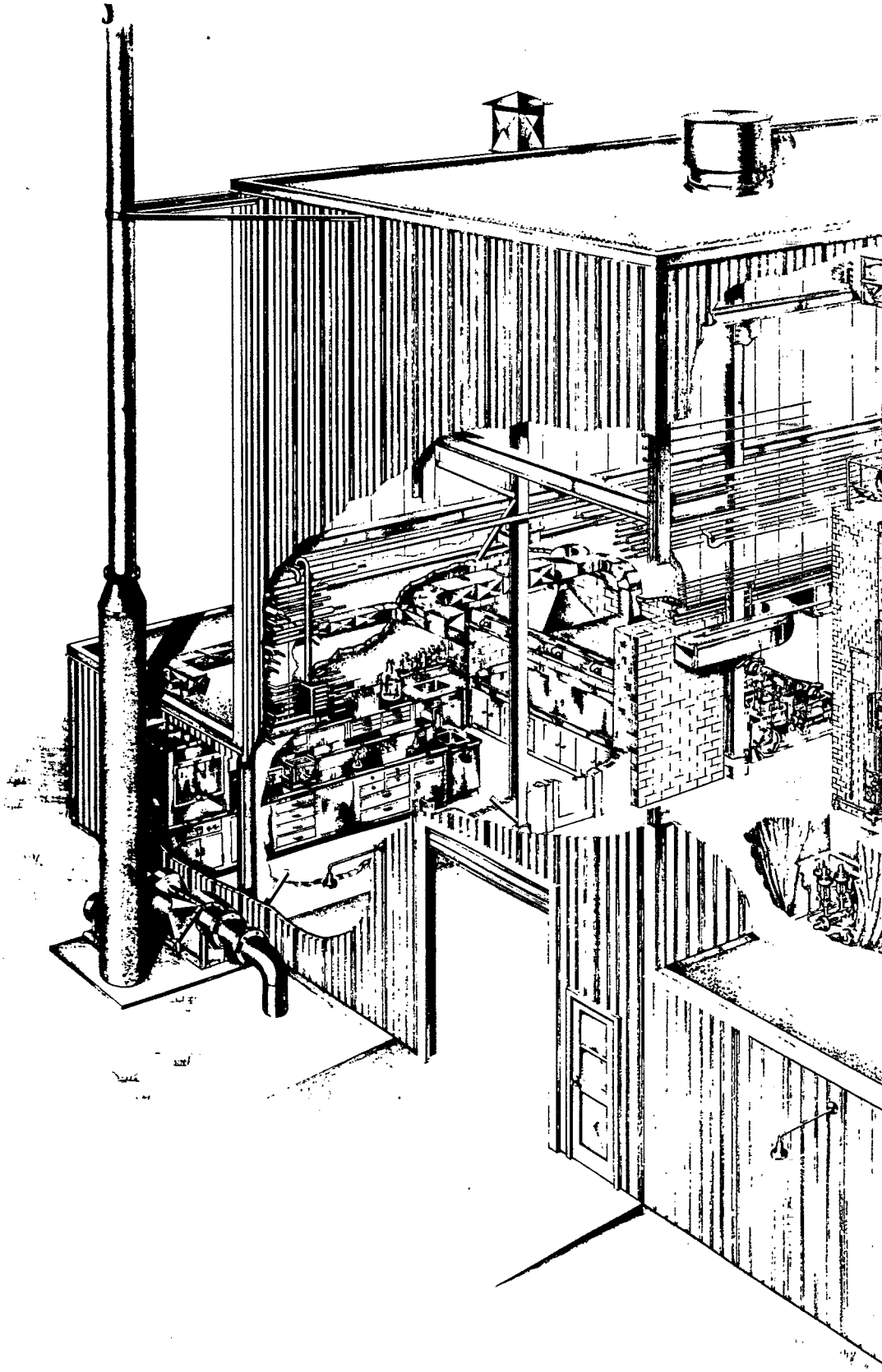

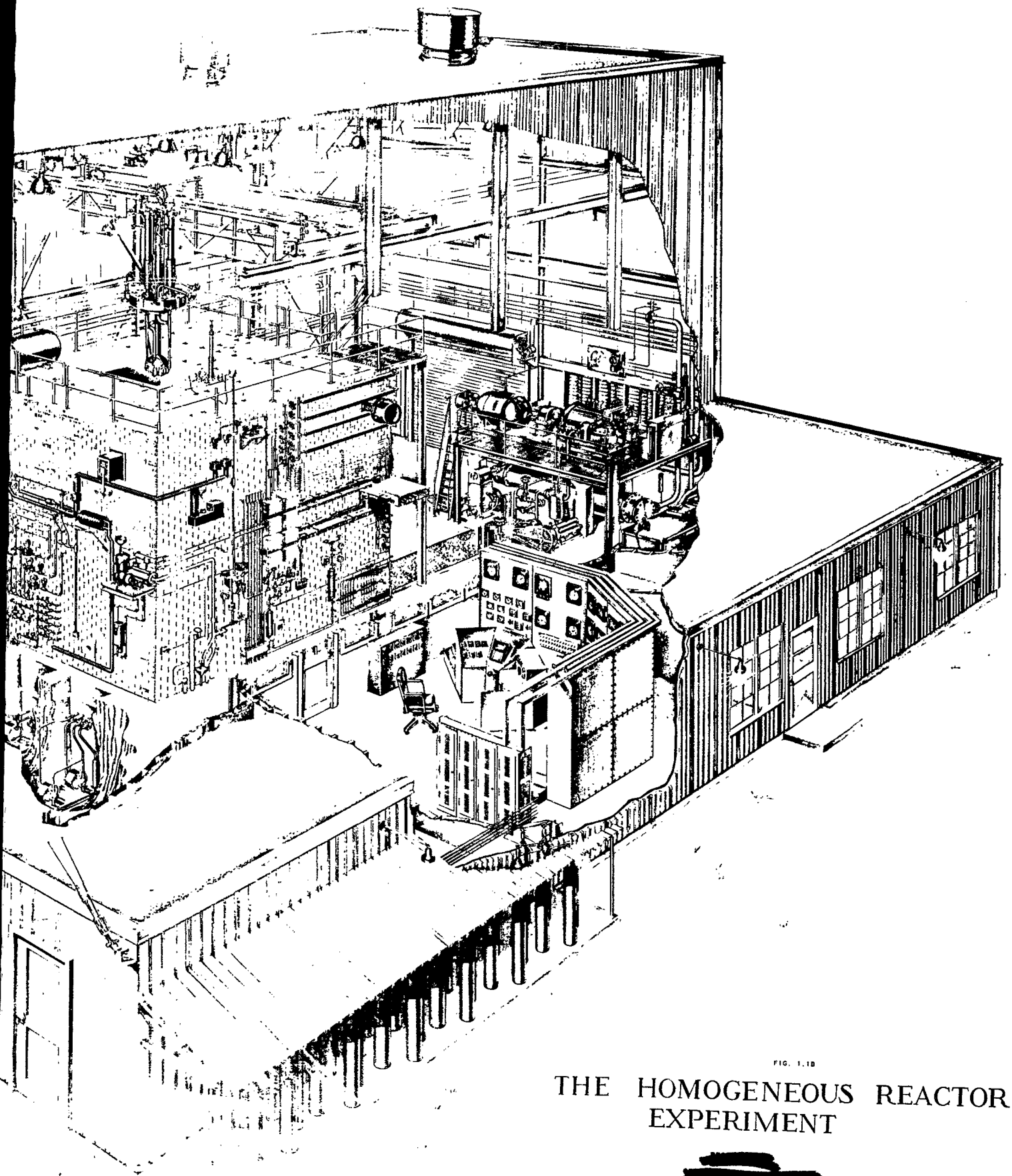

FIG. 1.1B

THE HOMOGENEOUS REACTOR EXPERIMENT

[redacted]

"This material contains information affecting the national defense of the United States within the meaning of the espionage laws, Title 18, U.S.C., Secs. 793 and 794, the transmission or revelation of which in any manner to an unauthorized person is prohibited by law."

strauchman 5-27-52
E-8305

1.5 Location of the HRE

The HRE is located at a site 0.6 miles southeast of the center of the present ORNL area. This places the reactor in the center of an uninhabited valley approximately 4 miles long and 0.5 miles wide. The general orientation of the axis of the valley is N.E. and S.W. and it is parallel to Bethel and other neighboring valleys. The Clinch River terminates both ends of the valley, as well as forming a natural boundary of approximately 2-mile radius for a 180° swing from the site.

Between the site and Bethel valley, containing ORNL at 820 feet elevation, the same as the site, is Haw Ridge averaging about 980 feet in elevation. This ridge is continuous except for a short break, known as White Oak Creek Gap (770 ft), through which a portion of Bethel Valley drainage occurs. To the south and east of the site is a large area of high and rough terrain extending south to the Clinch River.

1.6 Availability of Utilities

A well graded dirt road connects the site with the ORNL, X-10 Area. This road circles through White Oak Creek Gap and turns northeast parallel to Haw Ridge passing directly in front of the site, hence northwest at a distance of one mile from the site to Bethel Valley road. Helium cylinders, oxygen cylinders, chemicals and other portable supplies may be trucked in to the site via this road.

A 12-inch pipe line connects the site with the ORNL reservoir. This pipe line makes an inverted U over Haw Ridge. It is calculated that 2000 gallons/minute, at 15.5 psi, of process water may be delivered to the site through this line, where a portion can in turn be processed into demineralized and distilled water for boiler feed, etc. At an estimated maximum demand of 750 gpm, the pressure is computed at 46.2 psi on the downstream side of the main gate valve in the building.

Electrical energy to the site is supplied by a 154/13.2 KV substation, transmission line and transformer step-down station. From this station the 13.2 KV, 3 phase, 60 cycle circuit is transformed to the following electrical services at strategic outlets throughout the building.

(a) A 120/208 volt, 150 KVA, three phase, 60 cycle, four wire lighting and receptacle system.

(b) A 440 volt, 150 KVA, three phase, 60 cycle, three wire power system.

(c) A 115 volt, 15 KVA, single phase, 60 cycle, two wire regulated voltage system.

CHAPTER 2

ENGINEERING DESCRIPTION OF THE HRE

The HRE can be arbitrarily divided into five systems; the high and low pressure "soup" systems, the high and low pressure reflector systems, and the power system.

Each system is presented separately by a flowsheet on which pertinent operating data corresponding to 1000 Kw power level is indicated. Individual discussion of each system follows.

2.1 The High Pressure Soup System

2.1.1 General Description of System Design

The main high pressure soup system circuit, as shown in Figure 2.1.1A contains the reactor core, the main heat exchanger, and the circulating pump. Auxiliary equipment associated with the circuit are the soup return feed pump, the soup pump oil system, the circulating pump purge system, the oxygen metering system, and the pressurizer. Figures 2.1.1B and 2.1.1C show the soup cell equipment and piping.

A gas removal system is necessary to remove the H_2 and O_2 liberated from the soup by the fission process. The separation of the gas is accomplished by introducing the soup into the core tangentially. At high stream velocity this produces a vortex aligned with the top outlet from which the gases and some liquid are removed by a system of concentric pipes carrying gas, circulating soup, and a pressurizer connection. The two-phase stream (at 1000 psi) flows through the centermost pipe and passes through a let-down system which consists of a heat exchanger and special valve. The stream passes to a low pressure liquid-gas separator, and the gases are then piped to a recombiner system for recombination and condensation of H_2O. The resulting soup and water flows to the dump tanks where it can be returned to the core by the feed pump.

A drain connection, which is the lowest point in the high pressure system is located at the bottom of the core as shown in Figure 1.1C. This line will permit "dumping" of the soup through the reflector vessel flange to the "dump valve", and hence into the dump tanks. The pressure drop through this valve is approximately 980 psi.

The circulating pump will deliver approximately 100 gpm under operating conditions, which gives an average residence time for the soup of about eight seconds in the core and approximately two seconds in the heat exchanger and external system. The pressure drop in the core is 20.4 psi, and in the heat exchanger approximately 33.6 psi. The total drop in the main system is approximately 60.9 psi at 100 GPM and 482°F.

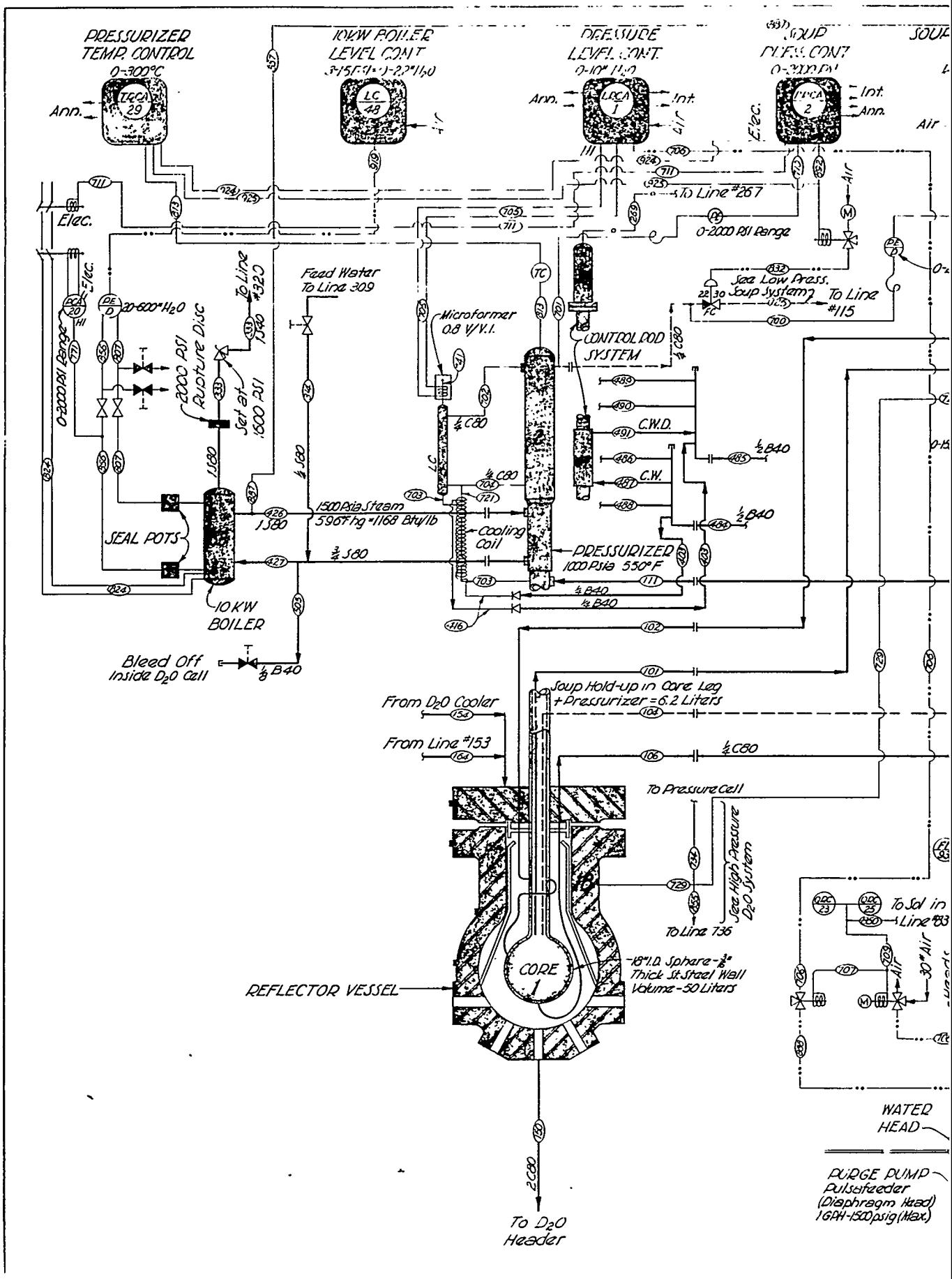
PRESSURIZER TEMP. CONTROL
0-300°C
10KW BOILER LEVEL CONT
PRESSURE LEVEL CONT.
SOUP PRESS. CONT
Ann.
Int.
Elec.
Air
To Line #267
0-2000 PSI Range
See Low Press. Soup System
To Line #115
Feed Water To Line 309
Microformer 0.8 V/V.I.
CONTROL ROD SYSTEM
20-600" H2O
0-2000 PSI Range
2000 PSI Rupture Disc
Set at 1600 PSI
To Line #320
C.W.D.
C.W.
1500 Psia Steam 596°F hg = 1168 Btu/lb
Cooling Coil
PRESSURIZER 1000 Psia 550°F
SEAL POTS
10 KW BOILER
Bleed Off Inside D2O Cell
Soup Hold-up in Core Leg + Pressurizer = 6.2 Liters
From D2O Cooler
From Line #153
To Pressure Cell
See High Pressure D2O System
To Line 736
CORE 1
18" I.D. Sphere - 3/16" Thick St. Steel Wall Volume - 50 Liters
REFLECTOR VESSEL
To Sol in Line #83
30" Air
WATER HEAD
PURGE PUMP Pulsafeeder (Diaphragm Head) 1 GPH-1500 psig (Max.)
To D2O Header

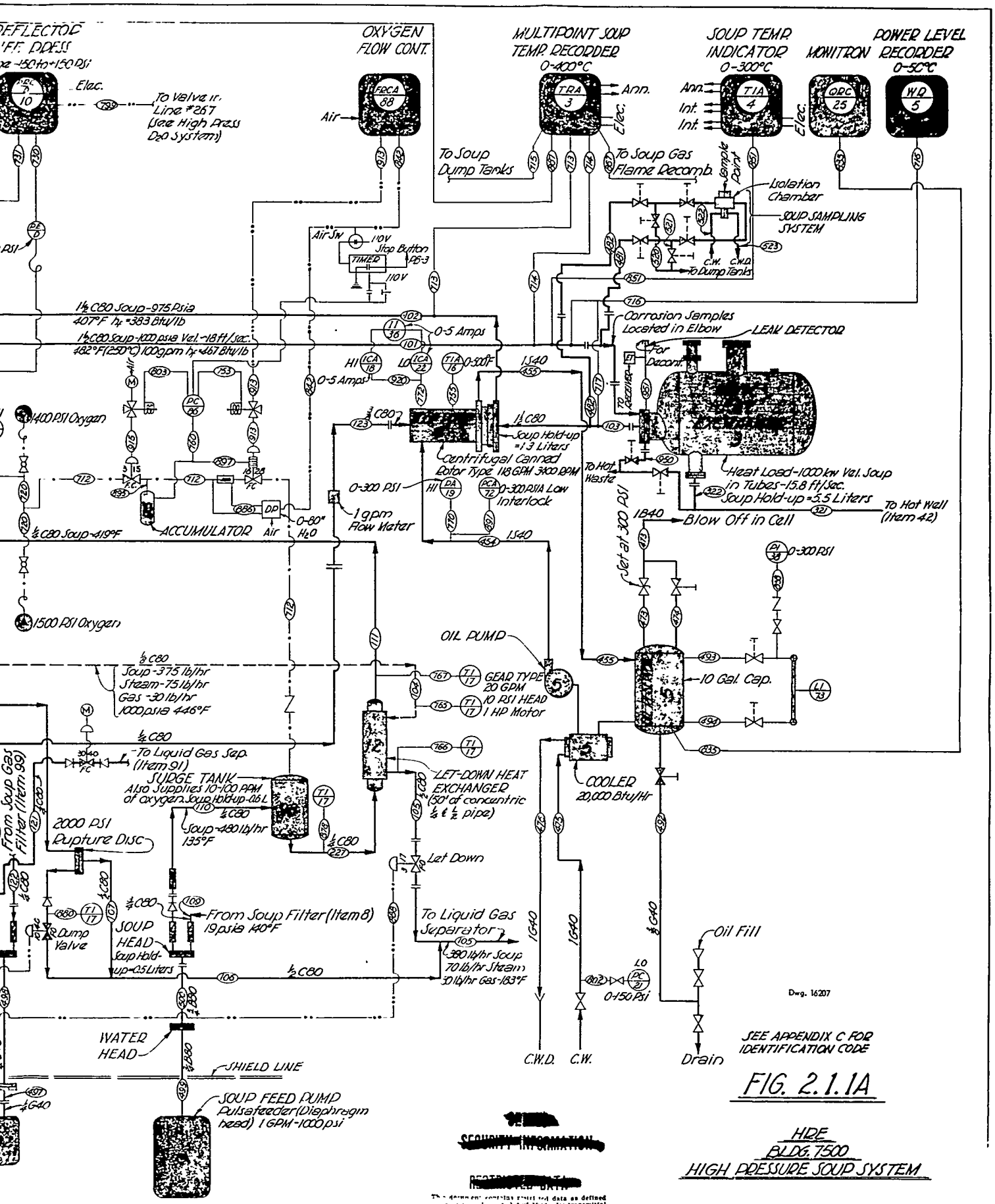

FIG. 2.1.1A

HRE
BLDG. 7500
HIGH PRESSURE SOUP SYSTEM

[redacted]

[redacted]

DRAWN: C.W. DAY

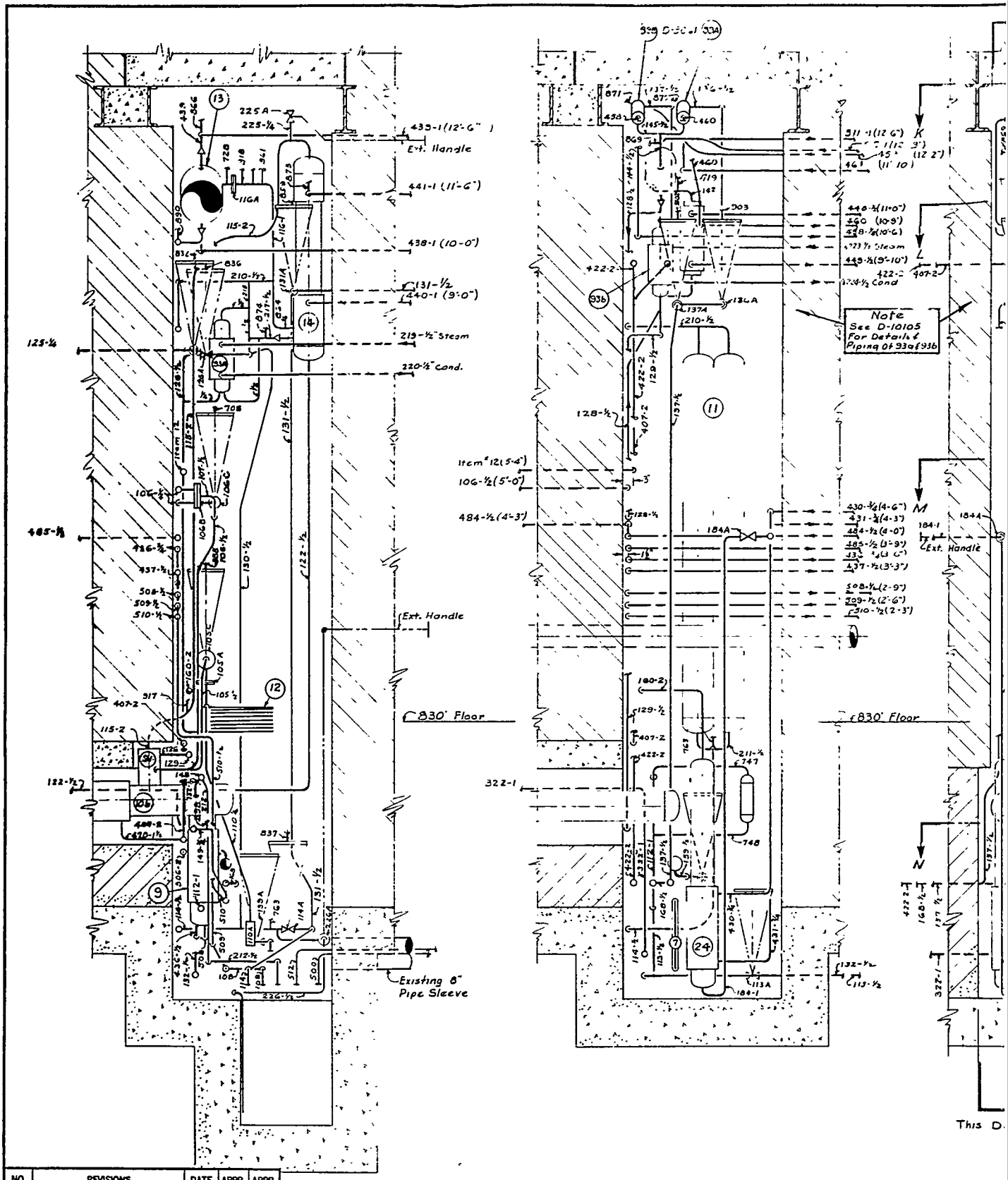

NO.	REVISIONS	DATE	APPR.	APPR.

DRAWING NO. D-9052

DRAWN	DATE	CHECKED	DATE	APPROVED	DATE
Terry	6/8/51	[illegible]	6-27-51		
DESIGNED	DATE	SUBMITTED	DATE	APPROVED	DATE

HEALTH PHYSICS	MEDICAL	OPERATIONS	SAFETY
FIRE PROTECTION	RESEARCH SHOP	MAINTENANCE	

SECTION J-J

W ⟵⟶ E

SECTION H-H

W ⟵⟶ E

D-9052

MATERIALS LIST					
ITEM NO.	DWG. NO.	QTY.	NAME	SIZE	MATERIAL

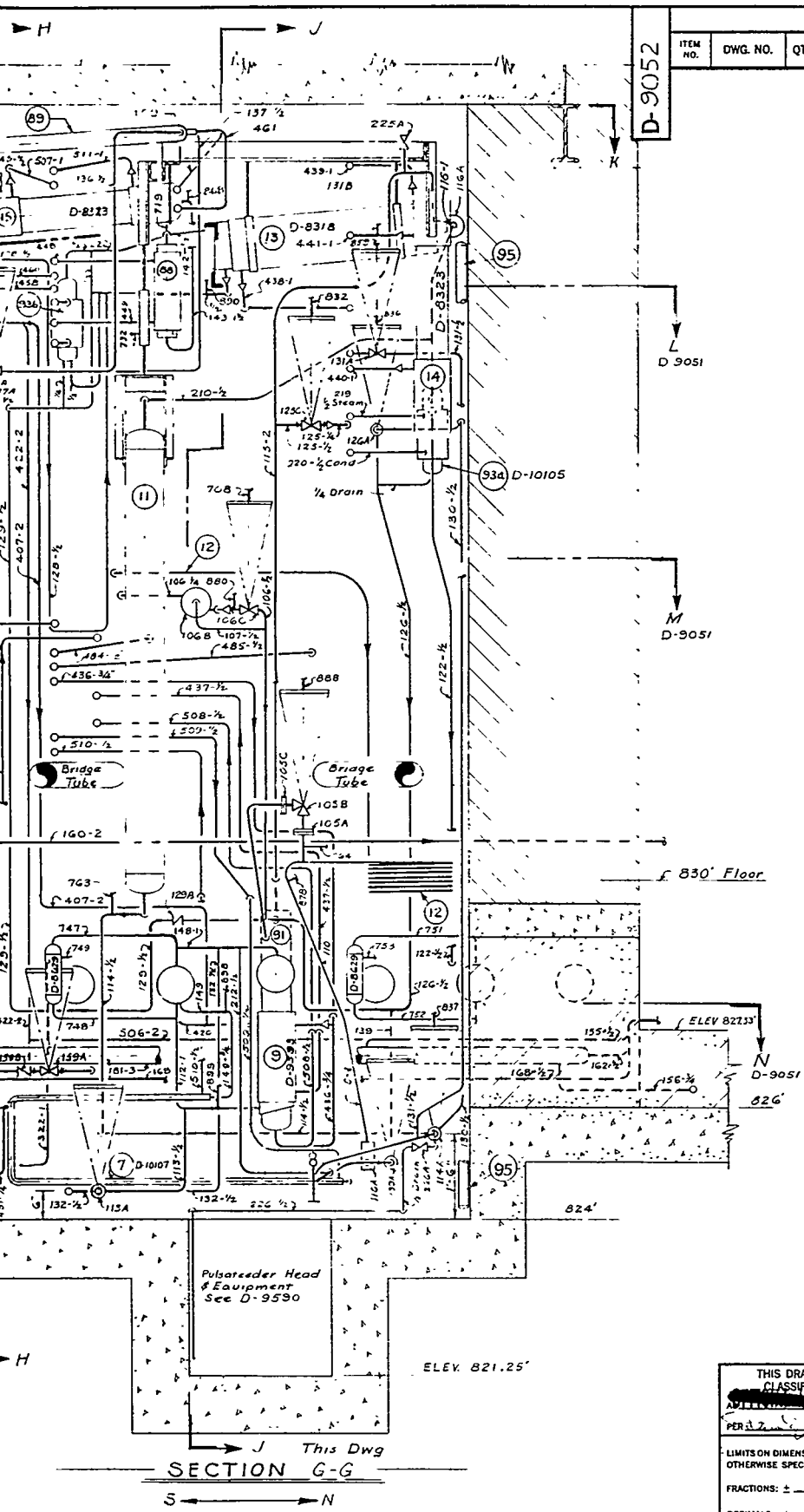

Hold Pt. 12 & 7 & Valve 105D

FIG. 2.1.1B

REFERENCE DRAWINGS	DWG. NO.
Shielded Area General Layout	D-8626
Soup Cell Equipment Location	D-9053
Piping Plan & Horizontal Sections	D-9051

THIS DRAWING CLASSIFIED [redacted]

PER

LIMITS ON DIMENSIONS UNLESS OTHERWISE SPECIFIED

FRACTIONS: ±

DECIMALS ±

ANGLES: ±

SCALE. 3/4" = 1'-0"

HRE EQUIPMENT Bldg 7500

SOUP CELL PIPING SECTIONAL ELEVATIONS

OAK RIDGE NATIONAL LABORATORY
OPERATED BY
CARBIDE AND CARBON CHEMICALS DIVISION
UNION CARBIDE AND CARBON CORPORATION
OAK RIDGE, TENNESSEE

SUBMITTED	ACCEPTED	APPROVED
		D-9052

Corrected To 9/26/51

R:

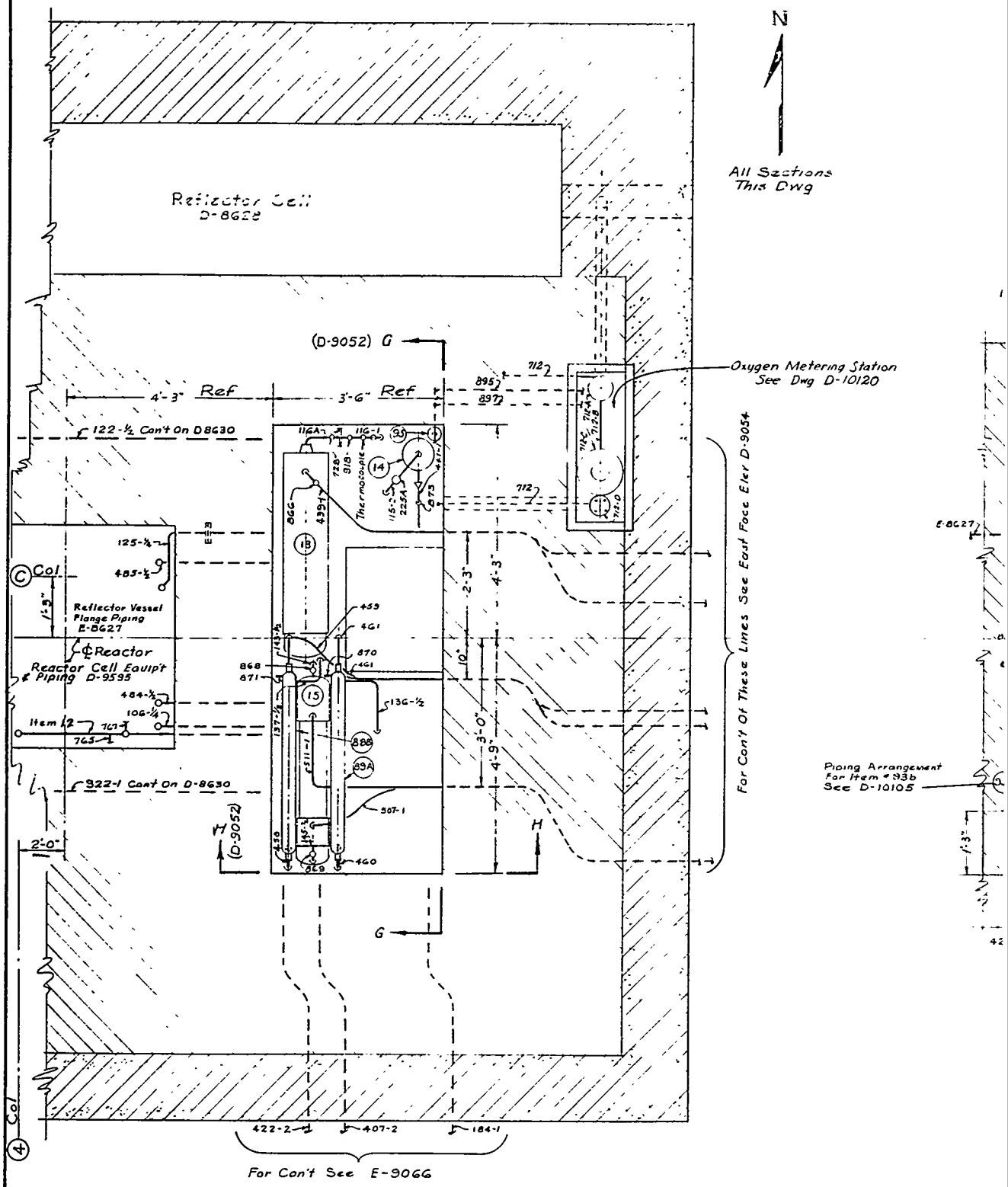

SECTION K-K
PLAN AT ELEVATION 843.67'
D-9052

NO.	REVISIONS	DATE	APPR.	APPR.

DRAWING NO. D-

DRAWN	DATE	CHECKED	DATE	APPROVED	DATE
Terry	4/11/51	Thomas	6-27-51		
DESIGNED	DATE	SUBMITTED	DATE	APPROVED	DATE

HEALTH PHYSICS	MEDICAL	OPERATIONS	SAFETY
FIRE PROTECTION	RESEARCH SHOP	MAINTENANCE	

D-9051

MATERIALS LIST

ITEM NO.	DWG. NO.	QTY.	NAME	SIZE	MATERIAL

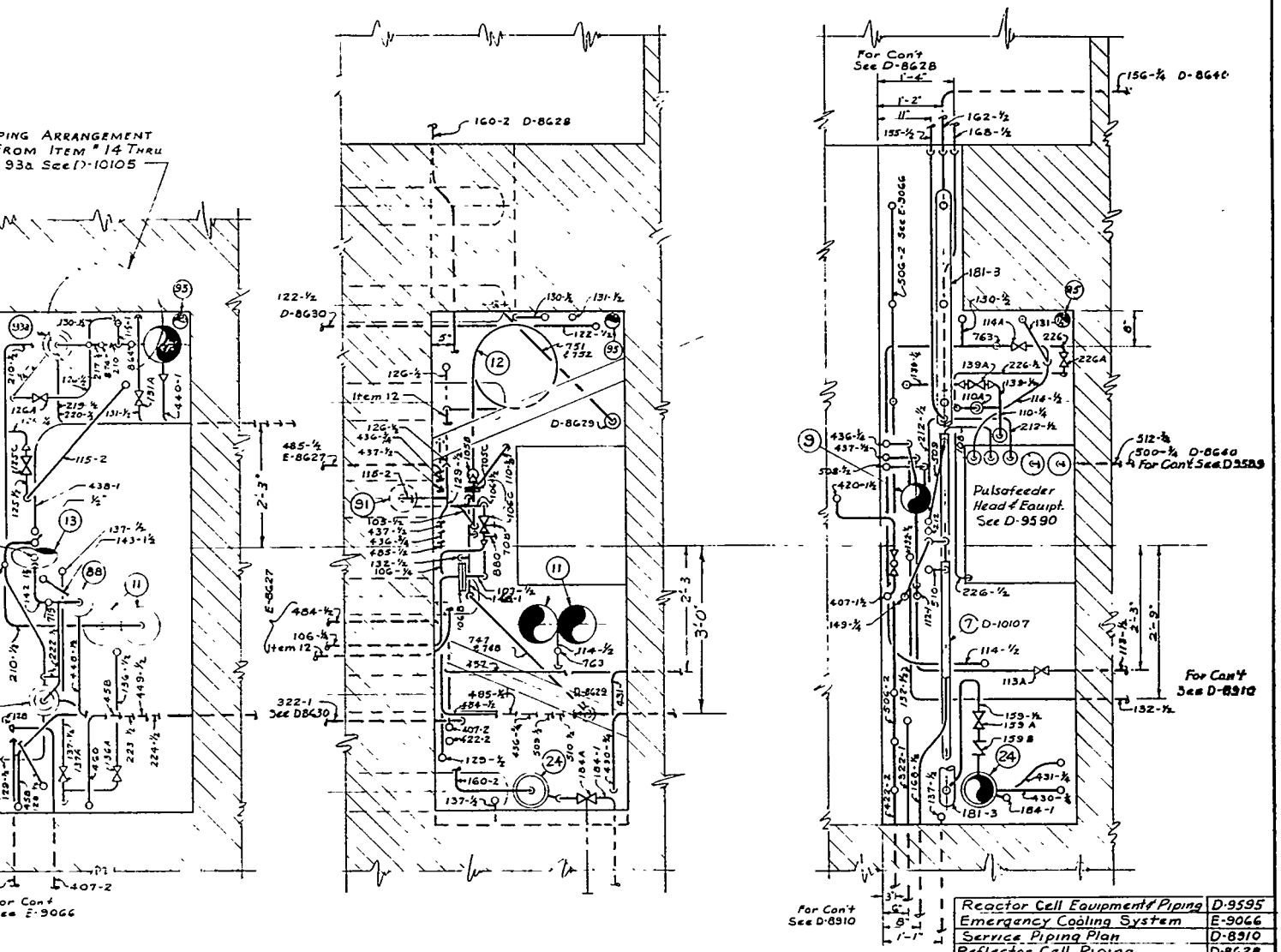

Reactor Cell Equipment & Piping	D-9595
Emergency Cooling System	E-9066
Service Piping Plan	D-8910
Reflector Cell Piping	D-8628
Piping For Soup Pit	D-9589
Inner Dump Tanks	D-8633
Dump Tank Level Indicator	D-8629
Reflector Vessel Flange Piping	E-8627
Genl Piping & Equipment Layout	D-9060
Shielded Area - General Layout	D-8626
East Face Piping Elevation	D-9054
Soup Cell Equipment Location	D-9053
Soup Cell Piping Sectional Elev.	D-9052
REFERENCE DRAWINGS	DWG. NO.

FIG. 2.1.1C

Item 93a & 93b	Steamers	D-10105
Item #6	Pulsafeeder Head & Equipment	D-9590
Item #91	Liquid Gas Separator	D-8633
Item #11	Condensate Tanks	D-9073
Item #9	Soup Evaporator	D-9593
Item #89	Cold Traps	D-9061
Item #88	Catalytical Recombiner	D-10106
Item #24	D_2O Evaporator	D-8625
Item #14, 15	Gas & Off-Gas Condenser Heads	D-8323
Item #13	Flame Recombiner	D-8318
Item #12	Soup Heat Exchanger	D-9062
Item #10	Inner Soup Dump Tanks	D-9592
Item #8	Soup Filter	D-7558
Item #7	Soup Cooler	D-10107
REFERENCE DRAWINGS		DWG NO

THIS DRAWING CLASSIFIED
[redacted]
PER: _____

LIMITS ON DIMENSIONS UNLESS OTHERWISE SPECIFIED
FRACTIONS: ±
DECIMALS: ±
ANGLES: ±
SCALE: 3/4" = 1'-0"

HRE EQUIPMENT Bldg. 7500

SOUP CELL PIPING PLAN AND HORIZONTAL SECTIONS

OAK RIDGE NATIONAL LABORATORY
OPERATED BY
CARBIDE AND CARBON CHEMICALS DIVISION
UNION CARBIDE AND CARBON CORPORATION
OAK RIDGE, TENNESSEE

SUBMITTED	ACCEPTED	APPROVED
		D-9051

Corrected To 9/26/51

13

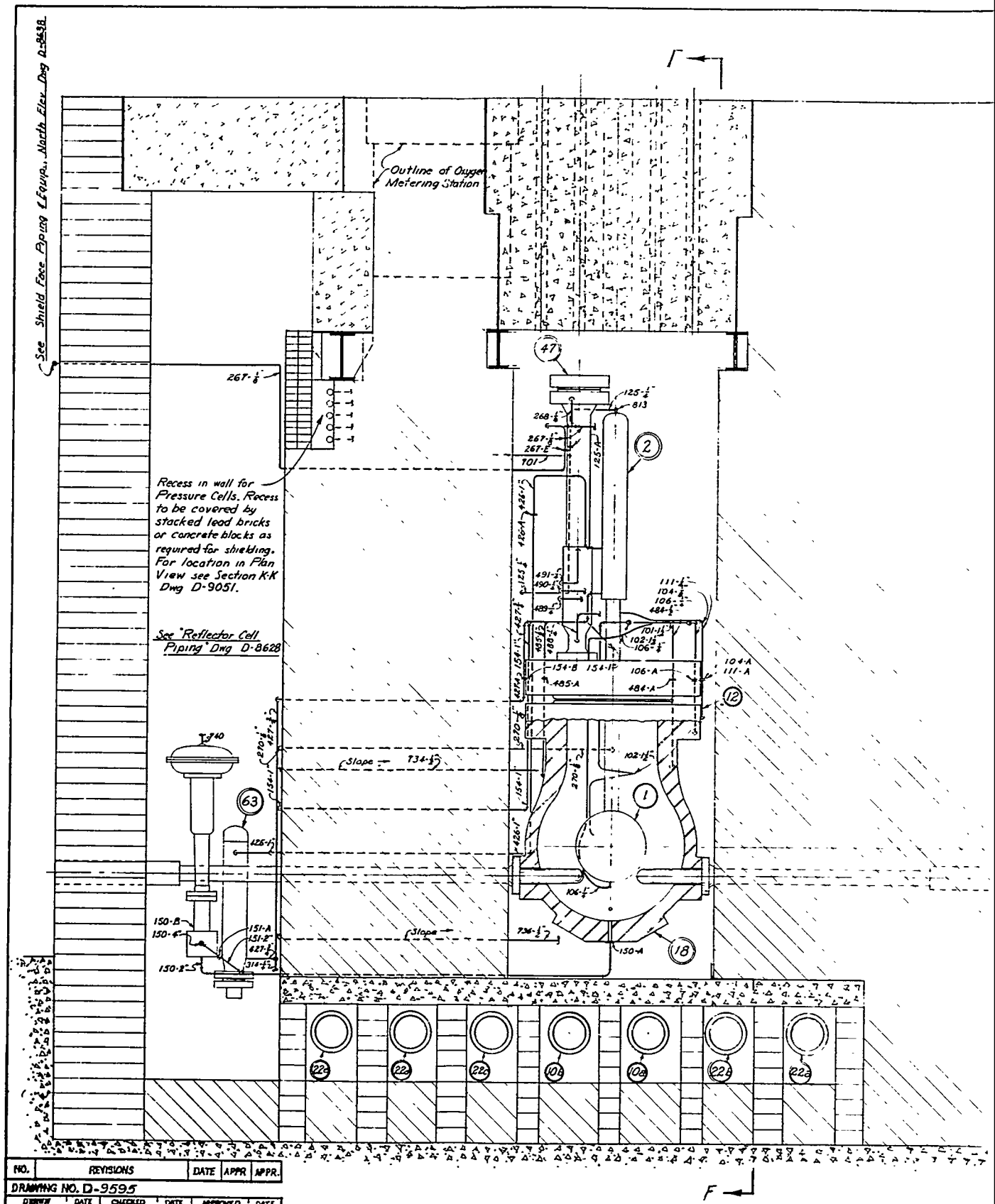

NO.	REVISIONS	DATE	APPR	APPR.

DRAWING NO. D-9595

DRAWN	DATE	CHECKED	DATE	APPROVED	DATE
[illegible]	7-23-51	R.W.F.	10/25/62	[illegible]	3/31/52
DESIGNED	DATE	SUBMITTED	DATE	APPROVED	DATE

HEALTH PHYSICS	MEDICAL	OPERATIONS	SAFETY
FIRE PROTECTION	RESEARCH SHOP	MAINTENANCE	

SECTION E-E

(Showing Regulating Rod But Not Safety Rods)

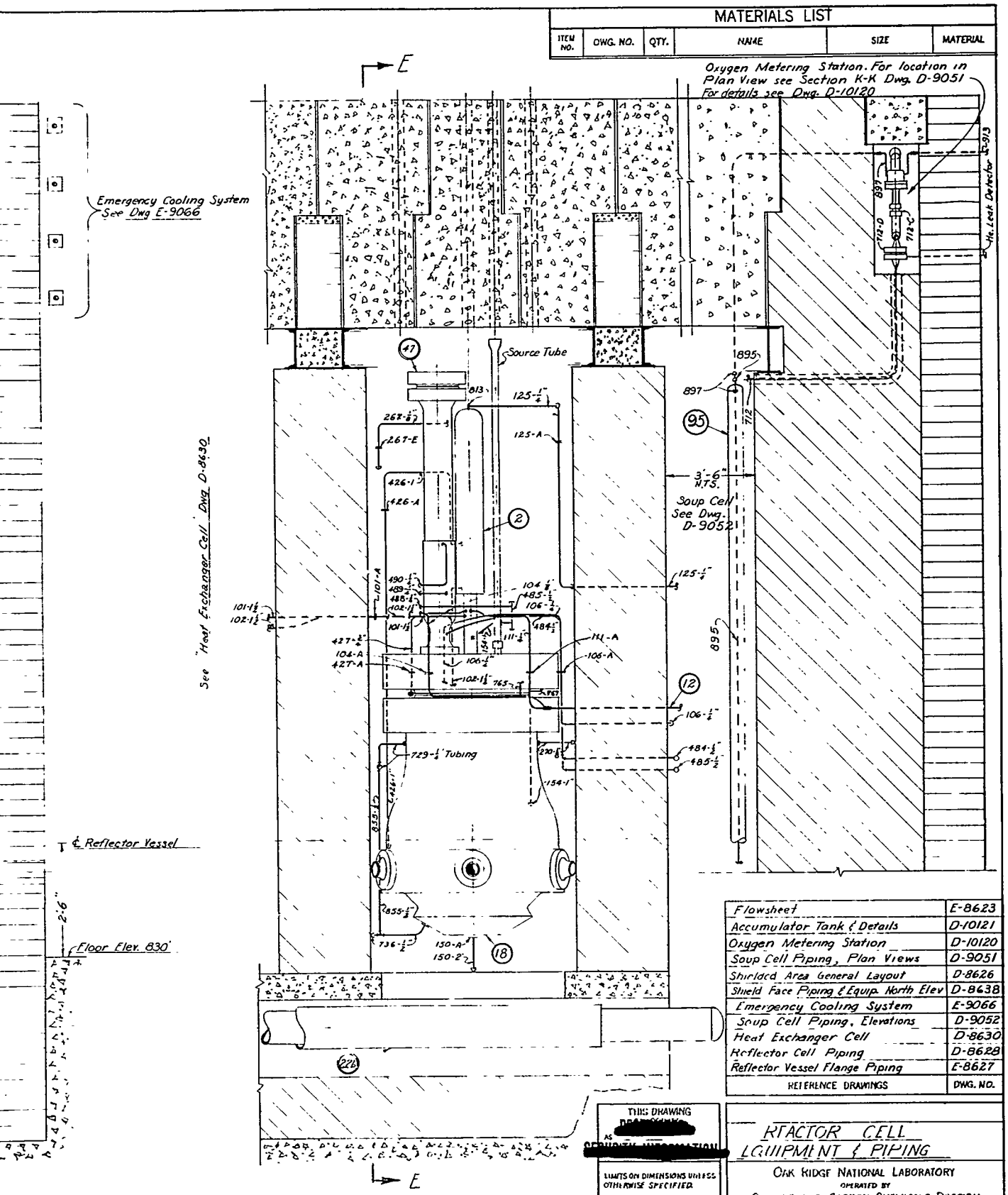
MATERIALS LIST
ITEM NO.
DWG. NO.
QTY.
NAME
SIZE
MATERIAL
Oxygen Metering Station. For location in Plan View see Section K-K Dwg. D-9051 For details see Dwg. D-10120
He. Leak Detector D-913
Emergency Cooling System See Dwg E-9066
See "Heat Exchanger Cell" Dwg D-8630
Source Tube
Soup Cell See Dwg. D-9052
3'-6" N.T.S.
729-¼" Tubing
℄ Reflector Vessel
Floor Elev. 830'
2'-6"
SECTION "F F"
(Showing Source Tube And Cell Safety Rod)
Flowsheet E-8623
Accumulator Tank & Details D-10121
Oxygen Metering Station D-10120
Soup Cell Piping, Plan Views D-9051
Shielded Area General Layout D-8626
Shield Face Piping & Equip. North Elev D-8638
Emergency Cooling System E-9066
Soup Cell Piping, Elevations D-9052
Heat Exchanger Cell D-8630
Reflector Cell Piping D-8628
Reflector Vessel Flange Piping E-8627
REFERENCE DRAWINGS
DWG. NO.
THIS DRAWING [redacted]
LIMITS ON DIMENSIONS UNLESS OTHERWISE SPECIFIED
FRACTIONS ±
DECIMALS ±
ANGLES ±
SCALE: ¼" = 1'-0"
REACTOR CELL EQUIPMENT & PIPING
OAK RIDGE NATIONAL LABORATORY
OPERATED BY
CARBIDE AND CARBON CHEMICALS DIVISION
UNION CARBIDE AND CARBON CORPORATION
OAK RIDGE, TENNESSEE
SUBMITTED
ACCEPTED
APPROVED
W.O. 380638
D-9595

FIG. 2.1.1D

The total volume of the soup in the main system will be approximately 73.1 liters. The volumes of each component in the system are as follows:

ITEM	HOLD-UP VOLUME IN LITERS
Core	50.0
Pressurizer and Core Leg.	6.2
Main Heat Exchanger	5.5
Circulating Pump	1.3
Pipes in Circulating System	8.8
Dump Line Above Dump Valve	0.7
Oxygen Surge Tank	0.6
TOTAL	73.1

2.1.2a The Reactor Core (Item 1)

PURPOSE:

To contain the uranyl sulfate solution in which the nuclear reaction takes place. This is the "Heart" of the reactor.

DESCRIPTION:

The core tank is a thin-walled spherical shell with a tangential inlet, concentric gas and liquid outlets at the top, and a liquid discharge opening at the bottom. The volume of the core is 50 liters, and the flow rate through the core is approximately 100 gpm.

BASIS OF DESIGN

Core Tank Geometry:

A spherical shaped tank provides the least surface area to volume ratio, thereby providing the most favorable vessel from a nuclear standpoint. For a given radius and pressure the wall thickness required for a spherical vessel is one-half of that required for a comparable cylindrical vessel. In view of these facts, and that a spherical tank of this size is no harder to fabricate than a cylindrical tank, the core tank was specified as a sphere of 50 liters capacity.

Inlet

The soup flow rate, and desired pressure drop, determined the entrance line size. Exact location and inlet angle of the tangential opening was determined by 1) ability to remove the core tank assembly by lifting it through the reflector vessel flanged neck opening, and 2) actual experimentation with full scale plastic models.

Top Outlet

The outlet opening was chosen as large as practicable to minimize the pressure drop across the core tank.

Bottom Outlet

As short a radius as possible was used for the 1/4" pipe outlet at the bottom of the core tank to minimize the amount of liquid remaining in the pipe when the bulk of the line fills with gas formed by radiation decomposition of the soup. Minimizing the liquid volume reduces the effect of this line on pressure oscillations in the core.

MATERIAL:

The entire vessel is made of stainless steel Type 347. All welding is inert gas arc, with inert gas flow maintained in interior of vessel during welding. All joints have full penetration welds.

DIMENSIONS:

Diameter: 18" I.D. sphere

Tolerances:

Out of spherical ± 1/16"
Out of round normal to vertical axis ± .020" on diameter
Concentricity to vertical centerline ± .010"

Wall thickness: 3/16"

Limits: .188" min., 1/4" max.

Centerline of soup inlet at connection to sphere:

Angle with horizontal plane = 30° ± 1/2°
Angle with vertical plane thru core centerline and nozzle connection = 45° ± 1/2°

CONNECTIONS:

Description	Pipe No.	Size	Schedule	Operating Press.	Operating Temp.	Fluid Velocity	Connection Reinforcement
Press. Pipe	-	3" NPS	80	1000 psi	482°F	0	7" O.D. x 1/4" thick collar
Soup Inlet	102	1-1/2" NPS	80	1000 psi	405°F	18.7 fps.	Weld Only
Soup Outlet	101	1-1/2" NPS	80	1000 psi	482°F	18.7 fps.	Conc. with Press. Pipe
Dump Line	106	1/4" NPS	80	1000 psi	405°F	0	Weld Only
Gas Outlet	104	1/8 NPS	80	1000 psi	482°F	1 gpm	Conc. with Soup Outlet

PRESSURE:

Operating pressure: 1000 psi inside } simultaneous pressures
1020 psi outside

Internal pressure: allowable = 560 psi (ASME Code 1950)
Test = 1000 psi (Hydrostatic)
bursting: (no reflector)(75,000 psi ultimate for stainless steel) = 2950 psi

External pressure: allowable: approximately 440 psi

crushing: approximately 800 psi

Pressure protection for sphere:

2000 psi rupture discs in both the soup and reflector systems. Interlocked soup and reflector dump systems.

THERMAL EFFECTS:

Operating temperature = 482°F (250°C)

Neutron and gamma absorption plus temperature diff. = 24,450 psi at 100°C refl. temp. (increased to 175°C to reduce this stress below 18,000 psi)

Forces on sphere due to thermal expansion in connected piping:

Pressurizer:	6000 lb.
Soup inlet:	500 lb.
Dump line:	5500 lb.

Core deflection due to thermal expansion of connected piping:

Vertical = 0.215"
Horizontal = 0.057"

Change in core diameter due to thermal expansion:

0.036" on diameter
0.018" on radius

Total maximum horizontal displacement

0.057 + 0.018 = 0.075"

LOCATION:

The reactor core is supported within the reflector vessel (Item 18) by the concentric soup and gas outlet piping which in turn hangs from the top flange of the reflector vessel. The horizontal centerline of the core is coincident with the centerline of the spherical portion of the reflector vessel, and is located 2'-6" above the 830 ft. floor elevation.

ACCESSIBILITY:

One day after shutdown (5.29×10^{15} n/sec. absorbed)(normal permissible daily dose = 60 mr or 7.5 mr/HR)

Position	Dose Rate (mr/HR)
At 50 ft. - unshielded	9800
At 50 ft. 7" concrete	120
At 50 ft. 13" concrete	7.5
At 1 ft. (Outside Pressure Vessel)	2960

REFERENCE DRAWINGS:

Fabricated and installed as per drawings:

No.	Rev. No.	Title
D-7568	5	Core Tank Details - Sheet #1
D-8314	2	Core Tank and Flange Assembly
D-8614		Spiral Inlet Pipe
D-10113	1	Core Tank Assembly
D-10114		Core Tank Details - Sheet #2
E-8627		Reflector Vessel Flange Piping

2.1.2b The Reactor Core Neck Assembly (Item 1 on Dwg. E-8623)

PURPOSE:

To provide an outlet for the gas generated in the core tank, a discharge opening for the circulating soup, and a connection to the pressurizer.

DESCRIPTION:

Three concentric openings, consisting of a 1/8" schedule 80 pipe within a 1-3/4" O.D. x .095" wall tube within a 3" schedule 80 outside pipe, make up the core neck assembly as shown by Figure 2.1.2A.

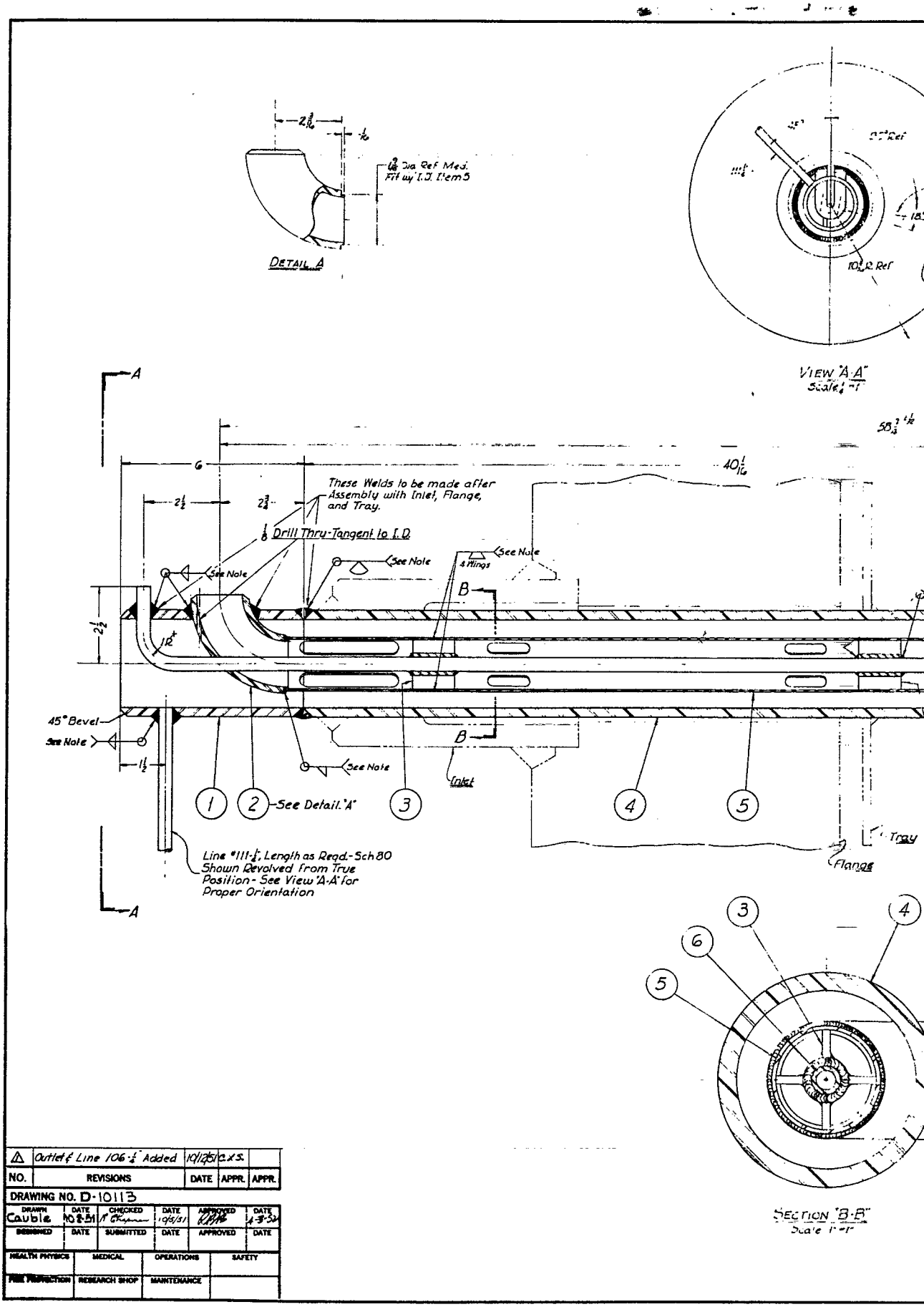

NO.	REVISIONS	DATE	APPR.	APPR.
△	Outlet & Line 106-1/4 Added	10/12/51	C.X.S.	

DRAWING NO. D-10113

DRAWN	DATE	CHECKED	DATE	APPROVED	DATE
Cauble	10-8-51	[illegible]	10/5/51	[illegible]	4-3-52
DESIGNED	DATE	SUBMITTED	DATE	APPROVED	DATE

HEALTH PHYSICS	MEDICAL	OPERATIONS	SAFETY
FIRE PROTECTION	RESEARCH SHOP	MAINTENANCE	

MATERIALS LIST					
ITEM NO.	DWG. NO.	QTY.	NAME	SIZE	MATERIAL
1	This Dwg.	1	Pipe, Seamless	3" Sch 80 x 6" Lg	SSt 347
2	Stock	1	90° Ell, Long Radius	1½" Sch 80	
3	D-10114	2	Supporting Web	See Detail	
4	This Dwg	1	Pipe, Seamless	3" Sch 80 x 40½ Lg	
5	D-10114	1	Inner Tube	1⅜" O.D. x .085 Wall	
6	Stock	1	Pipe, Seamless	½" Sch 80 x 47⅞ Lg	
7	D-10114	1	Adapter	See Detail	
8	D-10114	1	Vaned Nose	See Detail	
9	D-7568	1	Spherical Tank Assembly	See Detail	

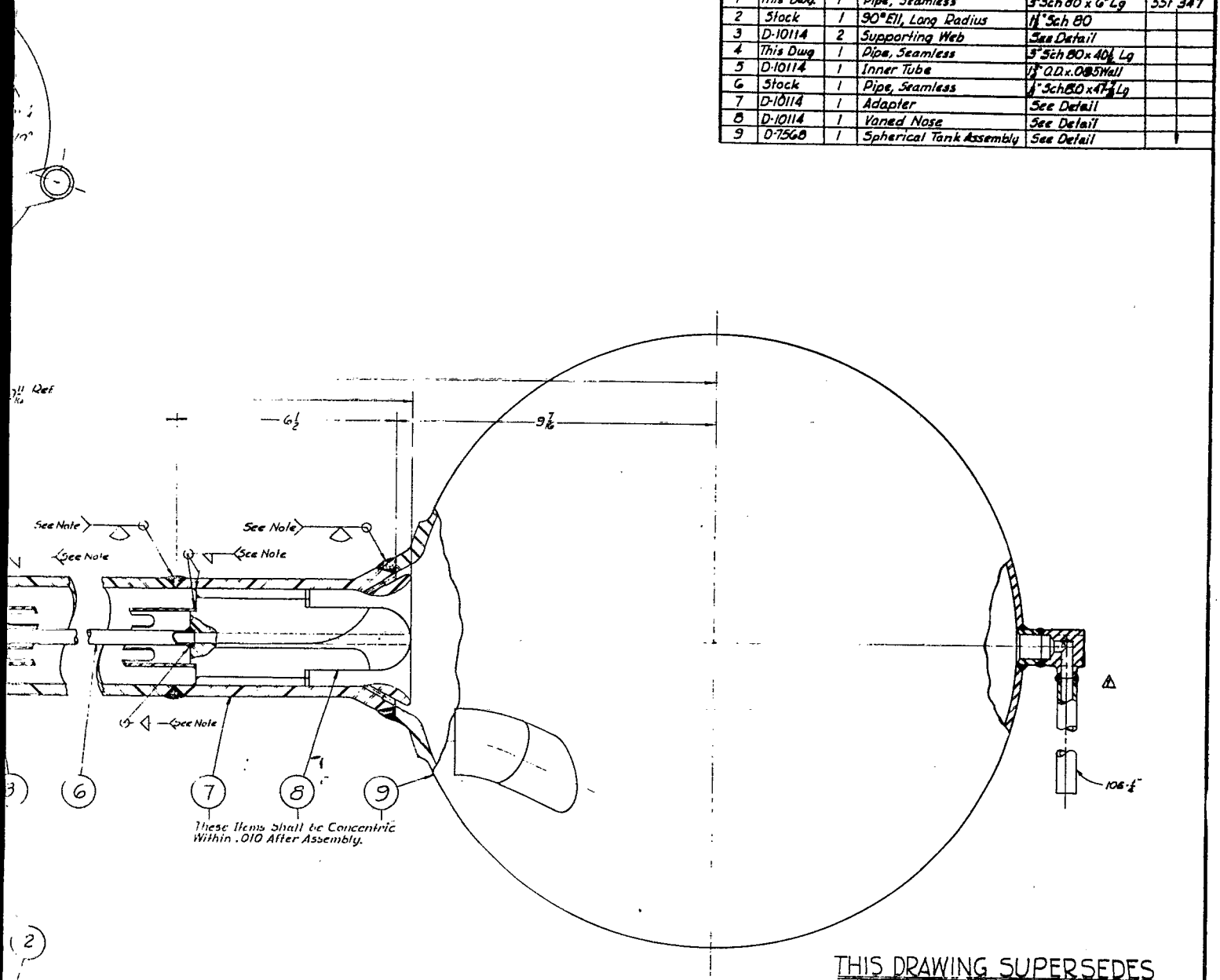

THIS DRAWING SUPERSEDES DRAWING D-10106

Note: All Welding shall be Inert Gas Arc, with Inert Gas flow maintained in interior of Vessel during welding. All Pipe Joints shall have full penetration, and complete Assembly shall withstand 1000 PSI Internal pressure.

REFERENCE DRAWINGS	DWG. NO.
Reflector Vessel Flange Piping	E-8627
Reflector Tray and Inlet Details	D-8315
Core Tank and Flange Assembly	D-8314
Core Tank Details-Sheet #2	D-10114
Core Tank Details-Sheet #1	D-7568

FIG. 2.1.2A

H.R.E. EQUIPMENT Bldg 7500

CORE TANK ASSEMBLY

OAK RIDGE NATIONAL LABORATORY
OPERATED BY
CARBIDE AND CARBON CHEMICALS COMPANY
A DIVISION OF UNION CARBIDE AND CARBON CORPORATION
OAK RIDGE, TENNESSEE

THIS DRAWING [redacted]
PER Segasrv
SCALE: ½" = 1" Unless Noted

SUBMITTED	ACCEPTED	APPROVED
	P.E. Winters	

W.O. 380638 D-10113 1

The outside 3" pipe assembly is 53 inches long, and is made of three pieces to simplify machining, assembling and welding operations. The bottom adapter piece has a flared end which is welded to the core tank top opening, and a flared inside 2-9/16" I.D. lip located 9" above the core tank horizontal centerline which acts as the circulating soup outlet. At a point 13-1/2" above the reflector top flange closure the 3" pipe assembly is welded to the pressurizer leg. A 1/4" soup inlet line (No. 111) is welded to the 3" pipe 12" above the top flange closure. A vaned nose piece is welded inside the 3" adapter; is concentric with (and begins at) the outlet opening; and has a 1/4" diameter central hole which forms the gas outlet. The nose piece has a spherical end (15/16" radius), four vanes, and four 3-5/16" long wings which are welded to the adapter section of the 3" pipe assembly. A 47-7/8" length of 1/8" schedule 80 pipe is welded to the vane end of the 6-1/2" long nose piece to form the complete gas outlet line. This pipe passes through an elbow welded to the 1-3/4" tubing, and then has a 90° bend which passes through the 3" pipe wall 62" above the core tank centerline to become line 104 as shown on drawing E-8623.

A 1-3/4" O.D. x 41-3/16" long tube is also welded to the vane end of the nose piece, and an elbow welded to the top end of the tube passes through the 3" outer pipe wall 10" above the top flange closure where it becomes line 101 which is in the main soup circulating loop. Sixteen 1-3/8" x 1/2" and four 3-1/4" x 5/8" slots perforate the tube, and two supporting webs are welded between the tube and the 1/8" central gas pipe.

MATERIAL:

Type 347 stainless steel was used throughout in fabricating the core neck assembly.

BASIS OF DESIGN:

Outlet Adapter.

The outlet opening was chosen as large as practicable to minimize the pressure drop across the core tank. A groove was machined in the lip to insure a full penetration weld, and two 1/8" diameter holes were drilled through this groove to permit the escape of any gas which may accumulate in the groove.

Vaned Nose.

The spherical end of the vaned nose piece was made as large as possible keeping in mind a reasonable annulus for fluid

flow. Since the gas vortex "runs" on the spherical nose surface, the larger the nose the larger the vortex it is capable of supporting.

Four vanes are machined in the plug to help straighten the rotational flow of the soup leaving the core, and thereby convert the velocity head back to pressure head. The 1/4" central hole was chosen to provide support for the smallest vortex normally expected.

Tube.

The tube was perforated to present a larger liquid surface area for viscous dampening of abrupt pressure surges due to sudden increase in reactivity. The tube diameter was selected so that the hydraulic radii of the inner channel and annulus are equal (0.288" in this case). A 1/8" diameter hole is drilled through the 90° elbow to provide an outlet for any entrained gas. Supporting webs and all welded construction are used to minimize mechanical vibrations.

Since good separation depends on smooth surfaces and concentricity of the components, all surfaces coming in contact with soup and gas leaving the core are carefully machined and all sharp edges are broken. Most of the design criteria for the core neck assembly were arrived at by actual experimentation with full scale, clear plastic, models.

LOCATION:

The greater portion of the core neck assembly is located within the reflector vessel with approximately 13-1/2" of the neck extending above the top flange closure.

ACCESSIBILITY:

See Table 3.6A of section 3.6, Chapter 3 on HRE Shielding.

REFERENCES:

The core neck assembly was fabricated and installed as per drawings:

D-10113	Core Tank Assembly	
D-10114	Core Tank Details	sheet # 2

2.1.3a The Circulating Pump (Items 4 & 5 on E-8623)

Item 4 - Soup Pump

PURPOSE:

To circulate soup at 1000 psi pressure through the core tank and the main heat exchanger in a totally enclosed system.

DESCRIPTION:

Figure 2.1.3A shows the construction of the Westinghouse Model 100A canned rotor centrifugal pump which is used to circulate soup in the HRE. The pump was developed for the Naval Reactor Program, and is designed for 100 gpm. at 88 psi head with 2000 psi inlet pressure and 600°F water. The HRE operates at 1000 psi and 482°F (250°C). In general, these pumps will deliver 135 to 140 gpm at 80 psi, and at a water temperature of 68°F. The pump and motor are totally enclosed by welding, and the motor is oil cooled.

To determine the head for any water temperature, t, multiply the head at 68°F by the ratio of the density at "t" to the density at 68°F. The capacity may be considered constant within the temperature range 68°F to 600°F. Neither the motor input current nor input power should be used as a measure of pump performance. The pump bearings operate totally submerged, and a small stream of water (1 gph) is pumped into the rotor cavity during normal operation. The system pressure must be maintained greater than the soup saturation pressure at the system temperature to prevent cavitation at the pump impeller. The absolute inlet pressure should be greater than 15 psia at all times, to prevent local boiling in the bearing lubricating films. Any gas liable to become entrapped in the rotor cavity should be vented. Vent and drain tubes are provided.

Investigation has shown that the bearings as designed are not capable of withstanding possible thrust loads developed by the pump. The present solution developed by Westinghouse is the addition of welded pads on the front and rear surfaces of the impeller housing. With these pads it is possible to eliminate the thrust load on the bearings by proper location of the impeller. However, there are two distinct disadvantages to this method: (1) The thrust pads are close to the impeller and areas of high velocity and turbulence are created with a resulting increase in the corrosion rate, and (2) there is no guarantee that the thrust load is permanently eliminated. Wear or corrosion around the impeller seal rings changes the hydraulic thrust balance. Thus, a pump initially balanced with respect to thrust may become

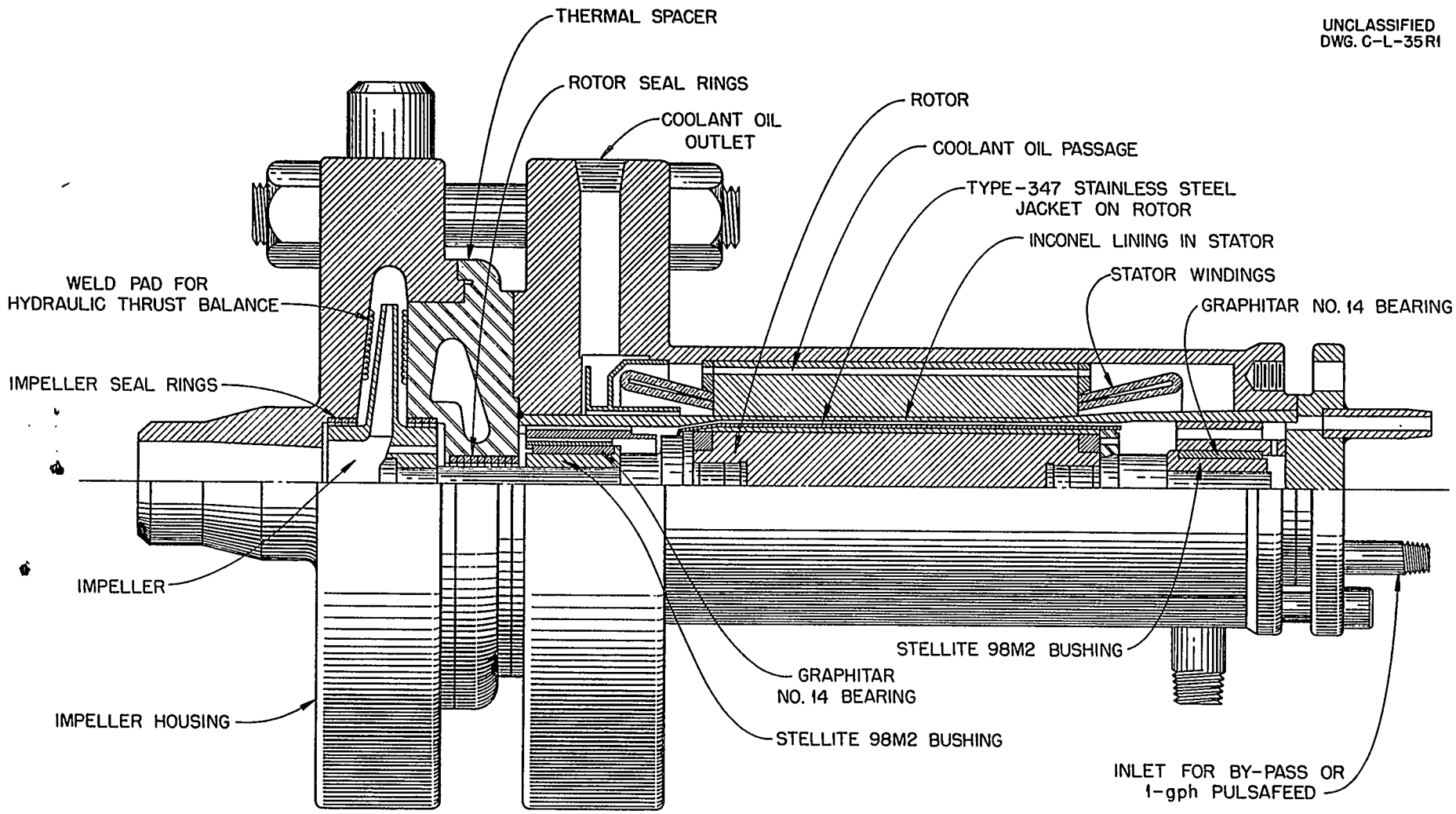

FIG. 2.1.3A

Modified Model 100-A Soup Pump

unbalanced enough to cause bearing wear after a period of operation. An extensive pump development program is now in progress with emphasis on metal bearings, reduction of thrust loads, and self-aligning bearing design.

MATERIALS:

Several material substitutions were made before the pump was considered suitable to handle corrosive soup. The first pump installation in the 7500 building had the following material substitutions.

1) Titanium carbide journal bushings were not satisfactory since the nickel binder used is attacked in the HNO_3 passivation treatment. These bushings were replaced with Stellite 98M2 material.

2) The nickel labyrinth discs were replaced with tantalum for the same reason as in (1) above.

Other materials in contact with the soup circuit are as follows:

Casing and impeller	Type 347 stainless steel
Shaft	Squirrel cage type; copper base in a soft-iron core with a can of 347 stainless steel welded over the assembly.
Motor barrier sleeve	Inconel (wrought)
Bearings	Graphitar No. 14

Early chemical results indicated that carbon was detrimental to solution stability; however, the accumulated experimental evidence shows no apparent difference in solution stability or the amount of oxygen required in loops with and without Graphitar pump bearings.

LOCATION:

The soup circulating pump is located at the south end of the heat exchanger cell at an elevation of 6'-8" above the ground elevation of 830 ft. as shown on Figure 2.13-A (Dwg. D-8630).

BASIS OF DESIGN:

The main reason for using the Westinghouse pump was its ability to

circulate fluid at high pressure in a totally enclosed system.

Figure 2.1.3B shows the performance curves of the 100A pump with the calculated system pressure drop superimposed. This curve shows that the pump will operate at 117.5 gpm against a system pressure drop of 84.5 psi with the fluid temperature at 482°F (250°C).

GENERAL INFORMATION:

Motor	220 volts, 3 phase, 60 cycles at 68°F water temperature
	H.P. ---------- 12
	F.L. amps---------- 45
	Head ---------- 128 psi
	Capacity ---------- 100 gpm
Pump	Rating at 2000 psi and 600°F
	Capacity ---------- 100 gpm
	Head ---------- 88 psi
	RPM ---------- 3400
Motor cooling oil	Max. temp. ---------- 35°C
	Internal oil pressure drop ------- 10 psi
	Heat removal -------- 20,000 btu/hr

Radiation Damage to Cooling Oil

Based on samples exposed in the X-10 pile and an estimate of radiation intensity in the Westinghouse pump, the life of the pump-cooling oil was predicted to be 4.63V days, where V is the volume of the oil system in liters. Inasmuch as the volume will be in the neighborhood of 80 liters, the life of the oil will be about a year. Semi-annual oil changes would ensure satisfactory operation.

ACCESSIBILITY: One day after shutdown

Soup Pump:

Neutrons absorbed --- 2.76×10^{10} n/sec
Position ---------- at 1 ft
Biological dose rate ---------- 45 mr/hr

Dwg. 16208

[redacted]

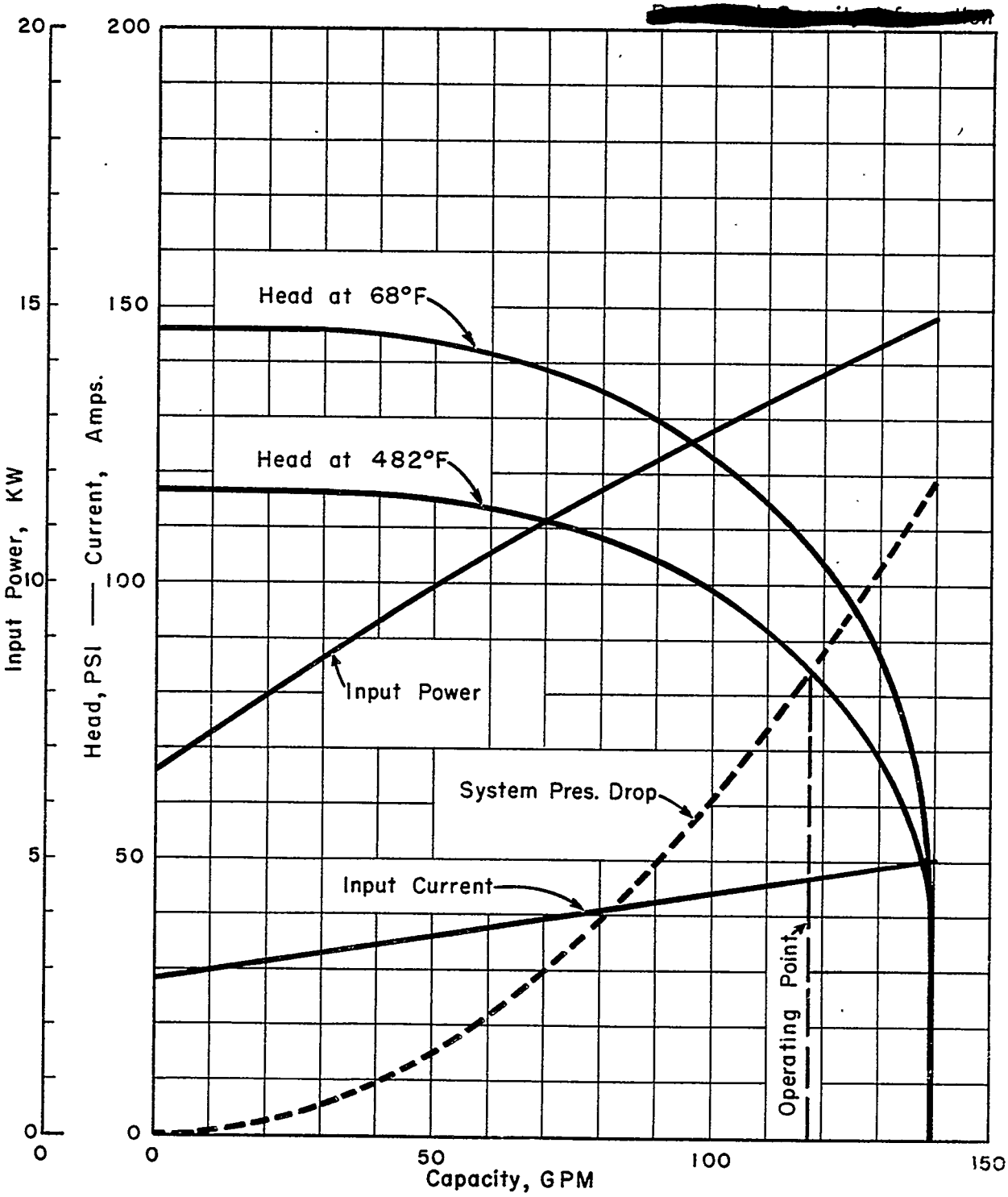

Fig. 2.1.3B. Performance Curves—Model 100-A W. Pump

REFERENCE MATERIAL:

An instruction book issued by Westinghouse (No. 7507-A) entitled "Totally Enclosed Centrifugal Pumps - Model 100 and 100A," March 1950, contains information on application, installation, operation, and maintenance.

Ref. Drawings:

Westinghouse No. 32-A-2667 - High Pressure Pump Without Gaskets - General Assembly Model 100A

Westinghouse No. 32-A-2669 - Outline Dwg. Model 100A

The pump was installed as per ORNL drawing D-8630 - Heat Exchanger Cell - Piping and Equipment Plan and El.

2.1.3b Soup Pump Oil Cooling System (Item 5 on E-8623)

PURPOSE:

To supply the soup pump motor with cooling oil and to remove the heat from the oil.

DESCRIPTION:

The system consists of a packaged unit composed of an oil pump, oil pump motor, heat exchanger, storage tank, pressure gage, and pressure limit switches.

MATERIALS:

All parts of the system are made from ordinary steel. The pump and heat exchanger are commercial products and are listed below.

LOCATION:

The soup pump oil cooling system is located in a separate cell located just south of the Heat Exchanger cell at an elevation of approximately 15 ft above the floor elevation of 830 ft.

BASIS OF DESIGN

Motor cooling oil:

Max. temp. --------- 35°C
Internal oil
pressure drop ------ 10 psi
Heat removal ------- 20,000 btu/hr

Oil Pump and Motor - Geo. D. Roper Gear Type # 25F20 equipped with 1 HP motor

Heat Exchanger - Ross # 7M5012-A, BCF exchanger (water cooled)

Pres. ratings:	Design	Test
Shell side.....	225 psi	450 psi
Tube side	150 psi	300 psi

Surface area - 9 ft^2

Storage Tank - fabricated as per Dwg. D-8618

Capacity - 10 gallons

Magnetic drain plug at base of tank

Safety Valve - Crane No. 1128 - set at 300 psi

Pressure Switches - Brown Cat. No. L604A-10-300 psi Mercury Switches

REFERENCE DRAWINGS

System fabricated and installed per drawings:

D-8617 - Assem. Soup Pump Oil Cooling System.

D-8618 - Soup Pump Oil Cooling System - Details.

D-8630 - Heat Exchanger Cell - Piping and Equip. - Plan & El.

D-8631 - Heat Exchanger Cell - Piping and Equip. - Sections.

2.1.4 THE MAIN HEAT EXCHANGER (Item 3 on E-8623)

PURPOSE:

To provide the heat transfer surface for removal of energy released in the reactor core. The transferred heat is used to generate steam which in turn is utilized to drive a turbine-generator set.

DESCRIPTION:

The exchanger is a shell and U-tube type steam generator (as shown in Fig. 2.1.4A and in the heat exchanger cell Fig. 2.1.4B) designed to produce 3025 lbs/hr of 200 psia saturated steam at a heat load of 1000 kw. The reactor solution is passed through

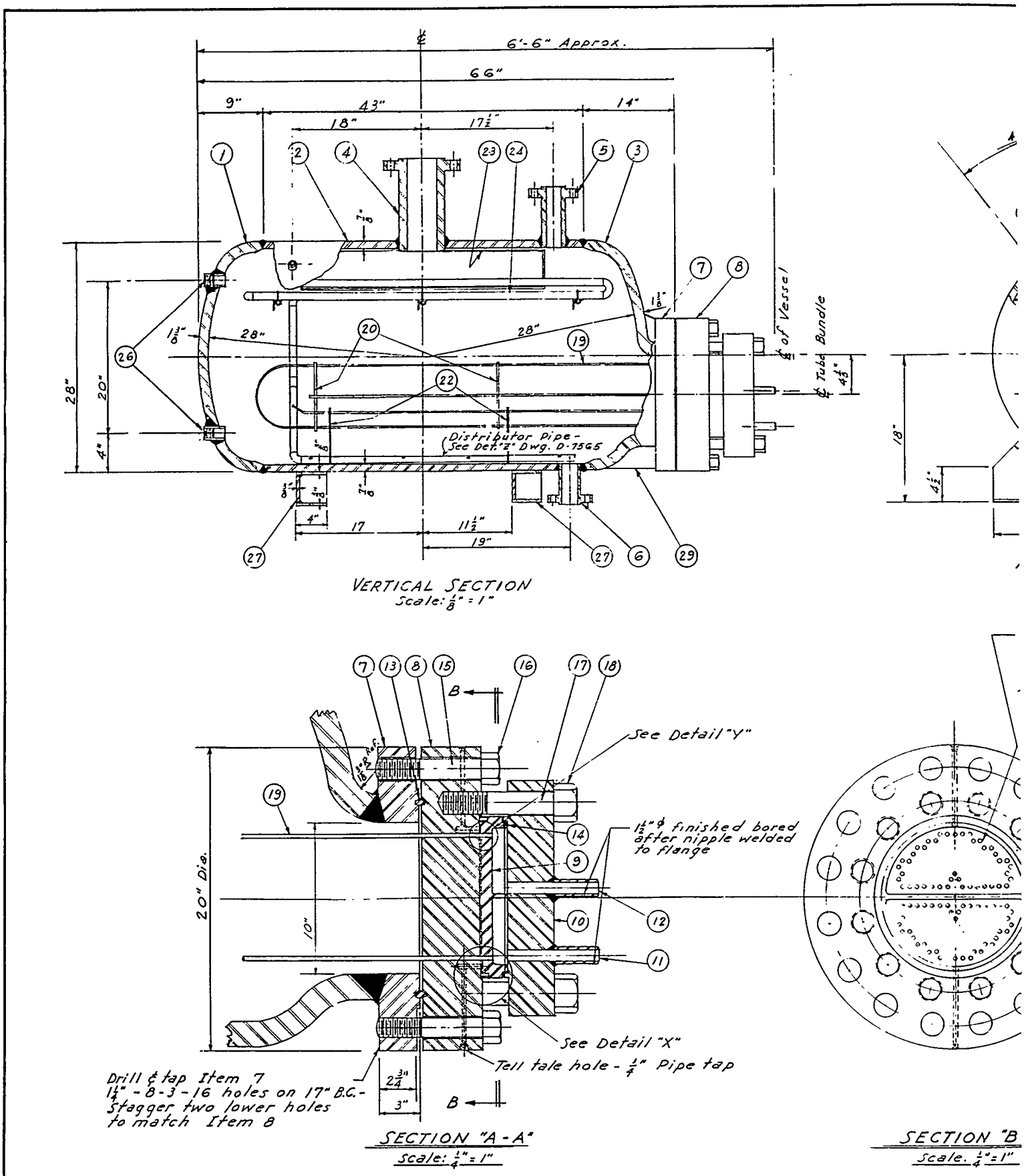

NO.	REVISIONS	DATE	APPR.	APPR.
DRAWN J.C.B. DATE: 7-12-50	DESIGNED A.H.G. D.T. Jones DATE: 7-11-50	CHECKED W. Terry DATE: 7-21-50	APPROVED J. Mau Roberton 7/21/50	
HEALTH PHYSICS	MEDICAL	OPERATIONS	SAFETY	
FIRE PROTECTION	RESEARCH SHOP	MAINTENANCE		

Fig. 2.1.4A

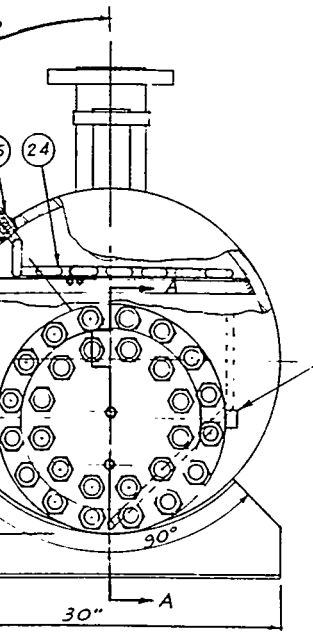

29 1" Stl Plate Gussets to Reinforce Opening Flange, Item 7.

OZZLE END VIEW
Scale: 1/8" = 1"

0.D.x18 B.W.G (0.049 Wall) Type
47 Seamless Stainless
teel tubing, on .500" Centers
60° triangular spacing.
verage effective heat
ansfer length 110". -
2 required.

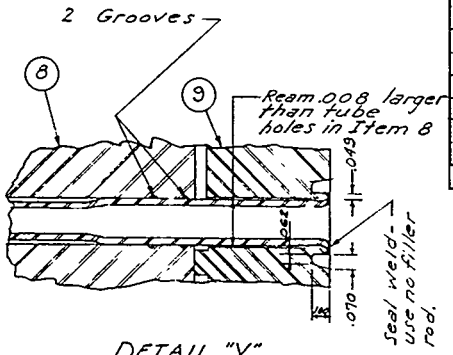

DETAIL "Y"
Tube Joints - Note Clearance
Between Expanded Tube & S.S. Tube Sheet
Scale: 2" = 1"

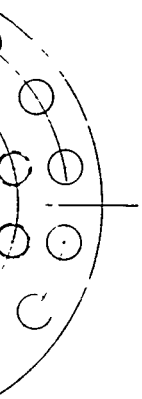

3"

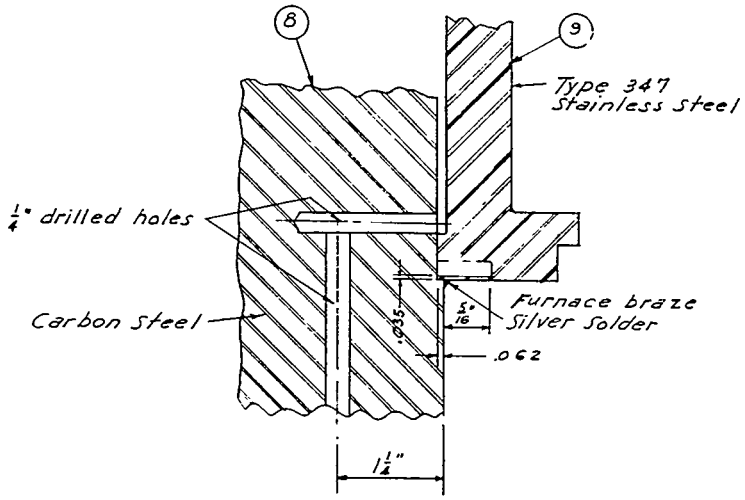

DETAIL "X"
Scale: 1" = 1"

MATERIALS LIST

ITEM NO.	DWG. NO.	QTY.	NAME	SIZE	MATERIAL
1	D-7559	1	Rear Flanged &Dished Heads-ASME Code	28" O.D.	ASTM A212B
2	D-7559	1	Shell	28 O.D. x 7/8"	ASTM A212B
3	D-7559	1	Front Flanged&Dished Head; ASME Code	28" O.D.	ASTM A212B
4	D-7559	1	Welding Neck Nozzle	4" ϕ - 600	ASTM A105
5	D-7559	1	Welding Neck Nozzle	2" ϕ - 600	ASTM A105
6	D-7559	1	Welding Neck Nozzle	1½" ϕ - 600	ASTM A105
7	D-7559	1	Flange Ring		ASTM A-212B
8	D-7564	1	Tube Sheet		ASTM A-212B
9	D-7564	1	Tube Sheet		Stainless Steel 347
10	D-7564	1	Distributor		Stainless Steel 347
11	D-7559	1	Inlet	1½"Sch 80 x 3" lg.	SS 347
12	D-7559	1	Outlet	1½"Sch 80 x 3" lg.	SS 347
13	D-7559	1	Gasket	R 53	Crane Type C Octagonal
14	D-7564	1	Gasket	Metallic	Gasket Co.New Brunswick N.J. SS347 Annealed
15	D-7559	16	Stud Bolts	1¼"x9"-8 t.:-3	ASTM A193B7
16	D-7559	16	Nuts	(Heavy) 1¼"-8tpi-2	ASTM A194-2H
17	D-7559	12	Stud Bolts	1½"x 10"-8tpi-3	ASTM A193B7
18	D-7559	12	Nuts	(Heavy) 1½"-8tpi-2	ASTM A194-2H
19	D-7559	112	U-Tubes	¾" O.D.x0.049" Wall	SS-347
20	D-7564	2	Tube Bundle Support Plates	¼" Plate	Mild Steel
21	D-7564	4	Tube Bundle Support Rails	½" Rounds	Mild Steel
22	D-7564	2	Tube Bundle Support Saddles	¼" Plate	Mild Steel
23	D-7565	1	Dry Pipe	5"Boiler Tube 0.148"Wall	ASTMA83
24	D-7565	1	Feed Water Heater Fabricated	50'lg.½"O.D.x0.035"Wall	SS347 Tubing
25	D-7559	1	Reducer	1" x ½"IPS-Crane # 387	Steel
26	D-7559	2	Couplings	1" IPS-Crane # 386	Steel
27	D-7559	2	Vessel Supports	3/8" Plate	Mild Steel
28	D-7564	1	Tube Bundle Tie Rod	½" Round	Mild Steel
29	D-7559	4	Gussets	1" Plate to fit	ASTM A212B
30	D-7564	2	Spacers	½" IPS Sch. 40	Steel

General Notes
1.- Unthreaded portions of stud bolts (Items 15 & 17) must be turned down to Root Dia. of threads.

REFERENCE DRAWINGS	DWG. NO.
EXPERIMENTAL STM. GENERATOR DET. SH. 1	D-7564
" " " " SH. 2	D-7565

H.R.E. EQUIPMENT BLDG. 7500

EXPERIMENTAL STEAM GENERATOR

THIS DRAWING CLASSIFIED [redacted]

BY [illegible]

LIMITS ON DIM. UNLESS OTHERWISE SPECIFIED
FRACTIONS ± 1/64
DECIMALS ± .005
ANGLES ± ½°

SCALE: AS NOTED

OAK RIDGE NATIONAL LABORATORY
OPERATED BY
CARBIDE AND CARBON CHEMICALS DIVISION
UNION CARBIDE AND CARBON CORPORATION
OAK RIDGE, TENN.

SUBMITTED	ACCEPTED	APPROVED
[illegible]	C. Winters	[illegible]
WD. 380638		D-7559

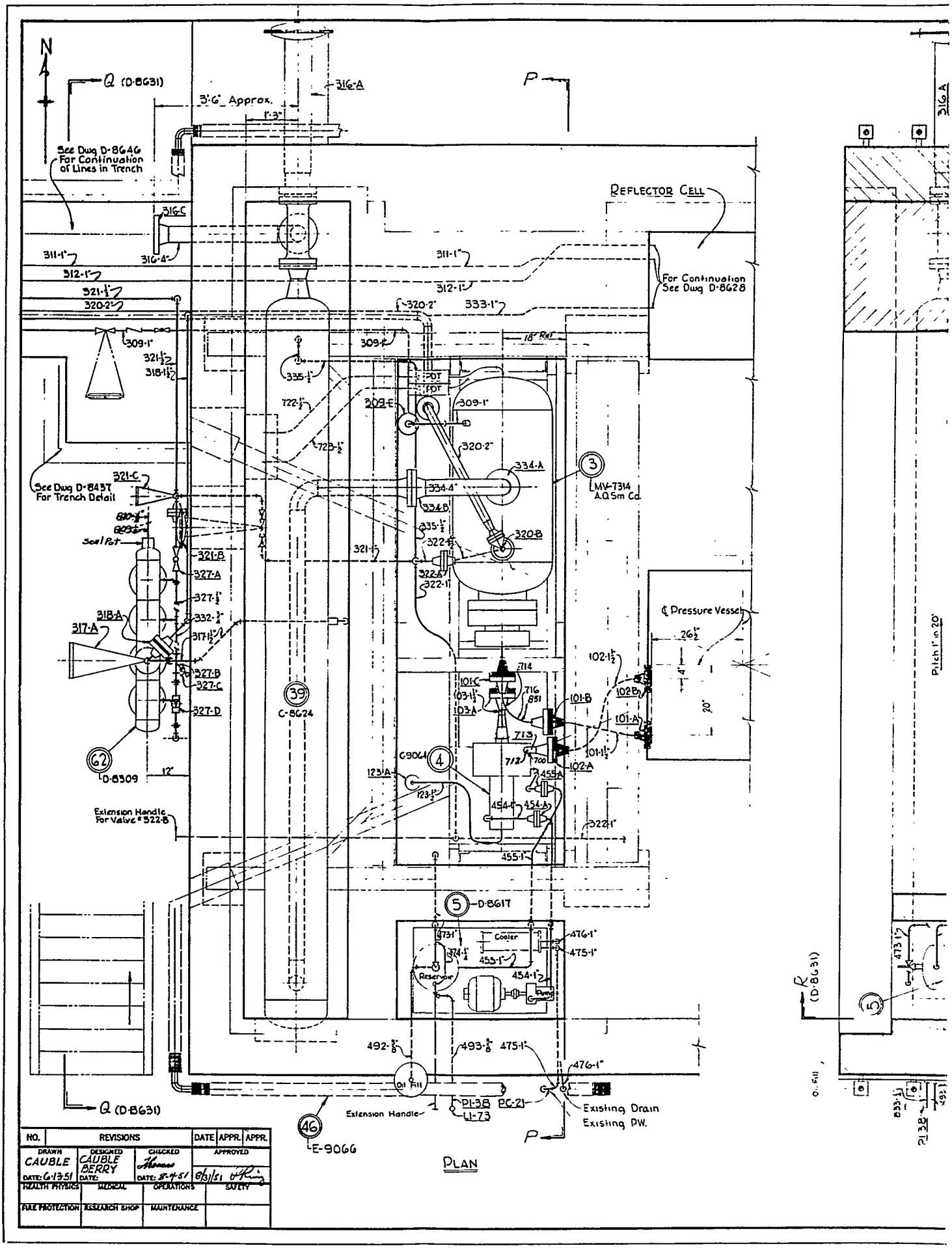

NO.	REVISIONS		DATE	APPR.	APPR.
DRAWN CAUBLE DATE: 6-13-51	DESIGNED CAUBLE BERRY DATE:	CHECKED [signature] DATE: 8-4-51	APPROVED 8/31/51 [signature]		
HEALTH PHYSICS	MEDICAL	OPERATIONS	SAFETY		
FIRE PROTECTION	RESEARCH SHOP	MAINTENANCE			

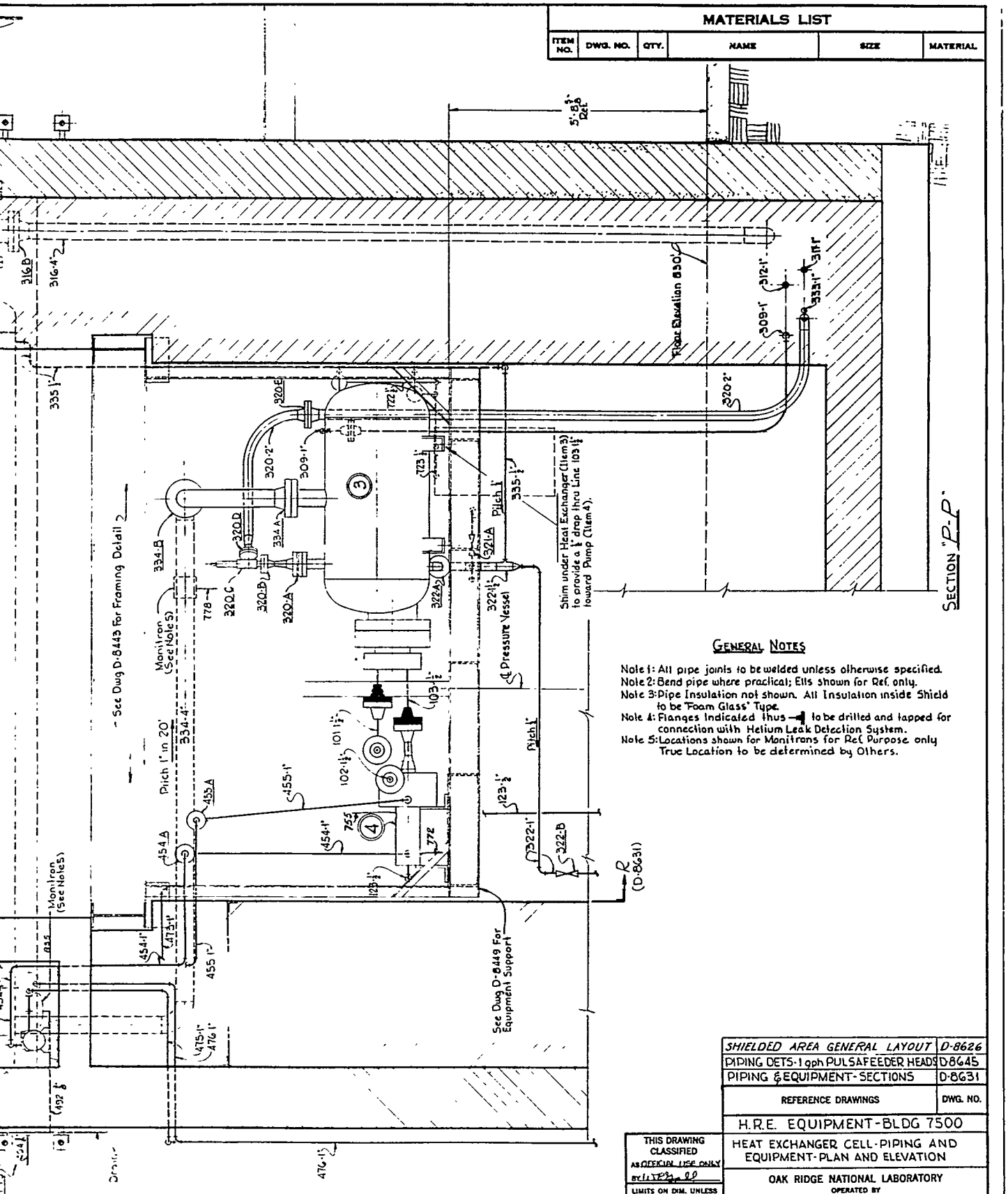

General Notes

Note 1: All pipe joints to be welded unless otherwise specified.
Note 2: Bend pipe where practical; Ells shown for Ref. only.
Note 3: Pipe Insulation not shown. All Insulation inside Shield to be "Foam Glass" Type.
Note 4: Flanges Indicated thus —▮ to be drilled and tapped for connection with Helium Leak Detection System.
Note 5: Locations shown for Monitrons for Ref. Purpose only True Location to be determined by Others.

REFERENCE DRAWINGS	DWG. NO.
SHIELDED AREA GENERAL LAYOUT	D-8626
PIPING DETS-1 gph PULSAFEEDER HEADS	D-8645
PIPING & EQUIPMENT-SECTIONS	D-8631

H.R.E. EQUIPMENT-BLDG 7500

HEAT EXCHANGER CELL-PIPING AND EQUIPMENT-PLAN AND ELEVATION

OAK RIDGE NATIONAL LABORATORY
OPERATED BY
CARBIDE AND CARBON CHEMICALS CORP.
FOR THE
ATOMIC ENERGY COMMISSION
OAK RIDGE, TENNESSEE

THIS DRAWING CLASSIFIED AS OFFICIAL USE ONLY BY W.T. Gall

LIMITS ON DIM. UNLESS OTHERWISE SPECIFIED
FRACTIONS
DECIMALS
ANGLES
SCALE: 3/4" = 1'-0"

SUBMITTED: [signature] WRS
ACCEPTED: [signature]
APPROVED

WO 380638

D-8630

R:

FIG. 2.1.4B

1/4 inch tubes at an average velocity of 15.8 ft/sec in order to provide high heat flux with a minimum of liquid holdup.

The amount of heat removal is regulated by varying the throttling of the generated steam. Thus the steam pressure at a pile power of 200 kw is 315 psia, while at 1000 kw the pressure is reduced to 200 psia. An all welded construction is used where soup comes in contact with tube surfaces. Special low holdup headers are provided, and pockets are avoided to facilitate decontamination.

MATERIALS:

Item	Material
Shell	ASTM-A212 Gr. B.
Tubes	Type 347 Stainless Steel Seamless tube per ASTM A-213-46
Tube Sheet (steam side)	ASTM-A-240 Gr. C
Tube Sheet (soup side)	18-8-Type 347 SS
Tube Bundle Support Plate	Mild steel
Bolts	ASTM-A-193-B7. SAE-4140
Nuts	ASTM-A-194-2H SAE-1045
Nozzles	ASTM-A-105-CL-1
Supports	Mild steel

Connections

Steam Outlet	4" NPS schedule 60 welding neck nozzle
Safety Outlet	2" NPS schedule 60 welding neck nozzle
Soup Inlet & Outlet	1 1/2" Schedule 80 NPS (347 SS)
Feedwater Inlet	1" x 1/2" NPS Reducer
Level Indicator Connections	Two - 1" NPS Couplings
Blowdown and Drain Connection	1 1/2" NPS schedule 60 welding neck nozzle

Dimensions:

Overall Length - Approximately 6' - 11 1/4"

Shell:	Inside Diameter	26 1/4"
	Head Thickness	.9" min
	Shell Plates	7/8"
Tubes:	1/4" OD - 18 BWG (.049" wall thickness)	
	Average tube length - 123.8 inches	

BASIS OF DESIGN

Heat Load:		1000 kw (3,415,000 Btu/hr)
Total Soup Holdup		5.5 liters
Velocity of Soup thru Tubes		15.8 ft/sec
Flow of Soup through Tubes		100 gpm
Operating Steam		200 psia (saturated)
Soup Temperature	Inlet	482°F
	Outlet	407°F
Soup Pressure	Inlet	1000 psi
	Outlet	975 psi
Total Heat Transfer Area Based on O.D. of Tubes		75.5 ft^2
Number of U-Tubes		112
Design Pressures:	Tube Side	2000 psig
	Shell Side	600 psig
Test Pressures:	Tube Side	4000 psig
	Shell Side	1200 psig
Design Temperatures:	Tube Side	650°F
	Shell Side	650°F

GENERAL INFORMATION

a. Tube Sheet. Double tube sheet. Tubes rolled to inner sheet and welded to outer sheet, space between serving as leak detection device.

b. Normal Water Level. Three inches above centerline of shell (500 lbs of water).

c. A feedwater heater and dry pipe are located in the steam space.

[redacted]

d. All welded construction - completely stress relieved at 1225 ± 25°F for 1 hr.

e. All welds were radiographed.

f. Approximate weights:

Empty	3200 lbs.
Full	4200 lbs.
Tube Bundle	700 lbs.

g. The vessel was inspected and hydrostatically tested before shipment. The vessel successfully withstood the following hydrostatic tests:

Tube Side	4000 psi for 1 hour
Shell Side	1200 psi for 1 hour

h. The actual pressure drop through the exchanger was measured and found to be 42 psi at a flow rate of 100 gpm and at 70°F. This corresponds to approximately 33.6 psi at 482°F.

i. An inspection report was prepared by the A. O. Smith Company entitled "Steam Generator - serial no. 7314-1 (shop order - 62-305-41)" dated April 26, 1951. This report contains the following:

1. Material record showing the chemical and physical properties of material used in the construction of the vessel.

2. Manufacturers' Data Report.

3. Hydrostatic Test Chart.

4. Facsimile of the stamping appearing on the vessel.

5. Test Plate Report.

6. Stress Relief Graphs.

7. Field Dimension Sketch showing the as-built dimensions.

8. Report on Vacuum Test.

[redacted]

HEAT EXCHANGER DATA

Power level (kw)	200	400	600	800	1000	1500	2000
Temp. of solution in (tubes) ^{o}F	482	482	482	482	482	482	482
Temp. of solution out (tubes) ^{o}F	467	452	436	422	407	370	334
Area of heat transfer (outside) ft^2	75.5	75.5	75.5	75.5	75.5	75.5	75.5
Velocity of fluid through tubes	15.8	15.8	15.8	15.8	15.8	15.8	15.8
U, (Btu/hr ft^2 ^{o}F)(overall)	579	730	821	880	921	985	1020
Temp. of steam leaving boiler (^{o}F)	458	439	421	404	386	343	300
Press. of steam in boiler (psia)	458	378	312	259	210	122.3	67.0
Latent heat of vaporization, L, Btu/lb.	765.4	786.4	805.4	822.1	839.2	876.7	910.1
Water converted to steam (assuming water is heated from 100°F), lbs/hr.	602	1203	1808	2410	3025	4550	6145
Flow of water to shell, ft^3/hr.	11.6	23.0	34.0	44.8	55.6	81.5	106.9
Flow of steam from shell, ft^3/hr.	611	1478	2680	4300	6610	16.610	39800

LOCATION:

The heat exchanger is located in the heat exchanger cell, its center line being approximately 7' 4" above the 830' floor elevation.

ACCESSIBILITY

One day after shutdown

Item	Position	Dose Rate (mr/hr)
Heat Exchanger Tubes	At 50 ft. unshielded	12.6
	At 1 ft. from tank; no water	698
	At 1 ft. from tank; with water	65.2
Heat Exchanger	At 1 ft.	14.1
Heat Exchanger and Tubes	At 1 ft.	79.6

REFERENCE DRAWINGS:

The heat exchanger was fabricated by the A. O. Smith Corporation of Milwaukee, Wisconsin per their following drawings.

Steam Generator	MV-7314 (1 of 3 sheets) - ORNL-E-9584
Steam Generator	MV-7314 (2 of 3 sheets) - ORNL-E-9585
Steam Generator	MV-7314 (3 of 3 sheets) - ORNL-E-9586

[redacted]

Alternate Tube Bundle

PURPOSE:

An alternate tube bundle has been designed for the heat exchanger. The alternate design has the following major advantages over the last design.

1. The tube ends are flared into the tube sheet before welding to prevent weld metal from partially obstructing the tube openings.

2. The inlet and outlet pipes have a gradual transition from 1-1/2 inch, schedule 80 to 2-1/2 inch, schedule 80 pipe for better fluid distribution and low pressure drop.

3. Greater tube-bundle area is specified for higher capacity.

4. Stay bolts are inserted in the head liner to prevent distortion during welding and machining.

GENERAL DATA

a. Tubes - Number of U-Tubes - 109

Size: 1/4" O.D. - 18 BWG (0.049" Wall)

Total heat transfer area based on OD of tube - 67.5 ft^2

b. Tube Sheet - Double tube sheet construction. Tubes rolled in inner tube sheet and heliarc welded to outer tube sheet.

Space between tube sheet to serve as leak detection device.

c. Flanged Connections

Soup Inlet and Outlet - 1-1/2" - 2500# ASA
Welding neck ring joint flanges bored to 1.500" I.D.
Flanged connection on shell side - 10" 600# ASA long welding neck ring joint flange.

d. Design Pressure

Tube Side - 2000 psi
Shell Side - 600 psi

[redacted]

e. Design Temperatures

Tube Side - 650°F
Shell Side - 650°F

f. Test Pressure

Tube Side - 4000 psi
Shell Side - 1200 psi

MATERIAL:

All material in contact with soup is fabricated of type 347 stainless steel. A detailed list of construction materials is given on dwg. D-10130.

REFERENCE DRAWINGS:

Alternate Tube Bundle	D-10130
Tube Sheet, Item 9, SH. 1	D-10131
Tube Bundle, Details, SH.2	D-10132
Tube Bundle, Details, SH.3	D-10133

2.1.5 Soup Return Feed Pump (Item 6 on E-8623)

PURPOSE:

To provide one gallon per minute of filtered soup flow from the dump tanks to the reactor core.

DESCRIPTION:

The pump is a positive displacement, hydraulically actuated diaphragm, type capable of delivering 1 gpm at 1000 psi. Packing glands and stuffing boxes are eliminated by using a hydraulically balanced diaphragm. The pumping system consists of three separate units: the primary drive unit, an intermediate water head, and the remote reagent head.

The intermediate isolating head is incorporated in the system to allow distilled water to be used as the hydraulic fluid in regions where radioactivity is present. The reciprocating primary pump and flow metering system operate in oil and drive the water pumping head. Because of the solid column of oil between the piston and diaphragm, displacement of the piston causes corresponding volume displacement of the diaphragm. The resulting pulsating column of water is piped through the shielding to the remote reagent head which is below the level of the dump tanks.

The remote head is an all welded assembly having check valves welded to the inlet and outlet reagent side. The heads consist of a metal diaphragm oscillating between two machined faces which limit its travel, thereby keeping the diaphragm within its endurance limit. The reciprocation of the diaphragm does the actual pumping, causing the soup to enter the suction valve when the diaphragm is drawn back and forces it out the discharge valve when the diaphragm is moved forward. The cavity for the diaphragm is machined into the reagent and pump head plates and the diaphragm is seal welded at its periphery.

MATERIAL:

Carbon steel was used for the intermediate (oil - water) head body, and the diaphragm is fabricated from stainless steel sheet (Type 347).

Stainless steel (Type 347) was used throughout in fabricating the remote (water - soup) head.

The soup head originally had double ball check valves made of 440 type stainless steel; however the corrosion problem required replacing the stainless steel with Stellite #6.

The primary drive unit is made of commercial parts as described below.

BASIS OF DESIGN:

The pump selected is manufactured by the Lapp Insulator Co., Inc., of Leroy, N.Y., and is identified as their Pulsafeeder Model 5-200 Assembly W-41343. The primary drive originally was a 5 HP 1750 RPM 220V, 3 phase, 60 cycle totally enclosed, fan-cooled motor (No. 254 frame). This drive was changed to a 5 HP 1155 RPM motor, since the check valves did not function properly at the 1750 RPM speed. The motor drives a 20" diameter 3" flat face pulley by means of three "B" section V-belts.

A Goulds Pumps Inc. power unit #1813, having a 5" stroke, is driven by the pulley. The power unit in turn drives a 1-9/16" bore Vickers Model K-JE2W hydraulic cylinder. Originally the hydraulic cylinder had a 1" bore, however, this unit was replaced with a 1-9/16" bore to increase the pump capacity from 0.78 to 1.6 gpm. This was done to compensate for the losses due to compressibility of the fluid in the system pipe lines.

A hydraulic oil reservoir; pressure relief valve (Vicker's No. CT-06-C-10) set at 1200-1300 psi; check valve (Vicker's No. C2-815); and vacuum compensator valve set for 10" Hg. are all incorporated in this unit. All the above components, including the motor drive are mounted on a common channel iron base.

The reagent head is 14-1/2" in diameter and 7" thick. The metal diaphragm is 13" OD., 0.018" thick, and is made of 347 stainless steel. The cavity for the diaphragm is machined into the reagent and pump head plates. The cavity profile was determined by a controlled hydraulic test which pressed a mounted diaphragm against a plaster mold. The resulting impression was measured and used for machining the cavities.

The cavity (11" in diameter) profile consists of a 1/8" flat section starting at the periphery; the center concave portion is .125" deep, and is generated by a 83.358" radius. This radius is blended with a 32.268" convex radius which begins at the end of the 1/8" flat and blends with the concave radius at a distance of 1-5/8" from the O.D. of the 1/8" flat section.

The heads were revised to minimize cracks and crevices and a leak detection fitting was incorporated in the design.

GENERAL DATA

Head:	Design pressure - 2000 psi Test pressure - 3000 psi All welds made by inert gas shielded arc process. Volume of head soup side only (includes check valves) - 510 c.c.
Motor:	Reliance induction Type AA (continuous duty) 220/440 volts, 13.7 amps. at 220V 6.85 amps. at 440V 1155 RPM; 3 phase; 60 cycle.
System Pumping Capacity	1.15 gal/min.
Power Unit	60 strokes/min.
Cylinder-piston displacement	7.35 cc. of oil
Oil	SAE # 30

[redacted]

LOCATION:

The primary drive unit is located at floor level (830') in the service room which is just south of the reactor proper as shown on drawing D-9060.

The intermediate head is located in the outer soup pit which is located just east of the reactor structure. This pit is 5'-9" deep (below 830' el.) and has a 3 ft thick shielding plug in the event the reagent head ruptures and soup reaches the intermediate head.

The reagent head is in the inside soup pit which is located at the bottom of the soup cell. The bottom of the pit is 4'-9" below the floor of the soup cell (El. 826 ft).

REFERENCES:

Lapp Bulletin No. 309 - Entitled - Installation and Operating Instructions - Lapp Pulsafeeder Model 220.

Lapp Insulator Company, Inc. Dwgs.

No. 3719 - Type 5-200 Pulsafeeder Assem. N-41343

No. 3829 - Remote Welded Head Assembly.

ORNL Dwg. D-8322 - Revised Pulsafeeder Head

The soup pulsafeeder system was installed as per the following drawings:

D-9060 - General piping and equipment layout for building.
D-9589 - Piping details for soup and D_2O pits.
D-9590 - Pulsafeeder piping and equipment - inner soup pit.
D-9591 - Miscellaneous details.
D-9051 - Soup cell plan.
D-9052 - Soup cell piping - sectional elevation.

[redacted]

2.1.6 Circulating Pump Purge System (Item 92 on E-8623)

PURPOSE:

To supply approximately one gallon per hour (63 cc/min) of distilled water from the soup gas condenser (Item 14) to the armature housing of the soup circulating pump (Item 4).

DESCRIPTION:

The pumping system consists of two separate units, the primary drive unit with diaphragm head attached, and the remote diaphragm head which is located within the shielding. A water leg with reservoir connected, is used to separate the two diaphragm heads.

The primary drive unit is a Pulsafeeder type pump with motor and diaphragm head all mounted on a common base plate outside the shield. A remote diaphragm head with its check valves is located within the shield. A second set of check valves follow the discharge checks of the remote head, and a vent line and valve (air operated) are located between the two sets of checks to permit purging of the head checks in the event they become gas bound. The primary drive operates a hydraulic piston, which displaces the solid column of oil between the piston and the first diaphragm. Displacement of the first diaphragm causes a corresponding displacement of the water leg and second remote diaphragm. The reciprocation of the remote diaphragm does the actual condensate pumping.

Condensate from the soup gas condenser flows through a filter and then to the reagent pump head. This condensate is then pumped to the armature compartment of the soup circulating pump and finally it passes into the soup stream.

MATERIAL:

The primary pump unit and drive are commercial products and no material substitutions were necessary. Stainless steel diaphragms are used in the heads because of the high working pressure. Stainless steel lines were used from the condensate tank to the reagent head and from the head to the circulating pump. Stellite No. 6 was used in place of 440 type stainless steel for the cone shaped check

[redacted]

valves and seats on the reagent head. The head itself is made of 347 type stainless steel.

The filter in the reagent line is made of stainless steel (type 347) and the distilled water reservoir, which has a capacity of one gallon, is made of carbon steel. This reservoir is used to supply distilled water to the leg between the pump heads.

BASIS OF DESIGN:

Water is supplied at sufficiently high pressure to keep the rotor housing of the pump purged of soup, and thereby prevent any abrasive materials, which may be in the soup, from coming in contact with the bearings or armature. A second feature of this system is the prevention of gas accumulation in the armature compartment. It has been estimated that hydrogen and oxygen, generated from the decomposition of water in a high neutron and gamma flux, will be produced at a rate of 60.9 cc/hr at standard conditions. If gas accumulates in the armature compartment, the motor bearings will run dry and thereby fail. A water flow of approximately 60 cc/hr is adequate to remove the gas by solution.

The pump is a Lapp Pulsafeeder Model CPS-1-modified to deliver approximately one gallon per hour at pressures of 1000 to 1300 psi. The pump motor drives through a coupling to a totally enclosed worm type gear speed reducer, which in turn drives a hydraulic piston. An adjustable arm permits variation of the pump stroke and thereby the pump capacity. Oil is used as the hydraulic fluid between the driven piston and the first diaphragm head. The oil reservoir has a pressure relief valve set at 1200-1300 psi, and a vacuum relief set at 10" Hg.

Slippage, compression of the oil, compression of the water in the water leg, and the expansion of the water pipeline, all result in the pump diaphragms not moving through their full strokes, and thereby a reduction in pumping efficiency. Because of the above factors the 3/8" diameter pump piston (at maximum stroke) did not deliver one gallon per hour at the design pressure, and therefore a 1/2" diameter piston was substituted and the pump bore was reworked accordingly.

[redacted]

Using 1/4" schedule 40 pipe for the water leg we have the following theoretical condition:

Volume of 123" long water line	12.8 in^3
Liquid vol. of head (both sides of diaphragm to check valves)	0.22 in^3
Total water volume	13.02 in^3
Displacement per stroke with no water leg 1 gph at 60 strokes/min	.0642 in^3
Displacement per stroke considering effect of compressibility of water	0.0268
Net output reduced to	0.417 gph
Displacement per stroke considering effect of compressibility of water plus effect of pipe expansion	0.0247
Net output reduced to	0.384 gph

A Micro Metallic Corporation porous type 347 stainless steel filter element is canned in a stainless housing to form the reagent filter. (See Section 2.4.10)

Motor drive for pulsafeeder:

Type	Gen. Elec. A.C. - Model 5KC47AB-899J
H. P.	1/3 - (3 phase, 60 cycle)
RPM	1725
Voltage	115/230
Amperage	4.8 at 115 volts 2.4 at 230 volts

The temperature of the condensate being pumped is assumed to be 150°F. A head of at least 5 psi over the vapor pressure of the fluid being pumped is recommended by the manufacturer. At 150°F, the vapor pressure of water is 3.72 psia. From the bottom of the soup gas condenser to the centerline of the remote head is 4' -1 1/2", corresponding to an absolute pressure of 16.41 psi. Therefore, there is available a pressure differential of 12.69 psi over the vapor pressure of the water at 150°F, at the remote head.

[redacted]

The difference in elevation between the bottom of the soup gas condenser and the centerline of the oil-water head (secondary head) is 3'-1", corresponding to an absolute pressure of 15.98 psi, which gives an available net pressure differential on this head of 12.26 psi.

It is not anticipated that there will be sufficient radiation damage to cause appreciable quantities of water to decompose in the water leg since;

1. Most of the water leg piping is in the shielding or on the external face of the shield; therefore, the area of pipe presented to radiation is small.

2. The radiation level in the heat exchanger cell at the position of the primary head is not exorbitantly high.

3. It has been observed that purified water decomposed only slightly under radiation, and it is assumed that only water which has been distilled, demineralized and degassed will be used to fill the water leg.

LOCATION

The oil pumping unit with its head attached is mounted on the west face of the shield at an elevation of 4 ft above the floor level (830 ft). The reagent diaphragm head is located inside the heat exchanger cell on a bracket adjacent to the soup circulating pump.

Approximate equipment elevations above floor level (830 ft)

Bottom of soup gas condenser (Item 14)	7'-9"
Centerline of soup circulating pump (Item 4)	6'-7 3/4"
Centerline of remote reagent head	3'-7 1/2"
Centerline of oil-water head	4'-8"
Bottom of fill reservoir	8'-4"

REFERENCES

A bulletin (#257) by Lapp describes the installation, operation, and maintenance of their model CPS pumps.

The system is installed per ORNL drawing D-8645 - Piping Details - 1 GPH Pulsafeeder pump.

[redacted]

2.1.7 Oxygen Metering System and Surge Tank (Item 98)

PURPOSE

In order to prevent reduction of uranyl ion within the reactor fuel, oxygen is added to the high pressure circulating soup system when the reactor is operated at such a low power level that the quantity generated by water dissociation is inadequate.

DESCRIPTION

This system is designed to admit oxygen to the vapor space of a surge tank (item 98) inserted in the high pressure return soup line from the dump tanks at a position just before the existing letdown heat exchanger.

Oxygen, which is initially supplied from a manifold located externally to the biological shielding, is metered through a calibrated capillary tube inserted between two isolation valves, (712A and 712B), which are interlocked in such a manner that it is impossible to open both simultaneously. This interlocking of the valves is necessary for safety in order that no direct path is established for the escape of radioactive solution from the shielding. Also, between the two valves is an accumulator tank (item 95) of approximately 0.670 cubic feet which is operable between pressure limits slightly above the soup pressure. A Mercoid pressure controller with the necessary instrumentation determines which of the two valves is open at a particular time.

LOCATION

The oxygen metering equipment is located in the D_2O cell.

MATERIAL

All the pipe lines and equipment coming in contact with soup or the oxygen have been fabricated of type 347 stainless steel.

EQUIPMENT

a. Surge Tank (Item 98)

PURPOSE. The surge tank is designed to dampen pressure oscillations from the soup pulsafeeder pump, and to present adequate surface area for the absorption of the required oxygen into the system.

DESCRIPTION. The body of this vessel is a 2" diameter schedule 80 stainless steel pipe 21 inches long which is capped at both ends. Oxygen is admitted at the top through a 1/8 inch schedule 80 pipe which is concentric with the vessel shell and extends into the shell a distance of 13-3/4 inches.

The soup inlet is a 1/4 inch schedule 80 pipe located 1-1/2 inches above a deflector plate which is welded to the end of the oxygen inlet. The purpose of the deflector plate is to provide a wetted-wall column to insure adequate absorption of 100 ppm of oxygen. The soup outlet is a 1/4" schedule 80 pipe located at the bottom of the vessel.

All vessel welds were full penetration, and made by the heli-arc process. A design pressure of 2000 psi was used, and the hydrostatic test pressure was 3000 psi.

LOCATION. The surge tank is located at the bottom of the soup cell between the check valve in the soup pulsafeeder line and the letdown heat exchanger (Item 12).

BASIS OF DESIGN. To provide necessary surface for absorption of 10-100 ppm of oxygen, and to provide a surge chamber.

Liquid Flow: 1.5 gal/min = 42.96 lb-moles/hr

Gas Flow: At 10 ppm = 2.416×10^{-4} moles/hr

At 100 ppm = 2.416×10^{-3} moles/hr

Surface areas required for absorption:

At 10 ppm = 2.261 in^2

At 100 ppm = 23.76 in^2

Volume of gas section determined by considering the compression and expansion of the gas due to liquid level change to be adiabatic.

Gas Volume Reqd: = 36.37 in^3

REFERENCE DWGS. Fabricated and installed by ORNL Shops per drawings:

Surge tank for Line #110 ---------- D-10119

Reactor Cell Equip. and Piping ---------- D-9595

Soup Cell Piping Plan and Horiz. Sections ---------- D-9051

b. Accumulator Tank (Item 95)

PURPOSE. To act as an intermediate storage tank so that the main oxygen cylinder can be replaced during operation. This tank is kept fully charged at all times by a pressure switch and valve.

DESCRIPTION. Fifteen feet of 3" schedule 80 pipe, and two 3/4 inch thick flat heads were used to fabricate the shell. A 1/8" schedule 80 pipe connection located near the top of the tank goes to the Mercoid controller, and a top 1/8" schedule 40 pipe connection ties into the capillary tube line. This last pipe connection extends from the top to within 1/2 inch of the bottom of the tank to facilitate decontamination if the need arises.

MATERIAL. Type 347 stainless steel was used for the entire tank and pipe connections.

LOCATION. The accumulator tank is located in the north east corner of the soup cell.

BASIS OF DESIGN.

Volume of tank based on 15' length of pipe which is limited by space requirements.	0.670 ft^3
Design Pressure	2000 psi
Working Pressure	1200 psi at room temp.
Test Pressure	3000 psi

REFERENCE DRAWINGS. Fabricated by ORNL Shops and installed per Drawings:

Accumulator tank and details	D-10121
Soup cell piping plan and horiz. sections	D-9051
Soup cell piping sectional elevations	D-9052

c. Capillary Tubing Section

PURPOSE. To provide the pressure drop necessary to meter the proper amount of oxygen to the surge tank.

DESCRIPTION. Six feet of .025 O.D. (.002" wall thickness) capillary tubing was coiled into a 1" schedule 80 pipe

approximately 8" long. A 1 x 1/2" schedule 80 concentric reducer is welded to one end, and a special adapter piece is welded to the other end after the tubing is silver soldered to the adapter. Two 1/4" schedule 80 connections are welded to the section, and the pressure drop across the tubing is measured by connecting these lines to a differential pressure cell.

MATERIAL. Type 347 stainless steel was used for the body of this section. The capillary tubing was also made of stainless steel.

LOCATION. This section is located at the top of the north west corner of the D_2O compartment.

BASIS OF DESIGN. To provide the pressure drop necessary to introduce 30 cc/min of oxygen at 1200 psi operating pressure.

Design pressure	2000 psi
Operating pressure	1200 psi
Test pressure	3000 psi

Capillary tubing was calibrated in the field.

REFERENCE DRAWINGS. Fabricated by ORNL Shops and installed as per drawings:

Accumulator tank and details	D-10121
Reflector Cell Piping - Plan & Elevation	D-8628
Oxygen Metering Station	D-10120

2.1.8 Pressurizer (Item 2 on E-8623)

PURPOSE.

The pressurizer acts as an elastic surge tank, and as a means of raising the system pressure from the vapor pressure of the soup at operating temperature (560 psi) to 1000 psi.

DESCRIPTION

The pressurizer consists of a cylindrical vessel which is welded to the reactor core neck assembly at a point 13-1/2 inches above the top flange closure. Overall height of the pressurizer above the top flange of the reflector vessel is 66-1/4 inches. The neck of the pressurizer consists of approximately 20 inches of 3" schedule 160 pipe, and the head is made of 30 inches of 6" schedule 120 pipe. A steam space is provided by jacketing the neck section with 15 inches of 6" schedule 120 pipe.

Soup in the pressurizer is automatically maintained at a constant level approximately three inches above the neck section by means of a liquid level indicator and controller. A ten kilowatt boiler operating at 1500 psi and 596°F, supplies steam for the pressurizer jacket. A water cooled by-pass line from the liquid-level indicator to the bottom drain connection of the pressurizer was incorporated in order to induce circulation of the fluid.

MATERIAL

Stainless steel, type 347, was used throughout the vessel, and full penetration, inert-gas arc welding was specified.

LOCATION

The pressurizer is welded to the top flange of the reflector vessel, and its top is approximately twelve feet above the 830' floor elevation.

BASIS OF DESIGN.

Physical limitations of the vessel prevented strict adherence to the ASME Unfired Pressure Vessel Code - 1950. The vessel was radiographed as per par. UW-11 of the 1950 code.

Pressures and Temperatures.

Inner Vessel:	Design Press:	2000 psi at 600°F
	Working Press:	1000 psi at 482°F
Steam Jacket:	Design Press:	1500 psi at 60°F
	Working Press:	1500 psi at 596°F

Soup Steam Space = 0.364 ft^3 (normal soup level will be approximately 3-1/2 inches above the bottom connection to the liquid level indicator.)

Steam Jacket Heat Transfer Area = approximately 1.0 ft^3

Connections

Description	Pipe No.	Size	Schedule
To Reflector Vessel		3"	80
Steam Jacket - Inlet	426	1"	80
Outlet	427	3/4"	80
Level Controller	702	1/4"	80
	704		
Top Bleed	125	1/4"	80
Soup Feed	111	1/4"	80

Induced Activity

Induced activity of the control rod housing, pressurizer, piping etc. on the top flange is as follows:

Time	Curies
Saturation	242
One Day	84
One Week	71
One Month	39

REFERENCE DRAWINGS

Fabricated and installed by ORNL Shops as per Drawings:

Pressurizer	Item 2	D-10103
Pressurizer	Details	D-10104
Reactor Cell Equip. and Piping		D-9595
Reflector Vessel Flange Piping		E-8627

2.1.9 Letdown Heat Exchanger (Item 12 on E-8623)

PURPOSE

To cool the two-phase soup stream being dumped so that the throttling valve will not be continuously exposed to very hot solutions, and at the same time heat the soup being injected into the reactor, thereby minimizing heat losses.

DESCRIPTION

The exchanger consists of fifty feet of 1/4" IPS schedule 40 pipe inside 1/2" IPS schedule 40 pipe in the form of a coil having an inside diameter of 18 inches. Soup, fed by the feed pump (Item 6), passes through the 1/4" pipe and flows to the inlet connection of the pressurizer. The gas-liquid stream (two-phase flow) passes from the central line of the core neck through the annulus of the heat exchanger (counterflow to the soup being returned from the dump tank to the core), and then through an expansion valve (letdown valve) where the pressure is reduced to about atmospheric before entering the dump tanks.

MATERIAL

Stainless steel, Type 347, is used throughout in fabricating the exchanger.

BASIS OF DESIGN

Experimental Data:

Inlet temp. of soup from pump	135°F
Outlet temp. of soup from pump	419°F
Inlet temp. of stream from core	446°F
Outlet temp. of stream from core	183°F

Pressure drop through the annulus varies with the amount of gas flowing. Under steady state conditions (no oscillations) and a 1000 psig inlet pressure, the pressure drop varies from 100 psig to 340 psig with an average of 180 psig.

If the flow of the soup feed pump does not fall below 1.0 gpm, the letdown system will be stable at all gas flows and temperature conditions expected to be encountered in the reactor. Normal reactor conditions are considered to be an average operating temperature of 250°C (482°F) in the core, and a gas flow rate of 200 cc/sec at 1000 psi. This is based on 50 ev per molecule at 1000 kw power level.

Tests in the letdown system on tubes of various lengths and diameters showed the annular passage to be far more stable than a tube of equivalent cross section. A small hydraulic radius, as obtained in the annular space of the exchanger (.021 in.), is desirable if oscillations are to be avoided at the rated gas rates. Smith and Katz found that the principal source of oscillations in the letdown system is the pressurizer; however, the problem of avoiding oscillations is one of providing an arrangement of equipment (system geometry) and conditions for the steady state movement of the two-phase stream from the core to the dump tanks.

Working pressure of exchanger	1000 psi
Design pressure of exchanger	2000 psi
Test pressure of exchanger	3000 psi

LOCATION

As shown on the soup cell drawings, the exchanger is located at the north end of the soup cell at floor elevation (830 ft).

REFERENCES

The exchanger was fabricated and installed per the following drawings:

D-9062	Letdown Heat Exchanger - Item 12
D-9051	Soup Cell Piping - Plan and Horiz Sections
D-9052	Soup Cell Piping - Sectional Elevation

[redacted]

2.2 The Low Pressure Soup System

2.2.1 General Description of System Design

A flowsheet of the low pressure soup system is shown in Figure 2.2.1A. This complete system has essentially five functions.

1. Provides dumping facilities.
2. Permits dilution control.
3. Recombines $2H_2 + O_2$ in the effluent gas stream.
4. Eliminates active gases by exhausting to atmosphere.
5. Provides storage space for soup during decontamination (outer dump tanks).

In this report the high and low pressure soup systems are divided by:

1. The letdown valve in line 105 which follows the letdown heat exchanger (Item 12).

In order to remove the gases normally generated within the reactor core, a two-phase stream is bled continuously through line 104 which pases through the letdown heat exchanger, the letdown valve, and goes directly to the liquid-gas separator which is connected to the dump tanks.

In normal operation soup is pumped to the core from the dump tanks, and for a constant pressurizer level this soup must be bled from the core back to the dump tanks. Changes in reactor power will cause corresponding level changes in the pressurizer due to expansion of the liquid and to variations in gas formation. These level changes cause the controller to adjust the throttling of the letdown valve to compensate for them.

2. The control valve in line 125 which serves the pressurizer (Item 2).

The pressurizer can become gas-bound so the vapor pressure does not control the total pressure. A thin vapor controlled region lies just above the solution surface when appreciable gas is present, and a control valve (in line 125) is provided to bleed off this gas which may be oxygen from the oxygenating system or decomposition gases from the soup solution. A thermocouple in the top of the pressurizer senses the temperature, and through instrument TRC-29 used this temperature to bleed off the gas through the control valve in line 125. This gas in turn flows to the soup gas condenser (Item 14) via line 115, and at this point joins the effluent gas stream issuing from the liquid gas separator atop the inner dump tanks.

[redacted]

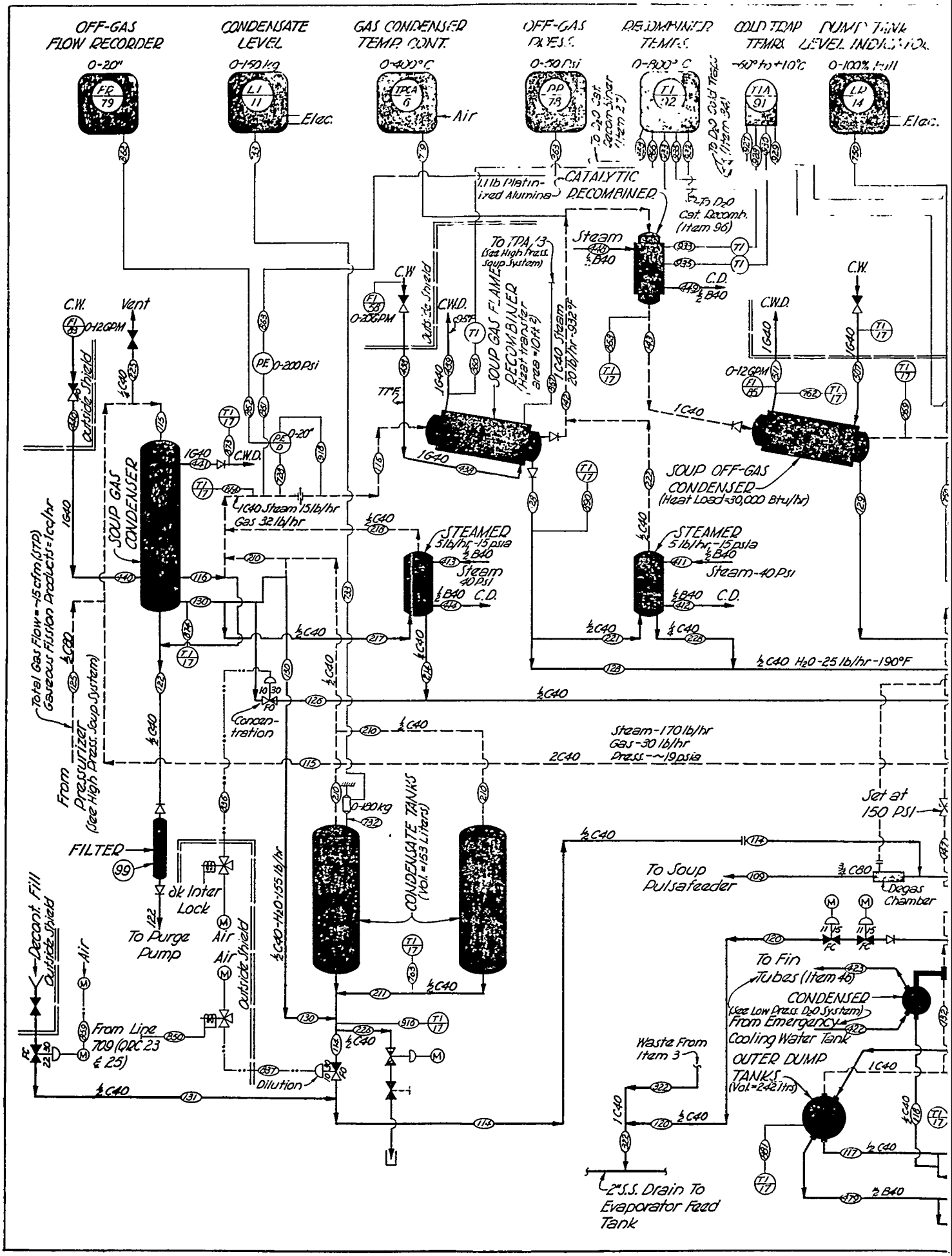

OFF-GAS FLOW RECORDER
0-20"
CONDENSATE LEVEL
0-150 kg
Elec.
GAS CONDENSER TEMP. CONT.
0-400°C
Air
OFF-GAS PRESS.
0-50 Psi
RECOMBINER TEMPS.
0-800° C
COLD TRAP TEMPS.
-60° to +10°C
DUMP TANK LEVEL INDICATOR
0-100% Full
Elec.
1.1 lb Platinized Alumina
CATALYTIC RECOMBINER
To D2O Cat. Recomb. (Item 96)
Steam
To TPA/3 (See High Press. Soup System)
SOUP GAS FLAME RECOMBINER (Heat transfer area = 10 ft²)
1C40 Steam 20 lb/hr - 932°F
C.W.
Vent
0-12 GPM
Outside Shield
0-20 GPM
C.W.D.
0-200 Psi
0-20"
SOUP GAS CONDENSER
1C40 Steam 15 lb/hr
Gas 32 lb/hr
STEAMER 5 lb/hr - 15 psia
Steam 40 Psi
SOUP OFF-GAS CONDENSER (Heat Load = 30,000 Btu/hr)
STEAMER 5 lb/hr - 15 psia
Steam - 40 Psi
½C40 H2O - 25 lb/hr - 190°F
Total Gas Flow = ~15 cfm (STP)
Gaseous Fission Products = 1cc/hr
From Pressurizer (See High Press. Soup System)
Concentration
Steam - 170 lb/hr
Gas - 30 lb/hr
Press. - ~19 psia
2C40
0-180 kg
CONDENSATE TANKS (Vol. = 153 Liters)
½C40 - H2O - 155 lb/hr
FILTER
To Purge Pump
Air
Air
Outside Shield
Decont. Fill
Outside Shield
Air
From Line 709 (QRC 23 & 25)
Dilution
Set at 150 PSI
To Soup Pulsafeeder
Degas Chamber
To Fin Tubes (Item 46)
CONDENSER (See Low Press. D2O System)
From Emergency Cooling Water Tank
Waste From Item 3
OUTER DUMP TANKS (Vol. = 242 ltrs)
2" S.S. Drain To Evaporator Feed Tank

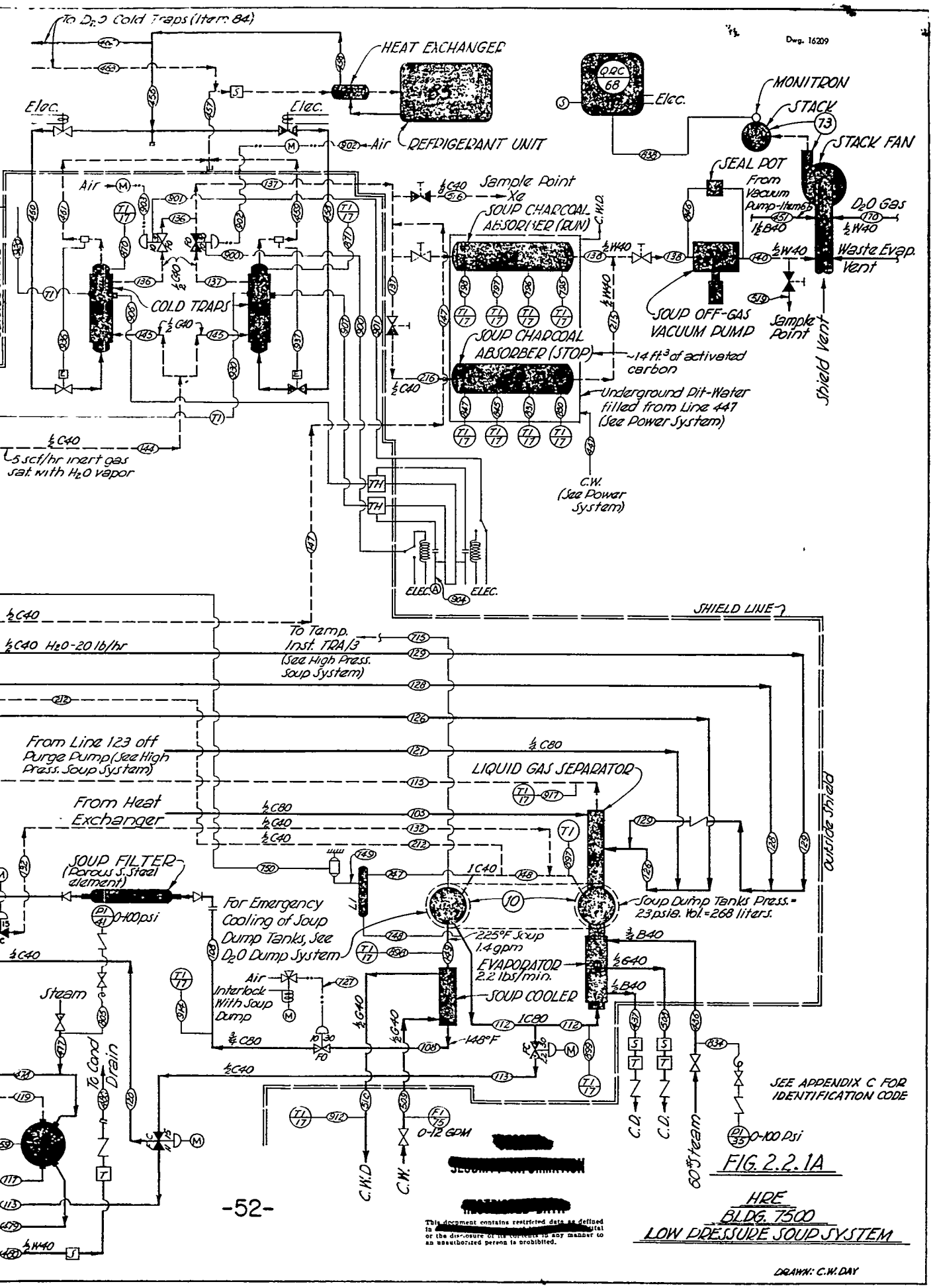
Dwg. 16209
To D2O Cold Traps (Item 84)
HEAT EXCHANGER
REFRIGERANT UNIT
Elec.
Air
MONITRON
STACK
STACK FAN
SEAL POT
From Vacuum Pump-Item 65
D2O Gas
Waste Evap. Vent
Sample Point Xe
SOUP CHARCOAL ABSORBER (RUN)
SOUP CHARCOAL ABSORBER (STOP)
~14 ft.3 of activated carbon
Underground Pit-Water filled from Line 447 (See Power System)
SOUP OFF-GAS VACUUM PUMP
Sample Point
Shield Vent
COLD TRAPS
5 scf/hr inert gas sat. with H2O vapor
C.W. (See Power System)
ELEC.
SHIELD LINE
To Temp. Inst. TRA/3 (See High Press. Soup System)
H2O-20 lb/hr
From Line 123 off Purge Pump (See High Press. Soup System)
From Heat Exchanger
LIQUID GAS SEPARATOR
Outside Shield
SOUP FILTER (Porous S. Steel element)
0-100 psi
For Emergency Cooling of Soup Dump Tanks, See D2O Dump System
Soup Dump Tanks Press.=23 psia. Vol.=268 liters.
225°F Soup 1.4 gpm
EVAPORATOR 2.2 lbs/min.
SOUP COOLER
Air Interlock With Soup Dump
Steam
To Cond. Drain
148°F
0-12 GPM
C.W.D.
C.W.
C.D.
60 psi Steam
0-100 psi
SEE APPENDIX C FOR IDENTIFICATION CODE
[redacted]
This document contains restricted data as defined in [redacted] or the disclosure of its contents in any manner to an unauthorized person is prohibited.
HRE
BLDG. 7500
LOW PRESSURE SOUP SYSTEM
DRAWN: C.W. DAY

FIG. 2.2.1A

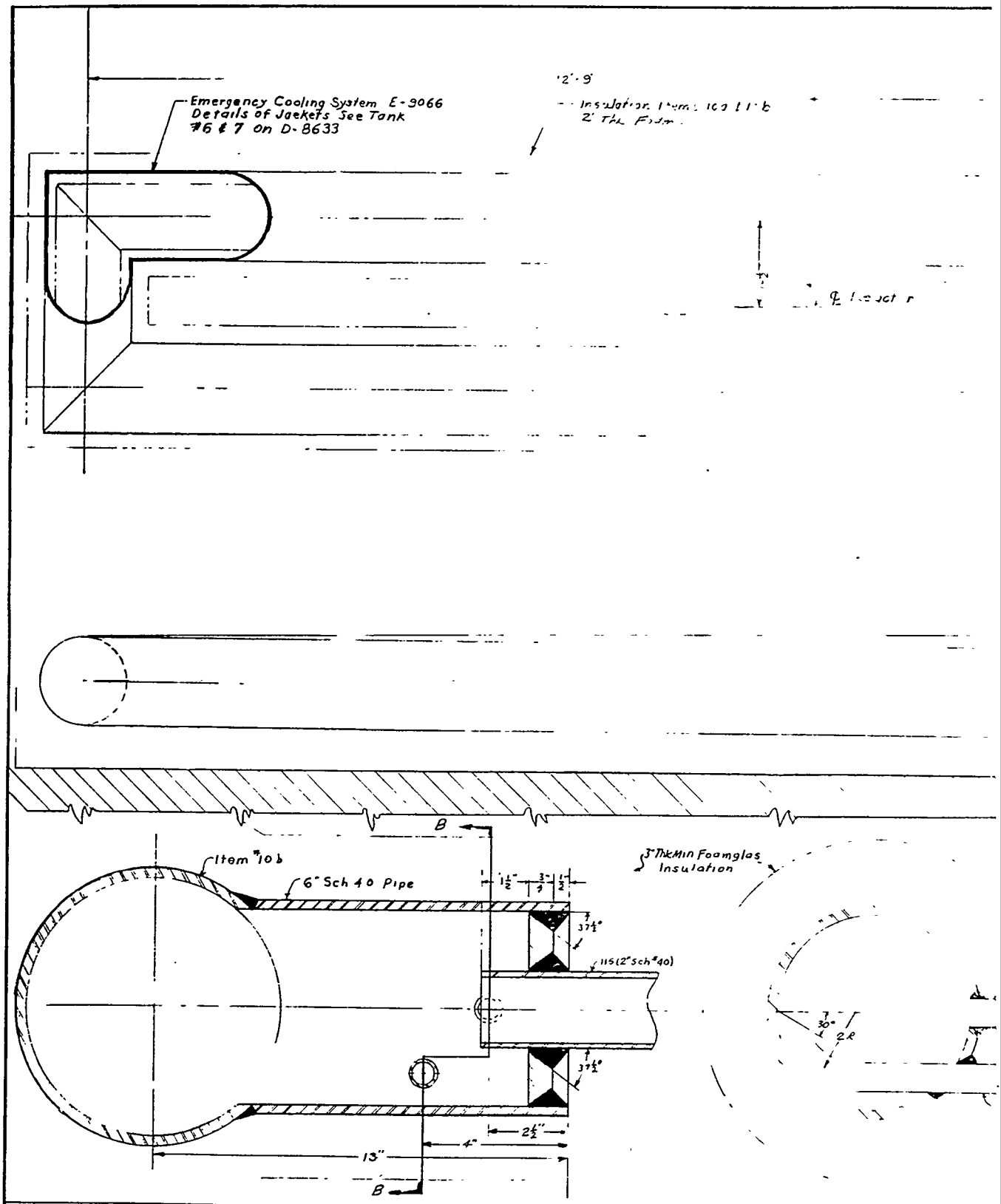

A - A

Detail Of Item #91 - Liquid Separator

Scale ½" = 1"

NO.	REVISIONS	DATE	APPR.	APPR.
	Completely Retraced	8-5-52		

DRAWING NO. D-9592

DRAWN	DATE	CHECKED	DATE	APPROVED	DATE
R.D.S.	8-5-52				
DESIGNED	DATE	SUBMITTED	DATE	APPROVED	DATE

HEALTH PHYSICS	MEDICAL	OPERATIONS	SAFETY
FIRE PROTECTION	RESEARCH SHOP	MAINTENANCE	

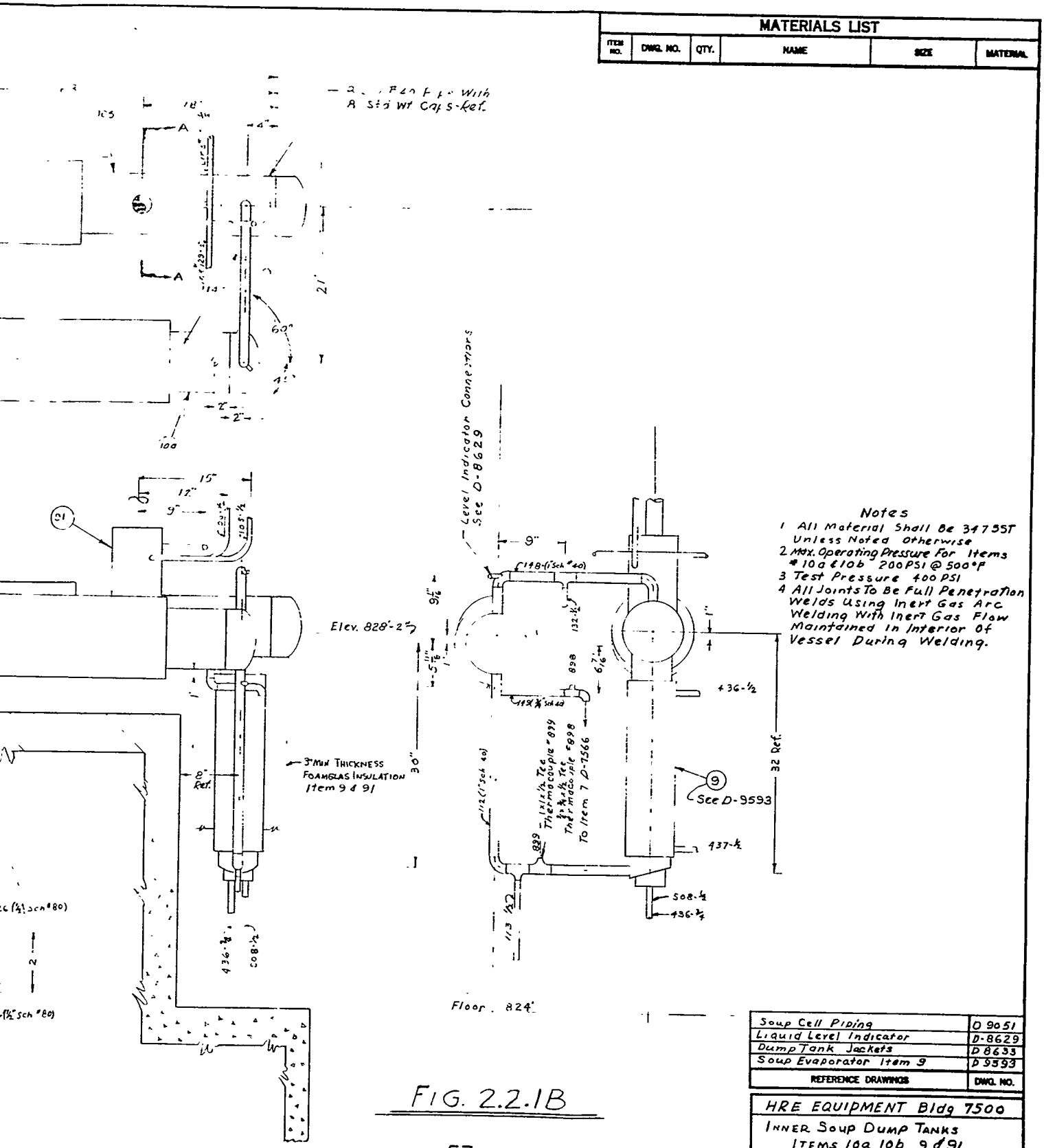

MATERIALS LIST
ITEM NO.
DWG. NO.
QTY.
NAME
SIZE
MATERIAL
Level Indicator Connections See D-8629
Elev. 828'-2"
3" MIN THICKNESS FOAMGLAS INSULATION Item 9 & 91
See D-9593
Floor 824'
32 Ref.
Notes
1 All Material Shall Be 347 SST Unless Noted Otherwise
2 Max. Operating Pressure For Items #10a & 10b 200 PSI @ 500°F
3 Test Pressure 400 PSI
4 All Joints To Be Full Penetration Welds Using Inert Gas Arc Welding With Inert Gas Flow Maintained In Interior Of Vessel During Welding.
Soup Cell Piping D 9051
Liquid Level Indicator D-8629
Dump Tank Jackets D 8633
Soup Evaporator Item 9 D 9593
REFERENCE DRAWINGS
DWG. NO.
HRE EQUIPMENT Bldg 7500
INNER SOUP DUMP TANKS
ITEMS 10a 10b 9 & 91
OAK RIDGE NATIONAL LABORATORY
OPERATED BY
CARBIDE AND CARBON CHEMICALS COMPANY
A DIVISION OF UNION CARBIDE AND CARBON CORPORATION
OAK RIDGE, TENNESSEE
SUBMITTED
ACCEPTED
APPROVED
THIS DRAWING CLASSIFIED
AS OFFICIAL USE ONLY
PER
SCALE 1/8" = 1" & Noted
D-9592

FIG. 2.2.1B

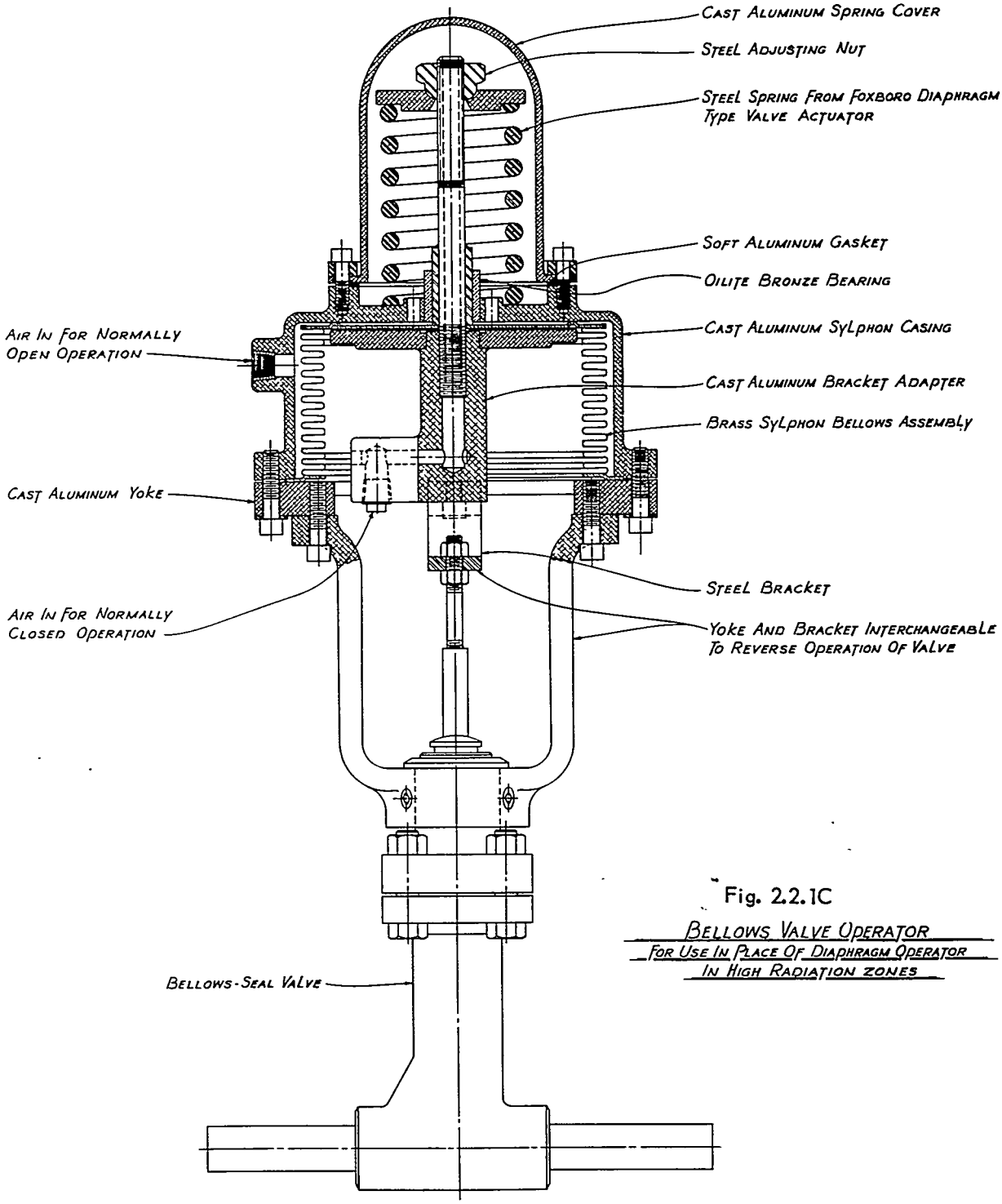

Fig. 2.2.1C

Bellows Valve Operator
For Use In Place Of Diaphragm Operator
In High Radiation Zones

OFFICIAL USE ONLY
D-9075

Soup is charged continuously from the dump tank (see Figure 2.2.1B) into the reactor by the soup feed pump (Item 6). A cooler, filter, and degas chamber are installed in the feed line to prevent fouling and vapor binding in the check valves of the pump. This cooler can also be used as a flow measuring device.

Provision has been made for cooling the inner dump tanks after a dump. A closed water system (emergency cooling water system Figure 2.6.1A), which is circulated and cooled by natural convection, is used for this purpose; thus eliminating the need for a water supply or pumping facilities.

The main components of the off-gas system are the dump tanks, evaporator, liquid gas separator, soup gas condenser, condensate tanks, flame recombiner, catalytic recombiner, steamers, off-gas condenser, cold traps, charcoal adsorbers, and exhaust system.

Gas and/or liquid entering the low pressure soup system will be handled in the following manner: The liquid-gas stream passes from the letdown valve (line 105), or from the dump valve in line 106, to the liquid gas separator. At this point the soup goes to the inner soup dump tanks and the gas joins the steam generated by the evaporator and passes to the soup-gas condenser where most of the heat is removed. Condensate collected in the condenser flows to: 1) the inlet of the purge pump (Item 92), 2) the condensate tanks (Item 1), and 3) to the steamer (Item 93A). The steam vapor from the steamer joins the gas stream leaving the condenser and flows through line 116 which contains an orifice (having a .540 psi differential pressure drop - Dwg. B-10115) to measure gas flow.

Line 116 goes to the water cooled flame recombiner where the $2H_2 + O_2$ in the gas stream is recombined. The resulting condensate flows by gravity to: 1) a steamer (93-B), which provides a diluent for the gas stream entering the catalytic recombiner, and 2) to the inner dump tanks. The gas leaving the flame recombiner then enters the catalytic recombiner which acts as the primary recombiner when operating at low gas flows. A water cooled off-gas condenser follows the catalytic recombiner in which the heat of recombination is dissipated. Condensate collected in the condenser flows by gravity to the inner dump tanks. Two cold traps follow the condenser (one is in use while the other is being defrosted) to freeze out any final traces of moisture before the gas stream enters the charcoal adsorber where the active gases (principally Krypton and Xenon) are preferentially adsorbed before the effluent gas steam (which by this time is essentially O_2) is discharged to the atmosphere via the exhaust stack. A stack gas monitor (QRC 68) is used to detect the escape of active gases to the atmosphere. A vacuum pump, installed between the outlet of the adsorbers and the exhaust stack, can be used to evacuate the system for filling, to increase the flow rate if

desired, to facilitate regeneration of the adsorber bed if the need arises, and can reduce the operating pressure in the dump tanks. A mercury seal pot is installed across the pump to prevent water vapor from entering the bed. Line No. 131 which has a hand and control valve, is connected to line 114 below the condensate tank (Item 11) to provide a means of introducing decontaminant solutions into the soup system, and drain line No. 120 is connected to the waste disposal system.

GENERAL DATA

Quantity of gases flowing in system at 1000 kw power level:

Gas	Flow Rate
Hydrogen	9.86 cfm at STP
Oxygen	4.93 cfm at STP
Total gas flow	14.79 cfm at STP
Gaseous fission products	1 cc/hr

Typical Data for Recombiner System Operating at Standard Conditions - 1000 KW Power Level

(Gas flow rate of 15 cfm at STP with 5 lbs/hr of steam injected into the cool gas leaving the first condenser.)

Theoretical heat of recombination	204,000 Btu/hr
Burner chamber:	
Cooling water flow	20 gpm
Heat in cooling water (experimental)	126,000 Btu/hr
Second condenser (Item 15):	
Cooling water flow	5.2 gpm
Heat in cooling water (experimental)	65,500 Btu/hr
First condenser (Item 14):	
Cooling water flow	16 gpm
Heat in cooling water (experimental)	50,400 Btu/hr
All cooling water inlet temps.(assumed)	60°F
Flow orifice conditions:	
Total pressure	41.2" HG abs
Temperature	123°F
Composition - % gas	91.1%
Burner nozzle (diff. pres.)	4.5" HG

[redacted]

Estimate of Pressure Drops in Lines and Equipment Between Dump Tank and Burner Nozzle

Item	Pressure Drop - psi
Entrance from liquid vapor separator to vapor line	.0079
16 1/2 ft of 2" vapor line (Line 115)	.055
Entrance from vapor line to top of condenser	.0181
Entrance to tubes	.010
Tubes of condenser (36" Long)	.0018
Exit from tubes to bottom head of condenser	.010
Entrance from bottom head of condenser to gas line between condenser and recombiner	.0065
9 1/2 ft of 1" pipe to recombiner (line 116)	.0475
Orifice in Line 116 (assume 60% recovery)	.216
Total losses (except nozzle)	.3728 psi
11 ft barometric water leg	4.7685
Pressure drop available for nozzle	4.3957 psi

Information on Equipment in Low Pressure Soup System:
(Not covered in following sections)

1.	Letdown valve (No. 105)	See control valve schedule Appendix H
2.	Dump valve (No. 106)	See control valve schedule Appendix H
3.	Concentration valve (No. 126)	See control valve schedule Appendix H
4.	Dilution valve (No. 114)	See control valve schedule Appendix H
5.	All other control valves in system	See control valve schedule Appendix H
6.	Degas chamber in Line 109	See drawing D-9591.
7.	Orifice in Line 116	Flow nozzle (.375" dia) - See drawing B-10115.
8.	Seal pot around vacuum pump	See drawing C-9581.
9.	Soup off-gas vacuum pump	This unit is a standard model pump as manufactured by the Kinney Manufacturing Company of Boston, Mass.- Model DVD-8810 driven by a 5 HP motor. Reference: Kinney Bulletin V 45.

Many of the air operated valves in both the soup and reflector systems (within the reactor cells) have been designed with bellows operators (see Figure 2.2.1C) since the normal diaphragm operators would be subject to failure due to radiation damage.

A detailed description of each item (as listed in the Table of Contents (2.2.2 thru 2.2.13) in the low pressure soup system follows:

[redacted]

2.2.2 Inner Soup Dump Tanks (Item 10 on E-8623)

PURPOSE

To provide "ever-safe" storage space for the uranyl sulfate solution in the soup system.

DESCRIPTION

The dump tanks are actually one U-shaped vessel consisting of two 12'-9" long sections of 8" schedule 40 stainless steel pipe on 21" centers which are connected at one end. As shown in Figure 2.2.1B the tanks run east and west parallel to the reflector dump tanks, and are numbered 6 and 7. Tank number 7 is sloped toward the junction of the two, and tank 6 is sloped away from the junction such that any drainage will flow to lines 149, which serves the soup pulsafeeder pump, and 112 which goes to the outer dump tanks. Line 112 also feeds the soup evaporator (Item 9) which is welded to the bottom of the free end of tank number 7.

Soup enters the tank by way of the liquid gas separator (Item 91) which is welded to the top of the free end of tank number 7 as shown on drawing D-9592. A common gas header line (148) is connected across the tanks and serves to vent gases which may accumulate in the soup lines feeding the pulsafeeder pump or in the gas header of the outer dump tanks. During normal operation the dump tank will operate at a pressure of approximately 23 psia.

A water jacket consisting of approximately 24 ft of 11" O.D. x 11 gage (.1196) steel sheet is welded to the tank. Cooling water, which is provided by the emergency cooling system, enters the jackets through two lines (Nos. 420 and 407) located at the bottom of both ends of the jacket, and exits by line 415 which is located at the top of the U bend.

Angle iron saddle supports, which are welded to the water jacket, are used to support the tanks, and spacers are used between the jacket and tanks at the supporting points. The supports are welded to the foundation in such a manner as to allow expansion during operation.

A liquid balance check on concentration can be made by measuring the liquid level in the dump tanks. This is accomplished by weighing the amount of liquid present in a small weigh tank which is adjacent to the dump tanks and connected to them by tubing. The weigh tank is suspended from a Wianco variable inductance transmitter which is in turn connected to a Foxboro Dynalog recording instrument.

[redacted]

MATERIAL

All surfaces in contact with soup are fabricated from Type 347 stainless steel. Cold-rolled carbon steel sheet was used in fabricating the water jacket, and mild steel was used for the saddle supports.

BASIS OF DESIGN

A. Volume Requirements

Net volume in main soup circulating system. Breakdown by items is given in Section 2.1 of this report. Total volume is 73.1 liters.

Minimum inventory in soup-dump system

Item	Vol. in Liters
Evaporator and Dump tanks	7.0
Lines to Evaporator above Drain Valve (Line 113)	.7
Filter (Item 8)	1.0
Cooler (Item 7)	1.0
Pulsafeeder (1 gpm)	.5
Lines to Pulsafeeder	0.8
Letdown Heat Exchanger	1.6
Lines to Letdown Heat Exchanger	.4
Line 114 from Cond. Tanks to Line 109	1.0
Total:	14.0

Volume of condensate tanks (Item 11) - 157 liters
Total soup plus condensate - 244 liters

B. Total Volume of Soup Inner Dump Tanks

Dump Tanks	268 liters
Evaporator	5 liters
Total:	273 liters

C. Maximum Allowable Working Pressure

See Basis of Design, Part C, of Section 2.4.3. Maximum allowable working pressure is 970 psi.

D. Test Pressures

Dump Tanks	1500 psi
Water Jacket	50 psi

[redacted]

[redacted]

LOCATION

As shown on drawing E-9066 the soup dump tanks are the third and fourth tanks from the south end of the dump tank pit, and are arbitrarily numbered 6 and 7. They are centrally located in the reactor shielding at an elevation of 828'-2"-(22 inches below floor level). Each tank is separated from the next by an 8 inch thick concrete wall, and approximately 5 feet of high density concrete shields the dump tanks from the building operating space. The tanks are contained in a pit lined with stainless steel which has one outlet consisting of a 2" pipe leading by gravity to the waste evaporator which is located outside the building proper.

Criticality of Dump Tanks

Calculations show that an 8" diameter pipe, of infinite length, surrounded by an infinite water reflector, and assumed to be filled with water containing pure U-235, requires eight kilograms of U-235 per 12 ft length to become critical. This corresponds to a solution with 66 grams per liter of U-235. It was felt that the tanks were adequate from the safety standpoint since:

1. The actual anticipated loading is 40 grams per liter or 4 kg. of U-235 in 100 liters of solution.

2. Eight kilograms of 235 ~~are required~~, or twice the total amount available.

3. One hundred and twenty-five liters of water are required to fill the pipe, or considerably more than the total volume of the circulating soup system.

4. The thermal absorption of the stainless steel pipe was neglected in the calculation.

A sheet of cadmium (.020" thick) was placed between the two dump tank legs to act as a neutron absorber and therefore as an additional criticality safety factor.

REFERENCES:

The following drawings were used in fabricating and installing the inner soup dump tanks:

D-9592 - Inner Soup Dump Tanks
D-8633 - Dump Tank Details
D-9066 - Emergency Cooling System
D-8629 - Dump Tank Level Indicator Assembly
D-8634 - Dump Tank Level Indicator Details

[redacted]

[redacted]

2.2.2a Liquid Gas Separator (Item 91 on E-8623)

PURPOSE

To act as a receiver and liquid gas separator for the two-phase letdown or dump stream as it passes to the inner soup dump tanks. This separator is also a receiver for the off-gas system condensate and the gas bled from the soup Pulsafeeder line.

DESCRIPTION

As shown on drawing D-9592, a 10 1/2" length of 6" schedule 40 pipe with a flat head is saddle welded to the soup dump tanks to form the separator chamber. This chamber is welded in a vertical position and forms a dome which has its vertical centerline located 22" from the end of the dump tank. The inlet line from the dump system is a 1/2" schedule 80 pipe which is cut off at an angle of 30°, and is bent on a 2" radius after entering the chamber. A 2" schedule 40 pipe (line 115) is used as the top gas outlet, and approximately 1 1/2" of this 2" line projects into the separator chamber. Condensate from the off-gas system enters the chamber by way of a 1/2" schedule 80 pipe inlet (line 126) which is located approximately 2 1/2" from the top of the separator.

MATERIAL

Type 347 stainless steel was used in fabricating the entire separator.

BASIS OF DESIGN

Six inch pipe was used to minimize the gas velocity in the chamber, and the curved inlet from the dump system minimizes entrainment by the centrifugal separating action it imparts to the fluid. The 2" outlet has a re-entrant connection which forms a hollow cylindrical space within the separator. Swirling liquid will rise in the chamber, and this space is provided to prevent the liquid from going directly out the gas outlet. A 1/2" pipe was used between the letdown valve and the separator to minimize the pressure drop; and a 2" gas outlet was chosen on the basis that it minimized the pressure drop from the dump tanks to the soup gas condenser (Item 14), since the off-gas system driving force depends only on the pressure produced by the barometric water leg from the flame recombiner to the dump tanks.

LOCATION

As mentioned above the separator is welded to the top of the east end of tank No. 7 which extends to a point just outside the soup cell as shown on drawing D-9052.

[redacted]

REFERENCES:

The separator was fabricated and welded to the dump tanks as shown on the following drawings:

D-9592 - Inner Soup Dump Tanks - Items 10, 9, and 91.
D-9051 - Soup Cell Piping.

2.2.2b Soup Evaporator (Item 9 on E-8623)

PURPOSE

To provide a continuous source of one kilogram of steam per minute for purposes of concentration control, and to prevent flashback from the flame recombiner (Item 13).

DESCRIPTION

As shown on drawing D-9593 the evaporator consists of a 6" O.D. x 1/4" wall tube 29-5/8" long which is saddle welded to the bottom of #7 dump tank. This tube is double jacketed, and the soup is evaporated in an annulus formed by the O. D. of a 4" pipe and the I.D. of the 6" tube. The steam jackets are concentric with respect to the 6" tube; the inside jacket consisting of a 25-1/2" length of 4" schedule 40 pipe with a capped top and a welded flat head bottom; and the outside jacket consisting of 23-7/8" of 6-5/8" O.D. x 1/8" wall tubing. The 4" pipe section has a 3/4" schedule 40 pipe inlet which extends to within 1-1/2" of the pipe cap, and a 1/2" schedule 40 outlet pipe; both are welded to the bottom flat head. Inlet and outlet connections to the outer steam jacket are made of 1/2" schedule 40 pipe. An inlet (line 112) consisting of 1" schedule 40 pipe is welded to the bottom of the evaporator section, and the bottom of the evaporator is sloped toward the inlet to minimize holdup and to facilitate decontamination.

The vertical centerline of the evaporator is 8" from the end of dump tank number seven.

MATERIAL

Type 347 stainless steel is used throughout in fabricating the evaporator.

BASIS OF DESIGN

1.	Liquid Soup Temperature	212°F
2.	Required Vapor	1 kilogram (2.2 lbs)
3.	Steam Pressure	60 psig (75 psia)
4.	Steam Temperature	307.6°F

[redacted]

5.	Overall Heat Transfer Coefficient	280 Btu/hr-ft^2-$^\circ$F
6.	hfg (steam at 212°F)	970.3 Btu/lb.
7.	Calculated Heat Transfer Area Reqd.	4.78 ft^2
8.	Actual Area of Evaporator	5.25 ft^2
9.	Safety Factor	1.1

Both steam jackets were located such that the liquid surface will be at least 1" above the heating surfaces, thereby avoiding any high temperature gradients. Shell size was chosen on the basis of heat transfer considerations, and to limit the depth of the evaporator. Since the system depends on natural convection circulation, a balance between holdup and production was provided by minimizing the pressure drop through the evaporator. Experimental tests indicated that a 1/2" inlet had too high a pressure drop; a 1" inlet was finally chosen as the proper size.

LOCATION

Item 9, the soup evaporator, is welded to the east end of inner dump tank number 7 which in turn extends into the soup cell as shown on drawing D-9052.

REFERENCES:

The following drawings were used in fabricating and installing the soup evaporator.

D-9593 - Soup Evaporator - Item 9
D-9592 - Inner Soup Dump Tanks
D-9051 - Soup Cell Piping - Plan and Horiz. Section
D-9052 - Soup Cell Piping - Sectional Elevations

2.2.3 Soup Filter (Item 8 on E-8623)

This filter consists of a Micro-Metallic Corporation porous stainless steel filter element which is canned in a 3-1/2" schedule 80 stainless steel pipe. It is identical in purpose and design as item number 25 (D_2O Filter) which is thoroughly covered in section 2.4.10 of this report.

2.2.4 Soup Cooler (Item 7 on E-8623)

PURPOSE

To lower the temperature of the soup flowing from the inner dump tanks to the inlet of the soup feed pump (Item 6). Lowering the soup temperature will reduce the probability of gases coming out of the solution and therefore will reduce the possibility of gas binding the pump.

[redacted]

DESCRIPTION

As shown on drawing D-10107 the soup cooler consists of 11 ft. 6 in. of 3/4 inch schedule 80 stainless pipe with an 11'-2" long, 1-1/4 inch schedule 40 concentric steel pipe jacket welded to the outside. The inlet and outlet of the jacket are made of 1/2 inch schedule 40 pipe, and both ends of the U-shaped cooler are beveled for welding directly into the soup line.

MATERIAL

Type 347 stainless steel was used for the 3/4 inch inside pipe, and the water jacket was made of carbon steel.

BASIS OF DESIGN

After fabrication, the inside pipe was pressure tested at 400 psi and the jacket at 100 psi. The cooler is essentially a counterflow heat exchanger.

1.	Temperature of soup entering cooler	225°F
2.	Soup flow rate	1.4 gal/min
3.	Temperature of soup leaving cooler	148°F
4.	Overall heat transfer coefficient	228 Btu/hr,ft^2,°F
5.	Temperature of water entering jacket	60°F
6.	Water flow rate	6.1 ft/sec
7.	Temperature of water leaving jacket	105°F
8.	Calculated heat transfer area	3.89 ft^2
9.	Actual area (as built)	3.16 ft^2
10.	Safety factor	.8

LOCATION

As shown on drawing D-9052, the soup cooler is located at the bottom of the soup cell. It is mounted in a vertical position at the south end of the cell and is welded directly into lines 149 and 108.

REFERENCES

The following drawings were used in the fabrication and installation of the cooler:

D-9051 - Soup Cell Piping - Plan and Horiz. Sections
D-9052 - Soup Cell Piping - Sectional Elevations
D-10107 - Soup Cooler (Item 7)

[redacted]

2.2.5 Outer Dump Tanks (Items 64a and b on E-8623)

PURPOSE

To provide "ever-safe" storage space for the uranyl sulfate solution when it is necessary to decontaminate or perform work on the soup system.

DESCRIPTION

Both outer dump tanks consist of a 12' long 8" schedule 40 stainless steel capped pipe which has an 11 ft long 10" schedule 40 steel pipe jacket welded to the outside. This jacket is split circumferentially in the middle and the two halves are joined by an expansion joint. The two free ends of the 10" jacket (under the expansion joint) are separated by a 1/2" space, and are supported by a 1-1/2" wide spacer ring which is tack welded to the tank.

As shown on drawing D-8916 the tanks are mounted in a horizontal position, are parallel to each other, have a 24" center to center distance, and are interconnected at both ends. At the bottom of one end there is a 1/2" liquid soup header (line 117) which is fed by the 1/2" soup dump line (113), and at the top of the other end there is a 1" pipe, gas header which may be vented to the inner soup dump tanks. The jackets are supplied with a 1" steam header at one end (line 478) and a 1/2" steam condensate header at the other.

MATERIAL

All surfaces exposed to soup were fabricated from Type 347 stainless steel. Ten-inch black iron pipe was used for the steam jacket, and the expansion joint is a commercial product manufactured by Zallea Brothers of Wilmington, Del - a 12" single corrugation - Figure 7, made of Type 304 stainless steel.

BASIS OF DESIGN

The outer dump tanks are at the lowest point in the soup system so that they may be gravity fed from the inner dump tanks by a line (113) having two remotely operated valves in series. Steam is circulated in the jackets to build up the soup pressure and thereby drive the soup up into the inner dump tanks via the entrance line.

Venting of the outer dump tanks is accomplished by the gas header and line 132 which passes through the end of the condenser (Item 68) and goes to the vapor header of the inner dump tanks after passing through a remotely operated control valve. A by-pass (line 147) from line 132 to the inlet of the charcoal adsorber (Item 16) has

[redacted]

been incorporated in case of vent valve failure or closure during a dump to the outer tanks, and a relief valve set at 150 psi is installed in this by-pass to relieve any excessive pressures during a dump.

Taking the condensate volume as 150 liters, and adding the total amount of soup in the system gives a total soup plus condensate volume of 237 liters (See Basis of Design, Part A of Section 2.2.2). Volumetric capacity of the outer dump tanks is 242 liters, which is more than enough to accommodate the 237 liters of uranyl sulfate solution. After final fabrication, the tanks were pressure tested at 400 psi and the jackets at 50 psi.

LOCATION

As shown on drawing D-8912 the outer dump tanks are buried 9 ft underground, and are located just east of the reactor proper. Each tank is supported by two concrete block saddle supports using asbestos sheeting between the supports and the tanks. Both tanks are pitched toward the west at a rate of 1" in 20 ft.

REFERENCES

Both tanks were fabricated and installed as per the following drawings:

D-8911 - Service Piping - Plans and Details
D-8912 - Service Piping - Sections
D-8914 - Outer Dump Tanks - Plan and Details
D-8916 - Outer Dump Tanks and Condenser Assembly - Plan and Sections

[redacted]

2.2.5a Outer Dump Tank Condenser (Item 68 on E-8623)

PURPOSE:

To remove the heat released by radioactive decay of fission products in the outer soup dump tanks, and thereby prevent the soup solution from boiling dry.

DESCRIPTION:

As shown on drawing D-8915 the condenser consists of a 12' 6-3/8" long, 2", schedule 40, capped, stainless steel pipe jacketed with an 11 ft long, 3", schedule 40, black iron pipe. Two, 2", schedule 40 pipes are used for the inlet and outlet connections to the water jacket, and the 2" condenser pipe is provided with a 1" gas inlet (line 132) and a 1/2" condensate outlet (line 118). Ten inches from the inlet end the condenser pipe and jacket are reduced to 1-1/2" and 2" respectively; and a commercial expansion joint is installed at this point. A 1/2" gas vent, which is essentially an extension of line 132, is provided.

MATERIAL:

Type 347 stainless steel was used for the 2" condenser pipe; black iron for the 3" pipe jacket; and Type 347 stainless steel for the expansion joint.

BASIS OF DESIGN:

Before being dumped into the outer dump tanks the soup solution will be held up in the inner dump tanks for a period of one hour, thereby allowing the radioactive fission products to decay to a level which will limit the dose rate of the solution to biological tolerance at floor level when it is in the outer dump tanks. Both outer dump tanks are buried 9 ft below floor level. After one hour the heat given off will be liberated at a rate of 12.4 Kw (see table 2.6.2A), and therefore the reflux condenser was designed to remove this heat load.

An average cooling water temperature of 100°F, and a soup steam temperature of 212°F were assumed. Using an overall heat transfer coefficient of 60 Btu/(hr)(ft^2)(°F), and the arithmetic mean temperature difference, the required surface area is approximately 6 ft^2.

An expansion joint, manufactured by the Cook Electric Company of Chicago, Illinois, was used to compensate for the difference in expansion between the condenser pipe and jacket; this was

[redacted]

calculated to be approximately 1/8". Cooling water for the jacket is supplied by the emergency cooling system (see Section 2.6) which is essentially a convection loop.

LOCATION:

As shown on drawing D-8916, the condenser is supported by two 2" pipes which are grouted in the same concrete blocks which support the outer dump tanks. The condenser is mounted directly above the dump tanks, and is pitched toward the drainage outlet.

REFERENCES:

The condenser was fabricated and installed as per the following drawings:

D-8911 - Service Piping - Plan and Details
D-8912 - Service Piping - Sections
D-8915 - Condenser for Outer Dump Tanks. Item 68
D-8916 - Outer Dump Tanks and Condenser Assembly Plans and Sections

2.2.5b The Outer Dump Tank Valve Pit

PURPOSE:

To provide an accessible location for the control valves associated with the outer dump tanks, the dump tank condenser (Item 68), and the waste disposal system.

DESCRIPTION:

As shown on drawing D-8913 the outer dump tank valve pit is three feet square and its bottom is at an elevation of 823.0 ft or 7 ft below floor level. A three foot thick heavy aggregate concrete plug covers the pit during operation. Two air operated valves in line 120, the air operated valve in line 132, and the pressure relief valve in line 132, are mounted in a vertical position. Valve 113 B is mounted in a horizontal position; and as shown on C-8324 the body of this valve has been drilled and fitted with an additional opening (line 120) which serves the waste disposal system. The relief valve used in line 147 is manufactured by the Farris Engineering Corporation of New Jersey, and is their 1/2", bellows seal, pressure relief valve, type 3725-S. A 2" stainless steel drain is provided at the bottom of the pit; drainage collected at this point goes to the evaporator feed tank which is located outside the building.

MATERIAL:

Type 347 stainless steel was used for the four control valve bodies which were fabricated by the Fulton Sylphon Company. Specific information such as body size; shape, size, and type of trim material, etc., will be found in the Control Valve Schedule which is Appendix H. The valve superstructures are primarily made of aluminum, and the bellow assemblies are fabricated of brass. Type 316 stainless steel is used for the body, nozzle, disk, and bellows of the pressure relief valve.

BASIS OF DESIGN:

Overall size of the pit was determined by the size and number of valves to be housed; and the 3' thick concrete plug is used to reduce radiations from the soup in the pit to biological tolerance at the operating floor. Depth of the pit was determined by the relative positions of the inner and outer dump tanks, since a gravity feed system is used.

Five valves are housed in the pit; these include the second valve in dump line 113, two valves in series (line 120) serving the waste disposal system, a gas venting valve (line 132) between the inner and outer dump tanks, and a pressure relief valve (set at 150 psi) in line 132 which prevents the buildup of excessive pressures in the outer dump tanks. Sylphon bellows operators are used in place of the common diaphragm type because they will not be effected by the radiation from active soup which would soon embrittle a non-metallic diaphragm.

LOCATION:

Drawing D-8911 shows that the valve pit is located just outside the north east corner of the reactor proper; approximately one foot east of column line number 5 and eleven feet north of column line D.

REFERENCES:

The valve pit was located and constructed as shown on the following drawings:

D-8910 - Service Piping - Plan
D-8911 - Service Piping - Plan and Details
D-8912 - Service Piping - Sections

Valve positions and associated piping are shown on the following drawings:

D-8913 - Outer Dump Tank Valve Pit

The valves associated with the pit are fabricated as shown on the following drawings:

C-8324 - Detail Drain Line Connection on Control Valve in Line No. 113.
D-8976 - Sylphon Valve Actuator Assembly
D-8977 - Sylphon Valve Actuator Details, Sh. No. 1
D-8978 - Sylphon Valve Actuator Details, Sh. No. 2
B-8981 - Bellows Assembly

2.2.6 Soup Gas Condenser (Item 14 on E-8623)

PURPOSE:

To dissipate the heat contained in (1) the solution being dumped from the reactor to the dump tanks, and (2) in the steam generated by the soup evaporator (Item 9).

DESCRIPTION:

As shown on drawing D-8323, the soup-gas condenser consists of a standard Ross heat exchanger (Ross Heater and Manufacturing Company, Incorporated of Buffalo, New York) approximately 3'-2" long with heads modified to achieve an all welded construction. The condenser is mounted vertically, and its bottom head is made of an 8" schedule 40 stainless steel capped pipe 7" long. A cone shaped inlet section (80° included angle x 2" high), rolled from 1/8" stainless plate, is welded to the inside of the bottom head. Two 1" schedule 40 side nipples and one 1/2" schedule 40 bottom nipple are welded to the bottom head, and a 2" schedule 40 top inlet and 1/2" schedule 40 side nipple are welded to the top head which is made of an 8" standard pipe cap.

MATERIAL:

Type 347 stainless steel is used for the tube and body of the heat exchanger, and the heads are fabricated of Type 347 stainless steel.

BASIS OF DESIGN:

Calculations were made following the method as given in the article "Design of Cooler-Condensers for Mixtures of Vapors with Non-Condensing Gases" by A. P. Colburn, Ind. Eng. Chem. page 1178-1182, Vol. 26, 1934.

GENERAL DATA:

Inlet Water Temperature	80°F
Exit Water Temperature	140°F
Water Flow Rate	5 GPM
Overall Heat Transfer Coefficient	85 Btu/hr.ft^2 °F
Inlet Gas Temperature	200°F
Outlet Gas Temperature	155°F
Calculated Heat Transfer Area	27 ft^2
Heat Exchanger Recommended	Ross #603 (34 ft^2)
Heat Exchanger Chosen	Ross #803 (62 ft^2)

Final selection was based on availability, desired safety factor, and future desire to operate at power levels greater than 1000 Kw. A Ross Model #803 "SSCF" single pass heat exchanger has the following specifications:

Tube length	36"
Number of tubes	210
Size of tubes	3/8" O.D. x 22 (BWG) Gage (0.28)
Total area	62 ft^2

PRESSURES:

	Shell (psi)	Tubes (psi)
Design	225	150
Test	450	300

Heat contained in the solution being dumped from the reactor (at 1000 psi and 482°F) will be dissipated by the condenser. During normal operation the condenser will dissipate approximately 150,000 Btu/hr. Gas and steam enter the condenser through the top 2" inlet (which is made large to minimize pressure drop), flows through the condenser tubes, passes through the core inlet of the lower head (which is used to prevent entrainment), and then out line 116 which goes to the flame recombiner inlet.

The bottom head of the exchanger is elongated to provide a reservoir of one gallon capacity, which is a one hour supply for the soup purge pump (Item 92). Excess condensate overflows, into line 130 which goes to the condensate tank (Item 11). Cooling water enters and leaves the shell side of the condenser through two 3" openings which act as diffusers.

LOCATION:

As shown on D-9051 the condenser is mounted vertically in the north east corner of the soup cell with its top at an elevation of approximately 12 ft above floor level (830').

REFERENCES:

The following drawings were used in fabricating and installing the condenser:

D-8323 - Heat Exchanger Heads - Items 14 and 15
D-8311 - Revised Tube Sheet for Ross-Heat Exch #803
D-9051 - Soup Cell Piping
D-9052 - Soup Cell Piping
D-9053 - Soup Cell Equip. Location

2.2.6a Filter for Purge Pump (Item 99 or E-8623)

PURPOSE:

The purpose of this filter is essentially the same as given in section 2.4.10 for the D_2O filter.

DESCRIPTION:

A "Surfamax" filter element as manufactured by the Micro Metallic Corporation of New York was canned in a 3-1/2" schedule 40 stainless steel pipe to form the filter serving the soup purge pump (Item 92). The element is designated as a Micro Metallic filter type S-C-13-P-1/2-C-3/4-I-C.

BASIS OF DESIGN:

(1) Meaning of specification symbols -

S	Type of element	- Surfamax Filter element, porous both sides
G	Pore Diameter	- 165 microns
13	No. of Segments	- 13 circular segments
	Filter Area	- .988 ft^2
P	Spacers	- 1/8" spacers
1/2	Pipe Size	- 1/2" pipe connections
C	Shape of Element	Circular
3/4	Diameter of Internal Passage	- 3/4"
I	Type of Binding	- Internal

(2) Flow Rate - 1 GPH = .017 gal/min

(3) Capacity of Filter - 0-8 gal/min

(4) No provision is made for backwashing the filter, hence the capacity will decrease with time. Since the actual flow rate is 1 gph, it is anticipated that the unit will never require replacement.

(5) This filter is larger than required for this system; however, it was used since it was available on the area, and procurement of another filter would have delayed the installation schedule.

[redacted]

LOCATION:

As shown on D-8645 the filter is located near the west wall of the heat exchanger cell at an elevation of 4' above floor level (830').

REFERENCES:

Installed per drawing D-8645 - Piping Details - 1 gal/hr Pulsafeeder pump.

Surfamax-SMX-Bulletin - Micro Metallic Corporation, New York

2.2.7 Condensate Tanks (Items 11a and b)

PURPOSE:

To provide storage space for the condensate which is required for soup concentration control.

DESCRIPTION:

Two, 7'-6" long, 8" schedule 40, capped, stainless steel pipes are bolted together to form the condensate tanks. The inlet and outlet headers, which are connected to the top and bottom caps respectively, are made of 1/2" schedule 40 stainless steel pipe. Both tanks hang in a vertical position and are supported by means of a common frame yoke which is welded to both tanks. Each tank is wrapped for a distance of 6'-10" with .020" thick cadmium foil.

MATERIALS:

Both tanks and their header connections are fabricated of Type 347 stainless steel. Type 347 stainless is used for the yoke straps which are welded to the tanks, and carbon steel is used for the hanger plates and lower strap.

BASIS OF DESIGN:

The volumetric capacity of the condensate tanks is 5.39 ft^3 or 153 liters. This volume was originally based on the following assumptions:

Volume of high pressure soup system	75 liters
Minimum inventory in dump system	15 liters
Total	90 liters
Volume of dump tanks	240 liters

240-90 = difference or 150 liters

Therefore the minimum capacity of the condensate tanks should be 150 liters.

[redacted]

Using a three kilogram charge of 235, the maximum concentration would be 3000/75 or 40 grams/liter, and the minimum concentration would be 3000/240 or 12.5 grams/liter.

Cadmium foil is used as a neutron absorber since the tanks are not of an "ever-safe" design, and since a concentration greater than the maximum now expected may some day be introduced into the system.

The quantity of condensate present in the tanks is determined by weight. Both tanks are suspended from a Baldwin tension load cell which is in turn connected electrically to a Foxboro indicator. This load cell is shielded from radiation (which may damage the cell insulation) by 2" of lead.

LOCATION:

As shown on D-9052 the condensate tanks are hung vertically in the soup cell such that the bottom of the tanks are at approximately floor elevation (830').

REFERENCES:

Fabricated and installed per the following drawings:

D-9073 - Condensate Tanks - Item 11.
D-9051 - Soup Cell Piping - Plan and Horizontal Sections
D-9052 - Soup Cell Piping - Sectional Elevations
D-9053 - Soup Cell Equipment Location

2.2.8 Steamers (Items 93a and b on E-8623)

PURPOSE:

Item 93a is provided to insure a minimum gas flow through the burner nozzle of the gas flame recombiner (Item 13), and item 93b provides a diluent for the effluent gas stream entering the catalytic recombiner, thereby preventing the formation of localized hot spots which may cause overheating of the bed, and flashbacks into the flame recombiner.

DESCRIPTION:

Each steamer consists of a 13-1/2" length of 4", schedule 40, capped pipe with a 10-3/4" long, 6", schedule 40 pipe jacket welded to the outside. The steamers are mounted in a vertical position, and condensate enters through a 1/2" schedule 40 pipe welded to the bottom. A 1/2", schedule 40, steam exit line is welded to the top of the steamer, and a 1/4", schedule 40, overflow line, which extends into the vessel for a

distance of 14-1/2", is welded to the bottom. One, 1/16" diameter hole is drilled through the overflow pipe at a point 1-1/2" from the end, and a 1" long, 1" O.D., 24 gage, 30 mesh, cylindrical, wire screen is concentrically welded to the pipe to filter condensate flowing through the small hole. One-half inch, schedule 40 pipes are used for the steam entrance and condensate exit lines of the steam jacket.

MATERIAL:

Type 347 stainless steel was used to fabricate the 4" shell and its associated piping. The jacket and its connections were made of carbon steel.

BASIS OF DESIGN:

Each steamer was designed to have a vapor rate of approximately 5 lbs. per hour at 15 psia (1.6 scf/min.). Sludge accumulation is minimized by designing an overflow system which will keep the condensate in constant motion. An overflow opening was designed to provide the minimum flow (5-10 lb/hr) necessary to keep any soluble constituents in solution; and the head required to force the liquid through the small opening is provided by positioning a leg of the condensate inlet line above the overflow opening as shown on drawing D-10105. The need for controlling the composition of the gases leaving the soup gas condenser (Item 14) has been eliminated by installing the steamers which continuously inject steam into the gas stream leaving the soup gas condenser and the soup gas flame recombiner (Item 13).

Heat of vaporization, and the heat absorbed by the overflowing condensate, is supplied by 15 psi saturated steam which is circulated through the jacket surrounding the vapor vessel at a maximum rate of 10 lbs/hr. The overflowing condensate of both steamers is returned to the inner soup dump tanks.

Pressures	Design	Test
Shell	200 psig	300 psig
Jacket	100 psig	150 psig

LOCATION:

Both steamers are located at the top of the soup cell. Steamer 93A which supplies steam to the gas line leaving the soup gas condenser (line 210) is in the north west corner of the cell at an elevation of 8 ft above floor level (El. 830 ft). Steamer 93B which supplies steam to the gas line leaving the soup gas flame recombiner (line 142) is near the south west corner of the cell at an elevation of 9' 10" above floor level (El. 830 ft).

REFERENCES:

Both steamers were fabricated and installed as per the following drawings:

D-10105 - Steamer - Item 93a and 93b
D-9052 - Soup Cell Piping - Elevation
D-9051 - Soup Cell Piping - Plan

2.2.9 Soup Off-Gas Flame Recombiner (Item 13 on E-8623)

PURPOSE:

To recombine the hydrogen and oxygen gases present in the effluent gas stream before it passes to the atmosphere via the cold traps and charcoal absorbers.

DESCRIPTION:

Body. As shown on D-8318 the recombiner consists of a 40" length of 10", schedule 40, stainless steel pipe capped at both ends with a 44" long x 11-1/4" I.D. x 3/16" thick steel water jacket welded to the outside. An adapter piece, to hold a burner nozzle and three spark plugs, is welded in one cap; and a 1-1/2" gas outlet and 1" condensate drain are welded to the other cap. The jacket has a flat head on one end, which is welded to the adapter piece, and is circumferentially welded to the 10" pipe at the other end. 1-1/2" pipe nipples are used as the water entrance and exit openings in the jacket.

Adapter Piece. Drawing D-8319 shows the 4" Dia. x 2-3/4" long adapter which is welded to the end of the recombiner. A 1-1/2" NF12-3 internal thread 1-1/2" long is followed by a conical section 1-3/8" long which blends into the pipe cap. Provision is made for three 18 mm threaded spark plug openings, and a 3/8" pipe thread connection.

Burner Nozzle. The burner nozzle is 4-1/2" long with a 1" IPS thread on one end, and a 1-1/2" NF12-3 thread on the other. The I.D. is turned to a diameter of 1.049" for a distance of 2-1/4" and then relieved to 1.1875" for 1-7/16". This relieved section is followed by the nozzle end which is 9/16" thick and has 187- 1/32" diameter holes drilled thru on 5/64" centers as shown on drawing B-8320. A 1/2" thick x 2-1/2" diameter shoulder is provided with four milled slots to fit a spanner wrench. One steel shim washer is placed between the nozzle and adapter before they are joined by a seal weld.

Spark Plugs. Modified heavy duty truck spark plugs are used in the recombiner. A 1/16" thick x 9/16" dia. disk electrode is used in place of the normal points. When assembled, the spark gap between the disk and the beveled burner nozzle end is from 3/64" to 1/8" wide.

BASIS OF DESIGN:

General. Extensive experimental tests were conducted to determine such design features as the number and size of the nozzle holes, the size and heat transfer surface area of the recombiner, and the rate and efficiency of recombination. Since the results of these experiments are described in detail elsewhere, only general information will be given in this section.

The recombiner system (including the catalytic recombiner item 88) has been found to recombine $2H_2 + O_2$ at all flow rates betwen 0.025 and 15 cfm in the burner chamber. Gas velocity through the burner nozzle must be kept greater than approximately 30 ft/sec. to prevent flashback. At very low flow rates (0.025 to 0.1 cfm) the burner does not operate continuously because the mixture of gas and steam flowing through the nozzle is non-combustible. At higher flow rates (0.025 to 15 cfm) the efficiency of recombination is 100% which means that only the oxygen, which is added to the system for corrosion reasons, plus the active gases will get through to the cold traps and charcoal absorbers.

Calculated Data:

(1)	Cooling water inlet temperature	77 °F
(2)	Cooling water outlet temperature	95 °F
(3)	Average water temperature	86 °F
(4)	Cooling water flow rate	21 gpm
(5)	Heat of recombination	204,000 Btu/hr.
(6)	Gas flow rate	31.6 lbs/hr.
(7)	Average temperature of recombination wall	219 °F
(8)	Average temperature of jacket wall	86 °F
(9)	Experimental heat transfer area	9 ft^2
(10)	Actual heat transfer area	10 ft^2
(11)	Safety factor	1.1
(12)	Design pressure based on ASME Code & a 12-1/2% wall thickness variation	912 psig.
(13)	Test pressure	1375 psig.

Body. Experimental tests indicated that the heat transfer area should be 9 ft^2, and therefore considering the space limitations and nozzle requirements a 16", capped pipe, 40" long was used.

In case of an explosion the maximum pressure would be approximately 300 psi (20 x 15 psi), and therefore schedule 40 pipe was ample for the body shell.

The cooling water annulus was minimized to get the maximum practicable velocity of water for a normal flow of 5 to 20 gallons/min., and thereby get the best possible heat transfer coefficient on the water side. A 1" condensate drain was experimentally chosen to prevent gas binding, and a 1-1/2" gas outlet line was chosen to minimize the pressure drop across the recombiner.

Adapter Piece. Size of the adapter piece was determined by the burner nozzle size, and the number and size of spark plugs required. Three plug openings are located at the top of the adapter to avoid any condensate which may form near the bottom, and the cone shaped entrance of the adapter is designed to keep the spark plugs out of the flame path. Plug openings are set at an angle to produce the proper spark gap width between the disk electrode and the beveled nozzle end.

Burner Nozzle. Calculations were based on the following design which was chosen on an experimental basis.

(1)	Number of holes in nozzle	150
(2)	Size of holes	1/32" dia.
(3)	Pitch of holes	5/64"
(4)	Approximate temperature of flame	5000°F (max.)
(5)	Gas and vapor delivered at constant total pressure of 19 psia	
(6)	Experimental data:	

Dry Gas Flow (cfm)	Composition - % Gas Entering Burner Nozzle	Total Pressure "Hg Abs.	Nozzle Pressure Drop "Hg
3	65.5	37.6	0.95
6	79.9	40.7	1.60
9	82.0	38.1	2.35
12	87.0	39.6	3.45
15	91.1	41.2	4.5

The minimum velocity of the gas flowing must be greater than the propagated flame velocity which has been estimated to be 30 ft/sec. (Ref. Explosion and Combustion Processes in Gases - Jost, Wilhem - McGraw-Hill, New York, 1946). Limits of gas flow were chosen on this basis.

Spark Plugs. Truck plugs were chosen since they were made for heavy duty, and they have a elongated porcelain projection. The electrode disk size was determined by the maximum size that could go through the plug opening and the spark gap distance required between the disk and the nozzle end.

Platinum was used as the disk electrode material to reduce the pitting effect, and the electrode was made in the shape of a disk to keep the spark gap distance constant. A magneto supply operating at a frequency of 8 sparks/sec can supply potentials up to 20,000 volts, which is more than ample to jump the spark gap used. Three plugs are installed; two acting as spares in case of failures.

MATERIAL:

Type 347 stainless steel is used for the 10" pipe body, the adapter piece, and the burner nozzle; SAE 1020 carbon steel is used for the water jacket; and platinum for the spark plug electrode.

LOCATION:

As shown on D-9053 the recombiner is located in the north west corner of the soup cell at an elevation of 11 ft. above floor level (830'). The recombiner was located at this elevation to obtain an 11 ft. barometric water leg, which in turn provides the pressure drop required to force the gases through the off-gas system.

REFERENCES:

Fabricated and installed per drawings:

D-8318 - HRE Primary Flame Recombiner Assembly
D-8319 - HRE Primary Flame Recombiner Head Details
D-8320 - Experimental Burner Nozzle and Gasket
D-9051 - Soup Cell Piping
D-9052 - Soup Cell Piping
D-9053 - Soup Cell Equipment Location

2.2.10 Soup Off-Gas Catalytic Recombiner (Item 88 on E-8623)

PURPOSE:

To recombine any $2H_2 + O_2$ which may escape the flame recombiner, and to operate as the primary recombiner during low gas flow rates.

DESCRIPTION:

Approximately 1.1 lbs of catalyst is housed in a 12" long, 3", schedule 40 pipe section, which has an 8" long, 5", schedule 40 pipe jacket welded to the outside. Two, 3", standard weight, long radius, 90° ells, and two, 3" x 1-1/2", standard weight reducers are welded to the ends of the 3" pipe section. The 5" pipe jacket is split circumferentially in the middle and the two halves are joined by an expansion joint made of 14 gage sheet metal. Two, 1/2", schedule 40 pipe nipples are used for the entrance and exit openings of the jacket. Platinized alumina pellets (Pt. - on - Al_2O_3) in the form of right circular cylinders (1/8" dia. x 1/8" high) are held in position by two pieces of 20 gage x 10 mesh x 3" O.D. wire cloth, backed by two 3/16" thick x 3" O.D. retainer plates which are perforated with 1/4" dia. holes drilled on 5/16" centers.

A 3" O.D. x 1/8" wall tube 2-1/2" long is welded to each retainer plate and it in turn is welded to the 3" pipe section as shown on D-10108.

Two thermocouple wells are welded into the pipe elbows and extend into the catalyst bed for a distance of 2-1/8". Standard 4" long thermocouple wells were used (Manufactured by the Thermo Electric Company) with an 8" well projection made of 1/8" schedule 40 pipe with a 3/16" thick end plug.

MATERIAL:

All components of the recombiner are made of Type 347 stainless steel.

BASIS OF DESIGN:

Reducers were utilized as transition pieces to reduce the recombiner openings to the size of the gas lines serving it. Ninety degree ells were used to permit insertion of the thermocouple wells in the catalyst bed without piercing the recombiner jacket; and the 3" O.D. tubes are used to facilitate positioning of the retainer plates. A jacket is welded to the recombiner, through which steam may be circulated for preheating the catalyst bed, and an expansion joint is necessary to avoid excessive shell stresses due to the difference in expansion of the inner and outer pipe walls.

Although the flame recombiner will recombine at all expected gas flows, it is sometimes more desirable to react the gases in the catalytic recombiner, which can be used to handle flows from 0 to 0.12 cfm without having the bed temperature exceed 400°C. The effluent gas stream going to the catalytic recombiner is diluted by about 5 lb/hr of steam from steamer 93b to prevent the formation of localized hot spots in the catalyst bed. It has been shown that recombiners of this type will operate successfully at space velocities of 100,000 hrs^{-1} or higher, and since the space velocity of this recombiner is only 28,000 hrs^{-1} (A space velocity of 30,000 hrs^{-1} is recommended by D. W. Kuhn et al - ORNL-1209, "The Reaction Between Hydrogen and Oxygen by Catalysis and the Thermal Reaction.") successful operation from this standpoint is assured.

GENERAL DATA

Type of catalyst	Platinized alumina
Size of catalyst	1/8" dia. x 1/8" high
Amount of catalyst	1.1 lbs.
Volume of catalyst	.0214 ft^3
Platinum content	0.3 of 1% by weight
% void space in bed	38%
Max. flow of gas thru bed	.25 cfm
Space velocity (based on composition of 2-1/2% combustible gas)	28,000 hrs^{-1}
Percent conversion	99.5%

LOCATION:

As shown on D-9053 the catalytic recombiner is located at the top of the soup cell and was installed essentially parallel to the off-gas condenser in order to minimize the possibility of the catalyst bed becoming filled with condensate.

REFERENCES:

The recombiner was fabricated and installed as per the following drawings:

D-10108	Low Pressure Catalytic Recombiner
D-9052	Soup Cell Piping
D-9053	Soup Cell Equipment Location

2.2.11 Soup Off-Gas Condenser (Item 15 on E-8623)

PURPOSE:

To dissipate the heat of recombination from the catalytic recombiner, and the heat in the steam generated by steamer No. 93b; also to return any condensate to the inner dump tank.

DESCRIPTION:

The condenser consists of a Ross heat exchanger with modified heads to achieve a completely welded construction. Two 8" standard pipe caps are welded to the exchanger to form the condenser heads. A 1-1/2" schedule 40 pipe nipple is used as the effluent gas stream entrance and a 1" schedule 40 nipple is provided at the other end which goes directly to the cold traps (Item 89). Condensate in the condenser flows directly to the dump tanks by way of a 1/2" schedule 40 opening (line 129).

MATERIAL:

Pipe caps and connections were fabricated of Type 347 stainless steel and Type 316 stainless was used throughout the heat exchanger section.

BASIS OF DESIGN:

Specifications for the Ross single pass heat exchanger #803 "SSCF" are the same as those given in section 2.26 of this report.

This condenser was designed to operate in a gas-bound condition. It actually acts as a dehumidifier for the effluent gas stream, which passes through the condenser tubes. The heat load is approximately 30,000 btu/hr and cooling water (on the shell side) passes through the condenser at a rate of approximately 10 gpm. Calculations indicated that the Ross exchanger was oversized for the heat load; however, final selection was based on availability, a probable low heat transfer coefficient, and future desire to operate the reactor at power levels above 1000 Kw.

LOCATION:

As shown on D-9053, the condenser is located in the southwest corner of the soup cell at an elevation of 12 ft above floor level (830'). It is mounted in a horizontal position, and is pitched away from the inlet opening so that condensate may drain by gravity.

REFERENCES:

D-8323	Heat Exchanger Heads (Items 14 and 15)
D-9053	Soup Cell - Equipment Location
D-9051	Soup Cell - Piping
D-9052	Soup Cell - Piping

2.2.12 Soup Off-Gas Cold Traps (Items 89a and b)

Complete information on the cold traps appears in section 2.80 of this report.

2.2.13 Soup Off-Gas Charcoal Adsorbers (Items 16a and b on E-8623)

PURPOSE:

To adsorb the fission gases present in the effluent gas stream, and thereby hold up the active gases until they have had time to decay to a safe level before being discharged to the atmosphere.

DESCRIPTION:

Approximately 13.94 cubic feet of activated carbon is contained in a pipe coil assembly consisting of 40 ft of 3/4", 1", 1-1/4", 1-1/2", 2", 4", 6" and 48 ft of 1/2" schedule 40 pipe. All fittings and flanges are screwed, and 1/8" nylon gaskets are used. Gases enter the adsorber at the smallest (1/2") pipe line and progress through the larger sizes of pipe in increasing order until they have traversed the entire 328 ft.

The coil assembly is approximately 22 ft long, 5-1/2 ft wide and 1 ft deep. Four thermocouple connections are installed: one in each of the pipe tees following the 1/2", 3/4", 1-1/2" and 4" pipe sections. Each thermocouple adapter is screwed into the end of a tee, and the 1/8" pipe wells extend into the bed for a distance of 2 ft. Both soup off-gas adsorbers are supported in an underground, covered, reinforced concrete pit (the B_2O off-gas adsorber is identical and is supported in the same pit) which has 6" thick walls, and is approximately 10 ft wide, 25 ft long, and 3 ft deep. All the adsorbers are submerged in cooling water supplied by a 3" by-pass line off the steam condenser cooling water outlet (Line 447). This cooling water overflows, and is drained to a nearby ditch.

Two adsorbers are installed in parallel, and valving is provided so that either adsorber may be isolated from the system.

MATERIAL:

Wrought iron pipe is used to fabricate the pipe coils. All fittings are made of cast iron, and the thermocouple wells are made of 1/8" stainless steel pipe. Columbia activated coconut carbon (Grade G, 8 to 14 mesh-granular) is used as the bed material.

BASIS OF DESIGN

In this adsorber the active gas molecules adhere to the activated carbon surfaces in very thin layers. The krypton and xenon gases, which are the most active, are preferentially adsorbed as the gas mixture passes through the bed. Oxygen and hydrogen pass through the bed at a much faster rate, whereas the active gases are slowed up by this adsorbing action. Radioactive decay of the active gases releases energy, which in turn heats the carbon bed. The active gas "front" progresses slowly through the bed and calculations of bed length were dependent upon the time required for the active gases to decay to a safe level.

The adsorbers are designed such that the effluent gas stream passes through the smallest pipe first; and progressively through the larger pipes in increasing order; since the smaller pipe has a greater surface to volume ratio and is therefore able to dissipate the generated heat quickly. Heat generation is greatest when the gases first enter the adsorber, and progressively becomes less as the gases decay, therefore the surface to volume ratio can be decreased and the holdup time increased by gradually increasing the coil pipe size.

The arbitrary specifications were as follows:

Operating pressure	15 psia (atmospheric)
Operating wall temperature	25°C
Gas flow rate	24 scf/day
Adsorption load	Kr and Xe produced at 1000 Kw power level.
Activity discharge	Less than one curie/day.

Preceding the adsorbers, there is a holdup volume of approximately 0.96 ft^3 in lines and equipment. The gas stream passes through a cold trap which removes essentially all the water vapor.

Bed performance was evaluated by extrapolation of the data published in CRC-297 (Canadian report), for temperatures up to 100°C. This information is tabulated below.

PERFORMANCE OF CHARCOAL ADSORBER

Gas Flow std cu ft per day	Holdup Time Before Bed hr	Temp. at Max. °C	Start of Bed Average °C	Holdup Time Xenon days	Discharge curies/day*
6	3.52	106.5	65.8	718	0.0
12	1.78	103.1	64.1	359	0.0
24	0.84	109.5	67.3	179	0.0
36	0.60	109.0	67.0	120	0.0
48	0.46	112.9	69.0	90	0.0
60	0.352	117.1	71.1	72	0.25
90	0.234	131.3	78.2	48	5.2
180	0.117	142.5	83.8	24	120.

*Corrected to curies of 1 Mev/disintegration

At design conditions the average temperature at the end of the 1" section is 27.14°C. This should reach very close to 25°C by the end of the first section of 1-1/4" pipe. The bulk of the bed is therefore close to cooling water temperature. For higher gas flows the temperature will be somewhat higher, but the bulk of the bed will be at cooling water temperature.

The following table summarizes the temperature distribution of the bed in a longitudinal direction for conditions somewhat different from the nominal design data. Data are also shown for the start of the column at design conditions. It is expected that the two gradients would be similar.

TEMPERATURE OF BED

Location ft	Pipe Size in	Average Temperature °C: 20 cu ft/day 1.5 hr holdup	Average Temperature °C: 24 cu ft/day 0.84 hr holdup
0	1/2	58.2	67.3
10		53.0	52.7
20		48.9	50.3
30		44.6	
40		40.6	
40	3/4	54.2	
50		44.7	
60		40.5	
70		36.5	
80		33.4	
80	1	35.6	
100		29.5	
120		27.1	

The portion of the bed covered in the above table is only 3.38% by volume.

One of the assumptions made in the solution of the problem was that diffusion is negligible. This can be justified by considering the 6" portion of the bed in which the diffusion is most significant. The basic differential equation for the bed for isothermal conditions is:

$$\frac{dc}{dt} = 0 = D\frac{d^2c}{dx^2} - u\frac{dc}{dx} - \lambda c$$

where c is concentration of Xe (assumed Xe 133 for the 6" section)
t is time, sec
x is distance along the bed, cm
D is the diffusion constant for Xe in air, estimated 0.16 cm^2/sec., corrected for the presence of charcoal to 3.27×10^{-4}
u is the velocity of Xe in the bed, 1.176×10^{-4} cm/sec
λ is the decay constant, 1.51×10^{-6} sec^{-1}

The solution to the above general equation for a long pipe is:

$$c = c_o e^{-ax}, \text{ where } a = 0.01242 = -(u/2D - \sqrt{u^2 + 4\lambda D}/2D)$$

The solution to the special case where D is 0, is the following:

$$c = c_o e^{-bx}, \text{ where } b = 0.01284 = \lambda/u$$

It is evident that no serious error is introduced with the assumption.

The above calculations were based on a gas flow rate of 24 scf per day at a 1000 Kw power level which was in turn based on the assumption that an excess of hydrogen was released in the system, and thereby the major component of the effluent gas would be this excess hydrogen. Approximately 1.0 cc/day of gaseous fission products are produced. At a later date, it was decided to introduce oxygen into the main soup system to act as a corrosion inhibitor, and therefore there will now be an excess of oxygen in quantities greater than that of the hydrogen originally expected. It is expected that the adsorbers will operate successfully since the system was generously over designed to allow for such contingencies.

An experiment was performed by the MIT Practice School (KT-107, "Action of Oxygen on Activated Charcoal) to ascertain the effect of oxygen on activated charcoal at approximately one atmosphere by measuring the amount of CO_2 formed over a known length of time.

Results were calculated in the form of a reaction rate coefficient, k, defined as the number of grams of carbon burned per gram of bed per hour. A plot was made showing the relation of the logarithms of the reaction rate coefficient to the reciprocal of the absolute temperature. The reaction rate coefficient varied from 5.7×10^{-6} at 100°C to 7.6×10^{-3} at 250°C to 1.7×10^{-2} at 320°C.

It was concluded that at a temperature of 100°C, the reaction rate is slow enough to make an adsorber bed practicable, but at 250°C the reaction is so rapid that the bed would soon be consumed. Therefore, it was recommended that an activated carbon adsorber should not be used, in the presence of pure oxygen, at temperatures much above 100°C.

A vacuum pump, installed between the outlet of the adsorber and the exhaust stack, can be used to evacuate the system for filling, to increase the flow rate if required, to facilitate regeneration of the adsorber bed if the need arises, and can reduce the operating pressure in the dump tanks. A mercury seal pot is installed across the pump to relieve sudden gas surges and to prevent air from entering the system.

All piping used to fabricate the adsorber was schedule 40 and 250 lb cast iron fittings were used throughout. After fabrication and final assembly, the coils were pressure tested.

LOCATIONS:

As shown on drawing E-8919 the adsorbers are located just east of the 7500 building starting at a point approximately 8 ft outside of the exclusion fence. They are housed in a concrete pit which is covered by approximately 4 ft of earth.

REFERENCES:

Both adsorbers were fabricated and installed as per drawings:

D-9036	Charcoal Adsorber Assembly
D-8920	Exhaust Stack - Underground Piping
D-8922	Power Plan
E-8919	Composite Outside Services

2.3 The High Pressure Reflector System

2.3.1 General Description of System Design

The high pressure D_2O system, shown by Figure 2.3.1A, consists essentially of the reflector vessel, the D_2O cooler and the D_2O main circulating pump. Auxiliary equipment associated with this system are the deuterium-oxygen recombiner system, the D_2O return feed pumps and the helium pressurizer system.

The system is designed to maintain a D_2O temperature of 175°C (347°F) at 1020 psi in the reflector vessel for any given reflector level referenced to the core tank centerline, as may be determined by criticality conditions of the reactor. The D_2O is circulated from the bottom of the reflector vessel, at approximately 26 gpm by a totally enclosed centrifugal pump, through a double pipe heat exchanger in which heat generated in the D_2O by radiation absorption is transferred to the main heat exchanger feed water. The D_2O enters the D_2O cooler at 1051 psi pressure and a temperature of 357.4°F and leaves at a pressure of 1020 psi and a temperature of 336.6°F. Boiler feed water enters the annulus of the cooler at a pressure of 220 psi (+) and a temperature of 125°F and leaves at a pressure of 220 psi (-) and a temperature of 207°F. Thus, part of the heat of the chain reaction in the core tank is recovered which in turn reflects in a higher overall system efficiency as a power producer.

Approximately 0.344 cfm of deuterium-oxygen gas mixture is generated in the reflector vessel by the absorption of 46.7 Kw of radiation from the core tank. This gas, mixed with helium and vapor, is educted from the pressure vessel gas space by means of a 3/4 in Schutte-Koerting standard ejector and caused to flow through a platinum on alumina catalyst bed wherein the gases of dissociation are recombined. The driving medium for the ejector is derived by a 20% side stream of D_2O by-passed through a subsidiary cooler around the main D_2O cooler.

The 1020 psi pressure in the pressure vessel is maintained from a bank of standard helium cylinders as explained in detail in Section 2.7. The D_2O is returned to the pressure vessel from the dump tanks at a rate to obtain the desired reflector level by diaphragm type pumps similar to those described in Sections 2.4.11 and 2.1.5.

The D_2O high pressure equipment, with the exception of the pressure vessel, is located in the D_2O cell in the north side of the shield as shown on the D_2O piping and equipment location drawings, Figures 2.3.1B, and 2.3.1C. The D_2O cooler is located at an elevation in this cell such that D_2O cannot drain into the reflector vessel and cause an accidental increase in reactivity. The high pressure D_2O equipment is described in detail as follows.

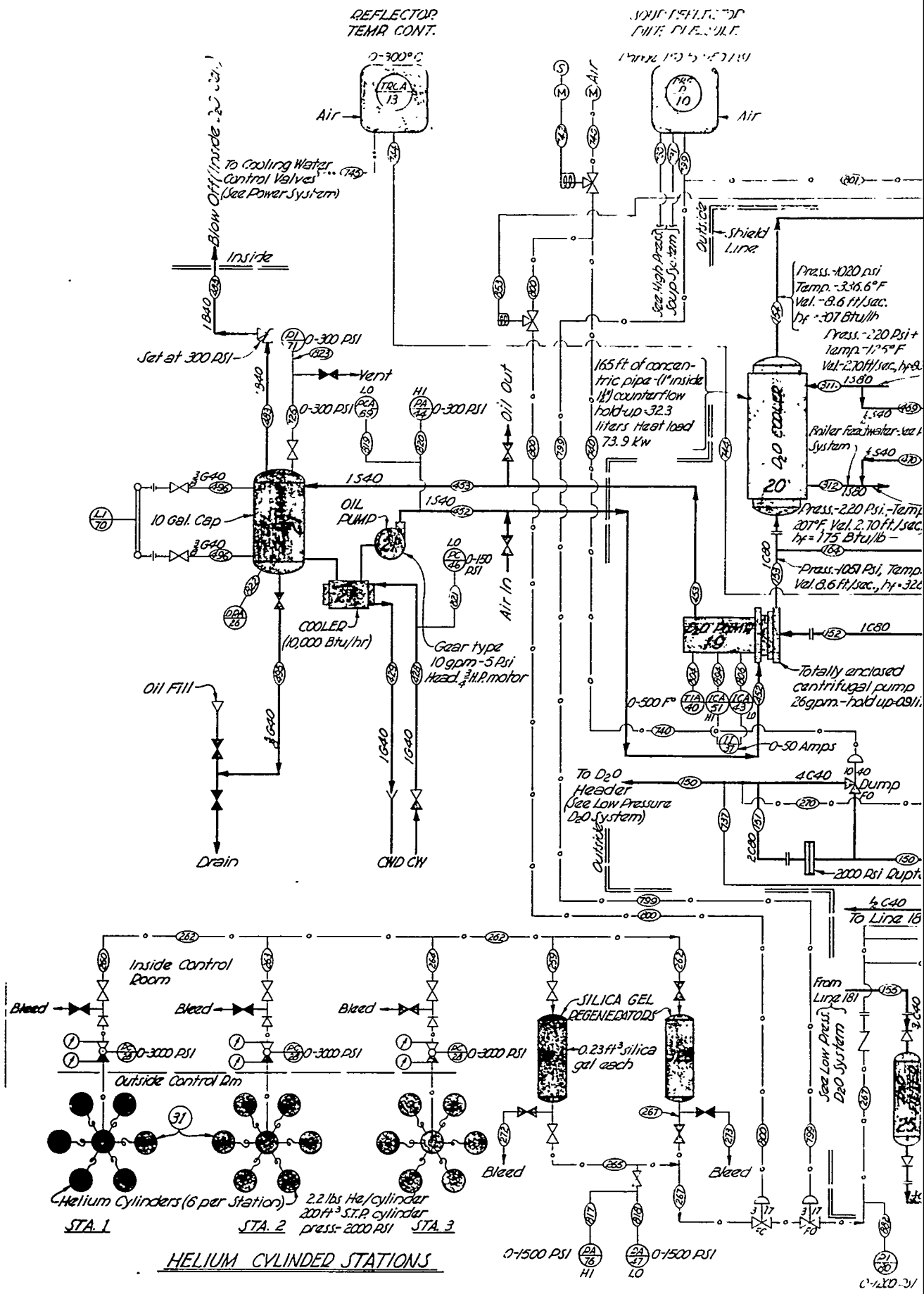
REFLECTOR TEMP CONT.
0-300°C
TRC A 13
Air
To Cooling Water Control Valves (See Power System)
Blow Off (Inside)
Inside
Set at 300 PSI
0-300 PSI
Vent
0-300 PSI
0-300 PSI
Oil Out
Air In
10 Gal. Cap
OIL PUMP
COOLER (10,000 Btu/hr)
Gear type 10 gpm-5 Psi Head. ¾ H.P. motor
0-150 PSI
Oil Fill
Drain
CWD CW
Shield Line
Outside
165 ft of concentric pipe (1" inside 1½" counterflow hold-up 32.3 liters Heat load 73.9 Kw
Press. 1020 psi Temp. 336.6°F Vel. 8.6 ft/sec. hf 307 Btu/lb
Boiler Feedwater (See Power System)
Totally enclosed centrifugal pump 26 gpm - hold up 0.91 l.
0-500 F°
0-50 Amps
To D2O Header (See Low Pressure D2O System)
Dump
2000 Psi Dupt.
To Line 181
From Line 181
See Low Press. D2O System
Inside Control Room
Bleed
0-3000 PSI
Outside Control Rm
SILICA GEL REGENERATORS
0.23 ft³ silica gel each
Helium Cylinders (6 per Station)
2.2 lbs He/cylinder 200 ft³ S.T.P. cylinder press. 2000 PSI
STA. 1
STA. 2
STA. 3
0-1500 PSI
HELIUM CYLINDER STATIONS

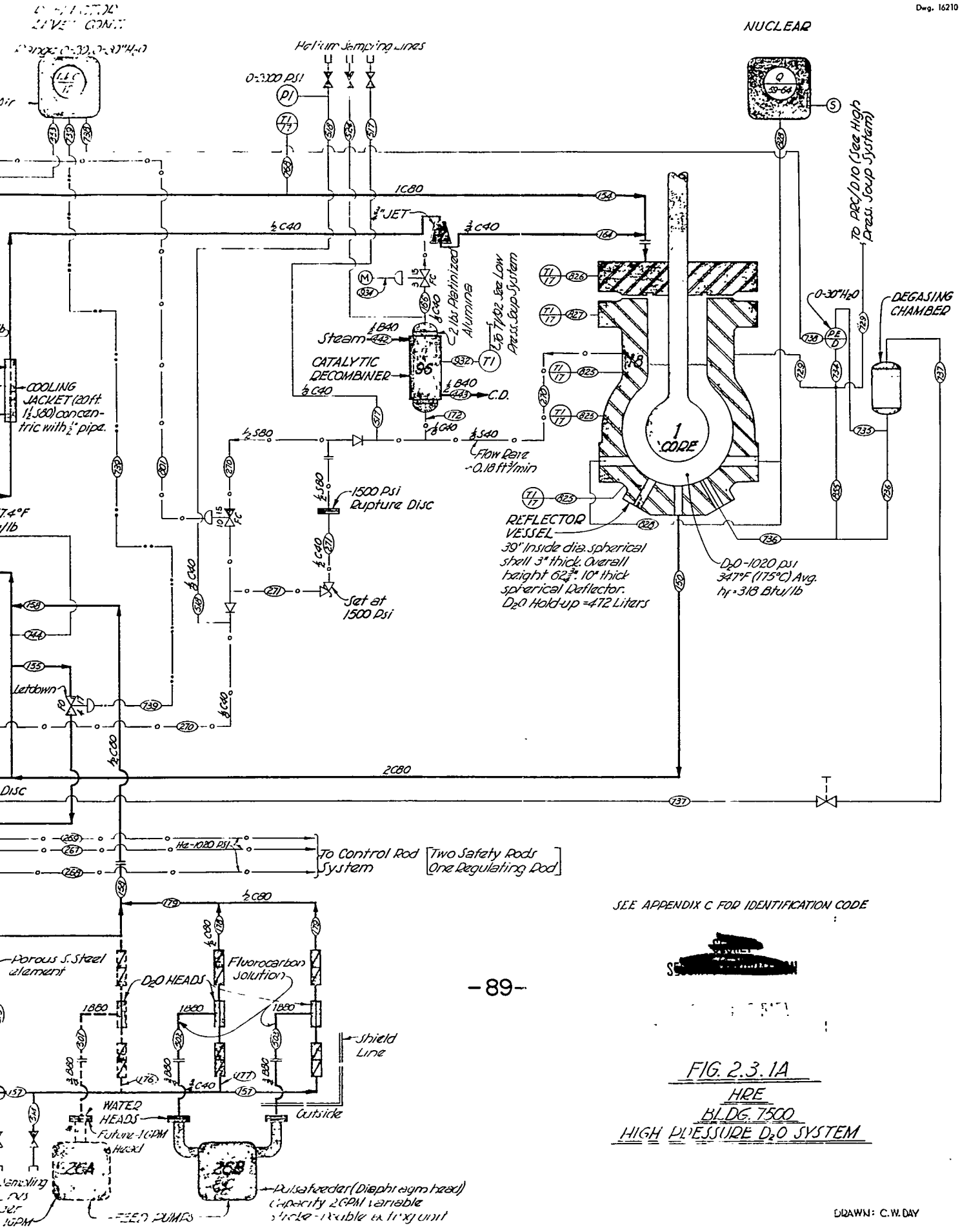

SEE APPENDIX C FOR IDENTIFICATION CODE

[redacted]

FIG. 2.3.1A
HRE
BLDG. 7500
HIGH PRESSURE D₂O SYSTEM

DRAWN: C.W. DAY

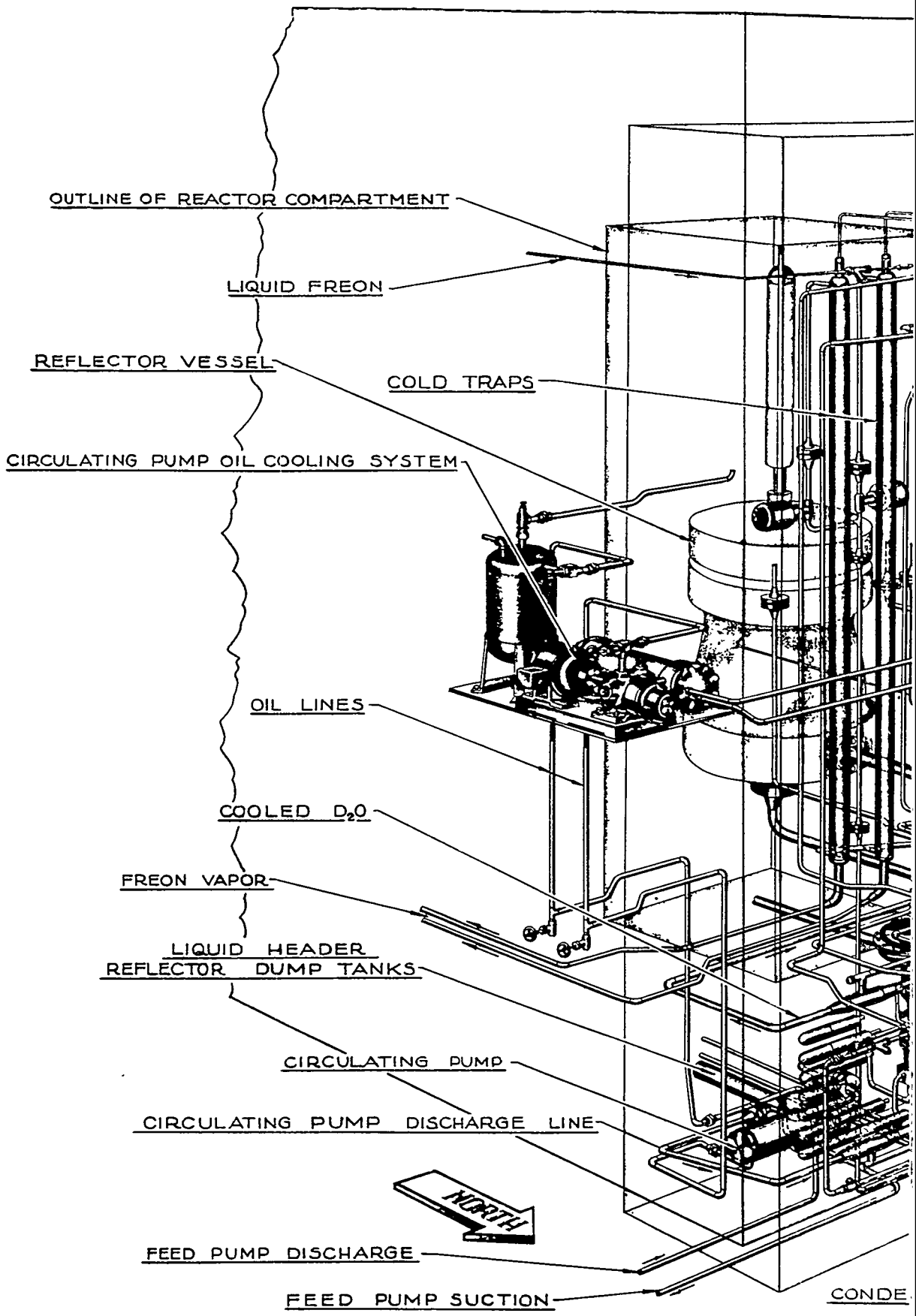

FIG 2.3.1B
REFLECTOR COMPARTM

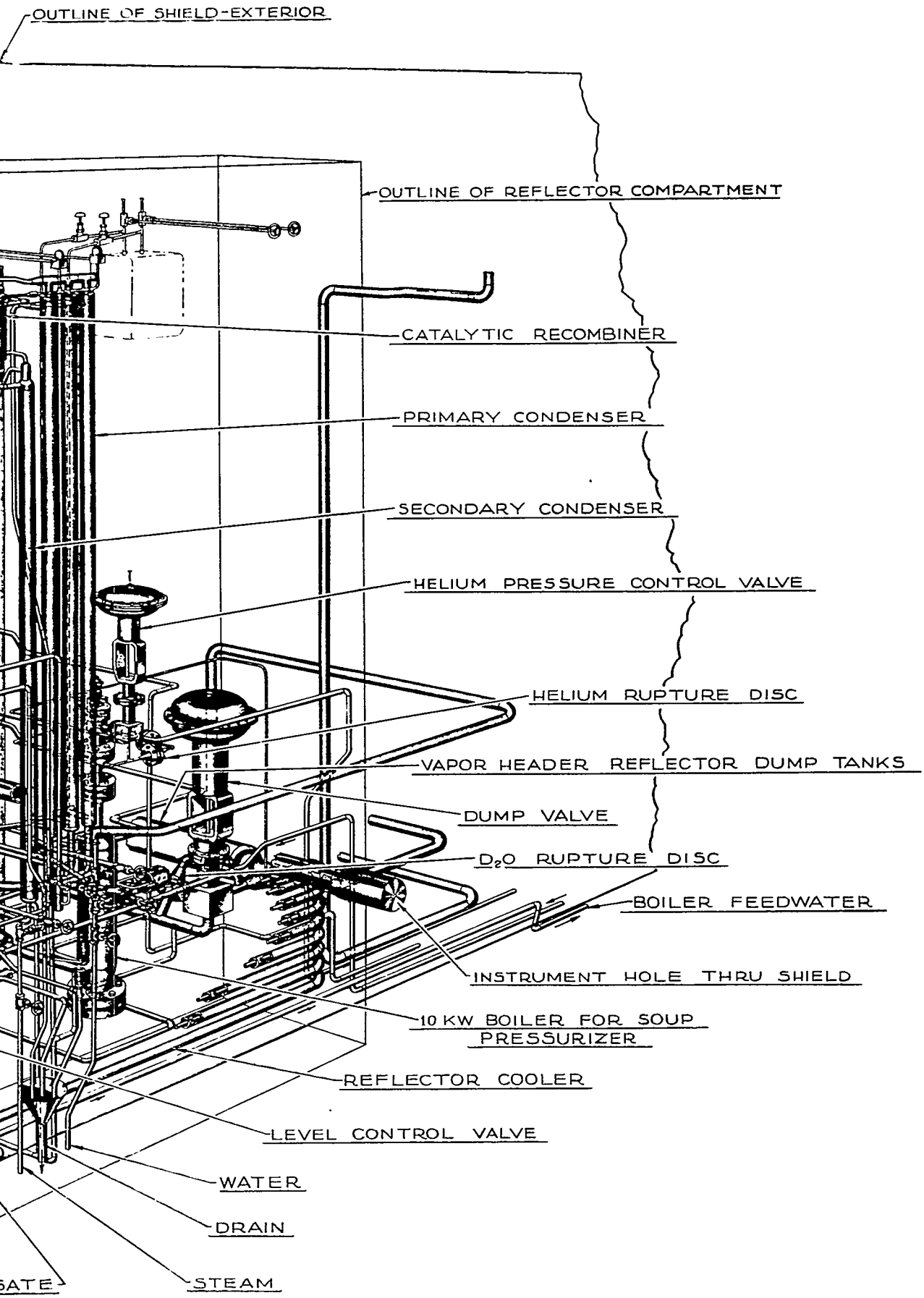

~~OFFICIAL USE ONLY~~

NT PIPING

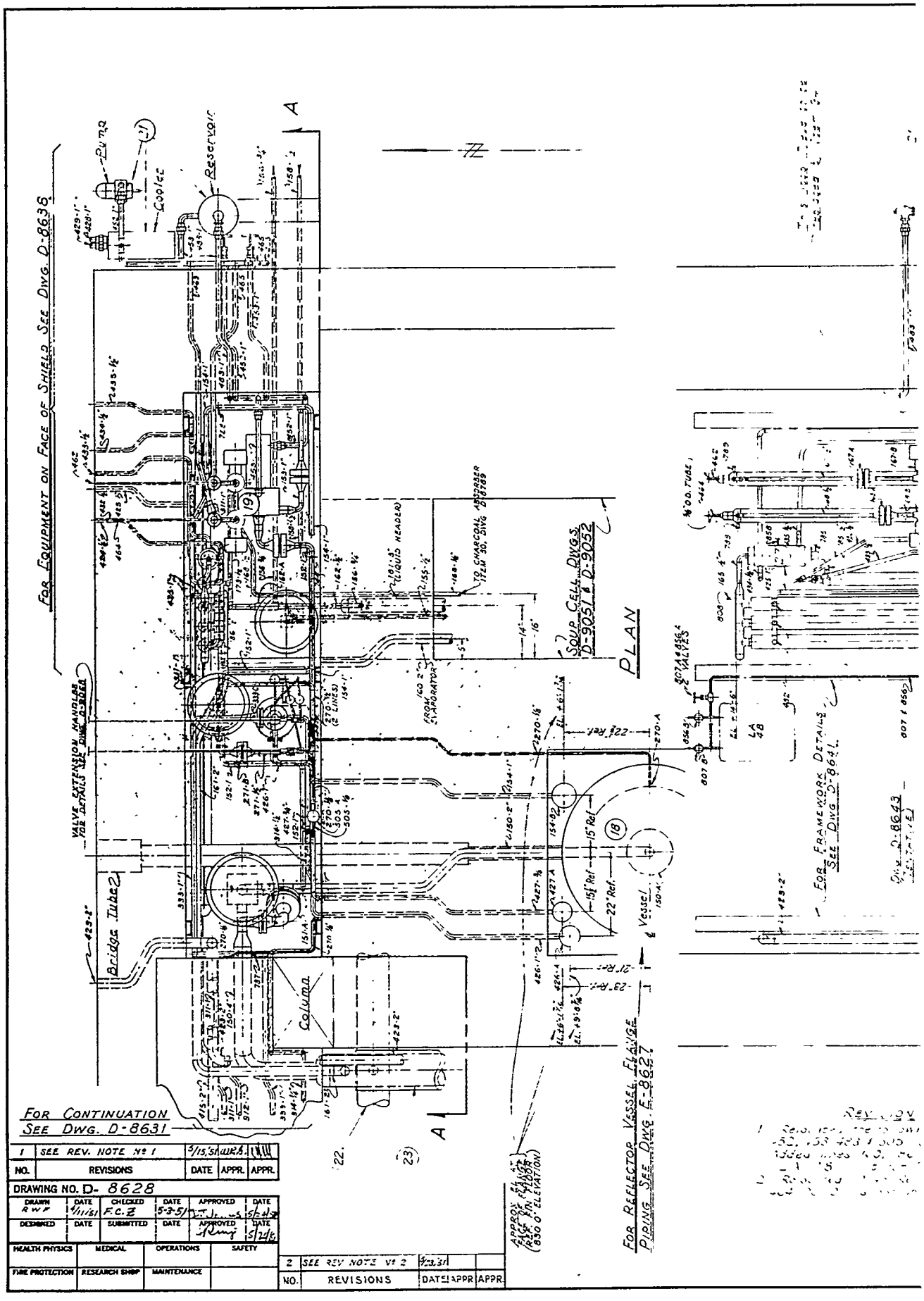

NO.	REVISIONS	DATE	APPR.	APPR.
1	SEE REV. NOTE Nº 1	5/15/51	[illegible]	[illegible]

DRAWING NO. D- 8628

DRAWN	DATE	CHECKED	DATE	APPROVED	DATE
R W F	4/11/51	F.C.Z	5-3-51	[illegible]	5/24/51
DESIGNED	DATE	SUBMITTED	DATE	APPROVED	DATE
				[illegible]	5/24/51

HEALTH PHYSICS	MEDICAL	OPERATIONS	SAFETY
FIRE PROTECTION	RESEARCH SHOP	MAINTENANCE	

NO.	REVISIONS	DATE	APPR	APPR
2	SEE REV NOTE Nº 2	5/23/51		

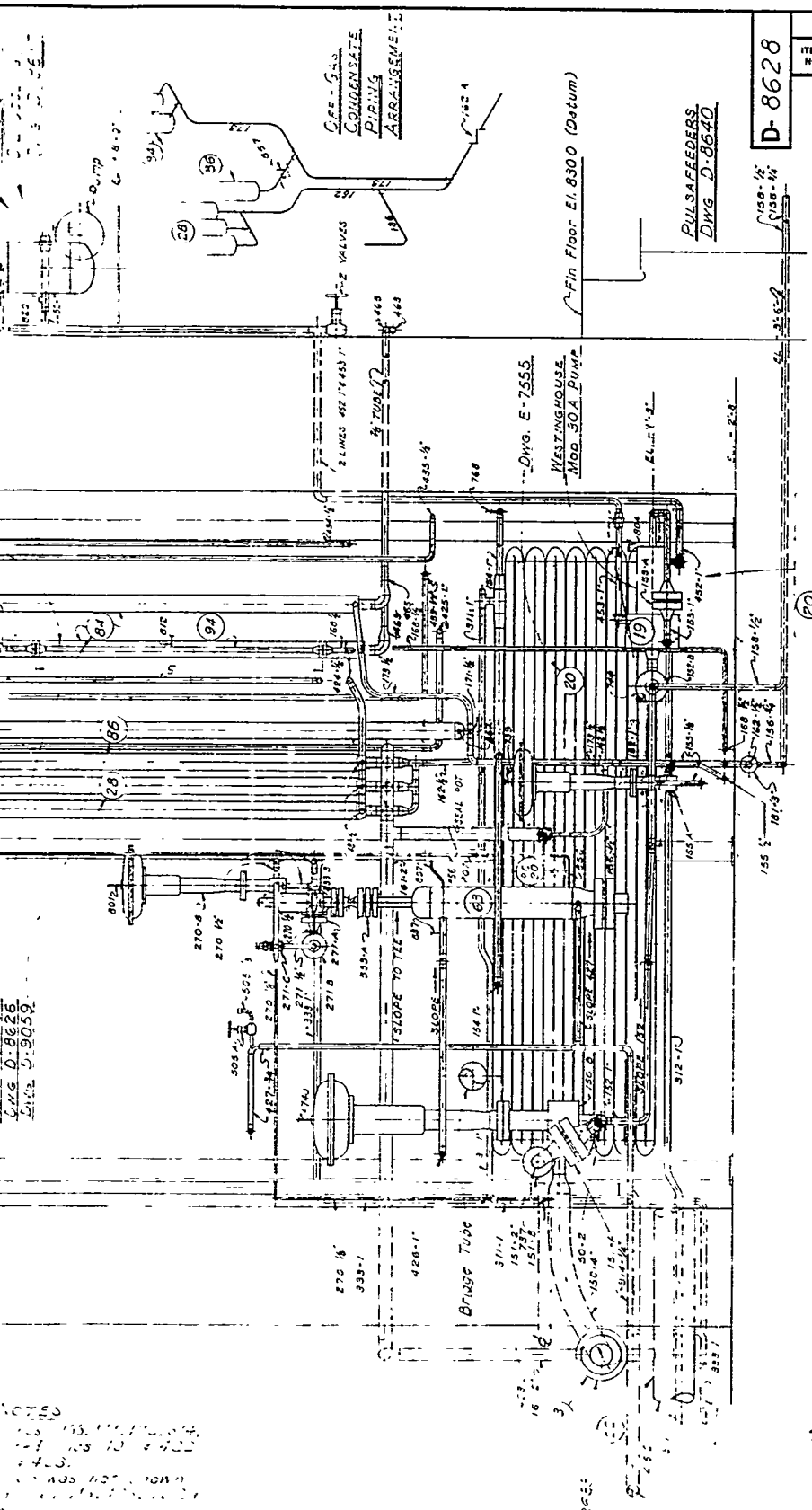

D-8628

MATERIALS LIST

ITEM NO.	DWG. NO.	QTY.	NAME	SIZE	MATERIAL

NOTES

1. Equipment Insulation.

ITEM	DESCRIPTION	INSULATION	THICKNESS
63	10 KW Boiler	Foamglas	3"
84	Cold Traps	Cork	3"
20	D_2O Cooler	85% Magnesia	2"
27	Cat Recomb.	"	3"

2. Piping insulation is not shown on this dwg.

APPROVED FOR CONSTRUCTION

REFERENCE DRAWINGS	DWG. NO.
HEAT EXCHANGER CELL PIPING	D-8631
PULSAFEEDER PIPING	D-8640
SHIELDED AREA - GEN'L LAYOUT	D-8626
NORTH FACE PIPING ELEVATIONS	D-8638
REFLECTOR PUMP OIL COOLING SYS.	D-8617
INNER DUMP TANKS	D-8632
SOUP CELL PIPING	D-9057 & D-9052
REFLECTOR VESSEL FLANGE PIPING	E-8627
HRL FLOW SHEET	E-8628
HRE PIPING SCHEDULE	

THIS DRAWING CLASSIFIED
[redacted]
PER [illegible]

LIMITS ON DIMENSIONS UNLESS OTHERWISE SPECIFIED
FRACTIONS. ± —
DECIMALS: ± —
ANGLES: ± —
SCALE: 3/4" = 1'-0"

HRE EQUIPMENT ~ BLDG. 7500
REFLECTOR CELL
PIPING PLAN & ELEVATION

OAK RIDGE NATIONAL LABORATORY
OPERATED BY
CARBIDE AND CARBON CHEMICALS DIVISION
UNION CARBIDE AND CARBON CORPORATION
OAK RIDGE, TENNESSEE

SUBMITTED	ACCEPTED	APPROVED
[illegible]	C E W [illegible]	[illegible]
WO 380638		D-8628

FIG. 2.3.1C

2.3.2 Reflector Vessel (Item 18 on E-8623)

PURPOSE:

This vessel is designed to contain heavy water under 1020 psi pressure to provide a 10-inch thick spherical reflector for the HRE core.

DESCRIPTION:

The vessel is a comparatively thick-walled spherical pressure tank of 19-1/2 in. inside radius blending by a gradual transition curve into a cylindrical neck of 12 in. inside radius. An external flange of diametral dimensions corresponding to the basic ASA dimensions of a 24 in., 1500 psi rating blind flange is formed to the top portion of the cylindrical neck for the purpose of attaching the top closure. The wall thickness of the spherical shell is 3 in.; that of the cylindrical neck immediately under the flange is 5-1/4 in. The vessel is supported by an integral shoulder machined around the spherical shell with the finished support surface of the shoulder 14 in. below the center of the sphere. The bearing width of the supporting surface thus formed is 4 in. The overall height of the shell is 62-3/4 in. with the finished top flange surface 38 in. above the sphere centerline.

The reflector vessel (Item 18) also includes the top flange closure which basically is an ASA blind flange for a 24 in. pipe. The thickness of the flange is 10 in. to withstand a design pressure 2000 psi. It contains sufficient openings for piping and control mechanism to the reactor.

The vessel and flange are fabricated by a combined process of forging and machining to help improve their mechanical properties. The steel is forged in a manner to eliminate distortions due to possible grain misalignment.

BASIS OF DESIGN:

(a) The spherical reflector shell. 1950 edition of ASME Boiler Construction Code - Section VIII - Rules for Construction of Unfired Pressure Vessels - Paragraphs UG-25 and UG-27.

Design pressure	2000 psi (Max.)
Design temperature	650°F (Max.)
Factor of safety	8 (double that of 1950 ASME Code)
Design stress	7500 psi
Design thickness	2.670 in.
Corrosion allowance	0.330 in.
Total thickness	3.000 in.

(b) Cylindrical neck and integral flange. 1950 edition of ASME Boiler Construction Code - Section VIII - Rules for Construction of Unfired Pressure Vessels - Appendix III. Rules for bolted flange connections for ring gasket types having gaskets entirely within the bolt holes.

Design pressure	2000 psi
Design temperature	650°F
Minimum required bolt load	1,483,000 lbs.
Actual bolt load	2,790,000 lbs.
Flange design bolt load	2,790,000 lbs.
Total flange moment	15,840,000 in-lb

TABLE 2.3.2A

Calculated Flange Stresses

Flange Stresses	Calculated	Allowable
Longitudinal hub stress, S_H	16,000 psi	22,500 psi
Radial flange stress, S_R	10,800 psi	15,000 psi
Tangential flange stress, S_T	6,800 psi	15,000 psi
$\frac{S_H + S_R}{2}$	13,400 psi	15,000 psi
$\frac{S_H + S_T}{2}$	11,400 psi	12,000 psi

Outside diameter of flange hub 34-1/2 in.
Thickness of flange - 9 in.

(c) Top flange closure. 1950 edition of ASME Boiler Construction Code - Section VIII - Rules for Construction of Unfired Pressure Vessels, Paragraph UG-34.

Design pressure	2000 psi (Max.)
Design temperature	650°F (Max.)
Max. allowable stress	15,000 psi
Size of bolts	3-1/2 - 8N-7
Number of bolts	16
Min. requ'd bolt load	1,483,000 lbs.
Req'd initial bolt load for atm. temp. without internal pressure	266,000 lbs.
Flange design bolt load	2,790,000 lbs.
Thickness	10 in.

MATERIALS:

(A) Vessel - forged steel - ASTM-A-105-46 Gr. 1 Est. fin. wt. 11,050#

(C) Top Flange - forged steel - ASTM-A-105-46 Gr. 1 Est.fin.wt. 3,810#

(C) Stud Bolts - alloy steel - ASTM-A-193-49T, Gr. B4 Est. fin. wt. 60#

(D) Ring Joint Gaskets - ASA B 16C-1939. Steel, SAE 1010 Max. brinnel 110

CONNECTIONS:

(A) Pressure Vessel

(1) Six (6) openings, 3-5/8" dia. - 8 in. below center of sphere for nuclear instrumentation thimbles. Connections, 3 in. - 1500 lb flange size (ASA B 16C-1939)

(2) One (1) opening for bottom drain - 2-15/16 in. dia. on vertical centerline of vessel. Connections, 3 in. 1500 lb flange size

(3) Two (2) openings on bottom of tank, 30° with vertical centerline. Connection, 1-1/2 in. 1500 lb blind flange

(4) Two (2) openings into cylindrical neck - 13 in. from top finished surface of vessel. Drill and machine for 9/16 in. O.D. high pressure tubing fitting. Pressurizer gas connection and level indicator.

(B) Top Flange Closure

(1) Three (3) holes equispaced for control plate mechanism - 1.875 to 1.880 dia. Two of holes on 9-1/6 radius and remaining hole (for regulating plate) on 9-7/16 in. radius. Connections for 3'-in. 1500 lb pipe lfnage

(2) One (1) hole in center 3-3/4 in. dia. for core tank to pressurizer outlet pipe. Welded.

(3) One (1) hole - 1-31/32 in. dia. for 1-1/2 in. Sch. 80 core tank inlet pipe. Welded.

(4) One (1) hole - 1-1/8 in. dia. for insertion of source. Welded.

(5) Three (3) holes, 1-1/2 - 8N-2 tapped, equispaced on 27 in. dia. circ. for handling.

(6) Sixteen (16) - 3-11/16 in. dia. drill thru holes for bolting.

(7) Four (4) holes, 1-1/2 - 8N-2 top thru with 2 in. dia. counter bore, 7 in. deep for jacking top flange loose from pressure vessel.

Thermal Stress - The thermal stresses induced in the reflector tank and cover flange are evaluated in ORNL CF 51-6-9. They are shown to be safe for normal operating conditions, and to permit overloads up to 6,400 Kw in reactor power.

These calculations are based on the following boundary conditions and assumptions:

(1) Neutron and gamma currents are attenuated through the shells in a slab geometry.

(2) The inside surface of the reflector vessel is cooled to substantially the heavy water temperature (175°C) by introducing the reflector through the top flange and allowing the flow (30 gpm) to circulate between an inner jacket and the vessel wall.

(3) The outside surface of the vessel is thermally insulated.

(4) The major sources of heat in the vessel are gamma from the reactor, secondary gammas produced from neutron absorption in the iron, and fast neutron reactions.

TABLE 2.3.2B

Total Stresses in Reflector Pressure Vessel at 1000 Kw Power Level and 1000 psi Pressure

	Hoop Stress From Pressure psi	Thermal Stress psi	Total Stress psi	Allowable Stress-psi
Spherical shell	+ 3420	+ 2520	5940	15,000
Cylindrical Neck	3000			15,000
*Cover Flange	± 7500	+ 3490 at inner surface	+ 7500 - 4010	15,000

*For the cover, thermal and pressure stresses are subtractable.

VENDOR AND REFERENCE DRAWINGS:

The reflector pressure vessel, top flange, studs and gaskets were supplied by the Bethlehem Steel Company as approved on their drawings -

Dwg. No. 180941 Spherical Pressure Vessel and Details
Dwg. No. 180940 Spherical Pressure Vessel Assembly

Proof Tests. The reflector pressure vessel with top flange cover assembled was tested to a hydrostatic pressure of 3000 psi and found satisfactory. In addition, the vessel was magnetically tested for flaws.

2.3.3 Reflector (D_2O) Cooler (Item 20 on E-8623)

PURPOSE:

To remove the heat produced in the reflector by radiation absorption and heat conduction from the core. The reflector is to operate at a temperature which will minimize thermal stresses in the core tank wall. The heat is removed from the reflector in a manner which does not detract from the efficiency of the system as a power producer.

DESCRIPTION:

Fabrication of the D_2O heat exchanger is approved on Dwg. E-7555. Essentially, the heat exchanger consists of 165 ft of 1 in., schedule 40, seamless, Type 347 stainless steel pipe concentric with approximately 163.5 ft of 1-1/2 in., schedule 40, carbon steel pipe. The double-pipe heat exchanger thus formed is compacted into an arrangement approximately 10'-3" long, 3' 2-13/16" in overall height by approximately 5-1/2 in. wide, using 180° return bends at 45° to the horizontal to affect the space saving arrangement. All welded construction is used throughout. The exchanger may be considered a double-pipe counter flow feed water heater for the power system boiler in terms of power production.

CONNECTIONS:

Line 130 from the bottom drain connection of the reflector vessel feeds into line 152 to the D_2O circulating pump inlet. Line 153 from the pump outlet is flanged to the bottom 1 in. inner pipe of the heat exchanger. Line 154 from the top of the heat exchanger returns the cooled D_2O to the reflector vessel.

Condensate from the feed water storage tank is pumped through line 311 to the concentric annulus of the heat exchanger and the heated boiler feed hence to the main heat exchanger.

TABLE 2.3.3A

D_2O Heat Exchanger Pipe Connections

Description	Pipe No	Pipe Size	Schedule	Operating Pressure	Operating Temp.	Fluid Velocity	Connection
D_2O Inlet	153	1"	80	1051 psi	357°F	11.6 ft/sec	2500# WN Flange
D_2O Outlet	154	1"	80	1020 psi	336.6°F	11.6 ft/sec	2500# WN Flange
Feed water Inlet	311	1"	80	220 psi+	125°F	2.70 ft/sec	
Feed water Outlet	312	1"	80	220 psi	207°F	2.70 ft/sec	

LOCATION:

The D_2O heat exchanger is located on the lower inside north wall of the D_2O shielding cell as shown in Figure 2.3.1B. The bottom pipe of the exchanger is at an elevation of approximately 828'-9". The bottom of the inside surface of the reflector vessel is 830'-10". Therefore, D_2O can never drain back into the reflector vessel from the heat exchanger and create a hazard by inadvertently raising the reflector level.

BASIS OF DESIGN:

Computations were made on the heating load of the HRE full reflector under various modes of operation. The resulting heat sources are listed as follows for 1000 Kw operation; with the reflector at an average temperature of 347°F (175°C):

1.	Gamma absorption	36.7 Kw
2.	Neutron slowing down	10.0 Kw
3.	Thermal radiation from core	3.2 Kw
4.	Thermal convection from core	24.0 Kw
		73.9 Kw

Pressure drop through the heat exchanger is calculated at 41.2 psi for 30 gpm flow of D_2O. Pressure drop through the connecting pipe lines is estimated at 16.1 psi making the total system drop at 57.3 psi.

Heat transfer. If the reactor is brought up to power with the reflector at 212°F, it may be shown that the heat load may be as much as 105.9 Kw. The required cooling area which has been calculated based on a heat load of 132 Kw. (25% overload) follows:

Heat load = (132)(3415)	= 450,500 Btu/hr
Cooling water flow	= 6 gpm
D_2O flow	= 30 gpm
Overall heat transfer coefficient	= 280 Btu hr-ft^2-$^\circ$F
Log mean temperature difference	= 114°F
Required heat transfer area	= 14.1 ft^2

At 163.5 ft of 1 in. schedule 80 pipe as the fabricated length of effective heat exchange surface, the total available surface area is 56 ft^2, or, apparently, there is a factor of safety of 4 based on the calculated required area.

Probable performance. If it is assumed that there will be an actual flow of 26 gpm of D_2O, 6 gpm of cooling water and taking a heat load of 73.9 Kw, the entrance and exit temperatures of the D_2O and coolant will be:

1. The reflector operates at an average temperature of 175°C (347°F)

2. Temperature differential in D_2O, 20.8°F
   a) Entrance Temperature 357.4°F
   b) Exit Temperature 336.6°F

3. Temperature differential in coolant, 82.5°F
   a) Entrance Temperature 125°F
   b) Exit Temperature 207°F

VENDOR AND REFERENCE DRAWINGS:

Fabricated by X-10 Shops per drawing:

Welded Assembly of Heat Exchanger, Item #20 - E-7555

PROOF TESTS:

Hydrostatic test pressure on inner pipe at 3000 psi.
Hydrostatic test pressure on outer pipe at 900 psi.
All inside pipe is welded and pressure tested before any of outside welds are made.

2.3.4 Reflector Circulating Pump (Item 19 on E-8623)

PURPOSE:

To circulate D_2O at 1020 psi pressure thru the reflector and reflector cooler in a totally enclosed system.

DESCRIPTION:

Figure 2.3.4A shows the construction of the Model 30 totally enclosed centrifugal pump installed as the D_2O circulating pump in the HRE. The pump is designed to operate at an inlet pressure of 2000 psi and a maximum water temperature of 600°F. In general, these pumps will deliver 25 to 30 gpm at 40 psi: at a water temperature of 68°F. To determine the head for any water temperature, t, multiply the head at 68°F by the ratio of the density at t, to the density at 68°F.

As shown on Figure 2.3.4A there are no external shaft-seals, the pump being designed to operate in totally enclosed sealed systems. Therefore, since the motor bearings are water lubricated, the rotor cavity must be supplied with water free of abrasives at all times. The system pressure must be maintained greater than the water saturation pressure at the system temperature to prevent cavitation at the pump impeller. The absolute inlet pressure should be greater than 15 psia at all times, to prevent local boiling in the bearing lubrication films. Any gas leaks which become entrapped in the rotor cavity should be vented. Vent and drain tubes are provided.

MATERIALS:

Materials in contact with the water circuit are as follows:

Casing and Impeller	-	Type 347 Stainless Steel
Shaft	-	Type 410 Steel
Journal Bushing	-	Titanium Carbide
Motor Barrier Sleeve	-	Inconel (wrought)
Labyrinth Discs	-	Nickel
Bearings	-	Carbon Graphite

LOCATION:

The D_2O circulating pump is located in the lower northwest inside corner of the D_2O cell as shown on (Dwg. D-8628), Fig. 2.3.3A.

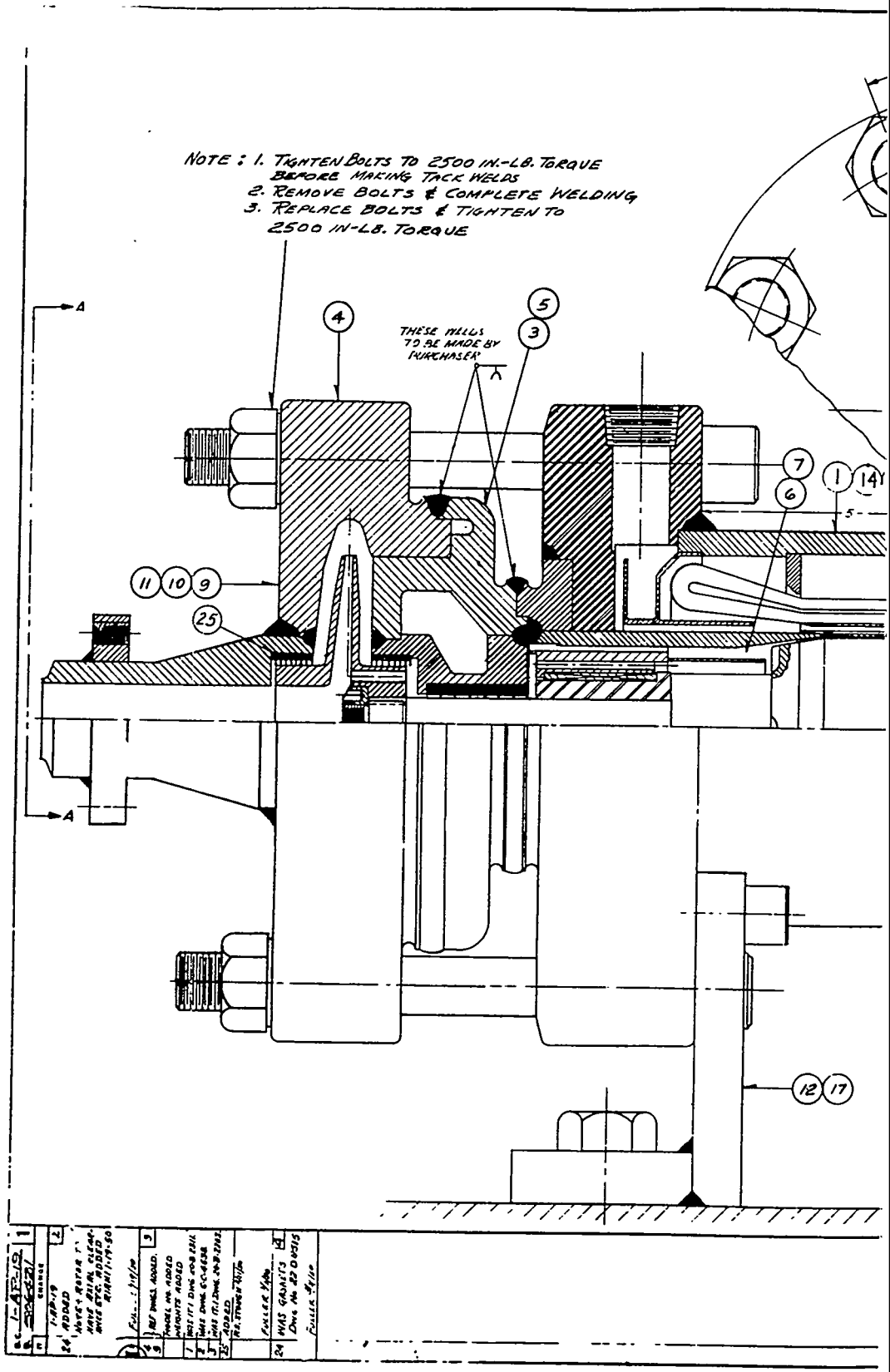
NOTE: 1. TIGHTEN BOLTS TO 2500 IN.-LB. TORQUE BEFORE MAKING TACK WELDS
2. REMOVE BOLTS & COMPLETE WELDING
3. REPLACE BOLTS & TIGHTEN TO 2500 IN-LB. TORQUE
THESE WELDS TO BE MADE BY PURCHASER
A
A
4
5
3
7
6
1
14
11
10
9
25
12
17

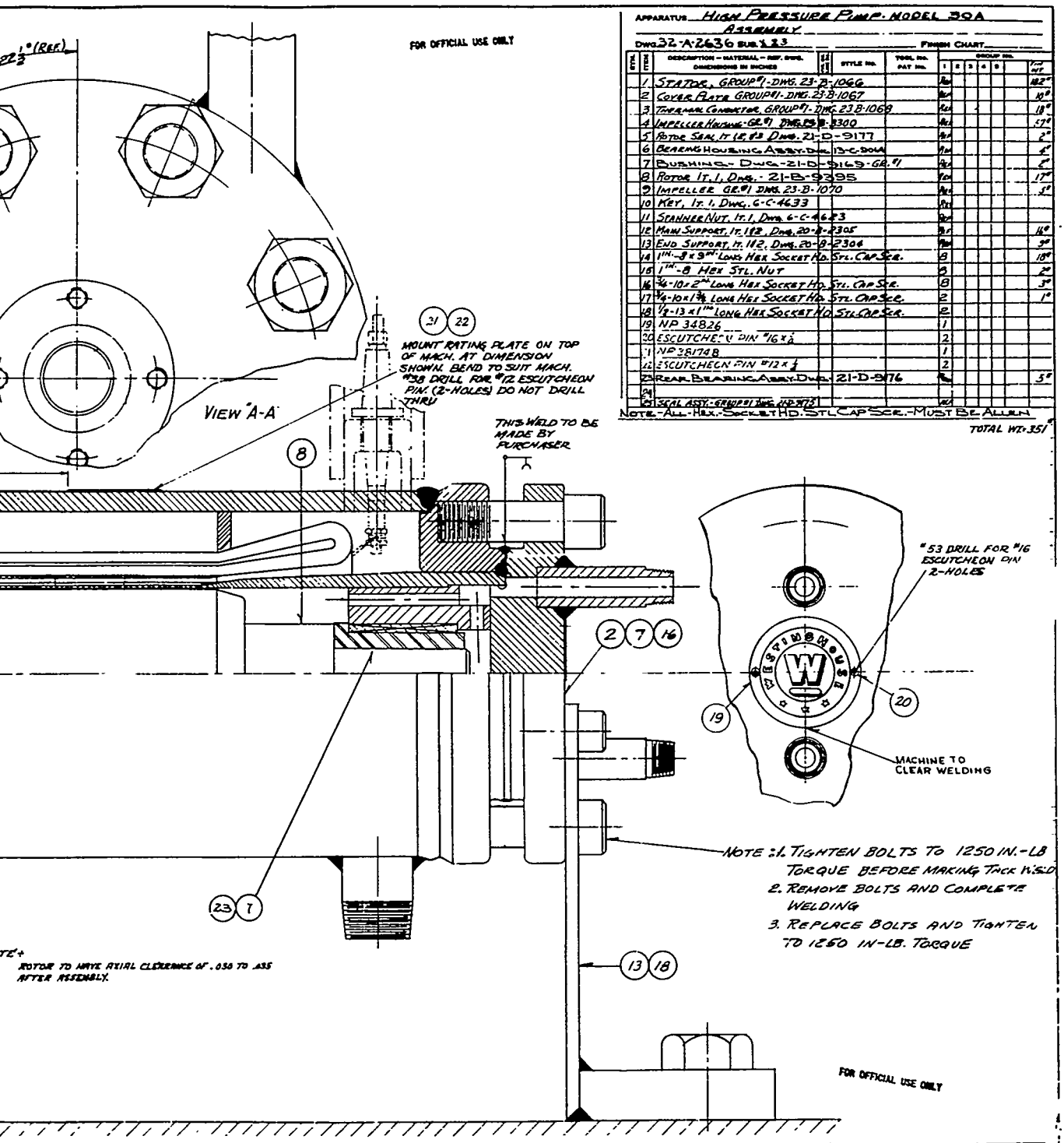

APPARATUS HIGH PRESSURE PUMP - MODEL 30A
ASSEMBLY
DWG 32-A-2636 SUB. 1 & 3 FINISH CHART

SYM.	ITEM	DESCRIPTION – MATERIAL – REF. DWG. DIMENSIONS IN INCHES	STYLE NO.	TOOL NO. PAT NO.	GROUP NO. 1	2	3	4	5		TOT WT
	1	STATOR, GROUP #1 - DWG. 23-B-1066			REF						182#
	2	COVER PLATE GROUP #1 - DWG. 23-B-1067			REF						10#
	3	THERMAL CONDUCTOR, GROUP #1 - DWG. 23 B-1068			REF						18#
	4	IMPELLER HOUSING - GR. #1 DWG. 23-B-3300			REF						57#
	5	ROTOR SEAL, IT. 1 & 2 DWG. 21-D-9177			REF						2#
	6	BEARING HOUSING ASSY. DWG. 13-C-2044			REF						4#
	7	BUSHING - DWG. - 21-D-9169 - GR. #1			REF						2#
	8	ROTOR IT. 1, DWG. - 21-B-9395			REF						17#
	9	IMPELLER GR. #1 DWG. 23-B-1070			REF						5#
	10	KEY, IT. 1, DWG. 6-C-4633			REF						
	11	STAINLESS NUT, IT. 1, DWG. 6-C-4623			REF						
	12	MAIN SUPPORT, IT. 1 & 2, DWG. 20-B-2305			REF						16#
	13	END SUPPORT, IT. 1 & 2, DWG. 20-B-2304			REF						9#
	14	1 IN. - 8 x 9 IN. LONG HEX SOCKET HD. STL. CAP SCR.			8						18#
	15	1 IN. - 8 HEX STL. NUT			8						2#
	16	3/4 - 10 x 2 IN. LONG HEX SOCKET HD. STL. CAP SCR.			8						3#
	17	3/4 - 10 x 1 3/4 LONG HEX SOCKET HD. STL. CAP SCR.			2						1#
	18	1/2 - 13 x 1 IN. LONG HEX SOCKET HD. STL. CAP SCR.			2						
	19	NP 34826			1						
	20	ESCUTCHEON PIN #16 x 1/2			2						
	21	NP 381748			1						
	22	ESCUTCHEON PIN #12 x 1/2			2						
	23	REAR BEARING ASSY. DWG. 21-D-9176			REF						5#
	24										
	25	SEAL ASSY. - GROUP #1 DWG. 21-D-9175			REF						

NOTE - ALL HEX. - SOCKET HD. STL CAP SCR. - MUST BE ALLEN

TOTAL WT. = 351#

FIG. 2.3.4A

TOOL RECORD SPACE

WESTINGHOUSE ELECTRIC CORPORATION

TITLE HIGH PRESSURE PUMP - MODEL 30A
ASSEMBLY

DIMENSIONS IN INCHES - SCALE 1:1

DFTM - RINGLER | APPD. M. | APPD. | APPD. FULLER

32-A-2636

DIV. & PLANT LOCATION ATOMIC POWER DIV.

Dwg. 16211

[redacted]

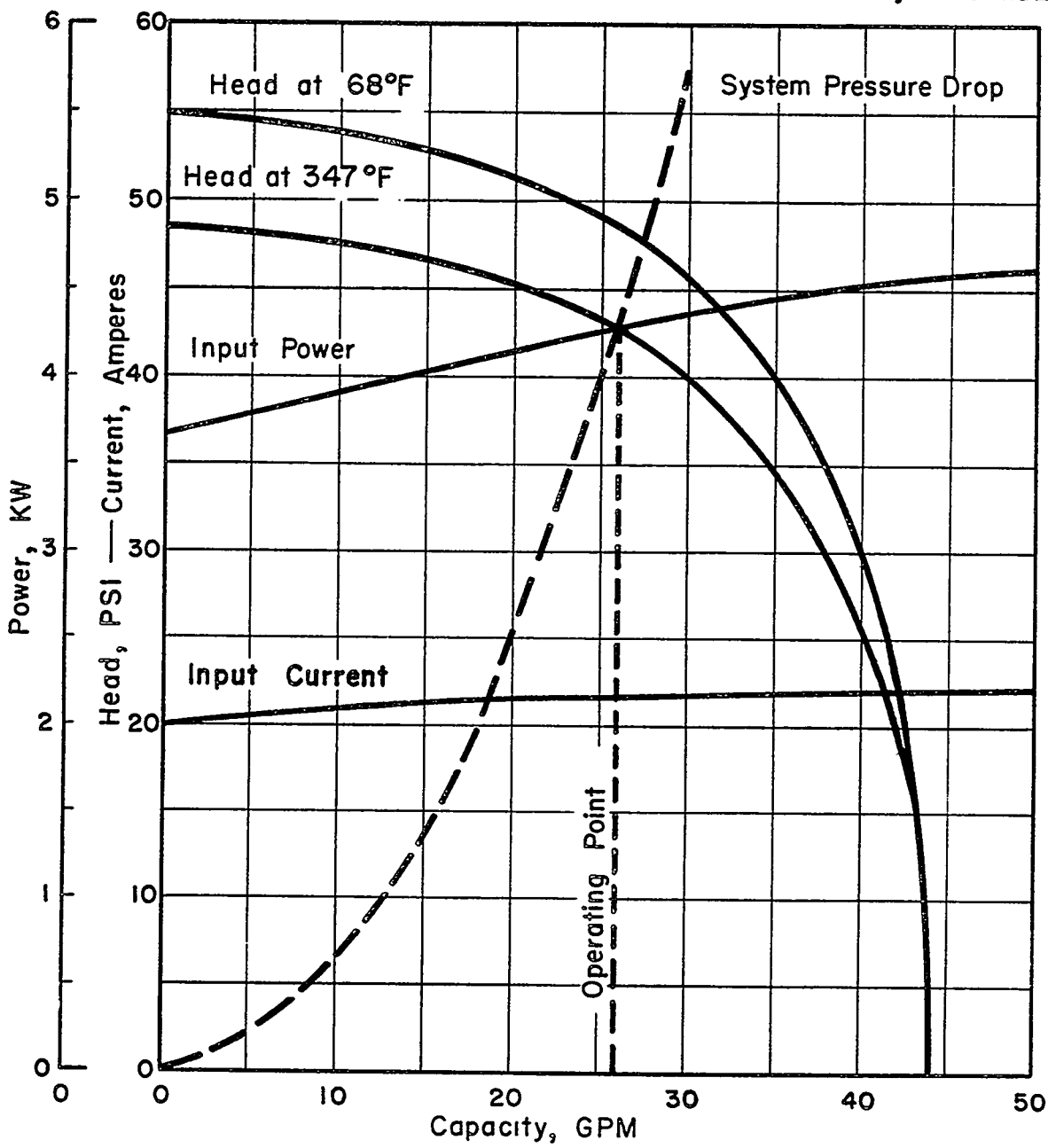

Fig. 2.3.4B. Performance Curves — Model 30-A W Pump

BASIS OF DESIGN:

The Model 30 Westinghouse totally enclosed centrifugal pump was chosen for this application primarily because of its ability to circulate fluid at high pressure in totally enclosed systems.

Figure 2.3.4B shows the performance curves of this pump with the calculated system pressure drop superimposed. This curve shows that the pump will operate at 26 gpm against a system drop of 43 psi with the fluid temperature at 347°F (175°C).

VENDOR AND REFERENCE DRAWINGS:

Westinghouse Electric Corporation per drawings

Outline Drawing	-	30-A-6475
Assembly	-	25-A-8283
Details	-	(See 25-A-8283)

2.3.5 Reflector Off-Gas Recombiner Loop (Item 96 and 97 on E-8623)

PURPOSE:

To recombine the deuterium and oxygen generated in the reflector vessel resulting from absorption of gamma and neutron radiation in the D_2O.

DESCRIPTION:

Essentially, this system consists of Item 96, the catalytic recombiner and Item 97, the jet pump. Line 164 connects into line 153 between the D_2O circulating pump and the D_2O cooler. Thus, part of the reflector flow is directed thru line 164 to the jet pump wherein sufficient pressure differential is created to pull the unrecombined gases mixed with vapor and helium through the catalytic recombiner, in which the D_2 and O_2 are recombined to D_2O and returned to the reflector vessel.

Item 96, the catalytic recombiner, is approved on D-9058. Approximately 2 lbs of platinized alumina are contained in a 4 in. Sch. 80 Stainless Steel pipe between two perforated retainer plates 4-3/4 in. apart. The ends of the 4 in. pipe are capped to provide a closed container. The main body of the catalyst chamber is jacketed with a 6 in. Sch. 40 pipe through which steam may be conducted for initially preheating the catalyst bed or may be used to circulate coolant to conduct away part of the heat of recombination if necessary. Thermocouples are provided to measure and control the catalyst bed temperature.

The jet pump, Item 97, is a standard 3/4 in. Schutte and Koerting steam jet syphon made of Type 347 stainless steel.

LOCATION:

The high-pressure D_2O recombiner system is located next to the inside north wall of the D_2O cell in order to minimize line lengths. The jet is in an elevated position relative to the reflector vessel since maximum efficiency is obtained in the jet when operating against a minimum of back pressure. Locating the jet 14-1/2 ft. above the floor of the cell essentially eliminates back pressure.

The liquid required to drive the jet is obtained by branching off of line 153 and running a 1/2 inch pipe up and over along the south wall of the cell. This line is jacketed to remove heat from the fluid similar to heat removal in the D_2O cooler. Due to the fact that approximately 20 percent of the D_2O is by-passed through the jet and also that efficiency is improved by keeping the drive fluid density high, this cooling is deemed advisable.

BASIS OF DESIGN:

Calculations indicate that approximately 46.7 Kw of radiation will be absorbed by the D_2O in the reflector space at 1000 Kw reactor power. At 100 ev per water molecule dissociation there will, therefore, be approximately 0.344 ft^3/min of deuterium and oxygen gas mixture at STP. This does not consider any back reactions, so may be assumed as maximum. The system recommended is therefore:

1. A catalytic recombiner installed externally to the reflector vessel with the gas circulated by a jet pump.

2. Assumed gassing rate - 0.009 ft^3/min at 1000 psi and 200°C. (equivalent to 0.344 scfm)

3. Gas flow rate $\sim$0.18 ft^3/min

4. Catalyst - 2 lbs platinum on alumina

This will keep the deuterium - oxygen concentration at or below 5% whereas 15% is the safe value.

The 3/4 in. Schutte and Koerting steam jet syphon was specified on the basis of actual tests on this syphon conducted by the Experimental Engineering and Development Group. Results of this test indicate the syphon to have more than adequate capacity and to have a safe operating pressure to 2000 psi.

VENDOR AND REFERENCE DRAWINGS:

High Pressure D_2O Catalytic

Recombiner	-	D-9058	-	ORNL Shops
Jet Pump			-	Schutte and Koerting

PROOF TESTS:

(A) Catalytic Recombiner

1. Pressure test container hydrostatically for 2000 psi.

2. Pressure test jacket hydrostatically for 600 psi.

(B) Jet Pump

1. Hydrostatic test pressure - 3000 psi

2.4 The Low Pressure Reflector System

2.4.1 General Description of System Design

The low pressure D_2O system is shown schematically by Figure 2.4.1A, which also includes the emergency cooling system and the refrigeration system. Essentially, the low pressure D_2O system consists of the dump tanks, the D_2O evaporator, the D_2O gas condensers, the D_2O off-gas condenser, and the D_2O catalytic recombiner. Not shown on this figure are the D_2O dump valve and the return feed pumps which divide the high pressure from the low pressure system. The feed pumps and dump valve are shown in Figure 2.3.1A.

Adequate capacity (614 liters) is provided by the five dump tanks for quickly transferring the contents of the reflector vessel to these tanks as an emergency safety precaution. Also, these tanks are used to store the excess D_2O from the high pressure D_2O system when a change in reflector level in the reflector pressure vessel is desired. Since the dump tanks normally operate at 23 psia, two high pressure diaphragm type pumps are provided to return D_2O from the low pressure to the high pressure system at a rate of approximately 2 gpm. A third unit may be provided to increase the rate to 3 gpm if necessary. At 2 gpm flow, the maximum rate of rise of D_2O in the reflector vessel is considered safe, resulting in a maximum increase in reactivity from this source of approximately 0.010% per sec. By suddenly opening the dump valve, the reflector will flow from the reflector vessel in approximately 10 to 30 seconds, thereby decreasing the reactivity by 26% to 40% K_{eff} and rendering the reactor sub-critical.

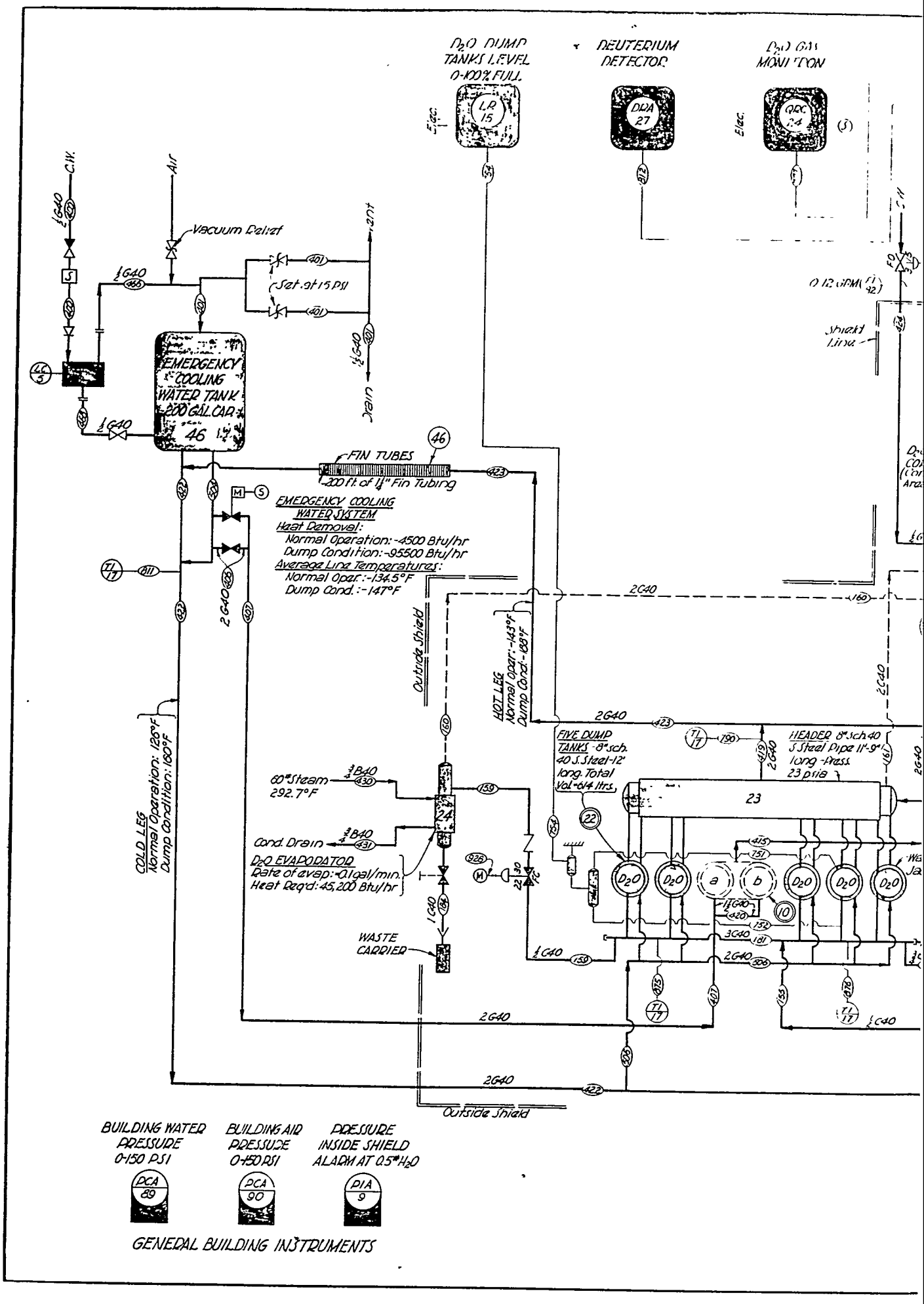
D2O DUMP TANKS LEVEL 0-100% FULL
DEUTERIUM DETECTOR
D2O GAS MONITOR
LR 15
DUA 27
QRC 24
Elec.
C.W.
Air
Vacuum Relief
Set at 15 psi
EMERGENCY COOLING WATER TANK 200 GAL. CAP.
46
Drain
FIN TUBES
200 ft. of 1¼" Fin Tubing
EMERGENCY COOLING WATER SYSTEM
Heat Removal:
Normal Operation: -4500 Btu/hr
Dump Condition: -95500 Btu/hr
Average Line Temperatures:
Normal Oper.: -134.5°F
Dump Cond.: -147°F
Shield Line
Outside Shield
HOT LEG
Normal Oper.: -143°F
Dump Cond.: -188°F
COLD LEG
Normal Operation: 126°F
Dump Condition: 160°F
60# Steam 292.7°F
Cond. Drain
D2O EVAPORATOR
Rate of evap.: 0.1 gal/min.
Heat Req'd: 45,200 Btu/hr
WASTE CARRIER
FIVE DUMP TANKS - 8" sch. 40 S. Steel - 12' long. Total Vol. - 614 ltrs.
HEADER 8" sch 40 S. Steel Pipe 11'-9" long - Press. 23 psia
23
24
22
10
D2O
a
b
BUILDING WATER PRESSURE 0-150 PSI
PCA 89
BUILDING AIR PRESSURE 0-150 PSI
PCA 90
PRESSURE INSIDE SHIELD ALARM AT 0.5" H2O
PIA 9
GENERAL BUILDING INSTRUMENTS

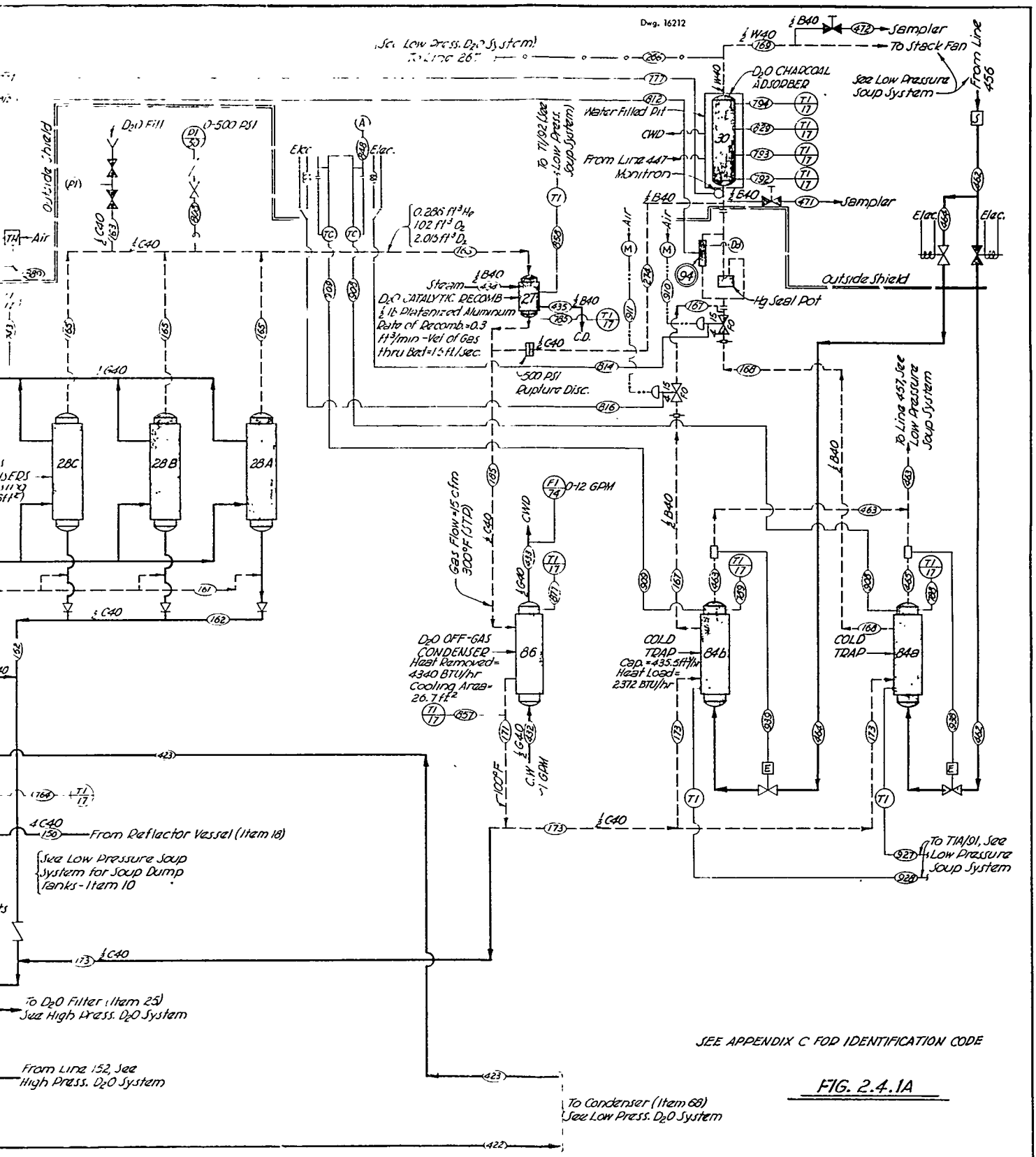

SEE APPENDIX C FOR IDENTIFICATION CODE

FIG. 2.4.1A

HDE
BLDG. 7500
LOW PRESSURE D2O SYSTEM

[redacted]

[redacted]

This document contains restricted data as defined in the [redacted] or [redacted] to an unauthorized person is prohibited.

DRAWN: C.W. DAY

The dump tanks are fabricated from 8 inch schedule 40 stainless steel pipe arranged on centers approximately three times the diameter of the pipes such that the system will be always safe if the fuel in the system accidentally becomes mixed with the reflector and the whole is then transferred to the dump tanks. The tanks are jacketed and the annuli connected to the emergency cooling system to dissipate the radioactive decay energy in event of this occurrence.

At the lower pressure in the dump tanks, the gases of dissociation normally held in solution at 1020 psi will come off and must be recombined at a commensurate rate to prevent the accumulation of a potentially dangerous explosive mixture. These gases are collected in the gas header and are conducted through three condensers in parallel to condense out excess vapor, and hence to a catalytic recombiner containing 1/2 lb. of platinized alumina. The recombined D_2O vapor is then condensed and returned to the system by the off-gas condenser. Non-condensible gases, which may contain radioactive material, are vented through two cold traps to the D_2O charcoal adsorber.

The dump tanks are centrally located in the reactor shielding 22 inches below finished floor level. The remainder of the system is in the D_2O cell as shown in Figures 2.3.1B and 2.3.1C. Following is a detailed description of each item in the low pressure D_2O system.

2.4.2 Reflector Dump Valve (Valve 150 on E-8623)

PURPOSE:

By interlocking the D_2O dump valve in line 150 with the nuclear control circuit, a scram signal will automatically open the valve and allow the reflector to flow from the reflector vessel to the dump tanks, thereby rendering the system sub-critical.

DESCRIPTION:

The valve is a 2-inch, Minneapolis-Honeywell, air actuated, solenoid controlled valve inserted in line 150 in the D_2O cell and so connected that it always fails open. The valve is welded into the system to minimize the chance of leakage. This valve does not control flow by throttling, but is designed to be in either the fully on or the fully off position. The valve trim is stellite to minimize the effect of wire drawing at 1000 psi pressure differential.

BASIS OF DESIGN:

The valve was selected to have a release time of approximately one second and a resistance to flow at 1000 psi pressure differential low enough to allow a complete dump of the reflector vessel in approximately [redacted] seconds. ORNL-1094 (A Manual of HRE Control and Instrumentation) gives a dumping time of 15 seconds. ORNL-731 (A Report on the Safety Aspects of the Homogeneous Reactor Experiment) states that the time for completely emptying the tank is 10 seconds with a reduction in reactivity of about 40% k, whereas, ORNL-826 (HRE Quarterly Progress Report for Period Ending August 31, 1950) quotes a calculated value of 22 sec for flow from the reflector vessel at a level from 6 in above the core tank to the bottom of the core tank. Results presented in ORNL-730 indicate the reflector controls approximately 26% K_{eff}. Because the flow of large amounts of helium to the dump system is wasteful and constitues a nuisance, the dump valve will automatically close before the vessel is completely emptied.

2.4.3 Reflector Dump Tanks (Item 22 and 23 on E-8623)

PURPOSE:

To provide ever-safe storage space for the heavy water in the reflector system.

DESCRIPTION:

The D_2O dump tanks consist of five horizontal 8 in schedule 40 Type 347 stainless steel pipes, 12 ft long arranged on approximately 1'-9" centers, 22 in. below the finished floor level (830 ft). These tanks are arranged in a row running east and west parallel to the "soup" dump tanks, and are numbered consecutively from one thru five. Each tank is sloped to drain into a 3 in. collector header located 14-1/2 in. below the tanks.

The inlet header is constructed from a piece of 8 in. sch. 40 stainless steel pipe approximately 11'-9" long, running north and south over the dump tanks. The center line of this header is approximately 5 in. below the finished floor level (830 ft), and is 4'-9" east of the centerline of the reactor.

Each tank and the inlet header is jacketed with 11 ga. carbon steel sheet 11 in. O.D. The annulus of each jacket is connected to the emergency cooling system.

MATERIALS:

All material in contact with heavy water - Type 347 stainless steel - cooling jacket material - cold rolled carbon steel sheet.

CONNECTIONS:

Line 150 from the bottom drain connection of the reflector pressure vessel is connected to the north end of the inlet header with a 4 in. pipe nipple. An air operated, angle valve inserted in line 150 controls flow. A 2000 psi rupture disc by-passed around this valve provides for excess pressure protection. Each dump tank connects to the inlet header by a 2 in. jacketed pipe nipple approximately 6-3/8 in. long. Each outlet pipe from the dump tanks connects into line 181. Line 161 conducts unrecombined hydrogen and oxygen gas to the D_2O off gas condensers and the low pressure D_2O recombiner.

EQUIPMENT LOCATION:

The D_2O dump tanks are the outer five of seven horizontal 8 in. schedule 40 jacketed pipes, centrally located in the reactor shielding and at an approximate elevation 828'-2". (22 in. below floor level). Each tank is separated by an 8 in. concrete wall. Approximately 5'-0" of high density concrete shields the dump tanks from the building space.

BASIS OF DESIGN:

(A) Volume requirements

Net volume in main circulating system

1.	Full reflector (level 10 in. over core tank)	472.0 liters
2.	Cooler	32.3 liters
3.	Circulating Pump	0.9 liters
4.	Pipes in circulating system	11.2 liters
5.	Dump line above dump valve	1.2 liters
		517.6 liters

Minimum inventory of D_2O in dump system

1.	Lines with level at bottom of horizontal dump tanks	18.9 liters
2.	Evaporator with level at bottom of horizontal dump tanks	20.0 liters
3.	Lines to evaporator	1.3 liters
4.	Filter	1.0 liters
5.	Pulsafeeders (3)	1.5 liters
6.	Lines to and from pulsafeeders	4.7 liters
		47.3 liters

Total D_2O in system		564.9 liters
	or	149 gallons

(B) Volume of dump tanks - includes outlet header and connecting nipples to bottom of dump tanks.

1.	Volume of tanks at 32.4 gals/tank	162 gallons
2.	Volume of exit header	4 gallons
3.	Volume of connecting pipe nipples	negligible
	Total	166 gallons

(C) Maximum allowable working pressure - ASME Boiler Construction Code Sect. VIII. Rules for Construction of Unfired Pressure Vessels - 1950. Par. UG-27.

$$P = \frac{S\,E\,t}{R + 0.6\,t}$$

Thickness of 8 in. sch. 40 pipe	= 0.322 in.
Corrosion allowance (t/6)	= 0.054 in.
Thickness of shell exclusive of corrosion allowance	= 0.268 in.
Maximum allowable working pressure	= 970 psi

(D) Criticality of dump tanks. It is conceivable that on a sudden rupture of the core tank the fuel solution may mix with the D_2O. Calculations, substantiated by experimental evidence, show that an 8 in. diameter pipe of infinite length and surrounded by an infinite water reflector filled with pure water containing pure U-235 requires eight kilograms of U-235 per 12 ft length for criticality. This corresponds to a solution with 66 grams per liter of U-235. The actual anticipated loading is 40 grams per liter or 4 kg. of U-235 in 100 liters of solution. If it is assumed that a rupture of the core allows this to mix with the reflector which is then transferred to the dump tanks, the loading will be 4 kg. of U-235 in 665 liters of mixed fuel solution and D_2O, or 6 grams U-235 per liter of mixture.

VENDOR AND REFERENCE DRAWINGS:

Fabricated and installed by X-10 personnel per drawings:

Dump Tanks - Details	D-8633
Emergency Cooling System	E-9066
Inner Soup Dump Tanks	D-9592

TEST PRESSURES

8 inch dump tanks	1500 psi
Cooling jackets	50 psi

2.4.4 Reflector (D_2O) Evaporator (Item 24 on E-8623)

PURPOSE:

Due to corrosion of the reflector vessel, the reactor core tank and the control plates, the reflector system will become contaminated with metallic ions. The presence of these ions in concentrations of a few parts per million at the temperature level of the reflector promotes decomposition of the D_2O into D_2 and O_2 when irradiated. To prevent the build up of these ions, it is proposed to purify the reflector by a process of continuous distillation.

DESCRIPTION:

A 6 in. diameter, schedule 40, stainless steel pipe 53 in. long is jacketed on its lower end by an 8 in. schedule 40 steel pipe 22 in. long. Steam at 60-100 psi is admitted to the jacket through a 3/4 in., schedule 40, steel pipe as the heating medium. D_2O vapor is conducted away through a 2 in. schedule 40 pipe welded to the top of the still body. Sediment remains behind and is removed periodically through a draw-off to the outside of the shield. It was originally intended that a centrifugal separator be inserted in the vapor space of the still to remove entrained liquid from the vapor stream. However, this liquid separator was deleted on drawing D-8625. The D_2O vapor condenses on the surfaces of the gas header and piping.

MATERIALS:

All material in contact with D_2O is Type 347 stainless steel. The jacket and steam piping are carbon steel.

LOCATION:

Shown on Fig. 2.1.1B and C (Dwg. D-9052) Soup Cell Piping Plan and Elevations. Item 24 is 4'-4-1/2" south of the centerline of the reactor soup cell, the bottom of the still being approximately 3 in. above the floor of the cell. This item is placed in the soup cell rather than in the D_2O cell since gravity is depended upon to feed D_2O from the dump tanks to the evaporator. The floor elevation in the D_2O cell does not permit such installation unless a pit is excavated especially for this purpose.

BASIS OF DESIGN:

(1)	Rate of evaporation	0.1 gal/min
(2)	Heat required	45,200 Btu/hr
(3)	Overall heat transfer coefficient	187 Btu/hr-ft^2-°F
(4)	Steam pressure	60 psia
(5)	Steam temperature	292.7°F
(6)	Jacket temperature	215°F
(7)	Average temperature difference	77.7°F
(8)	Required heat transfer area	3.2 ft^2
(9)	Length of 6 in. pipe jacketed	22 in.
(10)	Vapor velocity in 6 in. pipe	1.82 ft/sec.

VENDOR AND REFERENCE DRAWINGS:

Fabricated and installed by ORNL Shops per drawings.

Soup Cell Piping Plan and Elevations	D-9052
D_2O Evaporator	D-8625

2.4.5 D_2O Gas Condenser (Item 28, a-b-c on E-8623)

PURPOSE:

Moisture condensed on the platinized alumina pellets of the catalytic recombiner has been found to deter the recombination of deuterium and oxygen. A gas condenser is, therefore, installed in the system between the recombiner and the D_2O dump-tank header for the purpose of partially dehumidifying the influent gas stream.

DESCRIPTION:

The condenser consists of three parallel sections of 1-1/2 in., Sch. 40, Type 347 stainless steel, seamless pipe 10'-9" long, each section jacketed by a 2 in., Sch. 80, black iron pipe. Gas vapor mixture is introduced into the bottom of each section from a 2 in., Sch. 80 header welded to the condensing sections by a short 1-1/2 in. saddle nipple. The mixture is directed in an upward direction into the condenser body by a 1 in., Sch. 40 elbow welded to the inlet nipple. Cooling water is introduced into the cooling jacket from a 1/8 in. pipe nipple welded to the jacket and connected to a 1/2 in. water supply line. The water enters a 3 in., Sch. 40, pipe cap which is flared into the jacket for distribution.

D_2O vapor is condensed out of the gas stream on the inner surface of the 1-1/2 in. pipe and condensate flows down the sides to collect in a 1/2 in. pipe return header to the dump tanks. Dehumidified deuterium and oxygen mixture is conducted from the top of the condensers to a 1-1/2 in. collector header and hence to the recombiner through a 1/2 in. Sch. 40, Type 347 stainless steel pipe.

BASIS OF DESIGN:

The calculated condensing area of 9.1 sq.ft. was originally based on the assumed use of a #803 Ross Heat Exchanger using the method of calculation explained in Industrial and Engineering Chemistry, Nov. 1934, for a condensible gas in a non-condensible gas. Results of these calculations are tabulated as follows:

TABLE

Graphical Solution to Determine Area of D_2O Condenser

Point No.	1	2	3
tg, °F	212	150	90
tw,	83.3	82.2	80
Δt	128.7	67.8	10
μg, cp	0.0219	0.0209	0.021
G, #/hr.ft^2	40.3	36	34.7
Re	292	274	263
j	0.032	0.034	0.035
h_s	2.31	2.19	2.17
k	$0.428/P_{gf}$	$0.402/P_{gf}$	$0.399/P_{gf}$
M_m	4.3	4.3	4.0
λ, Btu/#	970.3	1008	1043
Pr, atm	1	0.253	0.0475
t_c, trial & error	84.3	86.9	80.7
P_c (atm)	0.054	0.043	0.0357
Pg	26.15	26.95	27.16
Pgf	27.16	27.16	27.15
Pgf	26.7	27	27.16
u ΔT	338	152	22
q	1651	613	0
$10^3/u\ \Delta T$	2.96	6.58	45.5

Plotting q in Btu/hr. against $\frac{10^3}{uA\ \Delta T}$ and integrating graphically, an area of 9.146 sq.ft. minimum was found necessary.

Due to the relatively high pressure drop through the proposed Ross Heat Exchanger, and the urgency of the time schedule for completion of the HRE, it was decided to design and fabricate this condenser (as explained in the description) from available

pipe fittings. The actual installed unit has a condensing area of 12.6 ft^2 resulting in a safety factor of approximately 1.4.

MATERIAL OF CONSTRUCTION

(1) Piping and condenser body - Type 347 stainless steel
(2) Cooling water jacket - Black iron pipe

EQUIPMENT LOCATION

Installed vertically against the inner north wall of the reflector cell between the D_2O recombiner and the dump tank gas header.

REFERENCES:

(1) Unpublished memorandum by L. Carter.
(2) Installed per ORNL drawings:
Reflector Condenser (Item 28) - Dwg. D-9059
Reflector Cell Piping - Dwg. D-8628

2.4.6 Low Pressure Catalytic Recombiner for D_2O Off-Gas (Equipment Item 27 on E-[redacted])

PURPOSE:

To recombine the deuterium and oxygen dissociated in the reflector and released from solution in the dump tanks when the reflector is dumped.

DESCRIPTION:

The recombiner consists of a 2 in., schedule 40, stainless steel pipe, 10 in. long, closed at both ends with 2 in., standard weight caps. Approximately 1/2 lb of platinized alumina is contained in the mid section of the chamber between two perforated retainer plates on 5 in. spacing. The catalyst bed is surrounded by a 4 in., schedule 40, steel pipe forming an annulus through which steam may be conducted for preheating and drying the bed, or which may be used for coolant to conduct away a portion of the heat of recombination. The catalyst chamber is fully described on drawing C-9068.

MATERIALS:

(1) Catalyst Chamber - Stainless Steel (any austenitic)
(2) Cooling Jacket - Carbon Steel

CONNECTIONS:

Shown on Flowsheet E-8623 (Figure 1.1A) and in Figure 2.4.1A (Layout of Low Pressure Reflector System) and described by the HRE Flowsheet Line Schedule.

LOCATION:

The Low Pressure D_2O Off-Gas Catalytic Recombiner is located next to the inside north wall of the reflector cell at approximate elevation of 12'-9" above the finished floor elevation of 830.0 ft and 3'-7" west of the inner east wall of the cell. The catalyst chamber is in a vertical position with the gas influent entering the top of the chamber through line 165 directly from the top of item 28 (D_2O Gas Condenser). The flow of gas is downward and directly into the top of Item 86 (D_2O Off-Gas Condenser). Thus, the barometric leg of condensate in Item 86 and piping is available to help create a pressure differential to cause flow of gas through the catalyst bed.

BASIS OF DESIGN:

(1) Reflector operating conditions - 1020 psi and 175°C

(2) Maximum concentration of D_2 and O_2 gas mixed with helium and D_2O vapor above the reflector - 5% by volume.

(3) From solubility curves by Smith, Katz, et al, the computed amount of each gas at STP is
0.286 ft^3 of He
1.02 ft^3 of O_2
2.015 ft^3 of D_2

(4) Time of recombination - 10 min.

(5) Rate of recombination - 0.3 ft^3/min.

(6) Velocity of gas thru catalyst bed - 1.5 ft/sec.

(7) Pressure drop Negligible

VENDOR AND REFERENCE DRAWINGS:

Fabricated and installed by ORNL Shops per drawings:

Low Pressure Catalytic Recombiner for D_2O Off-Gas	- C-9068
Reflector Cell Piping	- D-8628

PROOF TESTS:

Jacket hydrostatic test pressure - 600 psi
Catalyst chamber test pressure - 2500 psi

2.4.7 D_2O Off-Gas Condenser (Item 86 on E-8623)

PURPOSE:

To pre-cool the non-condensible off-gases from the D_2O Catalytic Recombiner and condense out the recombined D_2O vapor.

DESCRIPTION:

The D_2O Off-Gas Condenser consists essentially of a 10'-0" long section of 1-1/2", Sch. 40, stainless steel Type 347, longitudinal finned pipe enclosed in a 3", Sch. 40, stainless steel pipe 10'-2-1/2" long capped at both ends with a 3", Sch. 40, stainless steel pipe cap. The influent gas vapor mixture enters one end of the 3" pipe enclosure through a 1/2", Sch. 40 pipe, flows through the annulus of the condenser (outside of the finned pipe) and out the opposite end through a 1/2", Sch. 40 pipe nipple welded to the side of the cap. Cooling water is admitted to the condenser through a double pipe arrangement consisting of an extension of the 1-1/2" finned tube with part of the fins removed and a 3/4", Sch. 40 pipe welded concentrically with the 1-1/2" pipe. The 1-1/2" pipe extends out of one end of the 3" pipe and is capped off. The 3/4" pipe extends through this cap and is welded thereto. The other end of the 1-1/2" fin tube is also capped, hence, the cooling water entering the 3/4" pipe must return down the annulus between it and the inside of the 1-1/2" pipe and, hence, out through a 1/2" nipple welded to the side wall of the 1-1/2" pipe. With this arrangement, thermal stresses due to differential expansion between the two pipes are avoided. Rod spacers welded to the pipes keep them concentric, but are attached in a manner to avoid the development of constraints. The design is fully described on drawing D-8620.

BASIS OF DESIGN:

(1) Helium flow rate. 15 CFM (STP)

(2) Rate of recombination of D_2 and O_2 in catalyst 0.3 CFM

(3)	Temp. of mixture entering condenser	300°F
(4)	Temp. of gas leaving condenser	100°F
(5)	Cooling water flow rate	1-5 GPM
(6)	Cooling water entrance temperature	80°F
(7)	Overall heat transfer coefficient	3 Btu/hr ft^2-°F
(8)	Heat removed	4340 Btu/hr
(9)	Calculated required cooling area	17.4 sq. ft.
(10)	Required length of 1-1/2 in. fin tube at 2.67 ft^2/ft of length	6.5 ft.
(11)	Installed length	10.0 ft.
(12)	Factor of safety	1.5
(13)	Calculated orifice diameter to limit helium off-gas flow to 15 CFM(STP) based on max. pressure of 400 psi	0.037 inch

LOCATION:

The D_2O Off-Gas Condenser is installed in a vertical position on the north wall of the D_2O equipment cell between the catalytic recombiner and the D_2O gas condensers and at an elevation which places the upper end of the condenser just under the outlet nozzle of the catalytic recombiner.

REFERENCES:

Fabricated and installed by ORNL per drawings:

Off-Gas Condenser - D-8620
Reflector Cell Piping - D-8628

2.4.8 D_2O Cold Traps (Item 84 a and b on E-8623)

Described in Section 2.8 of this report.

2.4.9 D_2O Charcoal Absorber (Item 30 on E-8623)

Described in Section 2.2.13 of this report. (Same as item 16)

2.4.10 D_2O Filter (Item 25 on E-8623)

PURPOSE:

Suspended particles in the entering fluid to the Pulsafeeder return pumps tend to lodge in the passages and seats of the check valves preventing their proper operation. If these particles should lodge between the Pulsafeeder diaphragm and the pump body, they tend to become stress raisers and thereby cause premature failure of the diaphragm. To prevent these occurences, a filter element is installed in the discharge line from the D_2O dump tanks to the inlet of the Pulsafeeder pump to filter out any such particles.

DESCRIPTION:

The filter unit consists of a porous stainless steel filter element, internally reinforced for 100 psi pressure drop, inserted in a filter body fabricated from Type 347 stainless steel, 3-1/2 in., schedule 80 seamless pipe, capped at both ends. Fluid enters the filter body in such a manner as to flow through the filter element from the outside surface inward. The filter element is similar to Filter Element HP-4-S-C-26-N-1-C-3/4-0-E Grade C, mean pore opening 165 microns, material type 347 stainless steel as manufactured by the Micro Metallic Corp., Brooklyn, N. Y.

BASIS OF DESIGN:

1) Capacity. 30 gpm flow (design)

2) No provision is made for washing filter, hence the capacity will slowly decrease with time. Since the actual flow thru the filter is of the order of 2 gpm, it was anticipated that the unit would not require replacement for the life of the reactor.

3) Maximum pressure drop ~ 100 psi.

4) Chosen for maximum filter surface in minimum volume.

a)	Filter surface area	286 sq. in.
b)	Filter body volume	93 cu. in.
c)	Surface area to volume ratio	3.0

5) Recommended maximum flow capacity - at 300 gpm/ft^2 for 2 ft^2 is 600 gpm at 2 psi pressure drop.

6) Meaning of Specification symbols in drawing D-7558.

S - Type of element - Sulfanex filter element, porous both sides.

C - Mean pore diameter - 165 microns

26 - Filter area (No. of segments) - 1.98 ft^2 and 26.

N - Spacers - No spacers.

1 - Pipe size - 1 in. pipe size.

c - Shape of element - circular

3/4 - Diameter of internal passage - 3/4 in.

O - Type of binding - External

E - Element container - Element only

EQUIPMENT LOCATION:

Located per drawing D-9589. In outer D_2O Pulsafeeder pit.

REFERENCES:

Fabricated and installed by ORNL per:

Dwg. D-7558 - Filter Assembly and Details
Dwg. D-9589 - Piping for Soup and D_2O Pit

2.4.11 The D_2O Return Feed Pump (Item 26 b and c on E-8623)

PURPOSE:

To pump D_2O from the dump tank into the high pressure D_2O circulating system.

DESCRIPTION:

The D_2O return feed pump is essentially the same as the soup system feed pump (Item 6) of section 2.1.5, however the drive unit is double acting -- driving one diaphragm head on the forward stroke and another head on the reverse stroke. The two heads can be driven at the same time to give a maximum flow rate of two gallons per minute.

During a filling operation both heads pump until the D_2O level in the reflector vessel rises to an "almost full" position. At this point a switch trips an air valve which is located in the pressure line of the reverse head and by-passes the oil, thereby stopping the reverse head. The forward head continues to operate until the proper D_2O level is reached - at which time the pump motor is automatically cut out. When the level drops the motor is again started and the forward head again pumps. An adjustable stroke mechanism is incorporated which allows manual adjustment of the flow rate.

MATERIAL:

Materials used in fabricating the pump parts are identical to those for the soup pump as described in section 2.1.5.

BASIS OF DESIGN:

The pumping unit is manufactured by the Lapp Insulator Company, Incorporated, of Leroy, New York, and is identified as their Pulsafeeder Model 5-200D since this is a double-acting unit with two primary heads.

A fluorocarbon ($C_8F_{16}Cl$) is used as the hydraulic medium between the remote reagent heads and the primary unit heads; first because it has a density greater than D_2O, and if a leak occurs at a remote head the heavier fluorocarbon would tend to remain in the outside D_2O pit which is the lowest point in the system; and second the fluorocarbon does not contain hydrogen which would complicate the separation process required to recover the D_2O in the event of a break at the remote heads.

A Micro Metallic Corporation porous type 347 stainless steel filter element is canned in a 3-1/2" schedule 80 pipe to form the filter assembly which is located in the inlet line from the D_2O dump tanks to the reagent heads.

LOCATION:

The primary drive unit with its two diaphragm heads is located at floor level (830') in the service room which is just south of the reactor proper as shown on drawing D-9060.

The remote heads are located at the bottom of the D_2O pump pit (8'-9" below floor elevation of 830') which is just east of the reactor structure. A one foot thick concrete plug covers the pump pit.

REFERENCES:

Lapp Bulletin No. 309 - Installation and operating instructions
Lapp Pulsafeeder Model 200.
Lapp Insulator Company, Incorporated. Drawings Nos.
No. 5-4357 Pulsafeeder Model 5-200D
No. 3829 Remote Welded Head Assembly

ORNL Drawing
No. D-8322 Revised Pulsafeeder Head

The D_2O feed pump system was installed as per the following drawings:
D-9589 Piping Details for Soup and D_2O Pits
D-9591 Miscellaneous Details

2.5 The Power System

2.5.1 General Description of System Design

The Power System will be covered in six sections as given below. Each will be taken up individually in the order listed.

A. General
B. Power Cycle
C. Normal Operation
D. Instrumentation and Safety Devices
E. Radioactivity of Steam
F. Main System Pipe Layout
1) Thermal Stress Analysis
2) Hanging and Anchoring

A. General

A report written by Dr. A. M. Weinberg* states that one of the objectives of a successful pilot model homogeneous reactor is to demonstrate useful electrical power production from a homogeneous circulating system. Since the homogeneous reactor is a source of relatively low temperature thermal energy, economical production of electrical power is foreseeable only by use of steam power equipment. Selection and installation of steam turbine generating equipment for the HRE presented no problems requiring special design or development work. Because the design is not dependent on the usual engineering studies based on cost analysis, the problem is simply one of securing the maximum thermal efficiency and reliability within limits of available funds.

---

* "Outline of Program for Design of Pilot Model of Homogeneous Power Reactor" - 7-15-49, CF 49-7-135.

The HRE is expected to release a total of 1000 Kw of useful heat at full output; about 90% of this being in the ma. heat exchanger and the remainder in the reflector fluid heat exchanger. If the latter is used for feedwater heating, it may be expected that at full load the steaming rate will be about 3,000 lbs of 200 psia, 99% quality steam per hour. A gross generated output of about 140 Kw should be produced. The various pumps, etc. have been estimated to require about 20 Kw, leaving a net switchboard output of about 120 Kw, for an overall thermal efficiency of approximately 12%.

Steam drives for HRE auxiliary equipment were not given serious consideration because of the inefficiency of the small sizes and the desirability of having oil-free boiler feedwater. Oil in feed water may reduce heat transfer rates by as much as 100% and promote foaming with subsequent carry over of slugs of water.

B. Power Cycle

The HRE Power System essentially operates on the simplest vapor power cycle. This cycle conceived by Professor W.J.M. Rankine of the University of Glasgow in 1894, is shown on the H-S, T-S and P-V plans in Figure 2.5.1A, and will be seen to be a modification of the Carnot cycle to meet the requirements of real vapors. Compression and expansion lines are shown to follow paths of increasing entropy because of the irreversibility of real processes. Ideally, the Rankine cycle would have these processes follow paths of constant entropy.

A schematic diagram of the Rankine cycle is shown in Figure 2.5.1B. The pressure, temperature, enthalpy, entropy, specific volume and quality of the working fluid for each numbered point in the cycle diagram are given in the tabulation directly below the diagram.

GENERAL CYCLE DATA

1.	Pump Work (Total - Hotwell + Feed)	0.68 Btu/lb.
2.	Turbine Work	-263,000 ft lb or -338 Btu/lb.
3.	Net Work Output	-337 Btu/lb.
4.	Energy Supplied as Heat	1120.22 Btu/lb.
5.	Energy Discarded	-783 Btu/lb.
6.	Steam Ideally Reqd. per HP-HR of Plant Output	7.54 lbs.
7.	Rankine Cycle Efficiency	30.1%
8.	Carnot Cycle Thermal Efficiency	33.3%
9.	Type Efficiency (Ratio of 7/8)	90.4%
10.	Steam Rate (for Turbine Delivering 140 Kw at 3000 lb/hr. (1000 Kw Reactor Operation)	16.2 lbs/HP-HR
11.	Actual Thermal Efficiency	14.2%
12.	Heat Rate	17,920 Btu/HP-HR
13.	Engine Efficiency	47.3%

Dwg. 16213
Unclassified

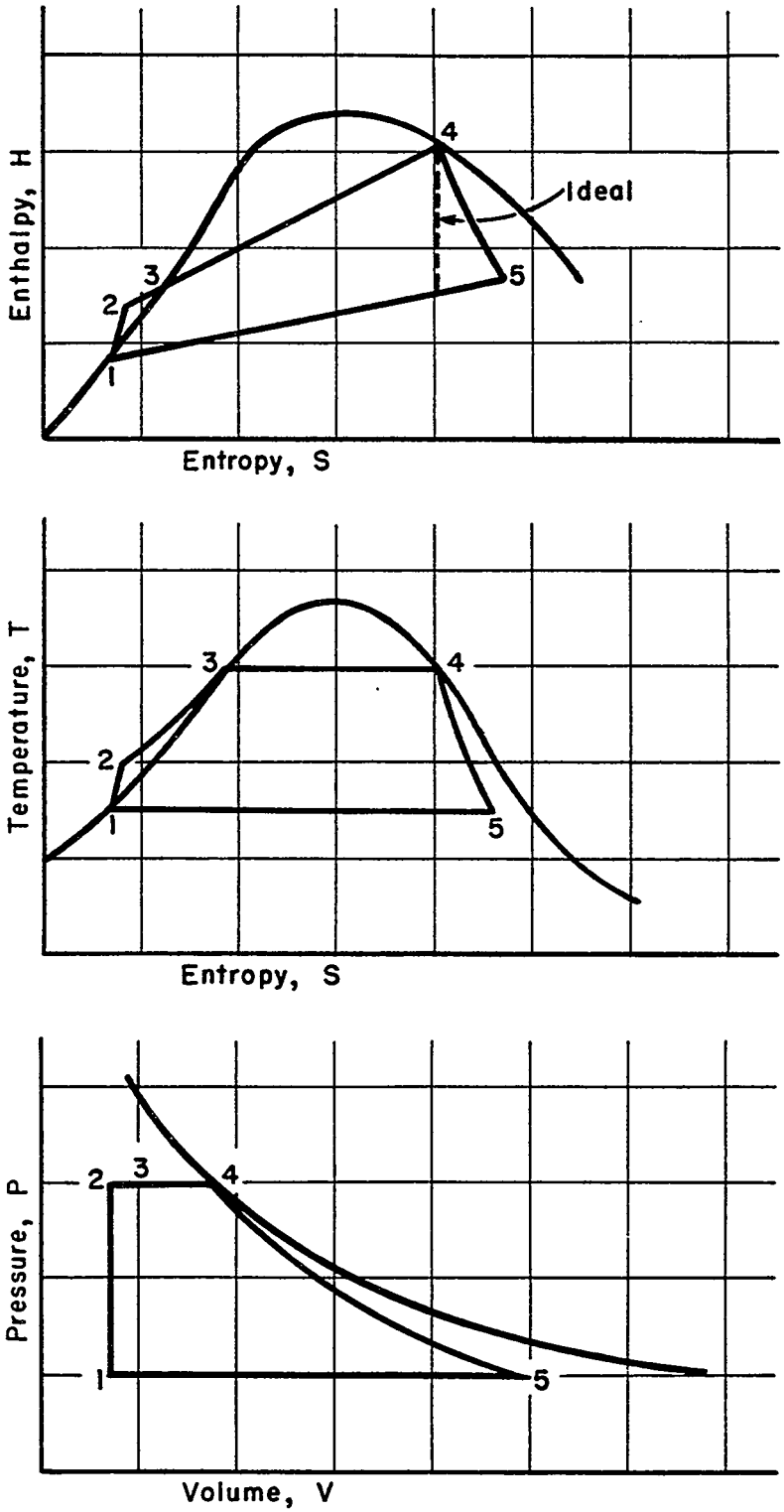

Fig. 2.5.1A. HRE Power Cycle

Dwg. 16214

[redacted]

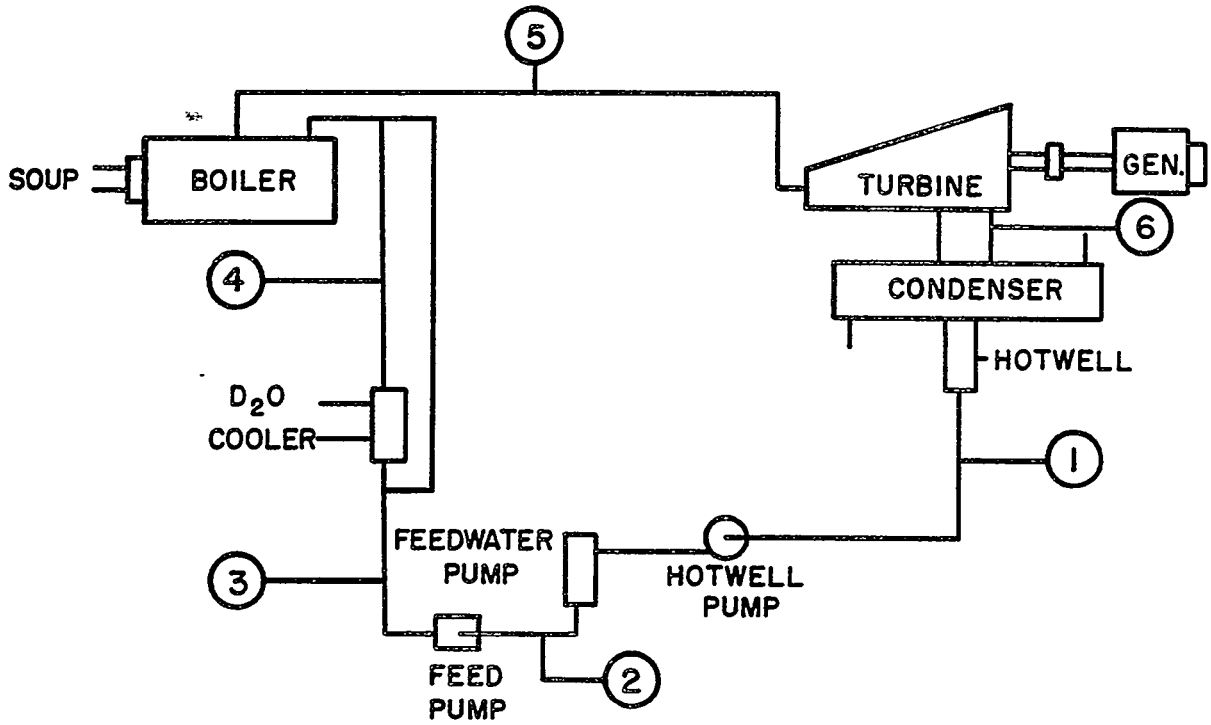

POSITION	PRESSURE PSIA	TEMP. °F	ENTHALPY BTU/LB	ENTROPY BTU/°F, LB.	SPECIFIC VOL. FT.^{3}/LB.	QUALITY %
1	0.982	101.14	69.10	0.1316	0.01614	
2	14.7	101.14	69.14	0.1316	0.01614	
3	220.0	101.14	69.75	0.1316	0.01614	
4	220.0	185.0	152.93	0.2708	0.01614	
5	200.0	381.79	1189.93	1.5353	2.265	99.0
6	0.982	101.14	852.1	1.5353	256.0	75.6

Fig. 2.5.1B. HRE POWER CYCLE—Operation at 1000 KW Power Level

Process 1-2 takes place in the pump, and is one of subcooling in which the pressure is increased to that prevailing in the boiler. Process 2-3 takes place partially in the D_2O cooler (if used) and in the boiler; and represents the constant pressure heating of water to the saturation temperature. Production of steam from water at constant pressure takes place in the boiler, and is represented by process 3-4. A nearly isentropic expansion, represented by 4-5, then occurs in the turbine during which work is performed (electric energy generated). Process 5-1 takes place in the condenser and is a constant pressure rejection of heat. The HRE cycle is a closed cycle since the same working fluid is used over and over again.

C. Normal Operation

Figure 2.5.1C is a flowsheet of the power system, and Figures 2.5.1D and 2.5.1E show the Turbine-Generator condenser layout. Figure 2.1.4A is a layout of the heat exchanger cell.

Beginning at the hotwell, the fluid flow is as follows: Demineralized water from the hotwell at 101°F is pumped by the hotwell pump into the feedwater storage tank which is vented and at atmospheric pressure. This water is then pumped from the tank to the main heat exchanger (boiler) by the feed pump or pumps (a triplex power pump and turbine pump are provided). During normal operation the feedwater passes through the D_2O cooler, where it is heated to approximately 185°F, and then flows to the boiler.

Within the boiler the water is heated and then vaporized at practically constant pressure to form 200 psia saturated steam at a quality of 99%. After passing through a hold-up drum this 200 psia steam is expanded through the turbine which in turn runs the generator and generates electric power.

The expanded steam is then condensed in the condenser which normally operates at a pressure of 0.982 psia.

As the steam condenses the condensate falls to the hotwell and the cycle is complete; the working fluid is now ready to be used in another cycle. Auxiliary equipment, such as the steam drum, steam separator, calorimeter and electric boilers, is discussed in section 2.5.6; the vacuum pump and feed pumps are discussed in sections 2.5.4 and 2.5.5 respectively.

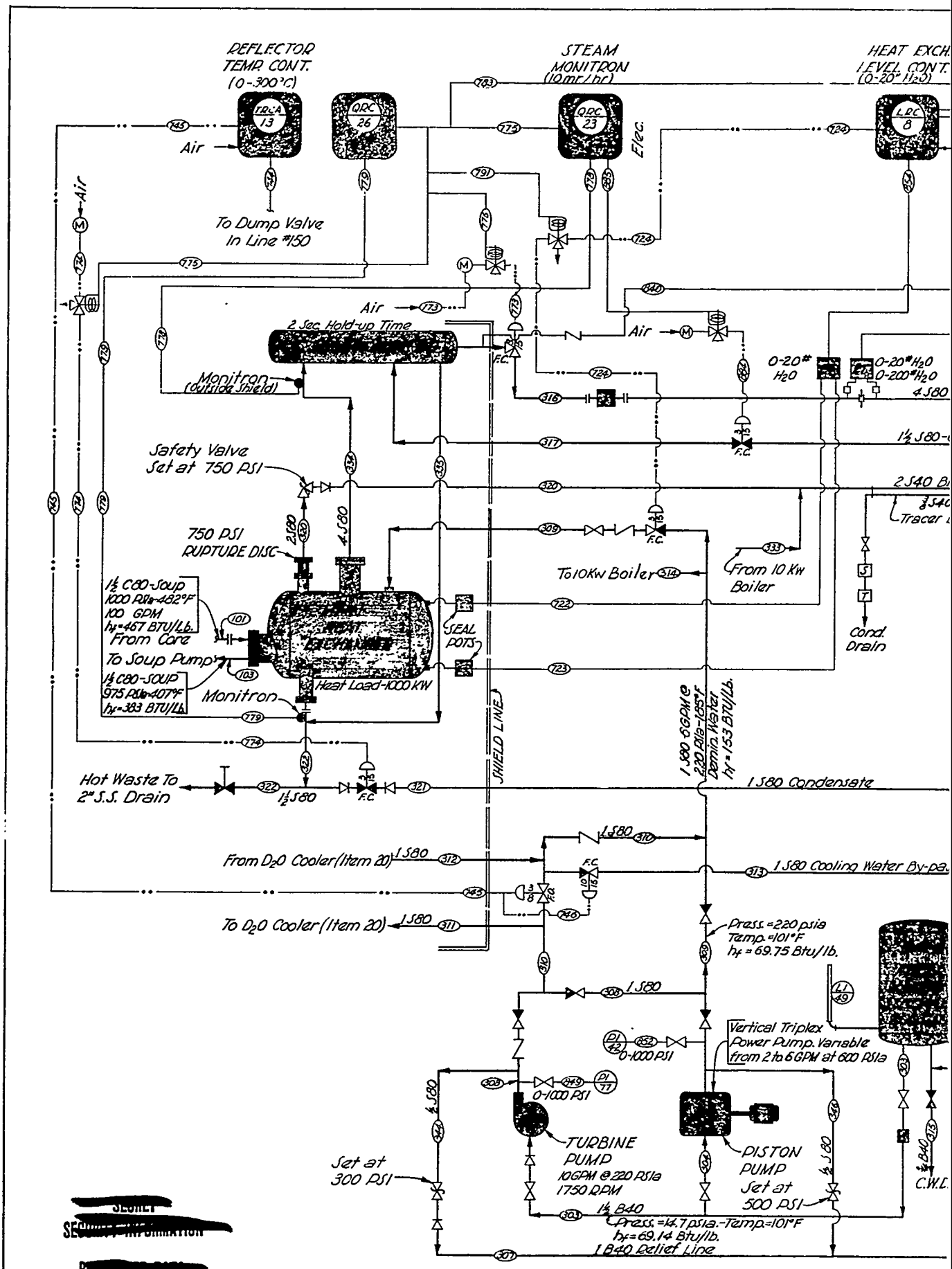

[redacted]

[redacted]

[redacted] contents in any manner to an unauthorized person is prohibited.

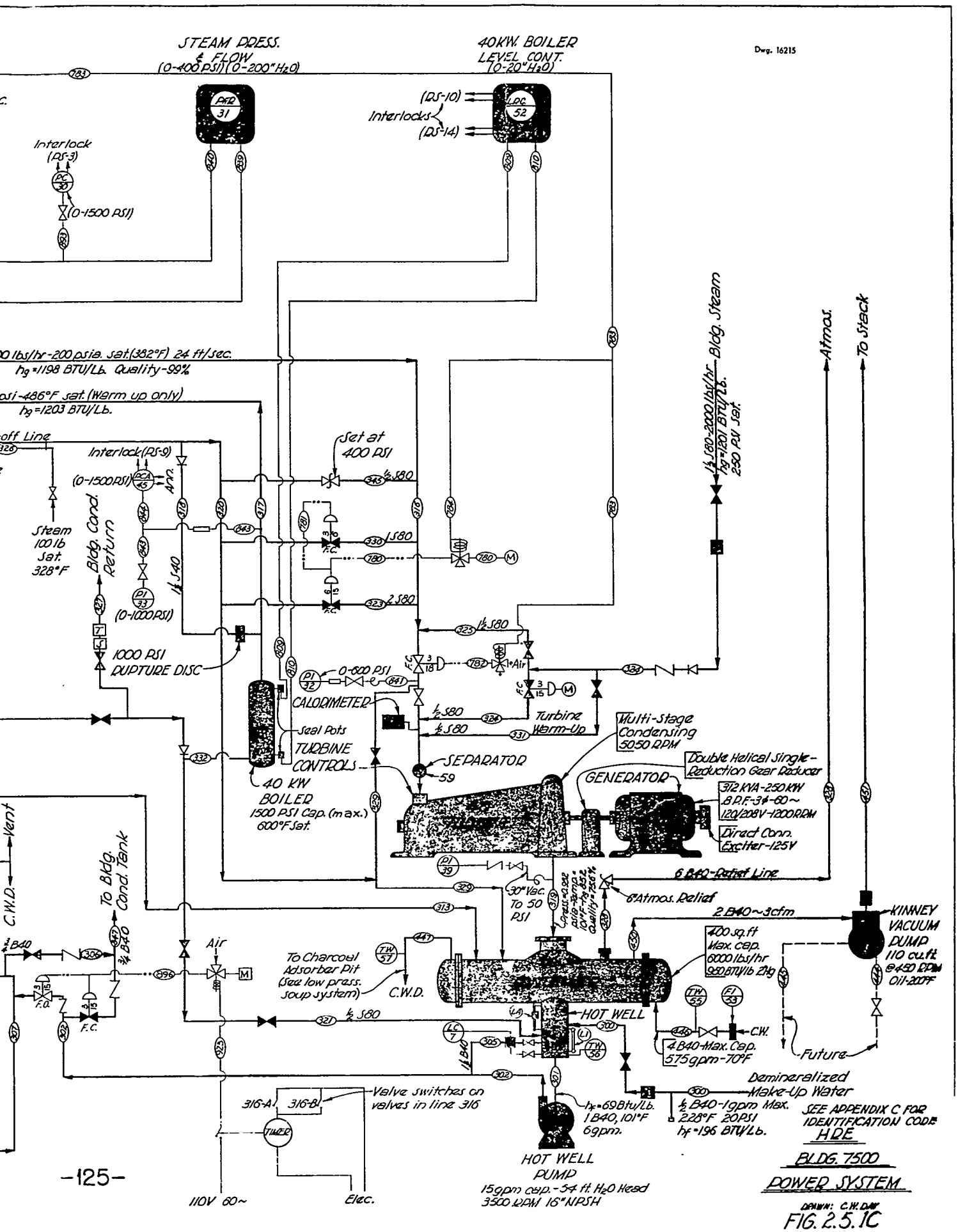
Dwg. 16215
STEAM PRESS. & FLOW (0-400 PSI) (0-200" H2O)
40KW. BOILER LEVEL CONT. (0-20" H2O)
Interlocks (RS-10) (RS-14)
Interlock (RS-3)
(0-1500 PSI)
Bldg. Steam
Atmos.
To Stack
Set at 400 PSI
Interlock (RS-9)
(0-1500 PSI)
Steam 100 lb Sat. 328°F
Bldg. Cond. Return
(0-1000 PSI)
1000 PSI RUPTURE DISC
0-600 PSI
CALORIMETER
Seal Pots
TURBINE CONTROLS
40 KW BOILER 1500 PSI Cap. (max.) 600°F Sat.
Turbine Warm-Up
Multi-Stage Condensing 5050 RPM
SEPARATOR
GENERATOR
Double Helical Single-Reduction Gear Reducer
312 KVA-250 KW .8 P.F.-3φ-60~ 120/208V-1200 RPM
Direct Conn. Exciter-125V
6 B40-Relief Line
30" Vac. To 50 PSI
6" Atmos. Relief
2 B40~3cfm
KINNEY VACUUM PUMP 110 cu.ft. @450 RPM Oil-200°F
400 sq.ft Max. cap. 6000 lbs/hr 950 BTU/lb 2Hg
To Charcoal Adsorber Pit (See low press. soup system)
C.W.D.
HOT WELL
4 B40-Max. Cap. 575 gpm-70°F
Future
Demineralized Make-Up Water
½ B40-1gpm Max. 228°F 20PSI hf=196 BTU/Lb.
hf=69 Btu/Lb. 1 B40, 101°F 6gpm.
HOT WELL PUMP 15gpm cap.-54 ft. H2O Head 3500 RPM 16" NPSH
Valve switches on valves in line 316
316-A
316-B
TIMER
110V 60~
Elec.
Air
To Bldg. Cond. Tank
Vent
C.W.D.
SEE APPENDIX C FOR IDENTIFICATION CODE
HDE
BLDG. 7500
POWER SYSTEM
DRAWN: C.W. DAY

FIG. 2.5.1C

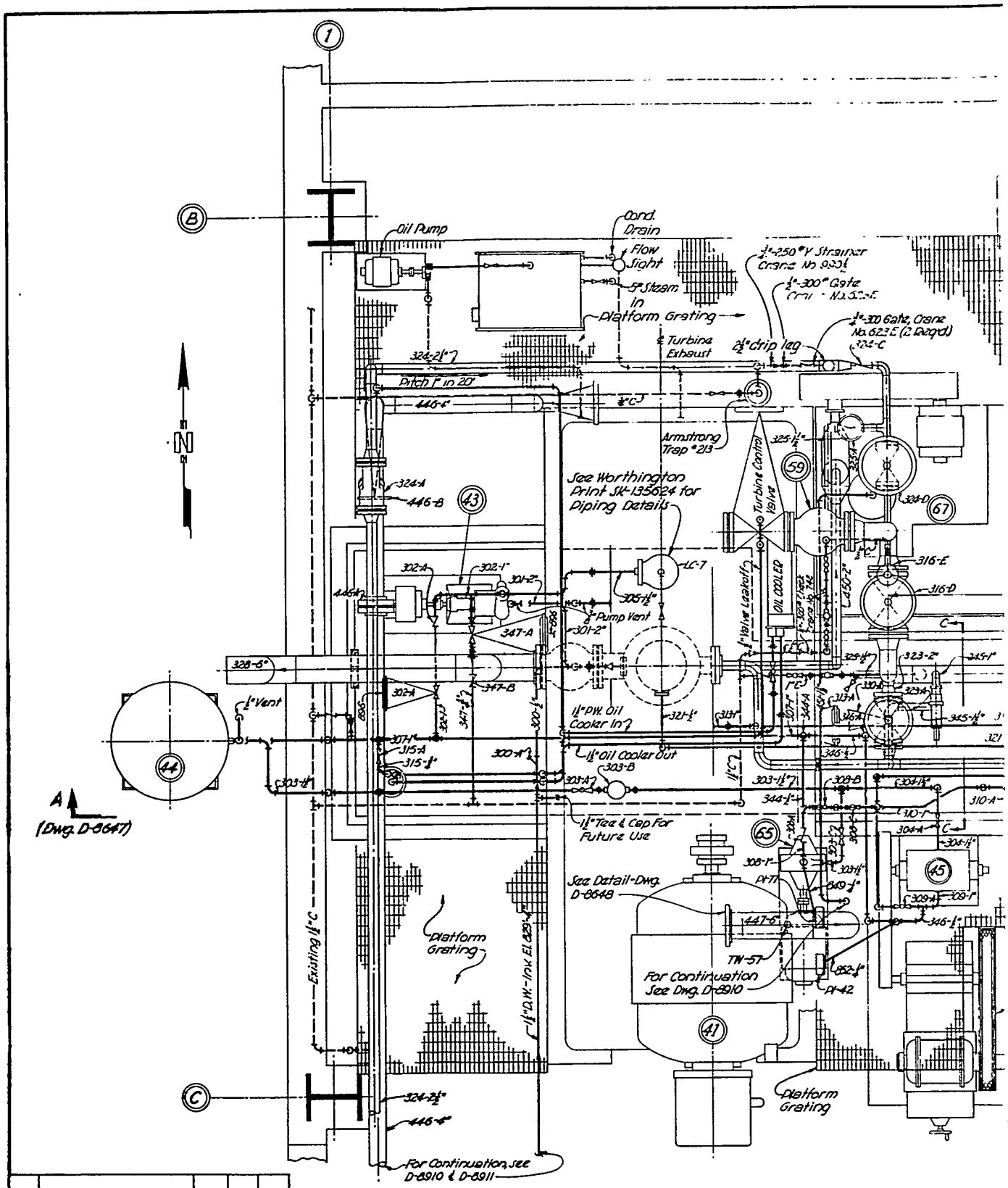

NO.	REVISIONS	DATE	APPR.	APPR.

DRAWING NO. D-8646

DRAWN	DATE	CHECKED	DATE	APPROVED	DATE
E. ONY	9-21-51	R. CAUBLE	10-1-51	F.C.Z.	9-21-51
DESIGNED	DATE	SUBMITTED	DATE	APPROVED	DATE
F.C.E. APP	9-21-51				

HEALTH PHYSICS	MEDICAL	OPERATIONS	SAFETY
[illegible]	RESEARCH SHOP	MAINTENANCE	

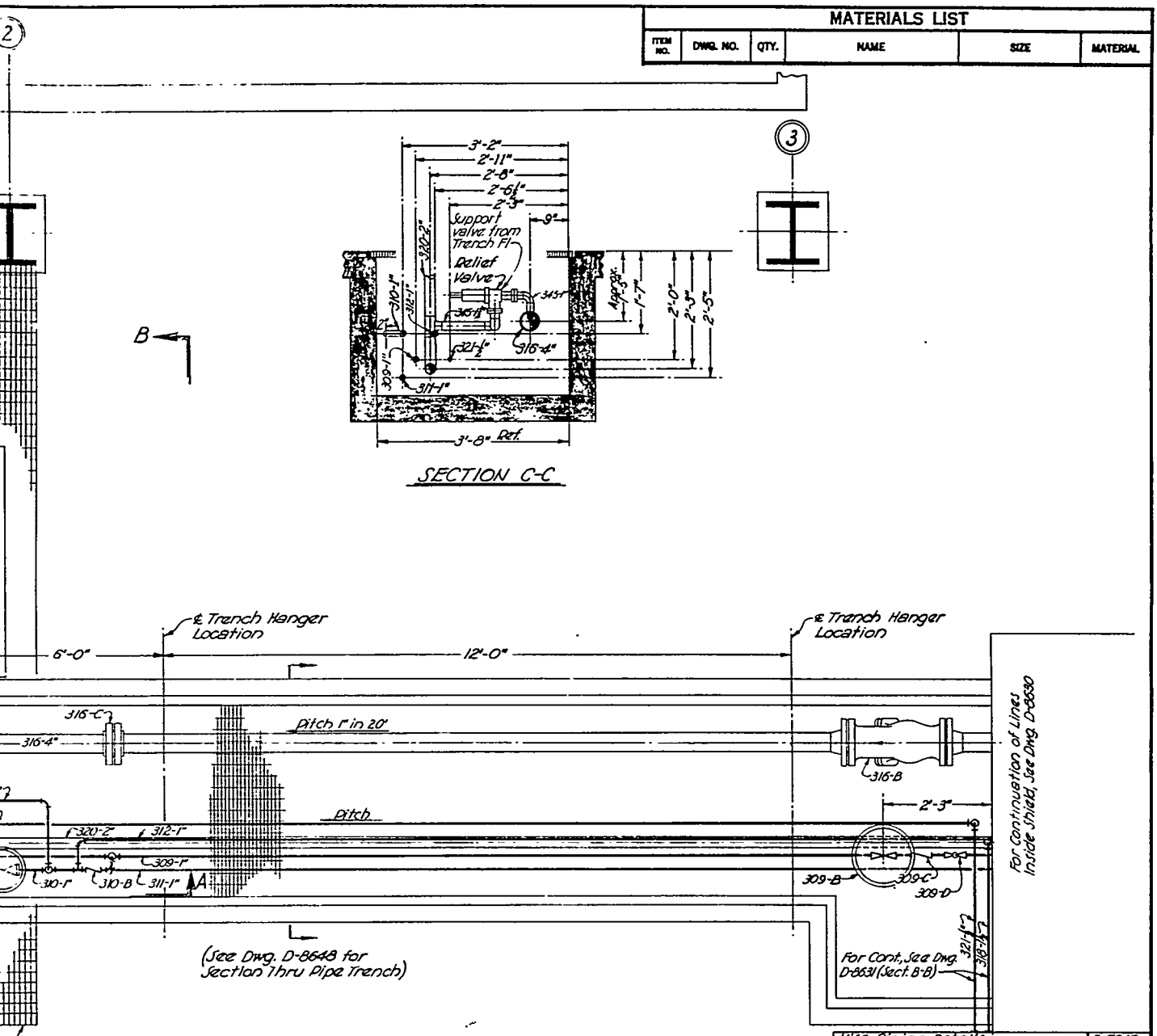

NOTES:

1. Flexatallic gaskets to be used at all flanged joints.
2. Hang all pipe in field, using swing type hangers.
3. Use ½" hanger rods unless otherwise specified.
4. See Insulation Sch. for insulating specifications.
5. Screwed construction may be used for all steam & water lines operating at less than 100 PSI.

REFERENCE DRAWINGS	DWG. NO.
Misc. Piping Details	D-8648
Insulation Schedule	A-10111
Control Valve Schedule	B-10110
Bill of Material	A-10109
Heat Exchanger Cell-Plan & Elev.	D-8630
Platform At Turbine Gen. Foundation	D-9251
Power Plan	D-8922
Underfloor Conduit Plan	D-8921
Service Piping Plan	D-8910
Location Plan & Arrangement	D-8432
Turbine Gen. Foundation-Plan & Dets.	D-8437
250 KW Turbine Gen.-Sections	D-8647

HRE EQUIPMENT BUILDING 7500

250 KW-TURBINE GENERATOR EQUIPMENT & PIPING PLAN

OAK RIDGE NATIONAL LABORATORY
OPERATED BY
CARBIDE AND CARBON CHEMICALS COMPANY
A DIVISION OF UNION CARBIDE AND CARBON CORPORATION
OAK RIDGE, TENNESSEE

THIS DRAWING CLASSIFIED [redacted]
PER [illegible]
SCALE: ¾" = 1'-0"

SUBMITTED | ACCEPTED | APPROVED

M.O. 380628

D-8646

FIG. 2.5.1D

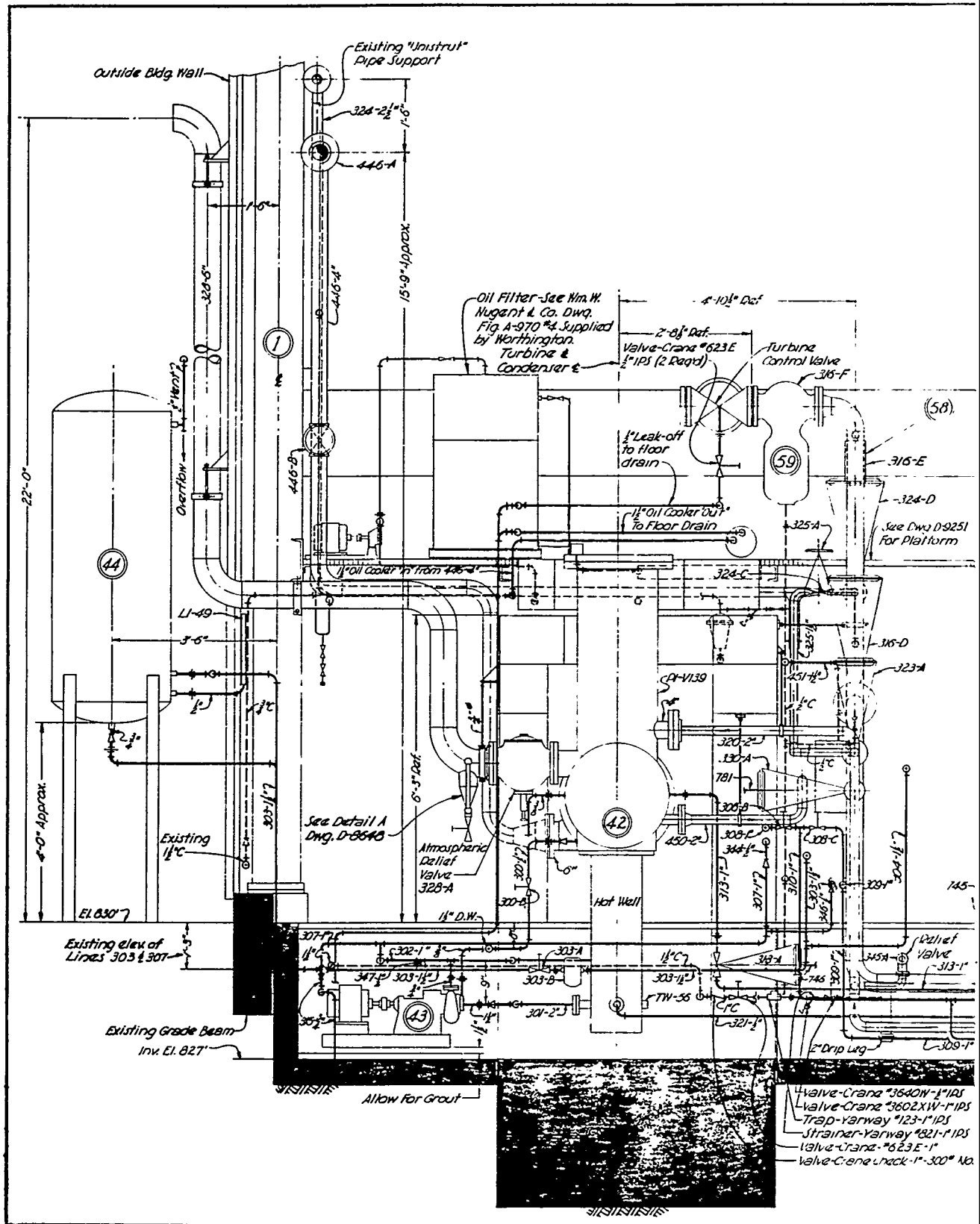

SECTION A-A

NO.	REVISIONS	DATE	APPR.	APPR.

DRAWING NO. D-8647

DRAWN	DATE	CHECKED	DATE	APPROVED	DATE
C. DAY	4-21-51	R. CAUBLE	10-1-51	F.C. [illegible]	9-21-51
DESIGNED	DATE	SUBMITTED	DATE	APPROVED	DATE
F.C. [illegible]	9-21-51				

[illegible]	MEDICAL	OPERATIONS	SAFETY
[illegible]	RESEARCH SHOP	MAINTENANCE	

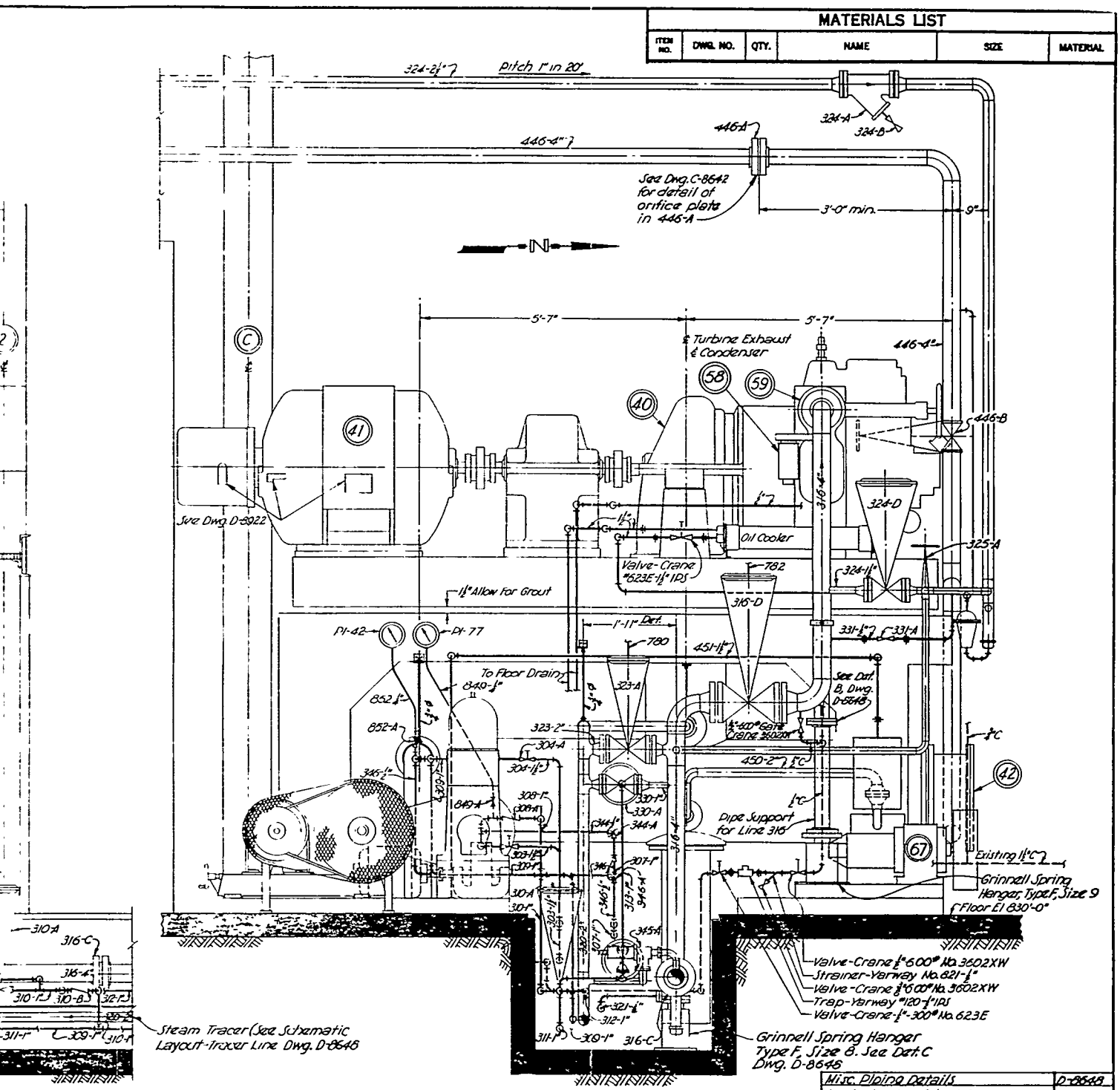

SECTION B-B

MATERIALS LIST					
ITEM NO.	DWG. NO.	QTY.	NAME	SIZE	MATERIAL

REFERENCE DRAWINGS	DWG. NO.
Misc. Piping Details	D-8648
Control Valve Schedule	B-10110
Bill of Material	A-10109
250-KW Turbine Gen.-Eqpt. & Pipe Plan	D-8646

FIG. 2.5.1E

HRE EQUIPMENT BLDG. 7500

250 KW-TURBINE GENERATOR SECTIONS

OAK RIDGE NATIONAL LABORATORY
OPERATED BY
CARBIDE AND CARBON CHEMICALS COMPANY
A DIVISION OF UNION CARBIDE AND CARBON CORPORATION
OAK RIDGE, TENNESSEE

THIS DRAWING CLASSIFIED [redacted]
PER [illegible]
SCALE: ¾" = 1'-0"

SUBMITTED	ACCEPTED	APPROVED
	[illegible]	

W.C. 380636

D-8647

Reactor power output is regulated by controlling the steam temperature and pressure; and this is accomplished either by the turbine governor or by the throttling valves by-passing the turbine. A change of steam demand will produce a corresponding change in soup cooling in the heat exchanger, therefore the soup temperature will drop for an increased steam demand or rise for a decreased demand. This temperature change produces a change of k so the power changes to meet the new demand, and the reactor levels off at the new power and the same average temperature (all other k controls having been fixed).

A suggested start-up and shut-down procedure for the turbine generator set follows:

(Assuming start-up using building steam from building boilers: 6" main from X-10 area can be used.)

1. Check with 7500 building shift supervisor, and inform him of start-up time, run duration, etc.

2. Open condensate drains at turbine platform and boiler steam main; drain water and then close valves.

3. Check with boiler operator and get steam up to pressure at boiler room.

4. Open main steam valve in boiler room and valve No. 324 (from control room) when steam is up to pressure. Trip-throttle valve at turbine should be closed.

5. Start condensate pump (Item 43 control room), keeping valve No. 347 closed. See that cooling water to pump seal is on. If level is too low, open the make-up water supply. It may be necessary to pump a supply of water to the outside feedwater tank (item 44) if the level will not hold. Keep water circulating and hotwell level constant.

6. Check exhaust manometer (P.I. 39) at turbine platform, and zero the mercury column.

7. Start the vacuum pump (item 67 control room), close supply of cooling water to pump, and open valves to bearings only one turn each. Drain off any water in the oil separator as indicated by the sight glass.

8. Open the condenser cooling water valve and set the flow meter reading to about 4. (345 gal/min = 10)

9. See that the oil cooling water valve is closed.

10. Open the trip-throttle valve slowly and start the turbine. (Use auxiliary motor driven oil pump to increase oil pressure.)

11. After a few minutes open the turbine gland seal valves (at turbine platform) and set valves (after a few minutes) to read approximately 1# on gages.

12. Open valve No. 347 (control room).

13. Warm up turbine for approximately 1/2 hr. keeping bearing oil pressure gage at approximately 6 psi.

14. Start oil filter pump and turn on steam to filter.

15. Bring turbine up to speed gradually until governor takes over.

16. Check TVA voltage in the control room.

17. Increase excitation on D.C. Exciter to bring generator voltage to same value as line voltage.

18. See that the D.C. power supply for the circuit breaker is operating. D.C. Voltmeter at lower left side of console-set meter to read 133 v.

19. Turn on the synchroscope.

20. Tie in generator to TVA when synchroscope is in phase with line. (needle in vertical position)

21. Load generator by increasing the governor setting at the console. Items to be checked periodically:

    a. Steam flow to turbine gland seals
    b. Steam flow - recorder at turbine platform
    c. Condensate pump
    d. Vacuum reading
    e. Oil temperature-temperature in control room - 50°C. No. 17
    f. Steam quality - calorimeter
    g. Check steam traps
    h. Boiler condition
    i. Line frequency and voltage
    j. Exhaust steam temp - (No. 24 control room)
    k. Load on generator
    l. Oil filter pump and steam supply
    m. Level in feedwater storage tank
    n. Temperature of in and out condenser water
    o. Cooling water flow rate

Shut-down Procedure

1. Take load off generator.

2. Take generator off of the TVA system.

3. Cut off synchroscope.

4. Stop turbine by closing the trip-throttle valve.

5. Close valves supplying steam to turbine glands.

6. Stop vacuum pump (item 67) (cut off water valves).

7. Stop the hot-well pump (item 43).

8. Close valve No. 347 (will be closed if operating on reactor steam).

9. Stop oil filter pump and cut off steam supply to filter.

10. Close valve No. 324 (will be closed if operating on reactor steam) and close 316 A and B.

11. Cut off condenser water supply.

12. Close main steam valve in the boiler room (will be closed if operating on reactor steam).

13. Keep the auxiliary oil pump running for at least one hour after unit comes to rest.

If it is desired to switch to reactor steam the following procedure may be used.

After performing the first fifteen steps of the start-up procedure the following steps can be taken:

1. Check reactor steam pressure (PFR-31).

2. Keep valve 316B closed and gradually open valve 330 -- check steam flow (PRF-31).

3. Close valve No. 347.

4. Gradually open valve No. 316B -- simultaneously closing valve No. 324.

5. After switch over is complete re-check steam pressure and flow (PRF-31).

6. Then proceed with step 16 of the previous start-up procedure.

D. Instrumentation and Safety Devices

Two monitrons are incorporated in the steam system to indicate excessive activity in the steam line leaving the boiler and in the boiler condensate line which is used as a steam line during warm-up periods. Provision is made to heat the soup system during start-up by introducing building steam into the main heat exchanger. Suitable rupture disks and relief valves are provided to protect equipment from excessive pressures. This house steam may also be useful for flushing and decontamination of the turbine-condenser system if necessary.

These ionization chambers operate shut-off valves which segregate the external (outside of reactor shield) steam system in the event of a leak of pile circulant. To accomplish a quick shut-off, the valves must function within a few seconds. The 4" control valve following the steam drum has a guaranteed closing time of 3 seconds, which should be ample for our application. Feedwater flow to the D_2O cooler is regulated by the reflector temperature controller; and another valve is incorporated in the circuit to provide for additional reflector cooling by by-passing a portion of the reflector-heated stream directly to the turbine condenser.

In general the instruments and controls on the power generation equipment are standard. On the steam side these include the main heat exchanger water level control, steam pressure and flow recorders, remotely operated control valves, level controllers on the electric boilers, steam monitron recorder and controller, throttling calorimeter, and steam condenser cooling water pressure and flow indicators. The electrical instruments include the usual voltmeters, ammeters, kilowattmeters, power factor meter, frequency meter and synchroscope.

Turbine protection is assured by the trip throttle valve which will trip and cut off the steam supply if the turbine overspeeds, the lubricating oil pressure fails, or by emergency release. The turbine condenser is provided with an atmospheric relief valve which will relieve at a pressure slightly above atmospheric to an exhaust line.

E. Radioactivity of Steam

The activity due to both thermal and fast neutrons has been calculated and found to be as follows.

	Thermal	Fast
Activity per cm. of length of 4" main steam line ----------	3.87×10^{-9} curies	3.52×10^{-10} curies
Activity at 2" from pipe surface ----------	17.5 Mev/cm^2 sec.	4.03 Mev/cm^2 sec.
Radiation dosage 2" from pipe ---	3.31×10^{-5} r/hr.	7.63×10^{-6} r/hr.
Laboratory tolerance dosage	1.5 mr/hr.	.75 mr/hr.
Factor of radiological safety	45	[illegible]

The total activity, due to both fast and thermal neutrons, at a distance of 2" from the pipe is 4.073×10^{-5} r/hr. It is therefore concluded that there will be no radiation hazard normally associated with steam produced in the boiler unless there is leakage of the soup solution into the steam system.

F. Main System Pipe Layout

1) Thermal Stress Analysis

S.W. Speilvogels' method (Power, January and February 1941) was used to calculate the forces and moments impressed upon the pipes at thermal equilibrium. Each pipe was assumed to be rigidly enclosed at each end. Individual stresses were obtained by applying flexure theory; and thermal and pressure stresses were combined by the Principle Stress Theory. Figure 2.5.1 F is a schematic drawing of the steam piping which shows the typical stress analysis results. The following tabulation is a summary of the pipe stress calculations and the recommended modifications to reduce abnormally high stresses (several of the lines listed are not in the steam system).

Dwg. 16216

[redacted]

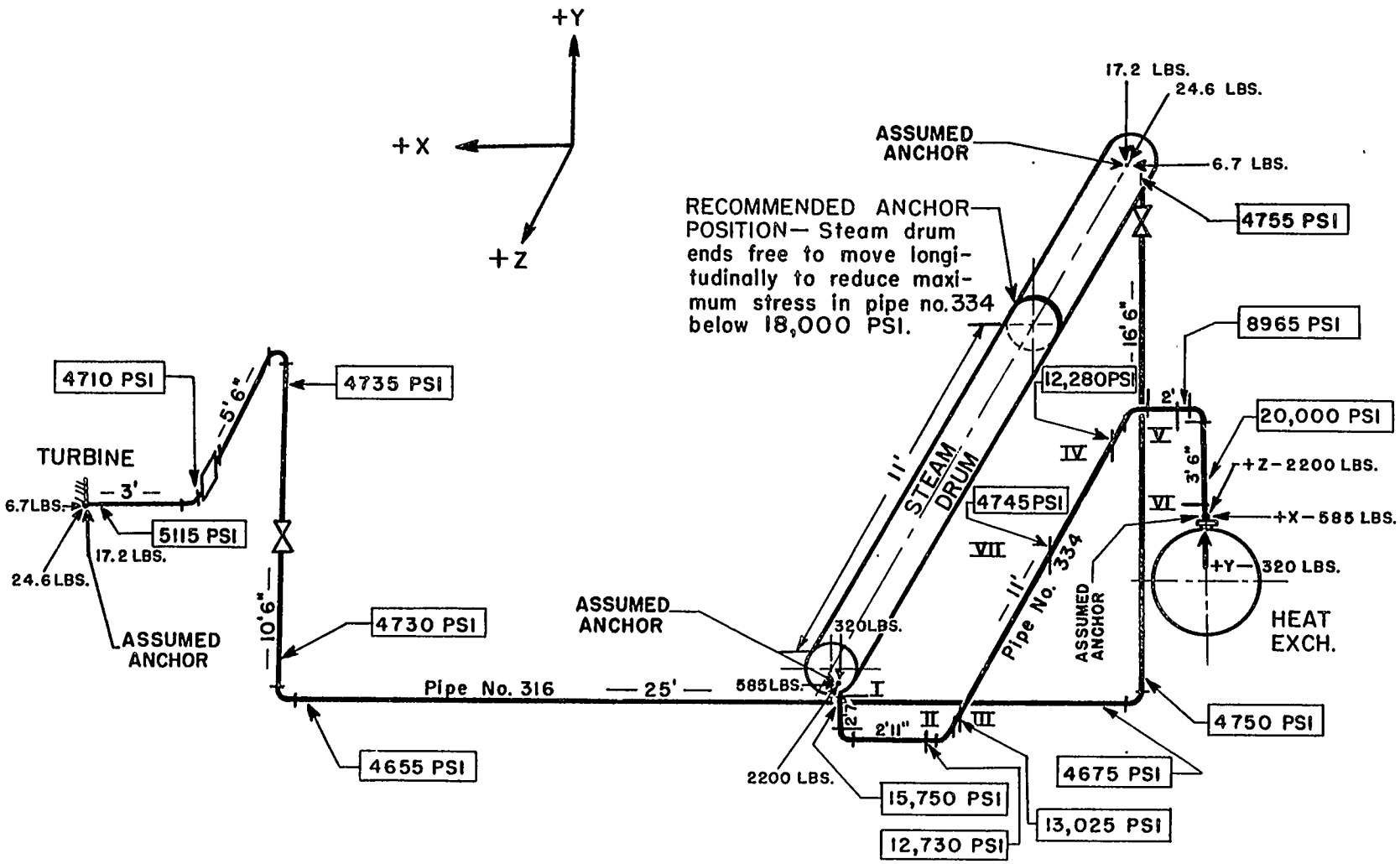

Fig. 2.5.1F. Typical Stress Analysis Results

Line No.	From	To	Max. Combined ± Stress (psi)	Method of Modification to Reduce Stress
101	Reactor Vessel	Soup Heat Exch.	15,400	
102	100 A Pump	Refl. Vessel 10" Thick Flange	12,300	
103	Soup Heat Exch.	100 A Pump	110,000	Stress reduced to safe value by mod. of pump foundation
150	Refl. Vessel	Dump Valve	10,700	
152	Dump Valve	30 A Pump	84,000	Stress reduced to safe value by adding an expansion loop
154	Reflector Cooler	Pressurizer	9,740	
316	Steam Drum	Turbine	5,100	
334	Heat Exch.	Steam Drum	20,000*	Stress reduced to safe value by anchoring steam drum as shown, Figure 2.5.1F.
426	10 Kw Steam Gen.	Pressurizer	9,000	

± Stress due to longitudinal pressure, circumferential pressure and thermal expansion, all combined by the Principal Stress Theory.

* Maximum allowable combined stress for A-106 Grade B pipe at 650°F = (3/4) (12,000 + 12,000) = 18,000 psi.
See ASA Code for Pressure Piping, Paragraph 620-g)

2) Hanging and Anchoring Pipe

Ten steps were used in selecting the proper pipe hangers and anchors.

1. An isometric sketch was made.
2. Hangers were located on the sketch.
3. Building steel and flooring was studied.
4. Hanger loads were calculated.
5. The shape of the hot line was drawn.
6. Flange movement was calculated.
7. Pipe movement was computed.
8. Movement at hanger was found.
9. Hangers were chosen.
10. Rod diameters etc., were selected.

Figure 2.5.1G is an isometric sketch of the main steam piping showing the deflections, hanger, supports etc. It was undesirable to hang the piping from the building structure, and therefore variable spring hangers of the Grinnell Company type F were used. The main steam line run is below floor level, and therefore spring cushion hangers (with pipe rolls and protection saddle) supported from the pit walls were recommended.

An attempt was made to limit all deflections to a value corresponding to a maximum stress of 14000 psi at any point. Moments were calculated to determine the optimum location of the supports and their respective loadings. The dead load of each pipe included the weight of the pipe filled with water and its insulation covering.

2.5.2 Turbine-Generator Set (Items 40 and 41 on E-8628)

PURPOSE:

To convert a portion of available heat energy of the steam generated in the main heat exchanger into useful electrical power.

DESCRIPTION:

The turbine generator set is a Worthington 250 Kw unit consisting of:

1) A Worthington type S-8, 250 Kw, 5050 RPM straight condensing turbine having one two-row velocity compound stage followed by eight impulse stages.

2) A Worthington type E-4 double helical single reduction gear to reduce the turbine speed of 5050 rpm to the generator speed of 1200 rpm.

3) An Electric Machinery 312 KVA, 250 Kw at 80% power factor, 3 phase, 60 cycle, 120/208 volts, 1200 rpm alternating current generator with a direct connected 5 Kw, 125 volt exciter.

4) Flexible couplings for connecting turbine to gear and gear to generator.

5) A structural steel base plate on which the entire turbine-generator set is mounted.

Dwg. 16217
Unclassified

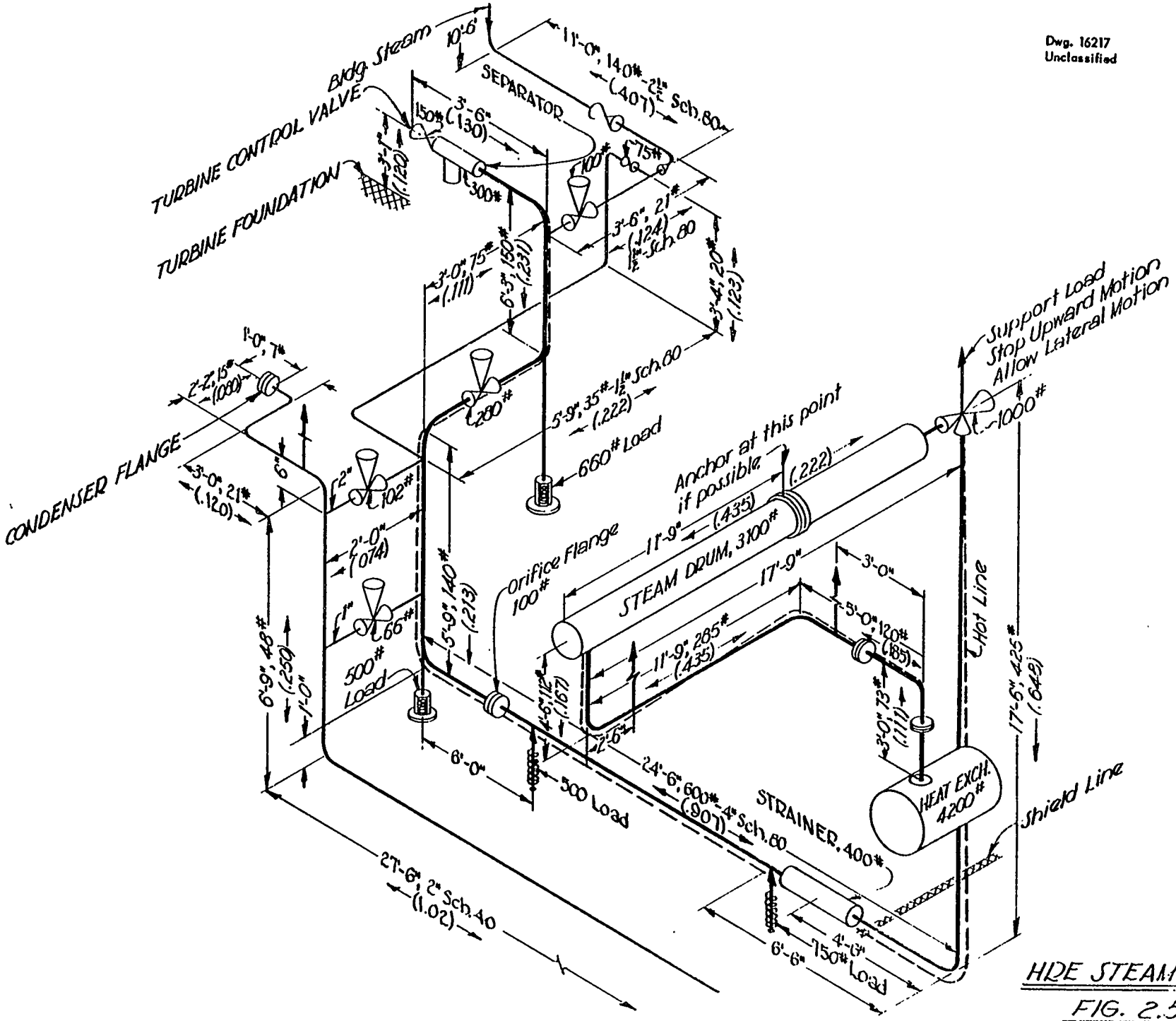

HDE STEAM PIPING

FIG. 2.5.16

The following equipment and accessories were furnished with the turbine-generator unit:

1. A constant speed oil relay governor control consisting of:

   a) An oil relay valve
   b) A speed responsive governor
   c) A power mechanism

The relay valve consists of two rings, each covering a part in the relay valve bushing. The lower and upper parts of the relay valve bushing are piped to the power mechanism such that pressure from the lower part will act to open the governor valve, whereas pressure from the upper part will act to close the governor valve. Any movements of the relay valve by the governor directs high pressure oil to one side of the power mechanism and opens a drain from the other side. A power mechanism is controlled by the relay valve and is actuated by high pressure oil from the main oil pump. Both the relay valve and governor valves are interconnected with suitable compensating linkage so that the relay valve is returned to neutral position after each movement of the governor valve. Without this arrangement the governor would hunt.

This unit is equipped with automatic nozzle control. On this type of control the power mechanism is an oil cylinder mounted on the bearing case, and the oil cylinder rotates a cam shaft by means of a rack on the oil cylinder stem and a gear on the cam shaft.

A Woodward governor, type UG 8, with synchronizing motor (to provide remote speed control) is provided. The governor consists basically of flyballs, a governor spring, a servomotor, a steady state speed droop device, and the necessary compensating device. An oil pump, oil sump, and pressure oil accumulators are built into the governor so that it is self contained.

This governor is the mechanical type, using a hydraulic servomotor for amplifying the power of the governor. A secondary servomotor is used to control the governor valves regulating the flow of steam to the turbine, thereby controlling the turbine speed. We thus have a mechanical governor with two servomotors in series.

The governor is normally isochronous (will maintain same turbine speed regardless of turbine load), but has incorporated a device by which it can be automatically operated with a steady state speed droop which is variable by adjustment. There is also a compensating device which removes transient speed droop during load changes.

A synchronizer, or speed adjusting control is used to change the turbine speed when running alone or to change the load when the turbine is paralleled with other units. The speed droop control can be set to automatically divide or balance load between turbines driving the same shaft, or paralleled in an electrical system; and the load limit control hydraulically limits the load that can be put on the turbine by restricting the angular terminal shaft rotation of the governor, and consequently, the quantity of steam supplied to the turbine. This control may also be used for shutting down the turbine by turning it to zero.

A compensating device consists of a spring centered combination hydraulic and mechanical mechanism which arrests and stops the motion of the governor valves on load change, and permits the repositioning of the governor flyballs to their normal position without appreciable further motion of the governor valves.

2. An emergency overspeed governor is located on the turbine shaft, and is set to trip at a definite overspeed (5600 rpm for this turbine). When the tripping speed is reached, the overspeed weight hits the trip lever and releases the trip relay valve. When released, the trip relay valve is forced up by a compression spring. This movement of the trip relay valve directs high pressure oil to the power mechanism to close the governor valves, thereby shutting off steam to the turbine.

3. An oil operated trip and throttle valve is supplied. This valve has two separate and distinct functions to perform. One of these is to control, by throttling, the steam admitted to the turbine when bringing it up to speed. The other is to act as a quick closing emergency valve. The valve is fitted with an oil trip cylinder which closes the valve when the oil pressure is released or drops below the minimum pressure required for governor valve control. A hand operated trip lever is also provided.

4. A Keiley and Mueller 4" steam strainer to trap foreign material.

5. A Frahm vibrating type tachometer to indicate approximate turbine speed.

6. A Deming #0 hand operated auxiliary oil pump (later converted to motor driven).

7. Gauges and a gauge board consisting of five gauges for measuring:

   a) Inlet steam pressure
   b) First stage steam pressure
   c) Exhaust pressure
   d) Governor oil pressure
   e) Bearing oil pressure

8. Hand operated generator and exciter field rheostats were furnished.

9. A 4" steam inlet opening, and a 20" exhaust opening were provided.

10. A Nugent gravity type oil filter which removes water by the use of a steam coil and filters the oil through a series of filter bags.

11. An oil cooler is furnished. This unit is a standard Ross heat exchanger - Type BCF-603, and a 1-1/2" Cuno Auto-Klean filter, which uses the principle of edge filtration, is used in line with the cooler.

12. A field discharge resistor is also furnished.

BASIS OF DESIGN

Since the majority of the equipment is of standard commercial design, only the turbine will be discussed in this section.

The steam supplied to the turbine will be of variable pressure and flow rate as shown in Figure 2.5.2A. These steam conditions were arrived at by assuming the rated temperature for reactor operation, and using a calculated heat transfer coefficient for the main heat exchanger to arrive at the probable steam pressure. A nominal design point of 200 psi, and 3,030 lbs/hr was chosen; however, the unit was designed to cover the spread of pressures and flow rates as given in the table below and as shown in Figure 2.5.2A.

Steam pressure	65# abs.	115# abs.	200# abs.	250# abs.	290# abs.
Steam flow #/hr	6000	4500	3000	2100	1200
Steam rate #/Kw-hr	21.42	20.00	21.42	25.30	60.00
Kw load	280	225	140	83	20
Power factor	.893	.8	.8	.8	.8

Note that no power can be developed from the 360# abs. or the 315# abs. pressure condition as the flow is too small.

Steam quality is assumed to be 99% for all pressures, and the exhaust pressure for turbine is 2" Hg. abs.

Dwg. 16218

[redacted]

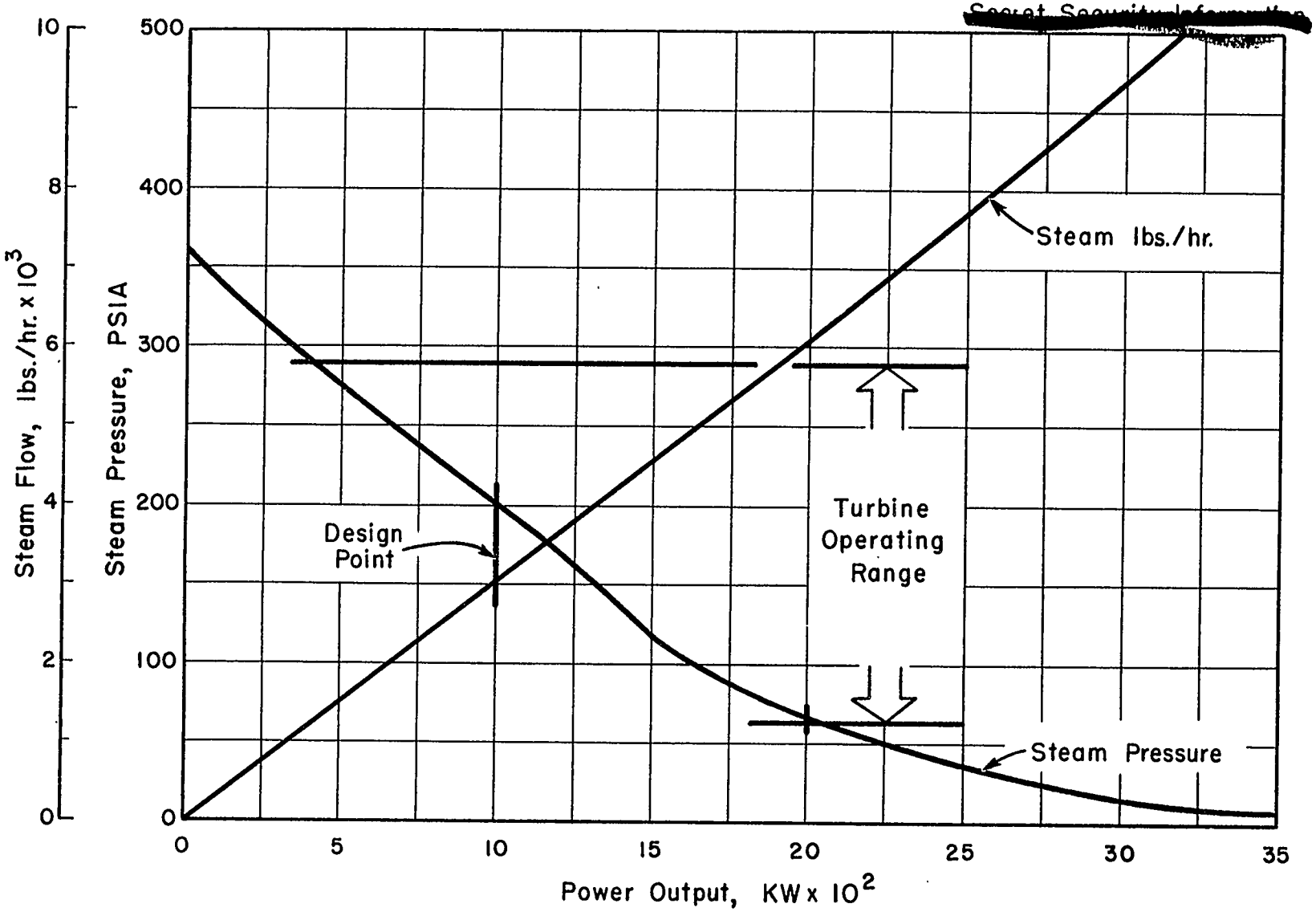

Fig. 2.5.2A. HRE Steam Pressure and Flow vs. Operating Power.

TABLE 2.5.2A

HRE Turbine
Power Pressure Test

Thro. Pres. psia	Pressure Under Gov. Valves (In valve opening order) #3 psia	#2 psia	#4 psia	#5 psia	#1 psia	1st Stage Pressure psia	Mfgr. "Calc." kw	Generator Obs. kw	Calc. kva	Volts	Avg. Amps.	Exciter Volts	Amps.	Calc. kw	Gen. Field Calc. ohms	Thro. Calc. Temp. °F	Calc. Superheat °F
65	60	9.3	3.6	3.9	3.9	4.1	-	-	-	-	-	-	-	-	-	320	50
65	61	59	4.4	5.4	5.6	6.6	20.2	21.6	20.7	68	176	19	3.5	0.067	5.42	321	50
65	62	61	61	15	15	15	110	118	116	160	419	45	9.3	0.42	4.84	320	50
65	59	60	60	62	22.5	22.5	206	215	215	212	585	69	14.7	1.02	4.7	360	80
65	59	60	59	62	59	32	290	311	307	224	790	87	17.9	1.56	4.85	333	55
290	270	13	11	11.5	11.5	12.7	x	105.4	103	129	460	41.5	8.2	0.34	5.06	325	5
290	284	269	23.5	24.2	24.2	24.5	x	279	277	208	769	78	16.0	1.25	4.87	370	33

RPM - 5050/1200

Exhaust Pressure - 2" Hg Abs.

Additional Data Recorded During Test

1.	Critical speed not noticeable	
2.	Emergency trips at	5600 RPM
3.	Max over speed after tripping	5680
4.	Governor oil pressure	65#
5.	Bearing oil pressure	9#
6.	Low oil trip operates at	3-1/2#
7.	Low oil trip resets at	7#
8.	Trip throttle valve trips at	23#
9.	Speed change - Max.	5400
	Min.	1975
10.	Sound level at full load	91 D.B.
11.	Vibration at no load:	
	St. end brg.	.00075
	Exch. end brg.	.0005
	Gen. inb'd brg.	.00025
	Gen. outb'd brg.	.00025
	Exciter inb'd	.00025
	Exciter out'd	.00025
	Gear outb'd	.00025
	Gear outb'd	.0005

If reactor steam pressure falls out of the turbine-generator range, as shown in Figure 2.5.2A, the turbine should be by-passed and the steam "killed" by piping it directly to the turbine condenser.

A power-pressure test was conducted at the Worthington plant to confirm the guaranteed steam rates as given in the above table. This test consisted of the following five steps:

1. Calculate the nozzle areas (other than first-stage) for maximum efficiency.

2. Choose the first-stage nozzle to meet the guaranteed load points.

3. Determine the amount of power out of each nozzle group by calculation.

4. Test turbine with maximum steam possible through each group ("group" implies several openings in one nozzle).

5. Compare power obtained from 3 and 4, and if the test power is equal to or greater than the calculated power, the turbine is expected to meet the guaranteed performance.

Table 2.5.2A is a tabulation of the test data which indicates that the observed test Kw exceeded the calculated Kw, and therefore the turbine would exceed the guaranteed performance.

The factory power-pressure test was not a complete test by any means; however, since additional testing time at the factory was at a premium and costly, it was decided to conduct performance tests after the turbine-generator set was installed in the 7500 building. Tests were conducted by the MIT practice school at pressures of 50, 100, 150, and 200 psi from no load up to the capacity of the building boilers. The results of these tests are given in MIT practice school report EPS-X165, "Performance Tests Turbine-Generator for Building 7500".

Worthington's guaranteed performance ratings could not be checked during the tests because of the limit placed on the maximum flow rate by the small capacity of the building boilers. Checks on the manufacturer's specifications at powers greater than 70 Kw will be carried out after the 6 inch steam line from the X-10 plant to the 7500 building has been installed.

LOCATION:

As shown on drawing D-8432 "Location Plan and Arrangement" the turbine generator set is mounted on a reinforced concrete foundation which is located near the west side of the 7500 building at an elevation of 9 ft-4 in. above floor level (830 ft).

REFERENCES:

Worthington Instruction Book S.O. Number 8571 Turbine No. 16061 Worthington Drawing D-53355 - Form "S" Multistage Steam Turbine Electric Machinery Mfg Company Instruction Books:

1. No. 82a - Direct Connected Exciters
2. No. 62 - Horizontal Synchronous Generators

Electric Machinery Company Information Sheet for Generator and Exciter (Sale No. D-1149)

Electric Machinery Company Drawings:

A-10773 - Winding Diagram
A-7325 - Connection Diagram
M-6434 - Field Discharge Resistor
B-12067 - Dimension Diagram
Sheet No. A86-260 - Generator Field Rheostat
Sheet No. A86-260 - Exciter Field Rheostat

Located and installed per ORNL drawings:

D-8646 - 250 Kw - Turbine Generator Equipment and Piping Plan
D-8647 - 250 Kw - Turbine Generator Sections
D-8648 - Misc. Piping Details
A-10109 - Bill of Materials
D-8437 - Turbine Gen.Foundation - Plan and Details
D-8632 - Location Plan and Arrangement
D-9251 - Platform at Turbine-Generator Foundation
A-10111 - Insulation Schedule

2.5.3 Turbine Steam Condenser (Items 42 and 43 on E-8623)

PURPOSE:

To provide a vacuum at the turbine exhaust end, and to condense the steam discharged from the turbine for feed water use.

DESCRIPTION:

The condenser is a Worthington multi-pass type, single bank, balanced flow, deaerating, 3 pass, surface unit with an air cooler section and hotwell. Other features are the arrangement of the hotwell for liquid level control of the hotwell pump, and the hanging of the condenser from the turbine exhaust nozzle. A tabulation of the physical data of a) the condenser, b) the hotwell pump, and c) the exhaust relief valve follows:

A. Condenser:

1.	Minimum amount of effective tube surface	400 ft^2
2.	Tube length between tube sheets	10 ft-0"
3.	Size of tubes	5/8" O.D.
4.	Gauge of tubes	18 BWG
5.	Tube material	Admiralty metal
6.	Number of tubes	245
7.	Total length of tubes	122"
8.	Tubes are rolled and flared in tube plate at inlet, and rolled in the tube plate at the outlet	
9.	Tube packing	none
10.	Tube head size	26-3/8" dia x 7/8" thick
11.	Tube head material	Muntz metal
12.	Water box flange gaskets - nozzle heads to tube heads - 27" O.D. x 21-5/8" I.D. x 1/16" thick	

13.	Number of support plates	2
14.	Thickness of support plates	1/2"
15.	Water box test pressure	60 psig
16.	Shell material	3/8" thick welded steel plate
17.	Water box material	Cast Iron
18.	Hotwell material	Steel
19.	4" NPS inlet opening for direct steam line connection (by-pass turbine)	
20.	Steam inlet size	2"
21.	Weights, approximate:	
	One condenser tube	3.5 lbs
	Condenser dry	5000 lbs
	Condenser in service	5700 lbs
	Condenser all flooded	7600 lbs
	One nozzle head inlet	200 lbs
	One nozzle head outlet	300 lbs
	One flat head	200 lbs

B. Hotwell Pump:

Type - Worthington 3/4-CNH-52 volute pump
Motor drive - 3/4 H.P., 3 phase, 60 cycle, 220/440 volt, 3600 RPM, squirrel cage motor. Frame #65.
Pump - Motor connection - flexible coupling
Pump and motor are aligned and mounted on common base plate.
The hotwell is provided with a Sarco liquid level controller.

C. Exhaust Relief Valve:

Type - Worthington horizontal automatic atmospheric relief
Size - 6"
Uses a water seal, and has a piston type movement which can be activated manually.

BASIS OF DESIGN:

a. Condenser

1.	Steam condensed	6000 lbs/hr.
2.	Absolute pressure at condenser	2" Hg.
3.	Circulating water	575 US GPM
4.	Heat removed	950 Btu/lb
5.	Inlet water temperature	70°F
6.	Cleanliness factor	100%
7.	Friction loss through condenser on basis of new clean tubes (at 575 GPM)	38.5 ft water
8.	Water velocity through tubes	10.35 ft/sec
9.	Water source	Filtered City Water
10.	Heat transfer coefficient	731 Btu/hr-ft^2-°F Log.MTD.
11.	Water supply pressure at regulating valve	max. 52 psia min. 45 psia

12.	Total heat load (approx.)	6×10^6 Btu/hr
13.	Air removal	vacuum pump
14.	Oxygen content of condensate to be less than 0.03cc/L @"zero" hot well depression	
15.	Air suction depression, 7.5° FMM, 10 to 15°F desirable	
16.	General features and design to be similar to standards of the Heat Exchange Institute.	

b. Hotwell pump:

1.	Maximum rated capacity	15 gpm
2.	Total dynamic head in feet	80
3.	Speed in RPM	3500
4.	Net positive suction head	18"
5.	To handle water at temp. of	100-200°F
6.	Pressure-suction	2" to 4" Hg.
7.	Control	float at condenser hotwell

c. Atmospheric relief valve:

The size of atmospheric relief valves is somewhat dependent upon the local operating conditions. It is always understood that they must be of a size to pass all of the steam which can be admitted to the turbine through any openings, except from lines which are already protected by relief valves set to open at pressures not exceeding 10 psig.

A 6" valve is recommended by the Heat Exchange Institute for adequate protection of a condenser condensing up to 7,500 lbs of steam per hour.

ACCESSIBILITY:

Estimate of the activities and resulting radiation hazards from the condenser hotwell, and the 200 gallon feedwater tank at design conditions were made (1000 Kw power level). The activities may be summarized as follows:

Assuming the hotwell volume to be an equivalent sphere, the computed total radiation on the surface is 0.129 R/8 hr. According to Wende, the maximum upper limit approaches 0.386 R/8 hr. It is probable that the actual radiation will be somewhere between these values. In either case, the estimated radiation is greater than tolerance on the surface of the hotwell, hence, operating personnel should be warned not to approach the immediate vicinity of this equipment until the actual radiation intensity has been verified.

The radiation dosage on the surface of the 200 gallon feedwater tank slightly exceeds tolerance. According to Wende, the activity may approach an upper limit of 0.243 R/8 hr, therefore, personnel should be kept at a distance from the tank until the actual radiation intensity is measured.

The activities were calculated in the following manner:

1. Hotwell

Activity of steam (due to Na, Cu and $_8O^{19}$ - thermal neutron absorption) is approximately 1.5×10^{-6} curies/ft^3

Gamma photons produced 2.76 Mev

Activity of steam (due to $_7N^{16}$ - fast neutron absorption is approximately 1.37×10^7 curies/ft^3

5.48×10^{-3} ft^3 of steam at 200 psi saturated condenses to 1 cm^3 of water; on this basis the total activity of the water in the hotwell is:

18.3×10^{-4} curies from $_8O^{19}$, Na and Cu

16.6×10^{-5} curies from $_7N^{16}$

C.W.J. Wende (The Computation of Radiation Hazards M-1324) specifies that at the wall of a chemical tank which has self absorption, the intensity of radiation approaches an upper limit equal to approximately 12 I_0^*L, where I_0^* is the intensity at 1 cm. from the activity contained in 1 cm^3 of solution and L is the mean free path of the radiation in the solution. Radiation intensity used here is in Roentgens per 8 hr. The intensity at 1 cm. from a point source of C curies of energy E Mev. per photon ($N = 3.7 \times 10^{10} \times C$) = $4.4\ CE \times 10^4$, R/8 hr.

Using this rule, the intensity of radiation on the surface of the hotwell is:

0.276 R/8 hr from $_8O^{19}$, Na, and Cu

0.1100 R/8 hr from $_7N^{16}$

Total 0.386 R/8 hr

The calculations were checked assuming the hotwell as an equivalent sphere with the following results:

	0.102 R/8 hr from $_8O^{19}$, Na, and Cu
	0.0270 R/8 hr from $_7N^{16}$
Total	0.1290 R/8 hr

2. Feedwater storage tank

Assuming the tank to be spherical, unshielded, and considering self-absorption, the intensity of radiation at the surface is:

$$I = \int_0^{2R} \int_0^{\cos^{-1}} \frac{r}{2\ R} I_o^* \frac{e^{-ur}}{r^2} 2 \pi r^2 \sin \theta \, d\theta \, dr$$

and

$$I = \frac{\pi I_o^*}{u^2 R} \left[2 uR + e^{-2 u R} - 1 \right]$$

where

I = Radiation intensity at surfaces of sphere in Roentgens/8 hr.
I_o^* = Radiation intensity at unit distance from unit volume.
u = Absorption coefficient (cm^{-1})
R = Radius of sphere, cm.

Water hold-up time in the condenser hotwell at 1000 Kw power level is approximately 570 sec. It may be reasonably assumed that the activity in the condensate leaving the hotwell due to the $_8O^{19}$ and $_7N^{16}$ atoms present will have decayed to negligible amounts in this time element. ($_8O^{19}$ has a half-life of 27 sec. and $_7N^{16}$ a half-life of 7.35 sec.). The residual activity is assumed to be due to the sodium and copper present from the demineralizer. This activity is estimated to be 7.23×10^{-9} curies per cm^3.

Using the same formula as in the previous section $I_o = 4.4$ CE $\times 10^4$; $I_o = 0.88 \times 10^{-3}$ R/8 hr where I_o is equal to intensity at unit distance from unit volume. The

radiation intensity on the surface of the tank as given by

$$I = \frac{\pi I_o}{2 R} \left[2\mu R + e^{-2\mu R} - 1 \right] \text{ is } 0.104 \text{ R/8 hr.}$$

According to Wende the activity may approach an upper limit defined as $I_{(max)} = 12 I_o L$ which becomes 0.243 R/8 hr.

LOCATION:

The condenser is hung directly from the exhaust flange of the turbine. As shown on D-8647 the lower portion of the hotwell is located in a pit below building floor level, and the condensate or hotwell pump is mounted near the north west corner of the pit.

REFERENCES:

Worthington General Instructions for operation and maintenance of Steam Surface Condensers and Auxiliaries number W-200-E3 Serial number 1395854.

Worthington drawing DY-102700-400 Sq. ft - Surface Condenser - Elevation.

Worthington Type CNH-Group 2 Volute Pumps - Dwg. SK-119283 and Bulletin W-305-EIC.

Worthington Dwg. SK-135624-Sarco Liquid Level Controller.

Worthington Dwg. DR-97060 - Horizontal Auto. Exhaust Relief Valve.

Located and installed as per drawings:

D-8646 - 250 Kw Turbine Generator Equipment and Piping Plan.
D-8647 - 250 Kw Turbine - Gen. Sections.
D-8648 - Misc. Piping Details
D-8432 - Location Plan and Arrangement.

2.5.4 Non-Condensible Gas Pump (Item 67 on E-8623)

PURPOSE:

To remove the air and non-condensable gases from the steam condenser (Item 42).

DESCRIPTION:

A Kinney Manufacturing Company Model DVD 8810 vacuum pump with a 5 H.P., 3 phase, 60 cycle, 1800 RPM, motor drive has been installed.

BASIS OF DESIGN:

A certain amount of air unavoidably enters every condenser system from turbine glands, drains, heater vents, gasket leaks, and the like. Amount of leakage has little to do with the size of the condenser, some small condensers having 10 to 15 cfm leakage and some of the largest as low as 2 or 3 cfm. Air removal equipment is designed to handle much more than expected leakage for starting up and contingencies.

Steam jet vacuum pumps are widely used in steam power installations because the exhaust may be used for feedwater heating and the system is not contaminated by oil. These units are very inefficient as pumps, however, and were not considered for the HRE because of the large steam demand. The discharge from the mechanical vacuum pump is contaminated by oil and therefore no attempt is made to recover the water.

The Heat Exchanger Institute recommends that the capacity of air removal equipment should not be less than 2.20 cfm (70°F free dry air leakage) for surface condensers (serving turbines) which are condensing a maximum of 5000 pounds per hour. This value is greater, however, than the maximum air leakage expected with a normally tight system.

Kinney's model DVD-8810 vacuum pump is rated as follows:

Displacement per 100 RPM	24.5 ft^3
Normal RPM of pump	450 RPM
Theoret. displacement per min. at normal RPM	110.30 ft^3

The condenser operates normally at 2" HG (50 mm Hg) or approximately 1 psia. At this pressure, the pumping speed is approximately 90 cfm, and the power input per cfm pump

displacement is .0385 H.P. At this rate the H.P. input for 90 cfm is 3.5 H.P.

Pumping speed required for a gas flow of 2.20 cfm is 41.8 cfm (equivalent pumping speed). Therefore, we have a safety factor of 90/41.8 or 2.15. The pumping effectiveness of any mechanical vacuum pump is reduced by the presence of excessive amounts of condensable vapors such as water or hydrocarbons, however, operation at a pressure of 50 mm Hg. should not be greatly effected. This particular pump was used since it was available as surplus equipment in the Y-12 Area and it had the required capacity for our system.

The pump and motor are mounted on a common base plate, and the pump is equipped with an oil separator designed to separate the oil and water from the exhaust gases of the pump discharge.

LOCATION:

As shown on drawing D-8646 the vacuum pump is mounted at floor level adjacent to the north east corner of the turbine generator platform.

REFERENCES:

Kinney Bulletin No. V51 - Kinney High Vacuum Pumps

Kinney Bulletin on Directions for Setting up and Operating Type DVD High Vacuum Pumps

Kinney Mfg. Company drawing number 11107, Sheet Number 26 Outline drawing of DVD Vacuum pump.

Installed and located per ORNL drawings:

D-8646 - 250 Kw Turbine - Gen.Equipment and Piping Plan
D-8647 - 250 Kw Turbine - Gen. - Sections

2.5.5 Boiler Feed Water Pumps (Items 45 and 65 on E-8623)

PURPOSE:

To provide the main heat exchanger and 10 Kw boiler with feed water for steam generation.

DESCRIPTION:

Two pumps are utilized for feed water service in the HRE. One is a triplex power pump, and the other a two-stage turbine type pump. Each will be taken up individually.

1. Turbine-Type Pump

This pump is a two-stage turbine pump, Model G5T, manufactured by the Aurora Pump Company, Aurora, Illinois. Normal rating of this pump at 1750 rpm is 350 ft head (152 psi) at a capacity of 25 gpm using a 5 H.P. motor drive; however this pump is fitted with a K-monel shaft, and rotary shaft seals which will allow an increase in the maximum differential pressure of the pump to 225 psi. For reactor operation at or below 225 psi (reactor power level of 1000 Kw or above) the turbine pump should be operated, however, at higher pressures (operation below 1000 Kw) the triplex power pump should be used.

The pump is of all iron construction with no brass, bronze or copper alloys in contact with the water being pumped, and both the pump and its motor drive are mounted on a common bed plate. A 5 H.P, 208 volt, 3 phase, 60 cycle, 1750 rpm, splash proof, Louis-Allis Company motor is used to drive the pump.

BASIS OF DESIGN:

Figure 2.5.5A shows the boiler feed water requirements and the head curve for the turbine pump. The pump is a commercial product, and specific design information can be found in bulletins published by the Aurora Pump Company.

LOCATION:

As shown on ORNL drawing D-8646, the turbine pump is mounted at floor level just inside the southeast corner of the turbine-generator foundation.

REFERENCES:

Aurora Pump Company - General Catalog
G5T Pump Head Curve - Sheet No. 11-PC-2104
Section III - of the Aurora Pump Catalog
G5T Pump Dimension sheet - in same catalog

2. Triplex Power Pump:

This unit is a Worthington 1-1/2 x 2 type VTE standard vertical triplex power pump. The stuffing boxes are located on top of the cylinder, and the crankshaft is at the bottom; resulting in loads being transmitted and supported close to the foundation. All running parts are fully enclosed and lubrication is automatic.

Dwg. 16219

[redacted]

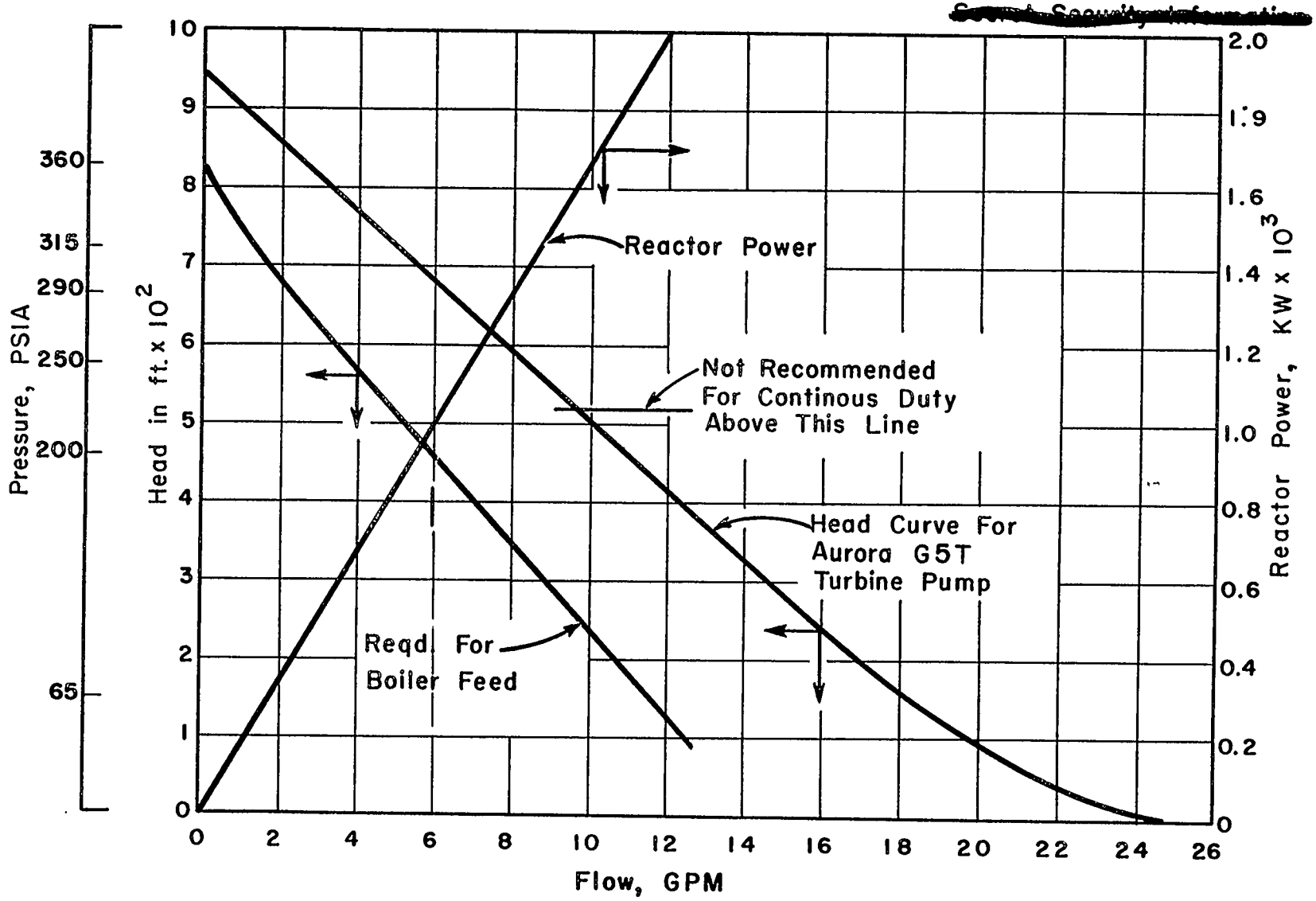

Fig. 2.5.5A. Pressure Head vs. Flow–Feedwater Pump

At the power end the frame, crosshead guides, and bearing supports are cast integral and made of grey iron. Forged steel is used for the crankshaft and connecting rods, and grey iron for the crossheads. Lubrication is pressure fed to crank pin and crosshead pin bearings through drilled ports in the crankshaft and connecting rods. An oil pump delivers oil to the crosshead guides and the main bearings are flood lubricated.

At the liquid end the cylinders are made of forged steel; the cylinder throats and stuffing box glands of bronze; and the valves and plungers of stainless steel. Overall dimensions of the pump itself (no drive) are 35" x 19" x 41" high.

A Reeves variable drive unit (No. 55) is used in conjunction with a chain and sprockets to permit variable flow rates and a 5 H.P., 3 phase, 60 cycle, 1735 rpm, 220/440 volt G.E. Tri-clad induction motor drives this unit.

BASIS OF DESIGN:

This unit is designed to handle from 2 to 6 gpm of water at a discharged pressure of 600 psig. The pump will deliver 2 gpm when operating at 43-1/2 rpm and will deliver 6 gpm when operating at 131 rpm. The minimum operating speed is 40 rpm.

This unit is not recommended for handling demineralized water since it has a forged steel liquid end; however it was chosen because the cost of an all-chrome steel liquid end pump would be more than twice that of the unit chosen, and delivery time was 36 weeks which was much too long.

A 1-1/2 x 2 VTE pump of this type is capable of delivering 19.26 gpm at a pressure of 1200 psi, and operating at 420 rpm. This capacity, however, would require a 20 H.P. motor drive. A 1/2" x 1" middle guide silent chain drive with a 6.5/1 ratio is used with a Reeves unit to achieve a variable drive from 44.2 to 131 rpm.

Although the turbine pump head curve (as shown in Figure 2.5.5A) seems to satisfy the boiler feed water requirements, the manufacturer recommended that we do not operate the pump continuously at pressures above 225 psi, therefore, since the boiler pressure requirements may go as high as 500-600 psi, it was decided to install a triplex pump which can operate easily at higher pressures. This pump was also very useful for experimental testing during start up and checking tests.

LOCATION:

As shown on ORNL drawing D-8646, the triplex pump is mounted on a platform just above ground level near the southeast corner of the turbine-generator foundation.

REFERENCES:

Worthington Bulletin W-414-B44A-"Worthington Power Pumps Type VTE"

Worthington drawing DX-102031 - 2" Stroke Single Acting Vertical Triplex Pumps - Section and List of Parts

Reeves Catalog No. G-435 - Reeves Variable Speed Control

2.5.6 Auxiliary Equipment in Power System (Items 44, 39, 59, 58, 62 and 63 on E-8623)

Each item in the following tabulation of auxiliary equipment will be discussed separately.

	Equipment	Item No.
1.	Feed Water Storage Tank	44
2.	Steam Drum	39
3.	Steam Separator	59
4.	Steam Calorimeter	58
5.	40 Kw Boiler	62
6.	10 Kw Boiler	63

1. Feed Water Storage Tank (Item 44)

PURPOSE:

To store an ample supply of feed water, and to serve as a surge tank and deaerator.

DESCRIPTION:

This is a standard 200 gallon, carbon steel, cylindrical, tank with elliptical dished heads. Tank connections are provided for feed water entrance and exit, draining, venting, and a relief line from the feed pumps. A mercury manometer gage is mounted inside the building to indicate liquid level in the tank. Overall size of the tank is 7' high x 30" O.D., and the maximum pressure rating is 75 psi.

BASIS OF DESIGN:

The volumetric capacity is based on operation at 2000 Kw for a period of 10 minutes without feed water being supplied to the tank. Approximately 120 gallons would be required. Considering the possible D_2O cooler requirements, and adding a safety factor resulted in the selection of a tank having a capacity of 200 gallons.

ACCESSIBILITY:

An estimate of the activities and resulting radiation hazards from the feed water tank at design conditions (1000 Kw power level) is given in section 2.5.3 of this report.

LOCATION:

As shown on Drawing D-8647 the tank is located just outside the west face of the reactor building and is mounted on an angle iron support frame with the bottom of the tank at an elevation of 4 ft above ground level (830 ft).

REFERENCES:

The actual tank purchased is made by the Nolan Company of Newport News, Virginia.

Located and installed as per ORNL drawings:

D-8646 - 250 Kw - Turbine-Generator Equipment and Piping Plan
D-8647 - 250 Kw - Turbine-Generator Sections.

2. Steam Drum (Item 39)

PURPOSE:

To hold up steam flow for the period of time required to segregate the external steam system in the event of a leak in the heat exchanger, and to act as a separator to remove any slugs of water carried over from the main heat exchanger.

DESCRIPTION:

This drum consists of a 16 ft length of 17" I.D. x 1/2" thick pipe capped at both ends. Steam enters the drum through a 4" sch., 80 pipe nipple at one end and leaves by way of a 6" x 4" reducer at the other end. A 1-1/2" pipe opening is provided for heat up steam from the 40 Kw boiler, and a 1/2" pipe nipple connects to a drain line leading to the bottom of the heat exchanger.

BASIS OF DESIGN:

The drum size was dependent on the available space and the availability of the required size pipe. A large diameter pipe reduces the velocity of the steam, and the pressure drop through the drum is limited only to the entrance and discharge losses.

Assuming uniform steam velocity the drum will have a hold up time as follows:

For operation at:

Power	2000 Kw	1000 Kw
Steam Flow	6000 #/hr.	3000 #/hr.
Steam Pressure	65 psia	200 psia
Steam Temperature	298°F	382°F
Specific Volume (vapor)	6.655 $ft^3/\#$	2.288 $ft^3/\#$
Steam Velocity	7.05 ft/sec.	1.2 ft/sec.
Hold up time	2.41 sec.	14 sec.

LOCATION:

As shown on Drawing D-8630 the steam drum is located at the top of the Heat Exchanger Cell. The longitudinal centerline of the tank runs north and south at an elevation of 16 ft above floor level (830 ft).

REFERENCES:

Fabricated as per following drawings:

1. Matt. Corcoran and Company Dwg. No. 1664
   Steam Drum - Item 39 - C&CCD, Oak Ridge, Tenn.

2. ORNL Dwg. C-8624 - Steam Drum - Item 39.

Installed as per ORNL drawings:

D-8630 - Heat Exchanger Cell Piping and Equipment Plan and Elevation
D-8631 - Heat Exchanger Cell Piping and Equipment Sections

3. Steam Separator (Item 59)

PURPOSE:

To remove excess moisture from the reactor steam before it enters the turbine.

DESCRIPTION:

The separator is a 4", 400# ASA flanged, horizontal, type "E", cast carbon steel unit manufactured by the Wright-Austin Company of Detroit, Michigan. Overall dimensions of the separator are 26" high x 15-1/2" between flange faces x 10" wide.

To prevent separated moisture from again coming in contact with the flow of steam, there is provided an extended inlet and a protected outlet. After striking a corrugated, oblique baffle, the steam passes over the baffle to the outlet. In its path around the baffle, the steam is subjected to a continuous scrubbing action which eliminates entrained moisture without causing back pressure. The separator is cast in one piece, and has a large internal area and extra capacity to provide a reserve of steam for sudden load fluctuations. This unit also prevents the passage of slugs of water and thus offers extra protection to operating equipment.

BASIS OF DESIGN

Normal Operation:

Flow Rate	3000 lbs/hr.
Pressure	200 psia
Saturated Steam Pressure Drop Through Separator	Negligible

Maximum Operation:

Flow Rate	6000 lb/hr.
Pressure	65 psia
Saturated Steam Pressure Drop Through Separator	1.7 psi

(Pressure drops read from chart on page 517 of W. A. Catalog No. 500).

The maximum capacity of this separator for efficient separation is 6000 #/hr of saturated steam at 50 psig and 13000 #/hr of saturated steam at 200 psig.

LOCATION:

As shown on ORNL drawings D-8646 and D-8647, the separator is installed in the main 4" steam line adjacent to the turbine trip-throttle valve.

REFERENCES:

Wright-Austin Catalog No. 500 - Separators.

Wright-Austin Dwg. No. 5334 - 400# Type "E" Horizontal Separator.

4. Steam Calorimeter(Item 58)

PURPOSE:

To provide a means of measuring the quality (moisture content) of the steam entering the turbine.

DESCRIPTION:

The instrument chosen is an Ellison U Path Steam Calorimeter Manufactured by the Ellison Draft Gage Company of Chicago.

After entering the sampling pipe, steam flows to an orifice where it is reduced to approximately atmospheric pressure. Below the orifice the steam impinges against a plane surface where it is divided into four atomized streams, meeting again and mixing below the orifice plug. The throttled steam in the steam chamber flows in a U-path, down one side and up the other, escaping at the top, where it turns and flows downward through the steam jacket and out at the bottom to the atmosphere. To reduce the calorimeter radiation losses, the down flow jacket is insulated by filling a 1" space on the sides and 1-1/2" space on the top with lamp black. The thermometer is inserted directly into the steam bath and is held in place by means of a packing cup which terminates in the steam jacket.

BASIS OF DESIGN:

Wet steam is a mixture of saturated steam and liquid at the same temperature. The quality of the mixture is the percentage of its aggregate weight which is saturated steam. This quality is determined by means of a steam calorimeter receiving steam from an appropriate sampling nozzle in the steam line. A throttling calorimeter (the type we are using) operates on the principle that when steam passes through an orifice from a higher to a lower pressure the enthalpy of the steam remains unchanged providing there is no loss due to radiation.

Steam charts provide a convenient means for determing the quality of steam without the use of the following equation.

$$m = 100 \frac{H-h-K(T-t)}{L}$$

where:

m = % of moisture
H = total heat in steam at calorimeter (enthalpy hg = Btu/lb.)
h = total heat due to pressure in calorimeter (enthalpy hg. = Btu/lb)
K = specific heat of superheated steam (Btu/lb., ^{o}F)
T = temperature of superheat in calorimeter (^{o}F)
t = temperature due to pressure in calorimeter (^{o}F)
L = latent heat in steam line (enthalpy hg_f = Btu/lb.)

Q = quality = 100 - m = %

The correct orifice size to be used with the calorimeter is based on a flow rate of approximately 100 lbs/hr. The actual diameter of the orifice is found by using Napiers formula:

$$\text{Steam Flow } (\#/hr) = 100 = \frac{\text{abs. pressure x area } (in^2) \text{ x } 3600}{70}$$

Final diameter of the orifice is determined by solving the above formula for A and then determining the diameter to satisfy the calculated area.

When operating, the calorimeter exhausts directly to the atmosphere; if however, the steam becomes too radioactive to be discharged near personnel it would be desirable to connect the calorimeter exhaust pipe directly to the condenser. If this is done the discharge pressure at the condenser will have to be measured and used in calculating the quality of the steam.

LOCATION:

As shown on drawings D-8646 and D-8647 the calorimeter is located in the vertical steam main line adjacent to the 90° ell which preceeds the steam separator. This location was chosen since it was the best available based on the recommendations of the ASME Power Test Code.

REFERENCES:

Ellison Bulletin - Eight - B - "U Path Steam Calorimeter"
ASME Test Codes - Information on Instruments and Apparatus
- Part II - Determination of Quality of Steam.

5. 40 Kw Boiler (Item 62)

PURPOSE:

To provide an auxiliary source of steam to heat the reactor fluid in the main heat exchanger for start-up and for operation at zero power and 250°C. This unit may also be used to heat various solutions used in producing a passive film on the stainless steel surfaces exposed to soup.

DESCRIPTION:

Four, 10 Kw boilers are bolted to a common header to form the 40 Kw unit. The header is horizontal with the 10 Kw units hanging vertically; heater terminals at the bottom. Individual boiler shells are made of 36" long, 6" schedule, 120 pipe with a flat heat at one end, and a reducer and 13" O. D. flange at the other. Immersion heaters are silver soldered to the removable flange head and the electrical connections to the heater terminals are housed within a terminal cover box which is attached to the removable flange.

The header is made of a 72" long piece of 6" schedule 120 pipe with welded flat heads and a return drain line back to the base of each 10 Kw unit. This drain line is used to return any slugs of water carried over by the effluent steam, and is also used to measure and control the water level in the boilers.

BASIS OF DESIGN:

Each 10 Kw heater assembly is made of three heaters bent back on each other to reduce space requirements. The shells were made long enough to insure having the heaters submerged at all times. Each heater is a 440 V, 3700 watt tubular element with an inconel sheath and mica insulation as manufactured by the Industrial Electric Manufacturing Company of Allegan, Michigan. Any of the 10 Kw units can be removed and the flanged openings blanked off if desired. Most of the flanges were fabricated from steel plate in the ORNL shops, since they were not in stock, and delivery time was too long. A Brown 20" mercury manometer connected to a Brown flow recorder is used as the level instrument, with high and low level contacts connected to the boiler heater circuit to prevent the heaters from operating if the level is outside the limits.

A pressure limit switch is also incorporated to disconnect the heaters if the pressure gets too high. This unit is designed for a maximum working pressure of 1500 psi, and a maximum temperature of 600°F. The boiler was hydrostatically pressure tested at 2250 psi.

MATERIALS:

All piping used is ASTM-A-106-B, and all flange material is mild steel (0.35 C Max.). Stud bolts are ASTM-A-193-B7, and the nuts ASTM-A-194-2H. The gaskets are Flexitallic style stainless steel with a Canadian asbestos filler.

LOCATION:

As shown on D-8631 the 40 Kw boiler is mounted on the west wall of the reactor, with the horizontal centerline of the header located 4 ft. above floor level (830 ft.).

REFERENCES:

The boiler was fabricated as per the following ORNL drawings:

D-9708 - 10 Kw Boiler Assembly and Details.
D-9710 - 1500 psi Boiler Details.
D-9712 - Bending Details of Heaters.
D-9709 - 10 Kw Boiler (Single Unit) Details.
C-9711 - 1500 psi Boiler Details

The following drawings were used to install the boiler:

D-8631 - Heat Exchanger Cell - Piping and Equipment Sections.

6. 10 Kw Boiler (Item 63)

PURPOSE:

To supply steam to the pressurizer jacket (Item 2) which in turn supplies the heat to raise the system pressure from the vapor pressure of the soup at operating temperature (560 psi) to 1000 psi.

DESCRIPTION:

As shown on drawing D-8310 the 10 Kw boiler has a shell made of a 6" schedule 160 pipe, 29" long which has a welding cap and long welding neck flange on one end; and a 6" x 3" reducer with a 3" - 1500 psi ring joint flange on the other. A 10 Kw Chromalox immersion heater joined to a 1500 psi, 3" blind flange as furnished by the E. L. Weigand Company of Pittsburgh, Pennsylvania, is used.

BASIS OF DESIGN:

This vessel was fabricated and tested in accordance with the 1950 ASME Code for Unfired Pressure Vessels. A working pressure of 1500 psi, and working temperature of 600°F were assumed. The vessel was hydrostatically tested at 2250 psi.

Since the immersion heaters must be kept below the water level in the boiler, the unit should only be used in an upright position with the heater flange at the bottom. The shell length was designed to provide adequate liquid level above the top of the immersion heaters.

Pressurization is provided by heating the solution in the upper part of the pressurizer by means of a steam jacket. This sytem pressure is then determined by the vapor pressure of the solution, so by controlling the solution temperature the pressure may be controlled. Vapor pressurization is preferable to a gas pressurization system as it prevents the accumulation of an explosive mixture of oxygen and hydrogen in the pressurizer.

In the region in which the reactor will operate the vapor pressure changes so rapidly with temperature that pressure rather than temperature control is used. Consequently, the heaters of the 10 Kw boiler are switched on and off by the pressurizer pressure controller to maintain the correct vapor pressure. These heaters are so connected electrically that the wattage being switched can be set manually to minimize pressure fluctuations. The boiler is protected by instruments LlA-48 and PC-20, the first for water level and the second for pressure protection. Both instruments are located inside the shield for safety, since a leak from the pressurizer into the steam jacket would make them hot. High and low contacts are connected in the heater control circuit so the heaters cannot operate if the water is low or if the boiler has been over-filled. PC-20 is a 1500 psi pressure switch also connected in the heater circuit to prevent over pressure operation.

MATERIALS:

The boiler shell is made of seamless ASTM-A106 pipe, the welding cap of ASTM-A-234; the reducer and flange of ASTM-A-105; and the oval ring joint and gasket of soft steel. Bolts are made of ASTM-A-193-B7, and nuts of ASTM-A194-2H.

LOCATION:

As shown on ORNL drawing D-8628 the 10 Kw boiler is located in the Reflector Cell adjacent to the D_2O cooler (Item 20) with its flange faces at an elevation of 5" below floor level (830 ft.).

REFERENCES:

This unit was fabricated and installed as per the following ORNL drawings:

D-8310 - 10 Kw, 1500 psi Electric Steam Generator - HRE Item 63
D-8628 - Reflector Cell Piping Plan and Elevation.

2.6 The Emergency Cooling Water System (Item 46 on E-8623)

2.6.1 Purpose and General Description

In event of complete failure of all services to the reactor, the "soup" and D_2O will be immediately dumped to the storage tanks. Considerable heat will be released as enthalpy from the high pressure, high temperature liquids in addition to heat released by radioactive decay of fission products in the "soup" dump tanks. Since it is necessary to cool these tanks in event of failure of the water supply to the building, the cooling system is designed to operate as an independent free convection loop to dissipate this heat to the air.

Figure 2.6.1A shows the principal components of the emergency cooling system. The five D_2O dump tanks, the D_2O dump tank inlet header, and the inner "soup" dump tank and condenser (item 68) are all jacketed with 11 ga. sheet steel, forming an annulus around each tank. These annuli are connected in parallel to a convection loop consisting essentially of approximately 200 linear feet of 1-1/4 in. Series 38 finned tubing and a 200 gallon maximum capacity storage or surge tank on top of the shield with necessary connecting piping.

Immediately following a dump of the soup and reflector into the dump tanks, boiling will occur in the jackets until heat stored as enthalpy in the solutions at high pressure has been reduced to correspond to that at lower pressures in the dump tanks. An equilibrium condition will be reached after boiling approximately 30 gal. of water, at which time the finned-tube, natural convection system will remove up to 28 Kw of heat without boiling.

A pressure relief valve set at 15 psi gauge is specified for the surge tank vent so that under boiling conditions the system will operate at that pressure giving a greater Δt for condensation of steam in the finned-tubes. The surge tank is placed at the top of the cold leg rather than the hot leg so that steam rising from the jackets must pass through the finned tubes before escaping.

MATERIALS

The jacketing material, finned tubes and surge tank are all fabricated from carbon steel.

CONNECTIONS

The connections and line sizes are all clearly indicated by the reference drawings and piping schedule.

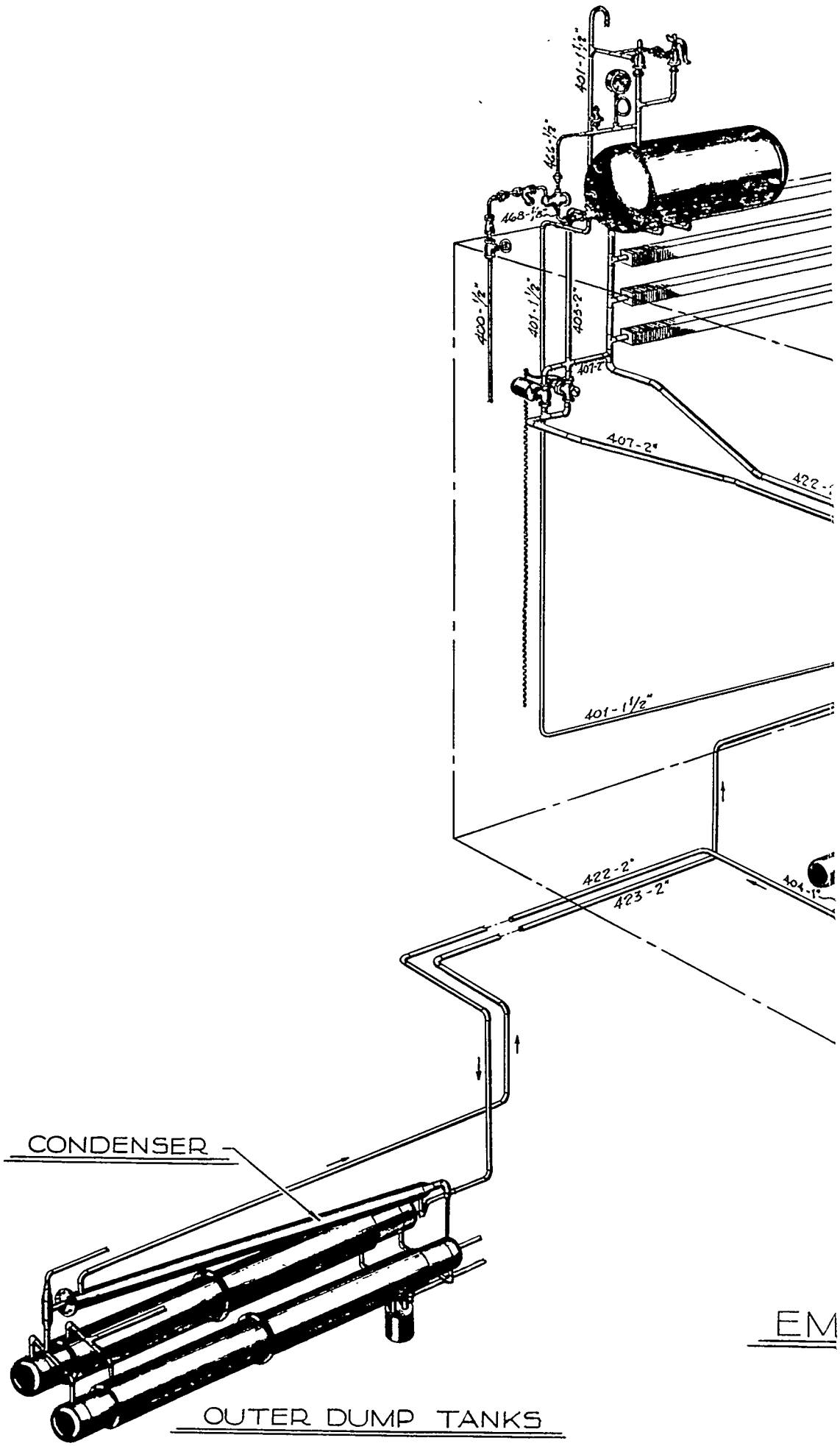
401-1½"
422-½"
468-½"
400-½"
401-1½"
403-2"
407-2"
407-2"
422-
401-1½"
422-2"
423-2"
404-1"
CONDENSER
OUTER DUMP TANKS
EM

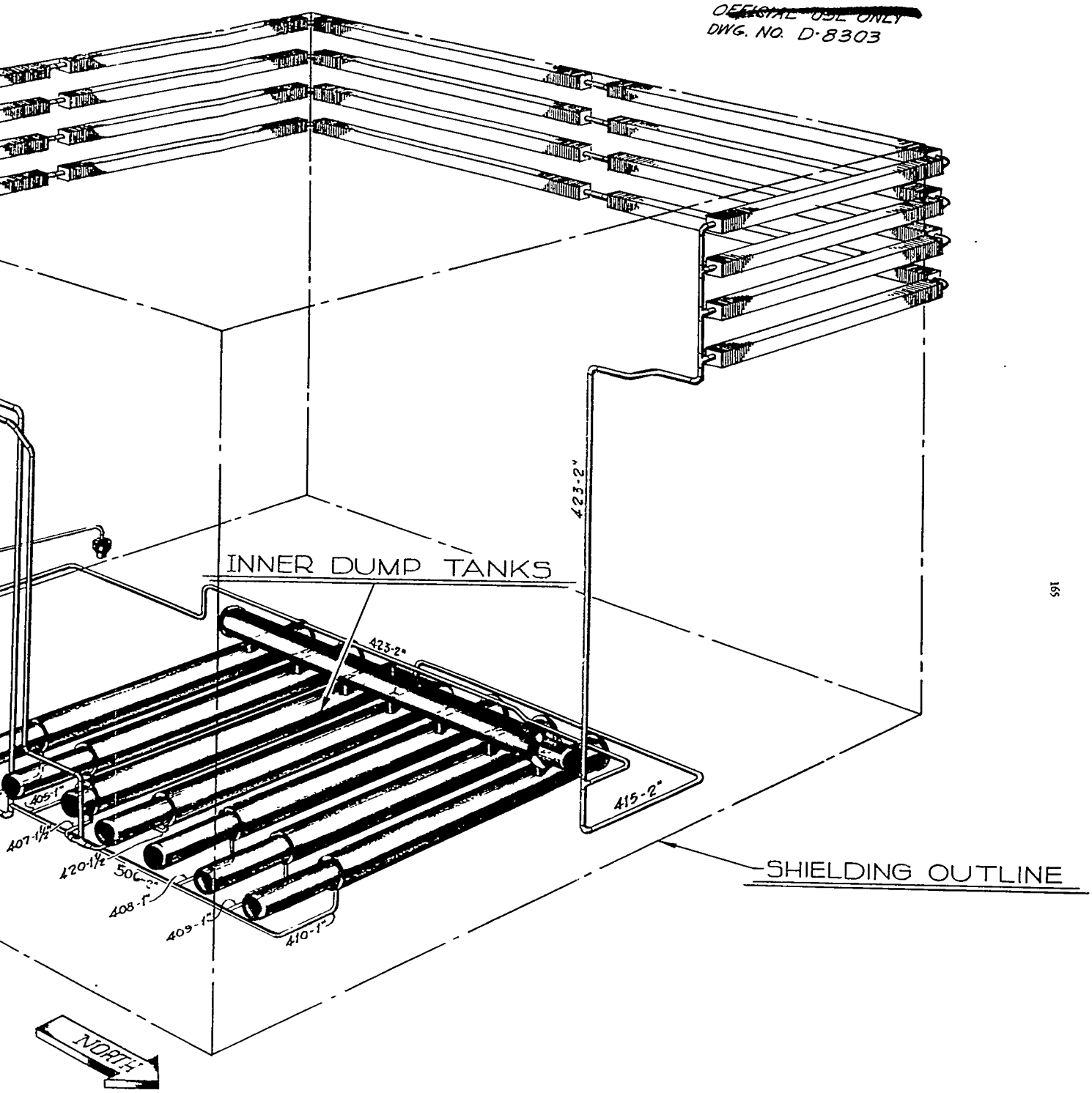

FIG. 2.6.1A

H.R.E.

ERGENCY COOLING SYSTEM

EQUIPMENT LOCATION:

(1) Jackets - surrounding dump tanks and D_2O vapor header.

(2) Finned Tubes - On the south, west and north faces of the shield near the shield top.

(3) Surge Tank - On top of the south east corner of the shielding structure.

2.6.2 Basis of Design

(1) Heat after shutdown. The heat given off by the fission products after 1000 Kw operation for infinite time is tabulated in Table 2.6.2A.

TABLE 2.6.2A

Time after shutdown	10 sec	1 min	1 hour	8 hours	1 day	7 days	30 days
Rate of heat liberation	40 Kw	28 Kw	12.4 Kw	8.0 Kw	6.6 Kw	4.4 Kw	3.3 Kw
Integrated heat after 10 seconds	0	0.5 kwh	16 kwh	81 kwh	193 kwh	915 kwh	2940 kwh

(2) Reflector dumping time. To dump the reflector from 6 in. above the core tank to bottom of the core is calculated to be approximately 22 sec.

(3) Soup dumping time. Estimated time from 1 to 2 minutes for complete dump.

(4) System resistances

2" pipe and equivalent length of fittings	78 ft
1-1/2" finned tubes, 4 rows in parallel, 50 ft each	200 ft
1" pipe and equivalent length of fittings	12 ft
3/4" pipe and equivalent length of fittings	36 ft
10-5/8" jackets on 8" pipe, 6 in parallel, 7 ft each	42 ft
10-5/8" jacket on 8" pipe, 2 in parallel, 10 ft each	20 ft

(5) Heat Transfer Area

6 tanks in parallel	101.5 ft^2
2 tanks in parallel	45 ft^2

(6) Heat transfer coefficients

Heat rating of 1-1/4 in. Series 38 fintubes	931 Btu/hr-ft
Overall coeff. of heat transfer in dump tanks	100 Btu/hr-ft^2-$^\circ$F

(7) Operating characteristics - Two conditions of operation have been assumed.

a. The D_2O tanks act as a condenser for the D_2O evaporator.

b. The cooling system dissipates heat after shutdown.

TABLE 2.6.2B

Table of Operating Characteristics

	Condition (a)	Condition (b)
Heat removal, Btu/hr.	45,000	95,000 *
Velocity in 2" pipe, ft/sec	0.506	0.680
Mass flow rate, # H_2O/hr.	2620	3480
Temp. of Hot Leg, $^\circ$F	143	188
Temp. of Cold Leg, $^\circ$F	126	160
Average Temp., $^\circ$F	134.5	174

*Radioactive heat release 1 minute after shutdown as based on a 1 minute soup dump time.

VENDOR AND REFERENCE DRAWINGS

Installed by ORNL personnel per drawings;

Finned Tubes	Trane Co. Bulletin DS-392
Surge Tank	Purchased
Tank Cooling Jackets	Dwg. D-8633 and D-9592
Emergency Cooling System	Dwg. E-9066

2.7 The Helium Pressurizer System

PURPOSE:

This system provides a means of maintaining a 1000 psi pressure in the pressure vessel, simultaneously balancing out the operating internal pressure of the core tank. The flow path also creates a vapor purge and a cooling atmosphere for the control rod drive assemblies.

2.7.1 General Description

The helium for this system is supplied from a cylinder station (Item 31) described under 2.7.2, this manual. Line 262 conducts the helium from the pressure reducing valves to the Silica Gel Adsorbers (Item 32a and b) described further in this manual under 2.7.3. These adsorbers are located over the instrument lead bridge and on the building wall north of the reactor. From the adsorbers, line 267 goes into the reactor after passing through two control valves located on the North Face of the shield. Upon entering the shield, said line passes thru a check valve and branches out into lines 267, 268 and 269. These last three lines lead into the top of each of the three control rod housings, Item 47. The helium flow is then down thru the housings and into the pressure vessel, Item 18.

The exit from the vessel is by means of line 270 which tees into line 150. Said line 150 leads into the D_2O dump tanks, Item 22. Inserted in line 150 is a letdown valve by-passed by line 271 containing a rupture disk and relief valve. The letdown valve is also by-passed with a helium sampler loop described under 5.4, this manual.

To minimize accumulation of dissociated D_2O in the reactor the atmosphere in the vessel is circulated thru a recombiner. This Reflector Off-Gas Recombiner Loop is described under 2.3.5, this manual. Line 172 serves the recombiner loop and tees off of line 270, which is the helium line from the reflector vessel.

2.7.2 Helium Cylinder Station (Item 31)

The helium cylinder station is made up of 18 standard cylinders located under a shelter just outside the north wall of the 7500 building. These cylinders are racked into three groups of six cylinders each. The volume of each cylinder is 1.53 cu ft and the charged pressure 2200 psi. The cylinders in each group are connected commonly by a circular manifold. Header lines 260, 263 and 264 are led from each group to the building. The lines enter the building at the north east corner of the control room. Each of these lines is provided with a pressure reducing valve, a valved tee for bleed-off and a shut-off valve. On leaving this station the lines are joined together to form line 262 which serves the Silica Gel Adsorbers.

Calculation indicates approximately nine cylinders are required to pressurize system to required operating level. The three group cylinder arrangement allows isolation of any one group for replacement of discharged cylinders.

2.7.3 Silica Gel Adsorbers (Items 32a and b)

Inserted in the Helium Pressurizer System are two Silica Gel Adsorbers, the purpose of which is to dry the helium prior to its entering the reactor. These units are constructed per Dwg. C-8972. The installation and design of these units is such that one or the other may be taken off the line and recharged as required. This drying process is necessary to prevent dilution of the D_2O.

The volume of each adsorber is about .22 cu ft which allows a charge of approximately 9-1/2 lbs of silica gel. Assuming a helium moisture content of .02% this amount of silica gel should handle about 125 complete changes of gas for the system.

2.8 The Refrigeration System (Equipment Items 84, 85, and 89 on E-8623)

PURPOSE:

Two cold traps are installed in both the reflector and soup off-gas systems for removal of moisture in the effluent gas streams. One trap in each system will be defrosting while the other is operating.

Moisture is removed from the reflector gas stream to prevent the escape, and therefore loss, of D_2O. Loss of moisture in the soup gas stream would eventually result in upsetting the concentration balance; and excessive moisture in either gas stream would poison the charcoal adsorber beds.

DESCRIPTION:

The cold trap designs are approved on drawing D-9061.

Item 84 - Fabricated by all welded construction with full penetration welds except on fins. Welds to be made by inert gas shielded arc process with flow of inert gas maintained on back side of weld. The cold traps are assembled from the following components:

1. One 3" Sch 40 Type 347 Stainless Steel pipe 10'-7-1/4" long.
2. One 3" Sch 40 Type 347 Stainless Steel pipe cap.
3. Two 1/2" Sch 40 Type 347 Stainless Steel pipe inlet and outlet nipples for gas flow.
4. One 3" O.D. x 1.9 I. D. x 5" long ring type mist extractor purchased from Otto W. York Company.

5. One longitudinal finned pipe with 10'-0" long fins. Fins are 1/2" high x 0.035" thick Type 347 Stainless Steel bonded on 1-1/2" Sch 40 Type 347 Stainless Steel pipe - 36 fins equispaced - purchased from Brown Fin Tube Company

6. One inclined jacket head for complete drainage.

7. One thermocouple well in the outlet gas stream as purchased from the Thermo Electric Company.

Item 89 - Fabrication is similar to Item 84 with the exception of the length of finned tube which is 3'-0" long and the 3 in. Sch 40 pipe housing which is 3'-6" long. In both items, the gas being cooled flows in the annulus over the finned tubes and the refrigerant flows through the finned pipe.

Item 85 - The Refrigerant Unit is a Brunner Model #W2002 F1, Type A, Serial No. 477687, assembly consisting of:

1. One Freon 12 compressor - Model R5301.
2. One oil separator similar to Temprite Products Corporation Model #104.
3. One strainer - similar to Alco Valve Company Cat. #920 - 1/2 with 1/2" O.D.S.
4. One drier - similar to Mueller Brass Company Streamline Deluxe Drier #A-13599, 1/2" inlet and outlet.
5. One liquid sub-cooler similar to Acme Industries Company Model #615, 1/2" O.D. liquid, 1-1/8" suction.
6. One expansion valve - similar to Alco Valve Company Cat. #TCLOOF, 3/8" solder inlet and 1/2" solder outlet.
7. One solenoid valve - similar to Alco Valve Company Cat. #S155 - 3/8" O.D. solder inlet and outlet.

This unit is specified on Receiving Report WCX-A-23863-A as follows:

A. Evaporator Temp., - 40°F
B. Evaporator press. approx. 9-10 psia
C. Heat load, 5000-6000 Btu/hr
D. Compound compressor with liquid sub-cooler between stages.
E. Motor, 3 phase 208 volt - approx. 3 HP
F. Drive, V-belt
G. Condenser, water cooled
H. Receiver, charged with Freon - 12
I. Receiver, capacity, approx. 35-40#
J. Control, dual pressure
K. Safety device, safety valve and a high pressure cutout switch.

BASIS OF DESIGN:

A. Soup off-gas Cold Traps. It is assumed that flow through the soup off-gas cold traps will be essentially negligible except for leakage or possible bleeding-in of inert gas therefore the basis of calculation is taken as 5 standard ft^3/hr of inert gas saturated with water vapor.

Data:

1.	Inert gas	5 std ft^3/hr
2.	H_2O vapor	0.0174 lb/hr
3.	Heat load-total	282.3 Btu/hr
4.	Temperature differential	49.2 °F
5.	Heat transfer area required	5.2 ft^2
6.	Length of fin-tube required	2.0 ft minimum
7.	Insulation	2" foam glass or equivalent

B. D_2O Off-Gas Cold Traps. The D_2O traps are designed to handle 4 lbs of helium plus 1.35 lb of D_2O vapor per hour which at standard conditions amounts to a total of 435.5 ft^3/hr of gas vapor mixture.

Data:

1.	Inert gas (helium)	408 ft^3/hr
2.	D_2O vapor	1.35 lb/hr
3.	Temperature differential	49.2 °F
4.	Heat transfer coefficient	1.78 Btu/hr-ft^2-°F
5.	Heat transfer area required	19.8 ft^2
6.	Length of fin-tube required	7.6 ft minimum
7.	Total heat load on refrigerant	2372 Btu/hr.
8.	Insulation	2" foam glass or equivalent

C. Pre-Cooling Times

1. With one soup and one cold trap in operation

Time required to pre-cool D_2O cold trap to - 40°F	1-1/2 hr
Time required to pre-cool soup cold trap to - 40°F	36 min.
Time required to pre-cool both to - 40°F Simultaneously	2 hr 6 min.

2. At Start-up

Time required to pre-cool one soup and one D_2O cold trap to - 40°F	58 min.

EQUIPMENT LOCATION

Item 84 - The two D_2O off-gas cold traps are vertically installed east of the centerline in the reflector cell (see dwg. D-8628).

Item 89 - The two soup off-gas cold traps are installed in an inclined position in the soup equipment location cell (see dwg. D-9053).

Item 85 - The compressor unit is located in the services room, south of the Pulsafeeder pump installations.

REFERENCES:

Dwg. D-9061 - Cold Traps - Items 84 and 89.
Dwg. C-9600 - Cold Trap Controls
Dwg. C-8975 - Refrigerant Unit

2.9 Leak Detector Systems

Leak detection for the reactor is accomplished by four methods or systems, each peculiar to the equipment and/or process fluids. A description and method of operation of each system follows under appropriate sub-title.

2.9.1 Heat Exchanger Leak Detector

As shown on Vendor's (A. O. Smith Corp.) Dwg. MV-7314 (ORNL No. E-9584) the tube sheet of the exchanger is provided with leak detection (top and bottom) or "tell-tale" drillings. These two diametrically opposite drillings lead from the space between the carbon steel and stainless steel sections of the tube sheet to the outside at which point they are provided with standard 1/4 inch pipe taps.

Line number 950, a 1/4 inch pipe, is tapped into the bottom leak detector drilling and run to a tee in line 322 downstream from valve 322-B. An extension handle valve, operated from the west face of the shield is installed in line 950.

Line number 951 is a similar 1/4 inch pipe tapped into the top leak detector drilling. This line consists of a short riser which is capped just under the shield plug.

Line 952 tees into 951 and leads to a pressure gauge in the D_2O cell. This gauge is modified to mount a micro-former coil to act as an electrical transmitter. The pressure readings are transmitted to a receiver on the North Face of the shield.

During operation of the reactor the valve in line 905 is closed, thereby sealing the leak detector system from the atmosphere. Upon start-up the heating of the exchanger will expand the air in the leak detector system and when a steady state is reached, this will become the operating "zero".

Should a leak occur the pressure will rise accordingly and register by the receiver on the North Face.

A leak, which can occur on the soup or steam side of the tube sheet, can be detected by an increase or decrease in the system pressure.

By means of the cap on the upper leg and the valve in the lower leg, the system may be purged or washed down when required. The lower leg drains by way of line 322 into the hot waste system.

2.9.2. High Pressure Soup System Leak Detector

Several sets of ring joint flanges have been installed in the high pressure soup system to facilitiate assembly and maintenance. One of each pair of flanges is drilled and tapped for a leak detector connection. Each ring has a small hole drilled through it to connect the groove spaces of each flange pair.

A high pressure autoclave fitting is screwed into the flange and adapted to a 1/8 inch stainless steel tube. This tube passes through the shield to the indicating and detection equipment on the North Face of the shield, and is valved at this point.

All lines from the flanges within the shield terminate at a common header which is separated into two sections by a hand valve.

The header is connected to a reservoir which is in turn connected to a helium pressure station. In operating condition the system is fully charged with distilled water at a pressure of 1400 to 1500 psi. This pressure is maintained by the helium station, and gauges are used to indicate the system pressure. All header valves (except spares) are normally open.

The leak detector system is maintained at a pressure 400 to 500 psi greater than the high pressure soup system. This differential is to assure that a "leak" would be into, rather than out of, the soup system.

Should a leak occur, the gauges at the North Face will show a pressure drop and a pressure switch would sound an alarm. Normally the reactor will be checked several times each shift, and should a leak occur it may be located by means of the isolation valves at the header on the North Face of the shield.

2.9.3 High Pressure D_2O and Helium System Leak Detector

This system ties into all flanges, including those at the pressure vessel, of the high pressure D_2O and helium system. The manner of connection at the flanges is the same as for the High Pressure Soup System per 2.9.2, and is schematically shown in Figure 2.9.3A.

Unlike the soup leak detector system, this system is not normally pressurized. The lines from the flanges are led to a common header on the West Face of the shield and from there a line goes to the D_2O dump tanks. This arrangement allows leakage to remain in the system. All lines are valved at the header which is connected to a high pressure helium source and provided with a gauge. This type of connection allows a periodic check of all leak detector stations by valving and pressurizing accordingly.

2.9.4 Valve Leak Detector System

All valves in the high pressure systems are tapped for leak detector connections. These taps are located in such a manner as to indicate a leak in the diaphragm or bellows seal.

An electrical pressure switch is screwed into each tap. This switch is a standard automobile stop light switch usually located on the master cylinder of the brake system. The contacts are arranged to "make" at a maximum applied pressure of 100 psi. The unit itself will withstand 2000 psi without failure.

Should a leak occur the switch will close and a tell-tale lamp, located on the north shield face, will indicate the valve leak.

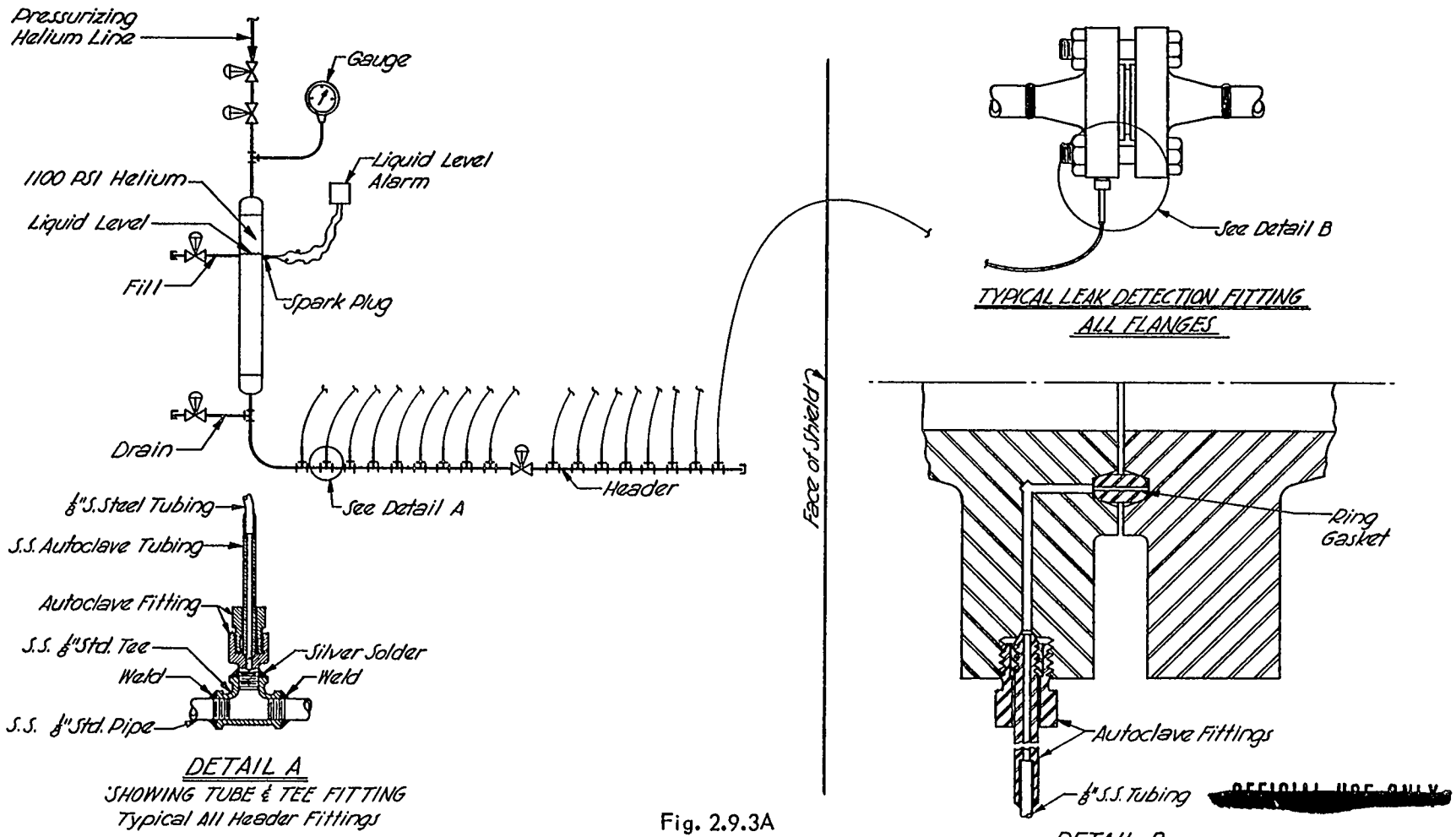

Fig. 2.9.3A

PROPOSED LEAK DETECTION SYSTEM
SCHEMATIC DIAGRAM

2.10 Handling Tools and General Accessibility of Equipment

Figures 2.10A and 2.10B show the working ends and handle ends, respectively, of several HRE remote handling tools. Each tool is numbered and identified as follows:

Tool No.	Title	Purpose
1	Handling Rig	To support large impact wrench and its extension.
2	Handling Rig	To facilitate removal of the control rod top flanges.
3	Angle Lift Hook	To aid in removing the feed pumps.
4	Cutting Tool	To cut wire from insulation, and for miscellaneous cutting.
5	Extension Socket Wrench	To tighten or loosen bolt heads and nuts in a horizontal plane.
6	Engagement Tool	To remove safety rod guide assembly.
7	Drift Pin	To line up bolt holes etc.
8	Curve Lift Hook	To aid in removing the feed pumps.
9	Speed Wrench (90° Bevel Gearing)	To start or remove nuts in a vertical plane after they are loosened.
10	Armature Holder	To remove the control rod armature.
11	Angle Air Impact Wrench	To loosen or tighten bolt heads and nuts in a vertical plane.

In addition to the tools already mentioned there is also a large air impact wrench (Figure 2.10C)(made by Ingersoll-Rand Company) which is used to tighten and loosen the large bolts which hold down the reflector vessel flange (See Figure 1.1C); an extension handle pipe wrench (Figure 2.10D); two offset ratchet wrenches (L.H. and R.H.) as shown in Figure 2.10E; and an extension socket wrench which is used to unbolt flanges in vertical piping (See Figure 2.10F). The latter tool has a retainer which facilitates removal and placement of bolts and nuts.

The design of tools to accomplish the remote and semi-remote unbolting and/or removal of equipment from within the shield of the HRE is incomplete, however, the reactor is an experiment, and the final tool designs will be dependent on radiation information not yet available.

Photo 10192
Unclassified

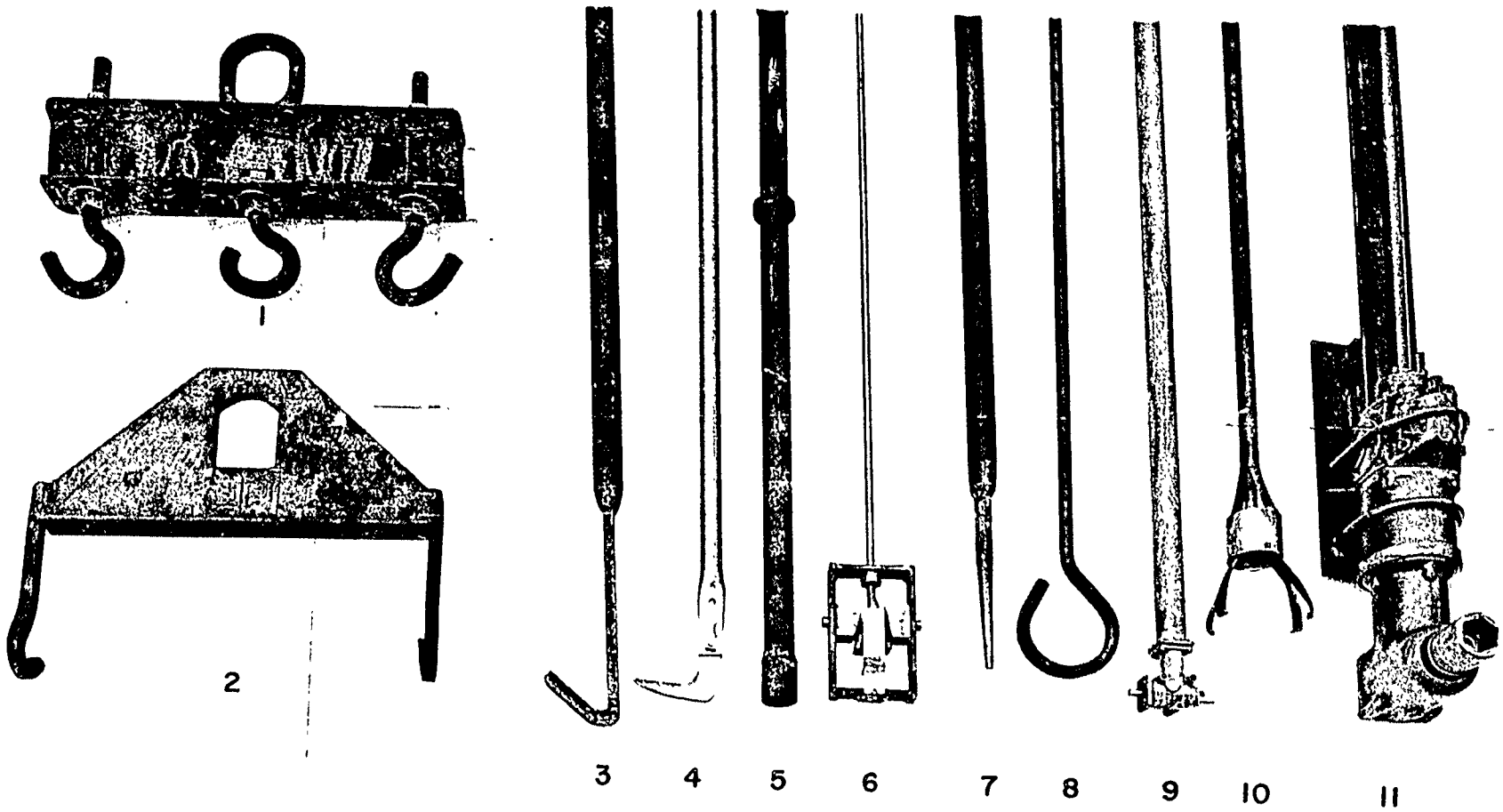

Fig. 2.10A. Remote Handling Tools

Photo 10190
Unclassified

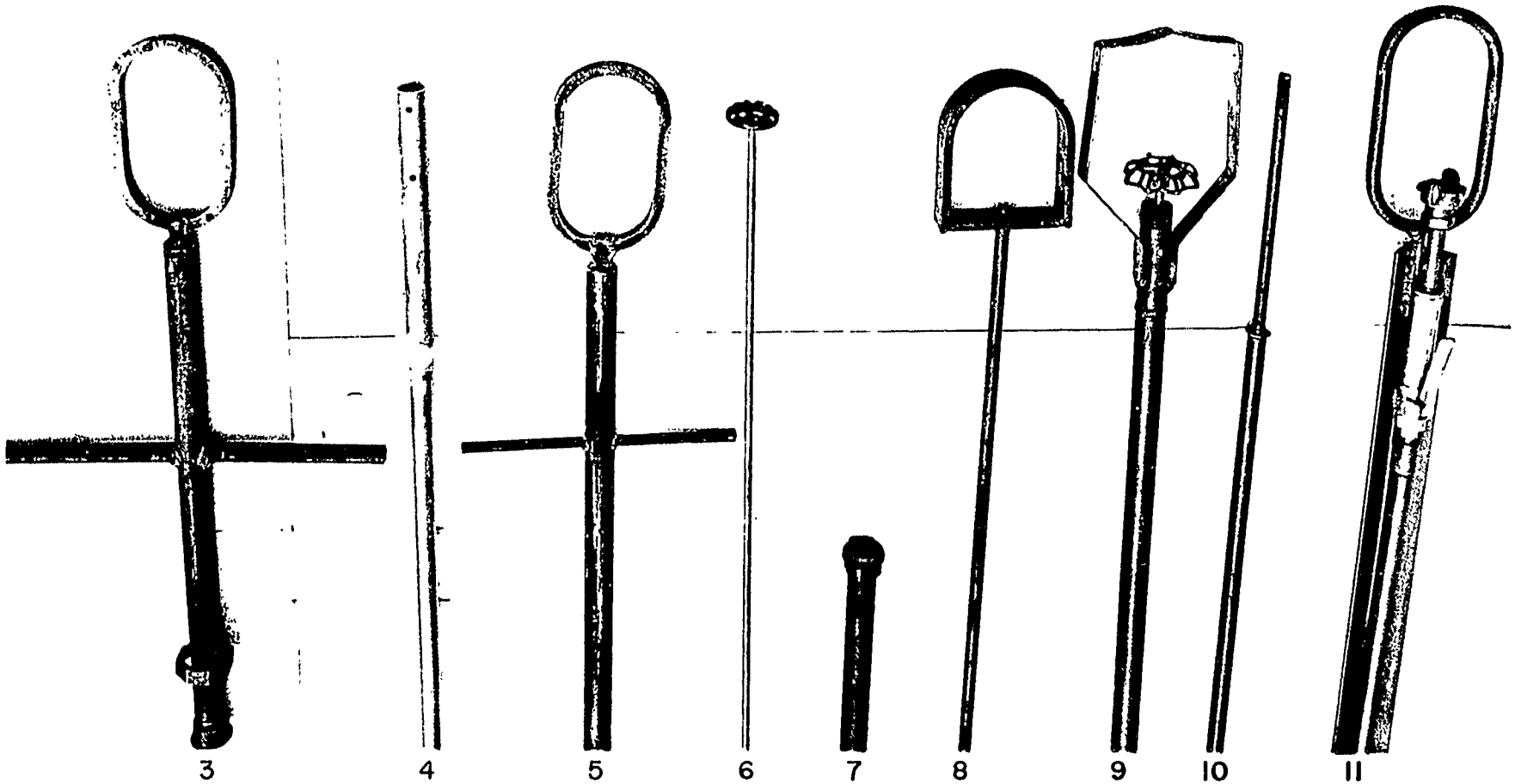

Fig. 2.10B. HRE Remote Handling Tools (Handle ends)

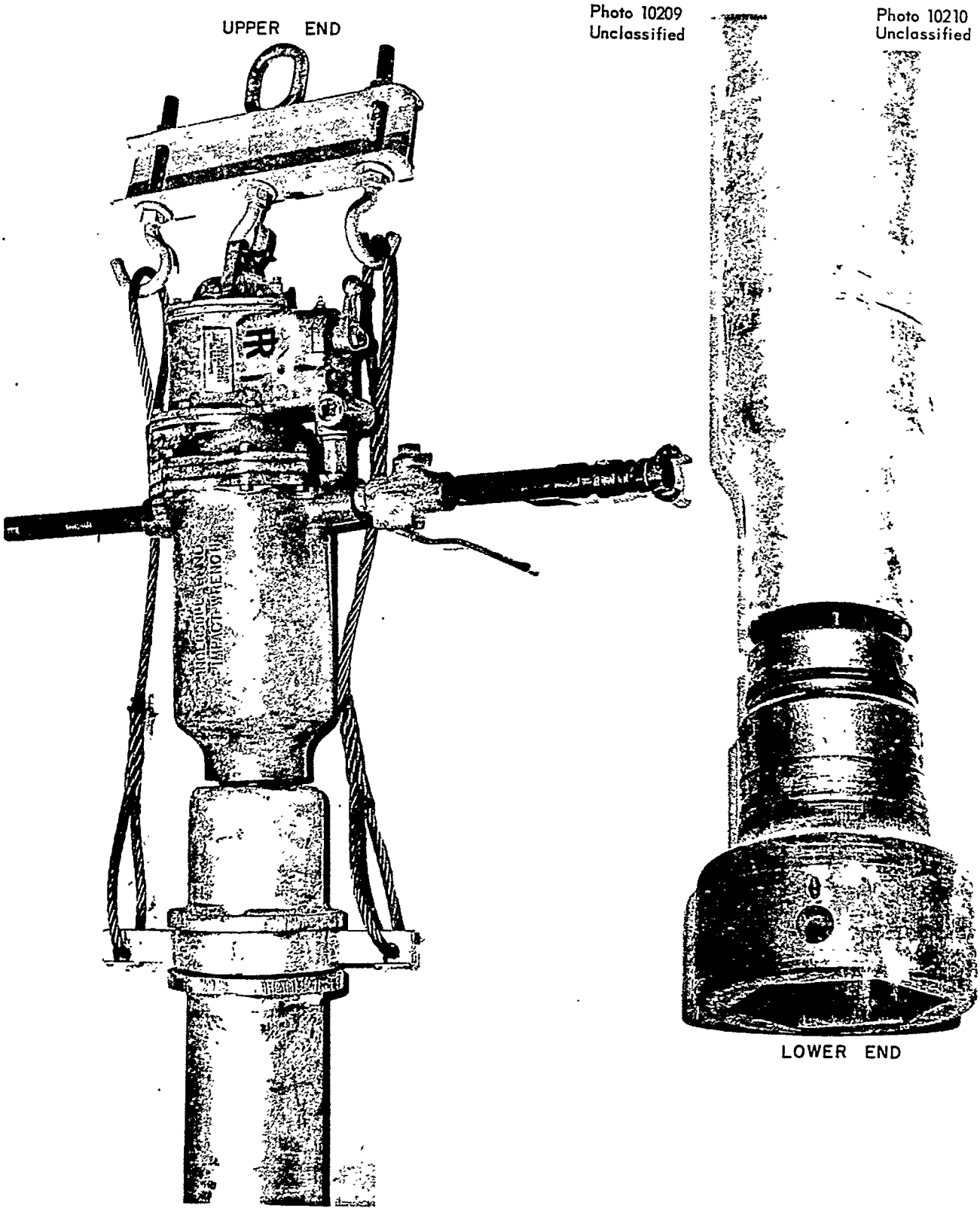

Fig. 2.10C. Large Air Impact Wrench and Extension

Dwg. 16220
Unclassified

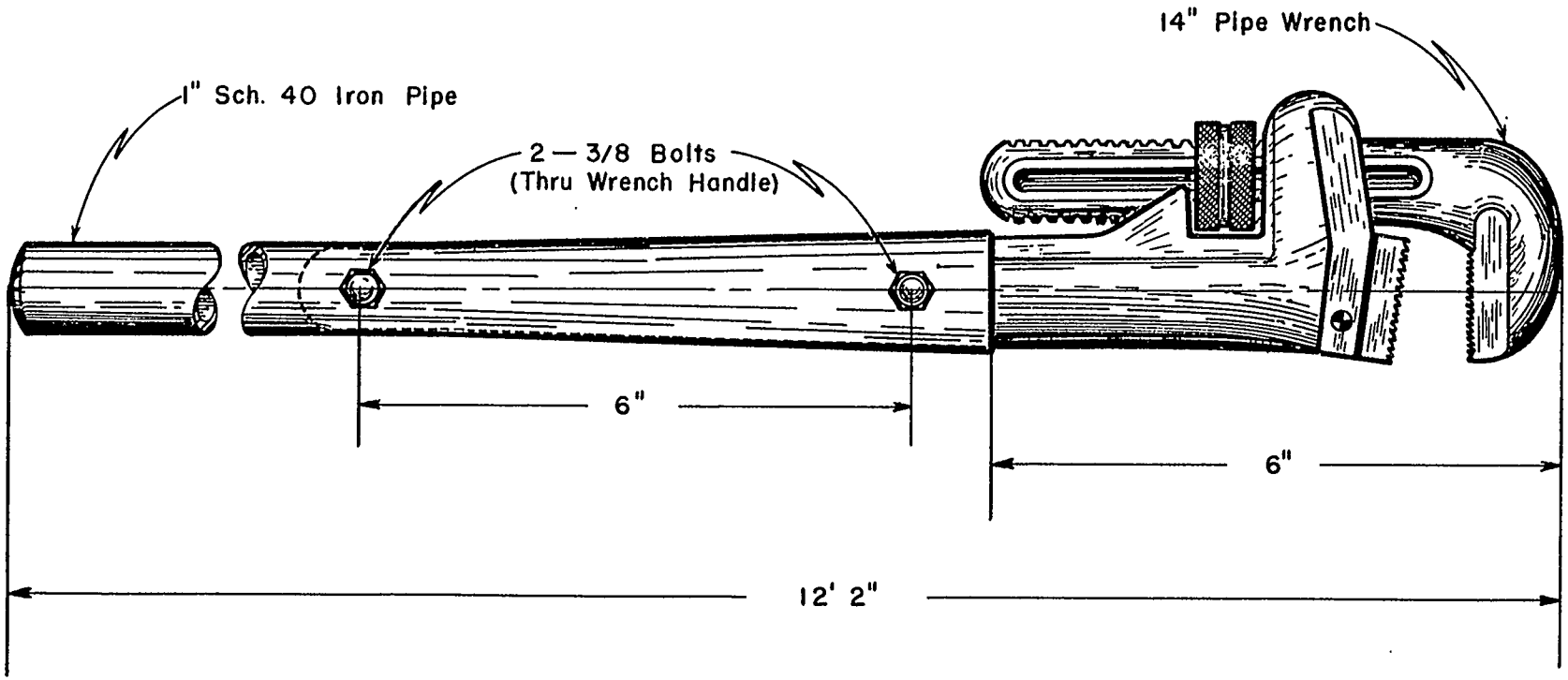

Fig. 2.10D. Extension Handle Pipe Wrench For Uncoupling Soup Circulating Pump Oil Line — Two Needed.

Dwg. 16221
Unclassified

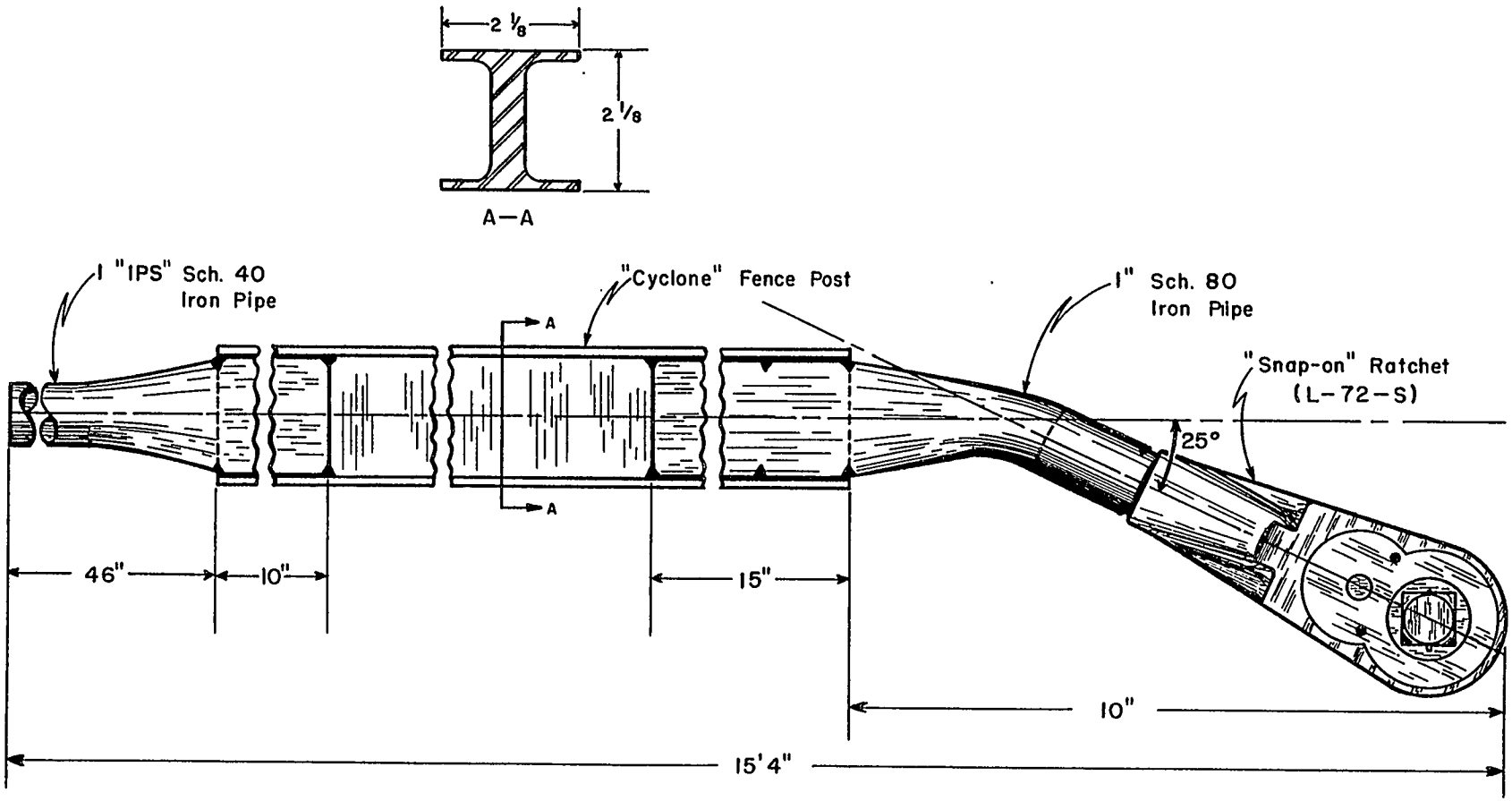

Fig. 2.10E. Angle-Ratchet Wrench (18° Arc Motion) Used on Bolts on 1 1/2 IPS Flanges in Heat Exchanger And Reactor Cells — Two Each

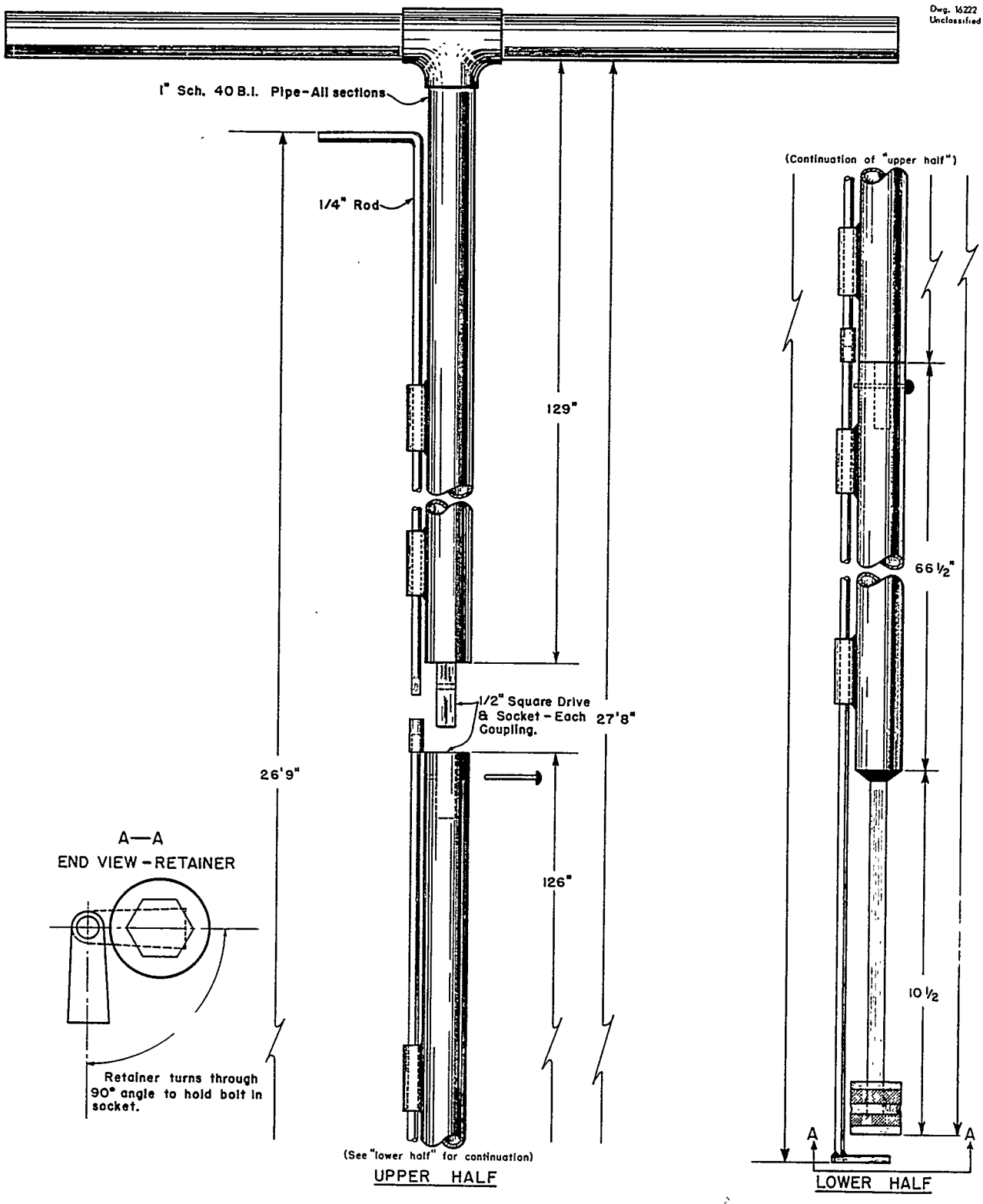

Fig. 2.10 F Socket Wrench and Extensions

Certain items are now known to have short operating lives, principally the soup pulsafeeder water-to-soup head diaphragms. This complete unit has been unbolted remotely and removed from the soup cell pit, while working from the top of the shield, but not behind mock shielding or by use of mirrors. The soup circulating pump has had all necessary piping flanges unbolted easily except for two bolts located under the discharge flange. These require a specially designed wrench due to the small clearance between the bolt and pump flange. Various ideas are being investigated to provide a simple wrench which may be used remotely.

Flanges in horizontal runs of pipe are difficult to unbolt since the pipe prevents rotation of the wrench. An air impact wrench is too bulky to enter confined spaces if it is large enough to provide proper bolting torque, even if an angle drive is built into the wrench. Flanges in vertical runs of pipe, where flanges are properly oriented during welding, provide access for commercial sockets and may be unbolted at a distance of 25 ft. above the flange with long extensions; this was demonstrated in the case of the soup pulsafeeder water-to-soup head assembly (Dwg. D-9590). See sketch of wrench, Figure 2.10F.

Remote flange ring joint gasket replacement is being studied but has not been demonstrated as yet. The bolts on the flange of the D_2O pressure vessel have been tightened and loosened from the top of the shield by means of the Ingersoll Rand Air Impact Wrench, Model 588 x 3 x 8" socket used with a 12' 6" long socket extension (See Figure 2.10C). This operation was not accomplished thru shielding or by means of mirrors from behind mock shielding.

An extension wrench (similar to that provided for unbolting the D_2O flange) has been provided for loosening the blind flanges atop the three rod housings on the D_2O vessel flange, in conjunction with an air impact wrench. A plaited, 5/8" diameter cable sling has been attached to the main heat exchanger at its balance point, and has been used to lower the heat exchanger into position. There is little clearance at the east end of the cell wall due to insulation on the shell of the heat exchanger, and therefore flange mating is difficult.

The D_2O cell radiation intensity should be low enough, due to 2 ft. of boron barytes concrete and 3 ft. of barytes concrete between the soup cell and reactor cells, to permit direct entry of personnel to accomplish removal of items safely within Health Physics working tolerances. Remote removal of rupture discs from the special flanges has not been accomplished but is being studied. The removal of a section of pipe from within the shield by sawing and cutting remotely, and the subsequent rewelding remotely, is considered to be too difficult to warrant study at this time. It may be possible to solve this problem, but it does not seem feasible with our present knowledge and techniques.

Experience on radiation levels reached in the soup cell and heat exchanger cell may show that entry by craftsmen can be made if lead shielding is utilized to shield the items giving off objectionable amounts. In this manner the cells may be compartmentalized temporarily to provide sufficient working time for several craftsmen to obtain Health Physics allowable doses, thereby completing a repair. Thus far no usable idea has been developed for providing remote removal of stacked block within the mortared walls of the reactor. Again, this problem is being studied toward an eventual solution.

2.11 Auxiliary Supporting Systems to Reactor and Turbo-Generator

Components of the reactor and turbo-generator group which require auxiliary services are outlined as follows:

a. Steam

Steam warm-up
Soup, D_2O and Waste Evaporators
Soup Off-Gas Cooling
Catalytic Recombiners. Drying and Cooling.
Outer Dump Tank Evaporation

b. Electric Power

Reactor process pumps
Pressurizer and auxiliary warm-up boilers
Turbo-generator steam system pumps
Refrigeration compressor
Shield exhaust fan
Instrumentation and control
Lighting

c. Water

Reactor process condensers
Process, pump and control rod cooling
Turbo-generator steam system condenser and oil cooler

Each of the above three systems is described in greater detail under appropriate sub-titles to this section.

2.11.1 Process Steam System

A process steam system is required to supply steam to components of the reactor, as well as for warm-up of the turbine and associated equipment.

A 6 inch pipe line from the X-10 steam plant delivers 250 lbs. steam to the building. A 4 inch branch from the main brings the steam into the building. Two 250 pound steam boilers of 30 and 50 HP respectively are provided as standby.

A 2-1/2 inch line delivers 250 pound steam to the turbo-generator group for warm-up.

One hundred pound steam is supplied to the reactor from a pressure reducing station located in the boiler room.

Pressure reducing stations on the east face of the shield furnish steam at required pressures to the following items:

a. Soup Evaporator (Item 9) and Outer Dump Tanks (Items 64a and 64b). Fifty-five - sixty pounds from a common reducer.

b. D_2O Evaporator (Item 24) 15-30 pounds.

c. Steamers (Items 93a and 93b) 5-10 pounds from individual reducers.

The soup Catalytic Recombiner (Item 88) uses 100 pound steam from the header at the east face.

The Hi-Pressure Catalytic Recombiner uses two hundred and fifty pound steam which enters the shield at the east face.

The D_2O Catalytic Recombiner uses one hundred pound steam.

The 100 pound main, which supplies the reactor, also delivers steam to the waste evaporator.

The condensate is normally drained to the waste system, however, when the stand-by boilers are used, it is pumped back to the boiler room.

Line 316, carrying warm-up steam to the turbo-generator, is controlled by a manually operated air valve, and other supply lines are provided with hand operated valves.

Yarway Company traps are provided in all condensate lines.

REFERENCE DRAWINGS:

D-7012 - Service Piping
D-7715 - Boiler Room Piping
D-8910 - Service Piping Plan

2.11.2 Electrical Power and Light System

The electric power supply for the 7500 building and all associated equipment is a 13.2 KV transmission line originating at the 154/13.2 KV sub-station, north of the X-10 area. This transmission line terminates at the transformer rack outside and south of the 7500 building.

The following services are delivered to the building from the transformer rack:

1. 440 volt, 3 phase, delta. Considering the reactor and turbo-generator only, the sole user of this service is the 40 Kw boiler, item 62.

2. 120/208 volt wye, 3 phase, 4 wire. This service feeds all lighting and all other electric power consuming components of the reactor and turbo-generator. Excepting, of course, the aforementioned 40 Kw boiler and also certain instrumentation, but including the stack fan (Item 73) and the soup off-gas vacuum pump (Item 17).

3. 120 volt, single phase. This service, regulated by constant voltage transformers, supplies the more exact instrumentation needs.

The 120/208 volt feeder is inter-connected to allow the turbo-generator to take over the load when desired. These breakers are controlled from the operating room.

The push button stations for control of all electrical components of the reactor and turbo-generator are also located on the panel in the operating room.

Lighting inside the shield is controlled by switches on the north face of the shield.

The service room (in south portion of the building) contains the following electrical equipment: Watt-hour meter; main distribution panels and breakers; generator load connecting breakers; building lighting panel; receptacle circuit trips; building utility panel.

All starters and contactors for the reactor and turbo-generator auxiliaries are located in the operating room.

Emergency lighting is provided in the service and operating rooms. This is done by means of an arrangement of battery powered flood lights floating on the line with automatic switching in case of building power failure.

Electric Power Consuming Components of Reactor and Turbo-Generator Group

Item No.	Name	Voltage	Maximum Amps	Kw	Speed-RPM
4	Soup Circulating Pump	220	45	13.8	3400
5	Soup Circulating Cooling Oil Pump	220	2.5	0.745	1740
6	Soup Pulsafeeder Drive	220	13.7	3.73	1155
17	Soup Off-Gas Vacuum Pump	220	13.7	3.73	1800
19	D_2O Circulating Pump	220	20	4.3	3200
21	D_2O Circulating Pump Cooling Oil Pump	220	2.0	0.558	1740
26	D_2O Pulsafeeder Drive	220	13.7	3.73	1155
43	Hot Well Pump	210	4.6	1.12	3450
45	B. F. Water Piston Pump	210	13.7	3.73	1735
62	40 Kw Boiler	440	120	44.4	
63	10 Kw Boiler	210	28	10.0	
65	B. F. Water Turbine Pump	208	14.4	3.73	1750
67	Condenser Vacuum Pump	208	13.7	3.73	1735
73	Stack Fan	220	9.0	2.24	1740
85	Refrigerant Compressor	220	8.6	2.24	1755
92	Soup Circulating Pump Purge Pump	110	4.0	0.25	1725

REFERENCE DRAWINGS:

D-7025 - South Section of 13.2 KV Transmission Line
D-7028 - Transformer Step-down Station
D-7527 - North Section of 13.2 KV Transmission Line
D-7701 - Power Details and Elevation
D-8921 - Under floor Conduit Plan
D-8922 - Power Plan
D-8924 - Wiring Diagrams
D-8925 - Equipment Schedule

2.11.3 Process Water System

Calculation indicates that operation of the reactor and associated turbo-generator requires 710 gallons per minute of cooling water. Possibility of contamination considered, a separate or process water system is provided. Isolation of the process water from the potable water is achieved by insertion of an atmosphere vented hold-up tank. A branch of the 12 inch supply line from the Laboratory water system empties into this tank. In turn the process water main leads from the tank to the builidng. The hold-up tank is located on a natural ridge about 120 feet above grade at building and approximately 900 feet north of same.

At the main valve in the boiler room of the 7500 building, this system will deliver 800 GPM at 45 psi. The process water distribution net breaks down as follows:

1. A 6 inch line rising from the main valve in the boiler room to the pipe rack on the south wall of the building. This line continues east on the rack for a distance of 2 bays or to column D-3. Here it reduces from 6 inch to 2 inch.

2. The first branch of the main is a 4 inch line teed off the riser at the west wall of the building. This line (446) runs north along the said west wall and drops down at the turbo-generator location to supply the turbine oil cooler (item 40) and the main condenser (item 42).

3. From column D-3 where the main reduces from 6 to 2 inch pipe, said main continues east on pipe rack. At the east wall the line bends north to columns C-7, whence it drops below grade and then out into the yard. Off the southwest corner of the evaporator a stop and drain valve is provided for the main. Drain is to the main waste line.

4. A 2 inch line tees off the main at column D-5. This line drops below grade and runs north to supply the reactor proper.

5. This 2 inch supply line tees into an east-west line, the west end of which reduces to a 1 inch line (475) supplying the soup pump oil cooler (item 5).

6. The easterly portion of the above mentioned east-west line continues as a 2 inch line. This line runs east to a point east of the pump pits, thence north to a point north of the valve pit. At this point it branches west as a 1-1/2 inch line to the east face of the shield.

7. At the point of the branch to the east face of the shield the 2 inch supply line reduces to 1 inch and continues north and then west to a point off the north face of the shield.

8. In the yard east of the building a 3/4 inch line branches off the 2 inch line running below grade. This 3/4 inch line leads north and east [redacted] a point off the east end of the septic tank. The purpose of this line is to supply a future chlorination station. Demand for same being less than 1 gallon per hour, this is not considered in the accompanying table.

The two branch lines described under (6) and (7) above, rise as a header on the east and north faces of the shield respectively. Items 7, 13, 14, 15 and 47 are supplied from the east face header. Items 21, 28 and 86 are supplied from the north face header.

Process water lines from equipment within the shield are provided with sight drains or equivalent. Should the water supply to the main hold-up or system separation tank fail, there is sufficient capacity in the tank and the main therefrom to provide 7 to 8 minutes of flow at required volume. This time should allow necessary emergency procedure to be followed.

HRE PROCESS WATER REQUIREMENTS

Item No.	Equipment	Max. GPM Req'd	Location
5	Soup Pump Oil Cooler	20	Shield (S. of H.E. Cell)
7	Soup Cooler	10	Soup Cell
13	Flame Recombiner	20	Soup Cell
14	Soup Gas Condenser	10	Soup Cell
15	Soup Off-Gas Condenser	10	Soup Cell
21	D_2O Pump Oil Cooler	10	East Face of Shield
28	D_2O Gas Condenser	10	D_2O Cell
40	Steam Turbine Oil Cooler	35	Steam Turbine
42	Steam Turbine Condenser	575	Steam Turbine Group
47	Control Rod Cooling Jacket	5	Reflector Vessel Cell
86	D_2O Off-Gas Condenser	5	D_2O Cell
	Total Maximum Demand	710 GPM	
	Plus Contingency Allowance of	90 GPM	
	Calculation Base	800 GPM	

REFERENCE DRAWINGS FOR THIS SECTION

D-7012	Service Piping
D-7021	Portable and Process Water Lines
D-7711	Outside Underground Services
D-8628	Reflector Cell Piping
D-8630	Heat Exchanger Cell Piping
D-8638	Piping and Equipment on Shield Face, North Elevation
D-8647	Turbo-Generator Equipment and Piping
D-8910	Service Piping Plan
D-9054	Piping and Equipment on Shield Face, East Elevation
D-9595	Reflector Vessel Cell, Piping

2.12 The Waste Recovery System

2.12.1 General Discussion

In event of a ruptured pipe or equipment item in the high pressure fuel solution system, the spilled material will collect in the bottom of the shield. To provide for this occurrence, the walls of the individual shield compartment cells containing items and/or pipes conducting the solution are lined with an impervious compound to prevent material from entering the concrete block. The surfaces of the concrete in the compartments are first coated with a metallic aggregate cement (Master Builders Endeco No. 5) after which three coats of a synthetic rubber compound are applied. (One coat of Neabon primer and two coats of Neabon finisher procured from Atlas Mineral Products Company.) Material which sprays on these surfaces may subsequently be washed down and collected. The poured concrete base of the inner shield is lined with stainless steel sheet to collect these washings.

After a reactor shutdown, it may be desirable to transfer the fuel solution from the inner dump tanks to the outer dump tanks for the purpose of maintenance of equipment in the shield. A certain amount of radioactive solution will adhere to the inner surfaces of the fuel solution system equipment and constitute a menace to the safety of workmen. Hence, the system must be decontaminated. Provision has, therefore, been made to flush the system with decontamination solutions. The solutions which are injected in the decontamination fill fitting in Line 131 of Figure 2.2.1A ultimately collect in the inner dump tanks. By closing valve 113 and opening valves 113A, 120A and 120B of Fig. 2.2.1A, this material may be allowed to flow out of the system to the stainless steel sump in the shield bottom and hence to the waste evaporator through a 2 inch IPS stainless steel pipe.

2.12.2 Waste Evaporator

In the process of decontaminating the system it will be necessary to collect and safely handle a large volume of radioactive solution: Obviously it is not practical to store the entire bulk of solution; but the water content may be evaporated out leaving a smaller volume of concentrated solution which may be collected in a shielded storage tank and periodically drained to a shielded carrier for disposal. This process is carried out in the waste evaporator which includes the following equipment:

a. Evaporator - The evaporator is fabricated from Type 347 stainless steel, #1 finish, as shown on drawing D-7585 and is of all-welded construction.

b. Evaporator Steam Coil - The evaporator steam coil is fabricated from type 309 Scb., schedule 40 stainless steel pipe and fittings, as shown on drawing D-7586. The coil is pickled and passivated on both the internal and external surfaces. Two coils are used, consisting of 11 turns of 3/4 inch IPS pipe on a 12 inch pitch diameter inside of 11 turns of an outer coil wound on a 16 inch pitch diameter. The total outside evaporative surface area of the coils is 22.6 square feet.

c. Evaporator Feed Tank - The evaporator feed tank is fabricated from type 347 stainless steel all-welded construction as specified on drawings D-7587 and D-7588. The tank is a horizontally mounted right circular cylinder of 4'-6" diameter by 9'-0" length capable of holding 1070 gallons of solution.

d. Condenser Catch Tank - The condenser catch tank is fabricated from a stainless steel, type 304, 50 gallon drum as specified on drawing D-7579.

e. Samplers - Samplers are fabricated from type 347 stainless steel as specified on drawings D-7582, D-7590, D-7591 and D-7592.

f. Evaporator Condenser - This condenser is a modification of an existing condenser secured from stock as shown on drawing D-7583.

g. Evaporator Piping - All process and instrument piping and drain lines are schedule 40, type 347 stainless steel pipe with type 347 stainless steel welding fittings.

h. Evaporator Shielding - The evaporator equipment items are housed in a concrete structure with 3'-0" thick walls to shield from the radioactive solution.

2.13 The Decontamination System

PURPOSE:

Development of a satisfactory process for decontaminating those parts of the HRE that have been in contact with uranyl sulfate solution under irradiation is of obvious importance. It must be possible to remove all adsorbed fission products, uranium, and surface films without seriously corroding the basic stainless steel structure if the HRE is to be of practical use over an extended period of time.

DESCRIPTION:

A decontamination fill fitting is provided in Line 131 as shown on Figure 2.2.1A. This fitting is available from the top of the shield and is isolated from the system by means of two valves. A remotely controlled, air operated valve is installed in Line 131 inside of the shielding structure and is the first of the two isolation valves; the second valve is located outside of the shield and is manually operated. The decontamination fluid injected into Line 131 flows by gravity to a tee-fitting welded into Line 114 and hence to the remainder of the high pressure and low pressure fuel solution systems. Ultimately, the decontamination solution collects in the inner dump tanks and by proper manipulation of the valves in lines 113 and 120, the contaminated fluid may be allowed to flow out of the system to the stainless steel sump in the bottom of the shield and, hence, to the waste evaporator for recovery of the fission products and uranium.

Decontamination of Irradiated Type 347 Stainless Steel. Through the cooperation of the Chemical Technology Division, a very promising decontamination process has been developed. This process required exposure for one hour at 25°C to an aqueous solution of 20% HNO_3 and a 3% HF (both by weight), with minimal agitation to avoid stagnation of the liquid. The corrosion rate for Type 347 stainless steel is 0.037 mils per hour.

An experiment demonstrating this process was carried out with a Type 347 stainless steel bomb loaded with a 40 g of uranium per liter solution of UO_2SO_4 in water. The bomb and solution was exposed to the X-10 graphite pile flux for 12 days at which time the bomb was removed and rinsed with distilled water. The recommended solution and decontamination procedure is based on the results of this experiment, which are tabulated in ORNL-1221 (Homogeneous Reactor Project Quarterly Progress Report for period ending November 15, 1951). From inspection of these results, it is noted that the decontamination process is essentially complete after one hour. Mild agitation is considered necessary with respect to pretreated surfaces. Additional information on the decontaminatinn of stainless steel surfaces is available in ORNL-381 (Radioactive Decontamination Properties of Laboratory Surfaces - Glass, Stainless Steel and Lead by P. C. Tomkins and O. M. Bizzell).

CHAPTER 3

THE HRE SHIELD DESIGN

3.1 Purpose of the HRE Shield

The biological shield for the HRE is designed to accomplish the following:

a. Reduce to instrument tolerance all radiations emanating from the reactor and auxiliary equipment.

b. Compartmentalize equipment within the shield to improve accessibility for maintenance or replacement.

Preliminary estimates of the shield thickness indicate that seven feet of high density concrete is adequate to serve function (a) for the reactor tank itself, with somewhat lesser thickness required for external components of the reactor. It is also estimated that approximately one foot of high-density concrete is adequate protection against induced activity in any of the component items of equipment after shutdown, provided the equipment is completely drained and decontaminated. Thus, function (b) will be served.

3.2 General Description of Shielding Structure

The general design of the shielding structure is illustrated by Fig. 3.2A. The problem of shielding the HRE differs from that of shielding a heterogeneous reactor in that there are sources of neutrons other than in the reactor proper. These extra neutrons result from fission fragments circulated in the external system with the soup. Therefore, extreme care must be observed in the placement of the external piping and equipment items to avoid excessive radiation dosage at the shield surface.

The HRE was conceived primarily as an experiment, hence, equipment items must be placed for accessibility. This accessibility requirement attaches importance to the induced activity of the external hydraulic system and of the shield itself, therefore, it is desirable that the activity after shutdown be of sufficiently low level to permit human access.

From these considerations it is obvious that the external soup system components must be placed in a compromise position which is far enough removed from the outside of the shield to attenuate the radiations to a tolerable level, and yet removed from the reactor itself a sufficient distance such that the induced activity resulting from thermal shield flux is at a safe value. Figure 3.2A shows how such a compromise arrangement is achieved. The reactor pressure vessel

DWG. NO. 12056

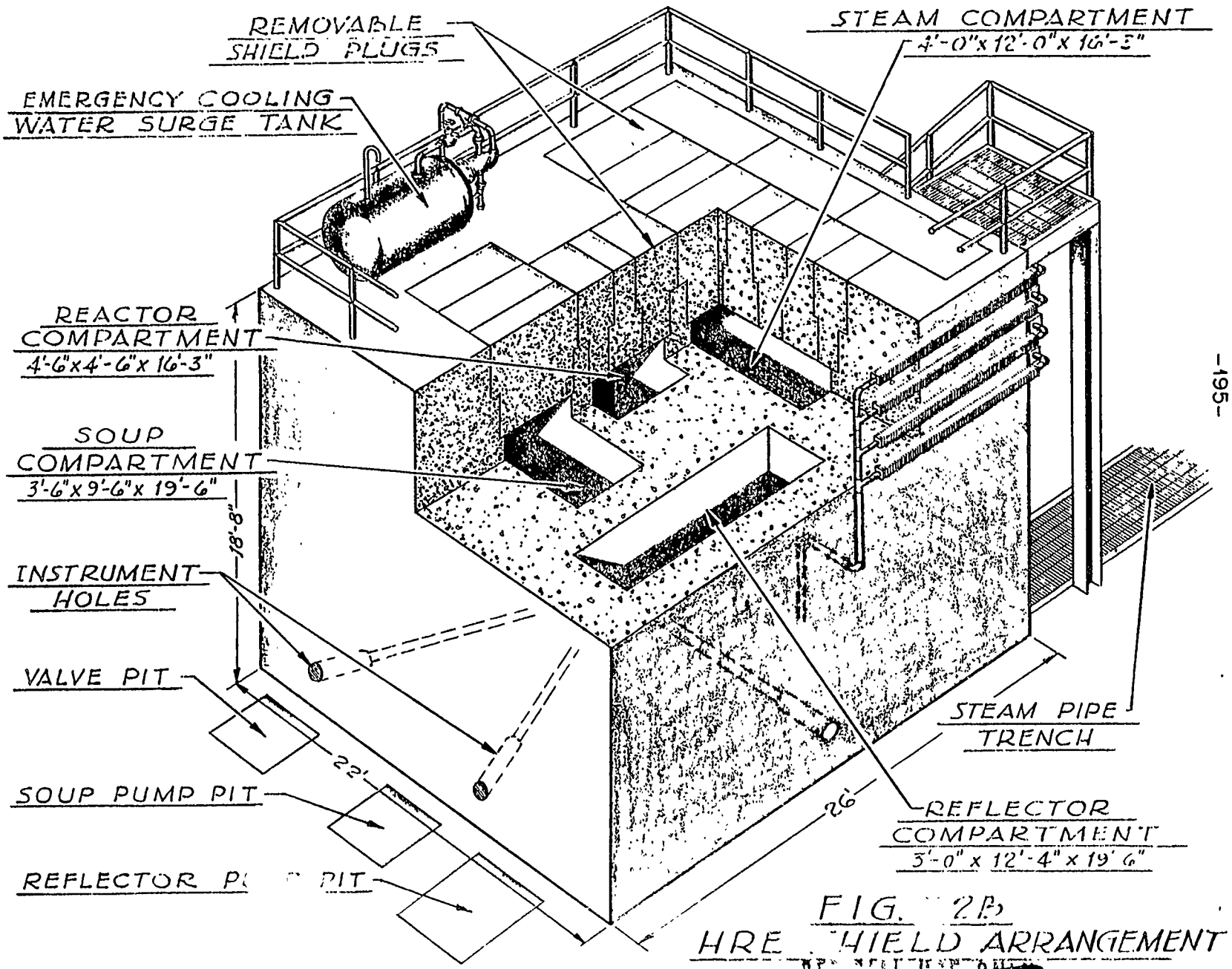

FIG. 2B
HRE SHIELD ARRANGEMENT

is located in a central compartment with a compartment each for the soup processing equipment, the reflector items and the main heat exchanger or steam compartment on the east, north and west sides of the shield respectively. Each compartment is sized to be compatible with the equipment it is to contain, and each compartment has at least five feet of concrete between it and the outside face of the shield (except for the reflector compartment which has 2 ft). A total of seven feet of high-density concrete thus shields the reactor with two feet between the reactor and any cell.

From Fig. 3.2B it may be observed that access to all interior parts of the shield is from above, except for the instrument tubes. The shield is constructed primarily from high-density concrete blocks with the outer two courses being mortared in place and the inner ones stacked. This construction permits erection of the supporting structures and the mounting of certain of the reactor components before proceeding with the shield, and thus facilitates erection of the reactor by avoiding the necessity of having to lift items over the shield wall. The removable top plugs are of precast concrete.

In order to reduce induced activity in the shield itself, the inner three feet of concrete around the reactor contains colemanite ore in sufficient quantity to add at least 1% of boron by weight to the concrete block aggregate.

3.3 Concrete Block Specifications

a. Size of block - 4 x 8 x 12 in.
b. Density of block - 0.130 lb/in^3 (3.6 gm/cm^3)
c. Weight of block - 50 lb.
d. Strength of concrete - 3000 lb/in^2 compressive str. after 28 days
e. Thickness of mortared joints - 3/8 in.
f. Analysis of concrete

Portland cement	1 part by weight
Barytes aggregate, fine	3.4 parts by weight
Barytes aggregate, large	4.5 parts by weight
Water-cement ratio	5-1/2 gals/bag of cement

g. Inner 3 ft. of concrete surrounding reactor shall have 1% by weight of boron added in the form of Colemanite ore.

3.4 Radiation Sources

Table 3.4A - Absolute Values of Neutron Flux from the HRE Reactor Core

	Thermal Flux	Fast Flux
Core (maximum)	3.37×10^{13}	6.39×10^{13}
Core (average)	1.88×10^{13}	3.69×10^{13}
Inside surface of pressure vessel	0.07×10^{13}	0.04×10^{13}
Core tank	0.92×10^{13}	2.25×10^{13}
*Shield inside surface	0	2.0×10^{11}

*Neutron currents into shield.

TABLE 3.4B

The HRE Core as a Source of Gammas

Power 1000 Kw

Fissions/sec 3×10^{16}

Gammas generated in the core:

Energy (Mev)	Number	Source
1	15×10^{16} photons/sec	Fission
*2	1.2×10^{16} photons/sec	H_2O capture
2.5	6×10^{16} photons/sec	Fission products
6	0.6×10^{16} photons/sec	U^{235} capture

*Combine - Call 2 Mev gammas as 7.2×10^{16} photons/sec

	1 Mev.	2 Mev.	6 Mev.	8 Mev.
Fission and capture source photons/sec	15×10^{16}	7.2×10^{16}	0.6×10^{16}	
Current interface core reflector photons/cm^2 sec	1×10^{13}	0.6×10^{13}	0.6×10^{12}	
Current interface reflector pressure vessel photons/cm^2 sec	4×10^{11}	4×10^{11}	7×10^{10}	
Current interface pressure vessel shield photons/cm^2 sec	1.3×10^{10}	3.4×10^{10}	1.3×10^{10}	
Current secondary gamma pressure vessel photons/cm^2 sec				7.3×10^{10}
Input to shield Mev/cm^2 sec	1.3×10^{10}	6.8×10^{10}	7.8×10^{10}	58.5×10^{10}
Input to shield R/hr.	2.5×10^{4}	1.3×10^{5}	1.5×10^{5}	1.1×10^{6}

Total gamma input to shield resulting from core

Mev/cm^2 sec 7.4×10^{11}

R/hr 1.4×10^{6}

TABLE 3.4C

Neutron and Gamma Source in the HRE External System

On the basis of a holdup of 20% in the circulating system

Fast neutrons - 0.1% of core source (delayed neutrons)

Gammas (2.5 Mev) - 20% of core source (fission products)

On the basis of piping of 11.4 cm^2 cross sectional area and a total external piping volume of 10 liters;

	Core strength	Strength per cm of pipe
Neutrons	7.5×10^{16} n/sec	8.55×10^{10} n/sec
Gammas	6×10^{16} phot/sec	1.37×10^{13} phot/sec

3.5 Estimated Radiation Dosage at Shield Surface

Two different approaches were used in arriving at the total radiation intensity at the face of the HRE shield.

a. Empirical design using data from bulk shielding experiments.

b. Comparison of the HRE with the X-10 graphite pile

From these considerations and assuming concrete of density 3.1 gms/cm^3 (the actual density is 3.6 gms/cm^3) the total calculated biological dose rate at the surface of the HRE shield is;

	mr/hr
Fast neutrons from reactor	0.1
Gammas from reactor	Negligible
Secondary gammas from shield	1.0
Fast neutrons from soup circulating system	0.1
Gammas from soup circulating system	1.0
Total	2.2 mr/hr

Compared to a permissible total dose rate of 7.5 mr/hr it appears that there is a factor of safety of at least three in the HRE shield design.

3.6 Induced Activities in Equipment Items

Thermal neutrons absorbed in the components of the reactor and auxiliary equipment result in the formation of radioactive gamma sources, the intensity of which will directly determine the accessibility of equipment. The evaluation of the thermal-neutron absorption, the resulting gamma sources, and the biological effect of these sources is the subject of this section. The components in which induced activities have been studied are: (1) core tank (2) pressure vessel (3) soup piping (4) heat exchanger (5) soup pump and (6) shield material.

Procedure - The induced activity in any component can be expressed by the relation

$$D\ (t_e,\ t_s,\ r) = \sum_n \bar{G}_k\ (E_k,\ t_e,\ t_s)\ A_k\ (E_k)\ g(r)\ N \text{ mr/hr}$$

where $D\ (t_e,\ t_s,\ r)$ = Biological dose rate, mr/hr

$\bar{G}_k\ (E_k,\ t_e,\ t_s)$ = Gamma activity factor, mr-cm^2 sec/hr

$A_k\ (E_k)$ = Self-shielding factor

$g(r)$ = Geometric factor

N = Total neutrons absorbed per second.

t_e = exposure time in seconds.
t_s = time after shutdown in seconds
r = distance from source to observer - cm.

Neutron Sources - The production of neutrons in the reactor when operating at 1000 Kw is given in ORNL-730. These are summarized as follows:

Thermal neutron flux at core tank	0.92×10^{13} neuts/cm^2 sec
Thermal neutron current into pressure vessel	3.5×10^{11} neuts/cm^2 sec
Fast neutron current into shield	2.0×10^{11} neuts/cm^2 sec
Thermal back-current into pressure vessel	2.5×10^{9} neuts/cm^2 sec
Thermal back-current into piping	0.87×10^{8} neuts/cm^2 sec
Neutrons absorbed in heat exchanger tubes	6.72×10^{12} neuts/sec
Thermal neutron current into heat exchanger tank from the inside	1×10^{8} neuts/cm^2 sec.

Figure 3.6A shows the results of calculations for the source of fast neutrons outside the reactor due to delayed neutrons in the external soup circulating system. Figure 3.6B shows the flux in concrete due to these delayed neutrons.

Figure 3.6C shows the flux in a borated heavy concrete shield due to the reactor source.

Dwg. 9793
Unclassified

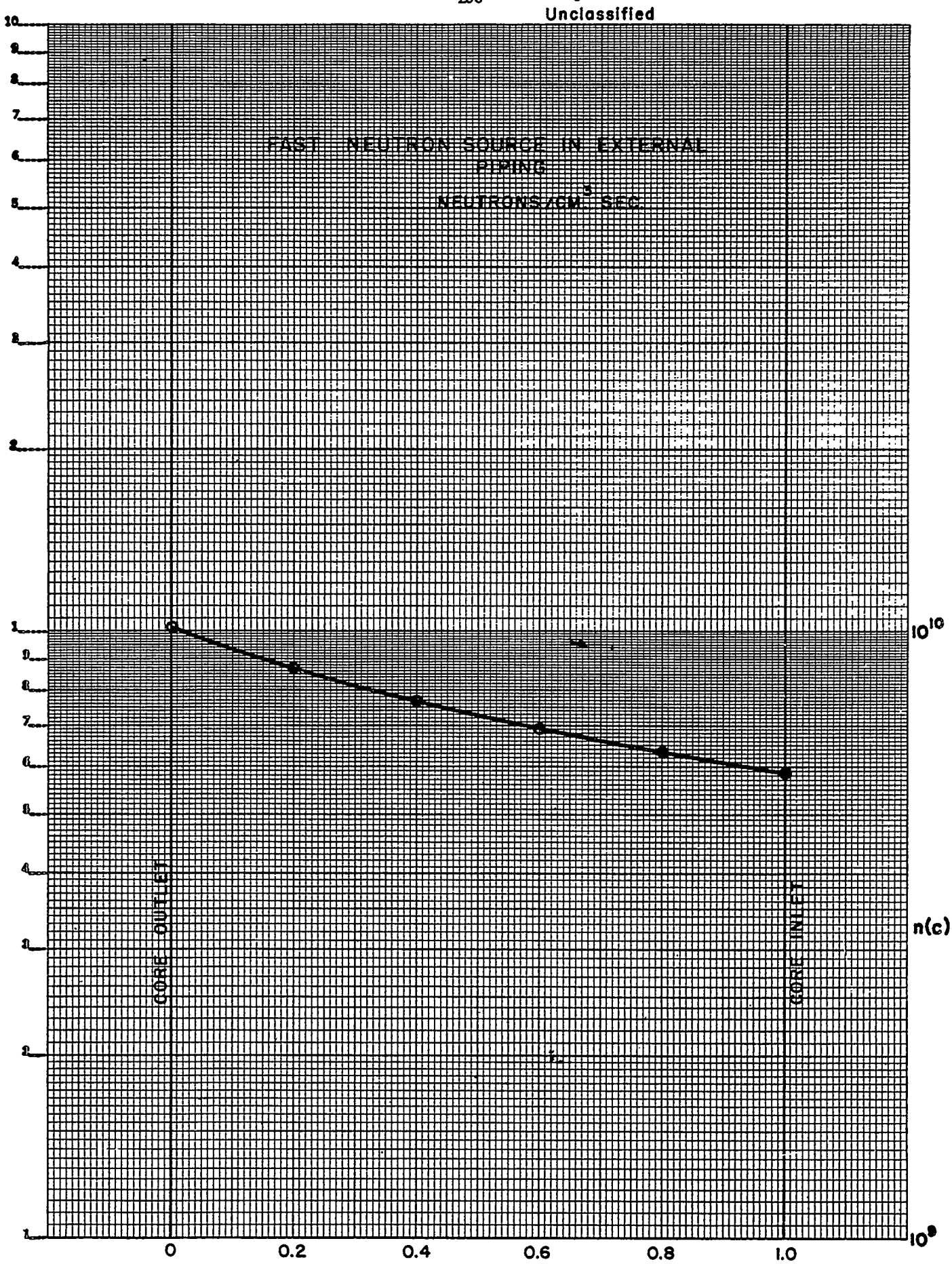

FIG. 3.6A

Dwg. 10168
Not Classified

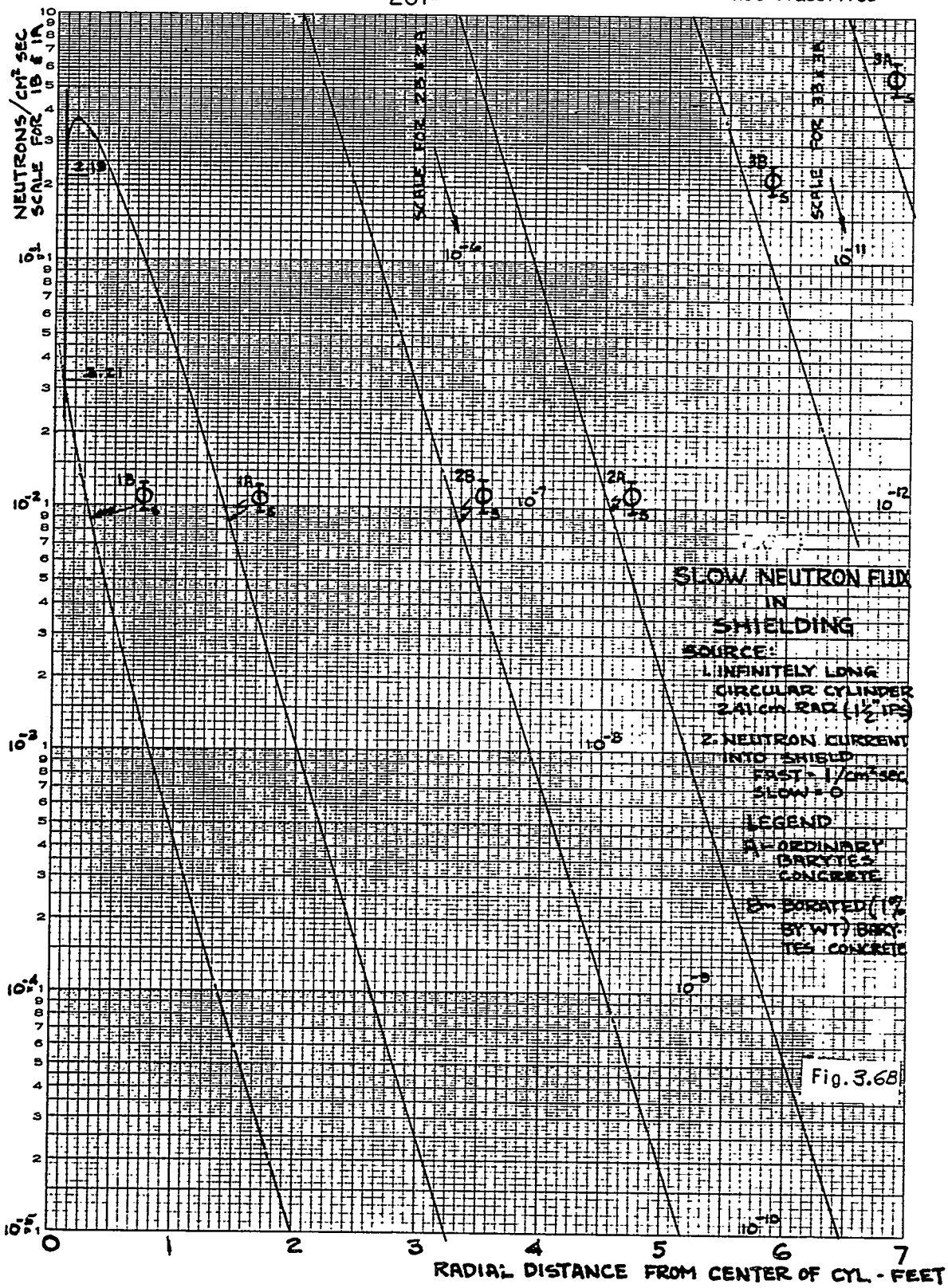

Fig. 3.68

Dwg. 9685

[redacted]

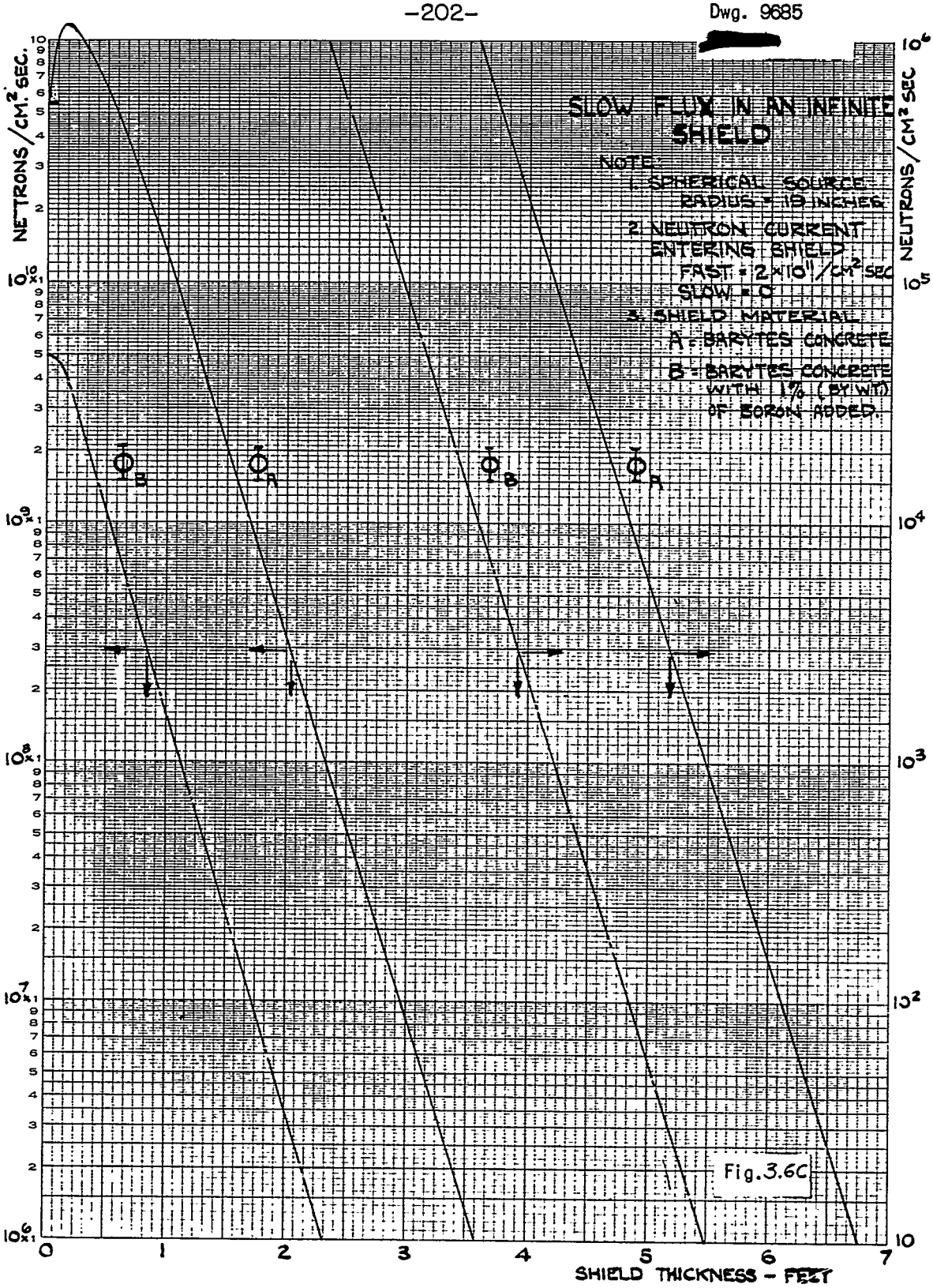

Gamma activity factors - The biological dose rate depends in part on a factor $B(E_{nk})$ which converts gamma flux in photons/cm^2 sec to mr/hr and has the units (mr cm^2 sec)/hr., and on a factor C_n (t_e, t_s) which is nondimensional and contains the time and relative absorption factors. These two quantities are combined to form a gamma activity factor, $\sum_n G_k$ for the material in question.

Figure 3.6D shows the gamma activity factors for Type 347 stainless steel.

Figure 3.6E shows the gamma activity factors for ASTM 212B and SA-105-461 carbon steels.

Figure 3.6F shows the gamma activity factors for Barytes concrete.

Geometrical factors - This factor is based on the source configuration and the distance of the point of observation from the source. If the source strength is Q photons/sec and is concentrated at a point, the gamma flux at distance r centimeters is

$$F = \frac{Q}{4\pi r^2} \qquad \text{photons/cm}^2\text{ sec.}$$

$$= g(r)\ Q$$

the geometrical factor being

$$g(r) = \frac{Q}{4\pi r^2}$$

when dealing with more complicated distributions, it is desirable to have the geometrical factor in a form for ready reference. This has been done for (1) spherical volume distribution, Figure 3.6G, (2) spherical surface distribution, Figure 3.6H, and (3) cylindrical surface distribution, Figure 3.6J.

Self-shielding factor - Since most induced activity is due to the absorption of neutrons in heavy materials, it is necessary to consider the shielding of these materials to evaluate the effective source strength. Self-shielding factors have been calculated for (1) spherical source with volume distribution as shown by Figure 3.6K, (2) thin plates or shells, gamma current on same side as neutron current, Figure 3.6L, and (3) thin plates or shells with the gamma current opposite the neutron current, Figure 3.6M. Case (2) is illustrated by the activity induced in the piping by a thermal neutron current coming from the shield. Case (3) is illustrated by the activity induced in the pressure vessel by the pile flux with the obvious point of observation outside the vessel.

Accessibility - These principles have been applied to the main components of the reactor (see ORNL-925 for detailed calculations) and the results are tabulated in Table 3.6A.

Dwg. 10167
Not Classified

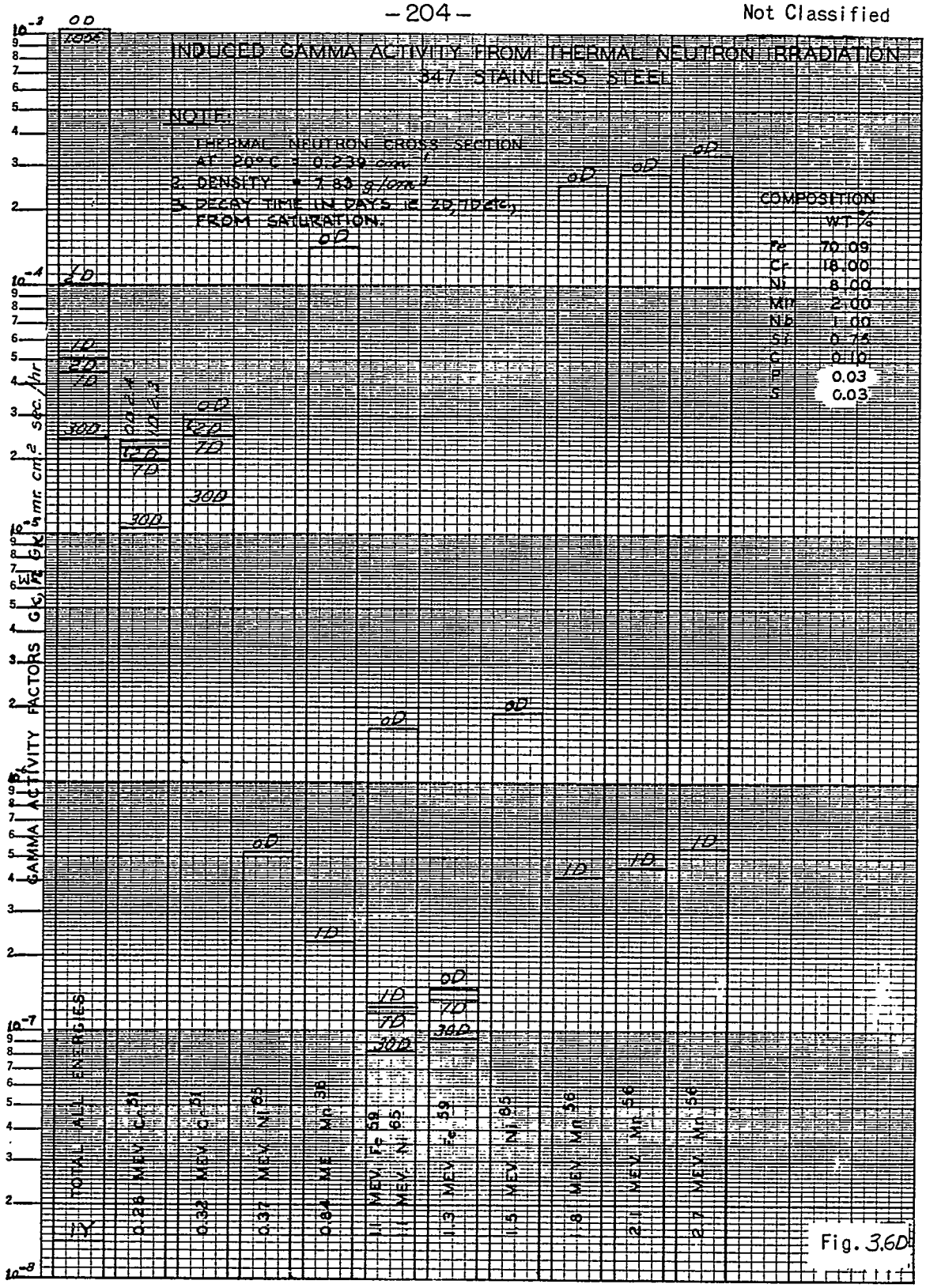

Fig. 3.6D

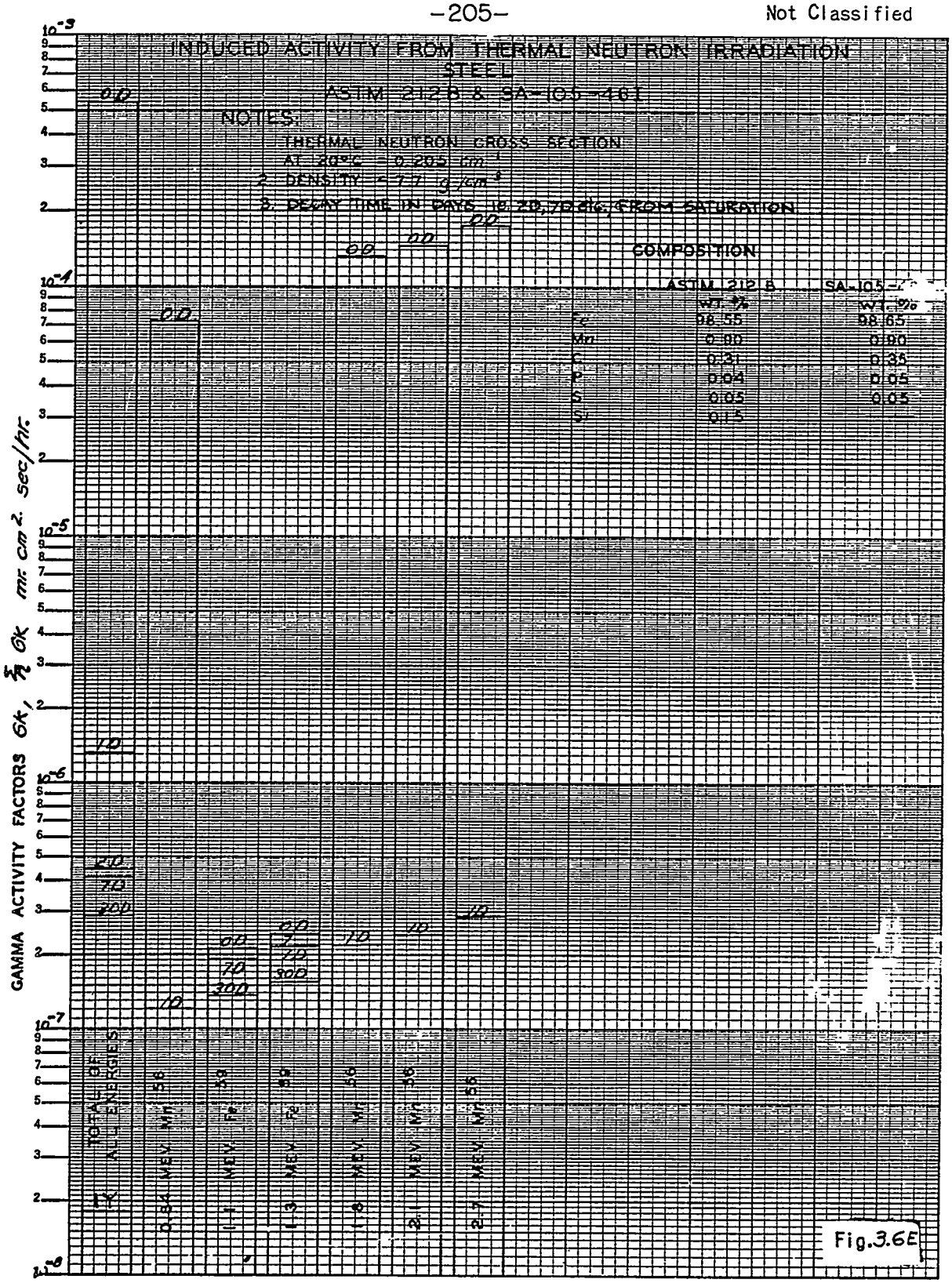
INDUCED ACTIVITY FROM THERMAL NEUTRON IRRADIATION
STEEL
ASTM 212 B & SA-105-46
NOTES:
1. THERMAL NEUTRON CROSS SECTION AT 20°C = 0.205 cm⁻¹
2. DENSITY = 7.7 g/cm³
3. DECAY TIME IN DAYS 10, 20, 70 & 300, FROM SATURATION
COMPOSITION
ASTM 212 B
SA-105
WT. %
Fe 98.55 98.65
Mn 0.90 0.90
C 0.31 0.35
P 0.04 0.05
S 0.05 0.05
Si 0.15
GAMMA ACTIVITY FACTORS Gk, Gk mr cm² sec/hr.
TOTAL OF ALL ENERGIES
0.84 MEV Mn 56
1.1 MEV Fe 59
1.3 MEV Fe 59
1.8 MEV Mn 56
2.1 MEV Mn 56
2.7 MEV Mn 56

Fig.3.6E

Dwg. 10165
Not Classified

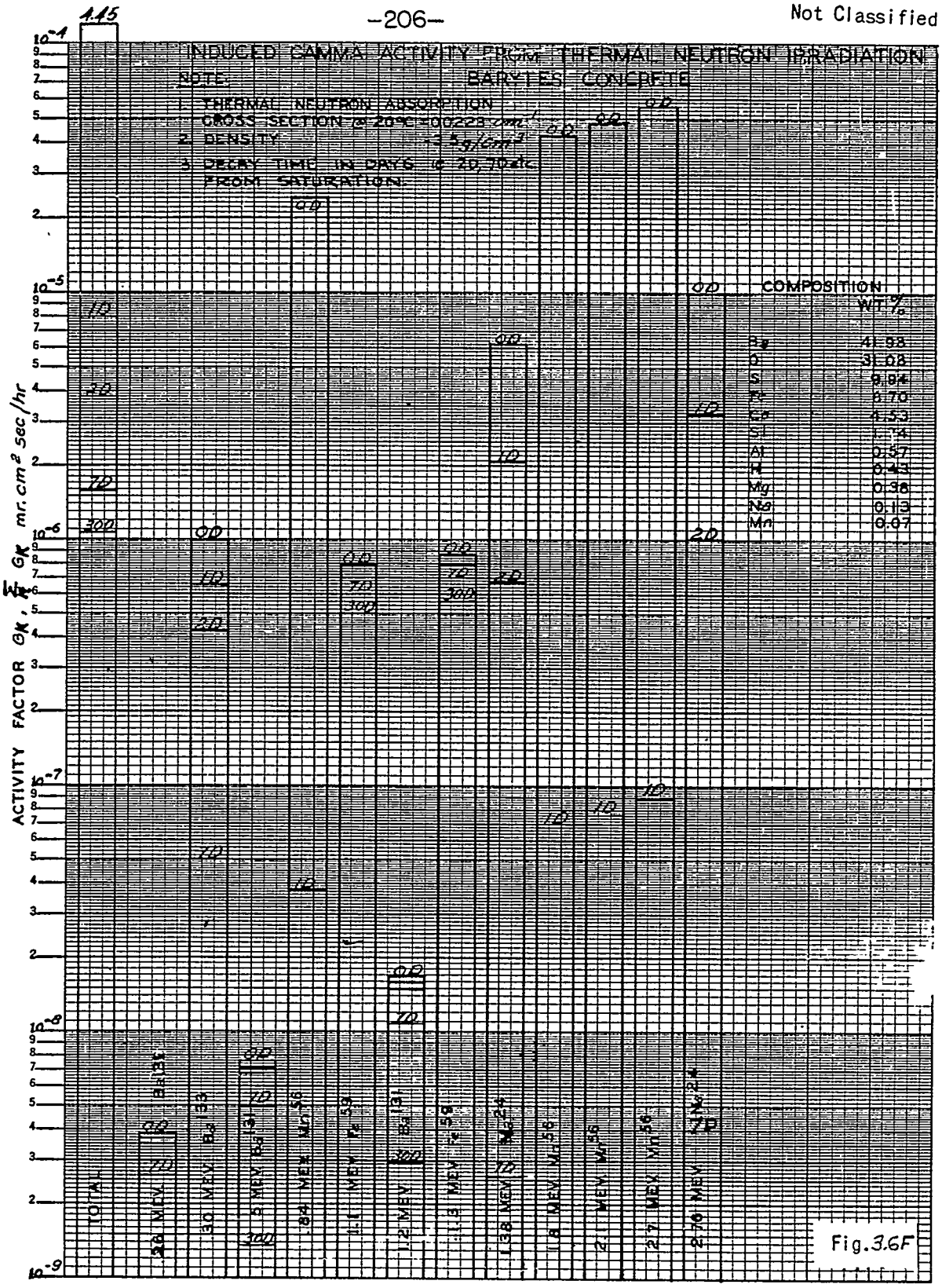

Fig. 3.6F

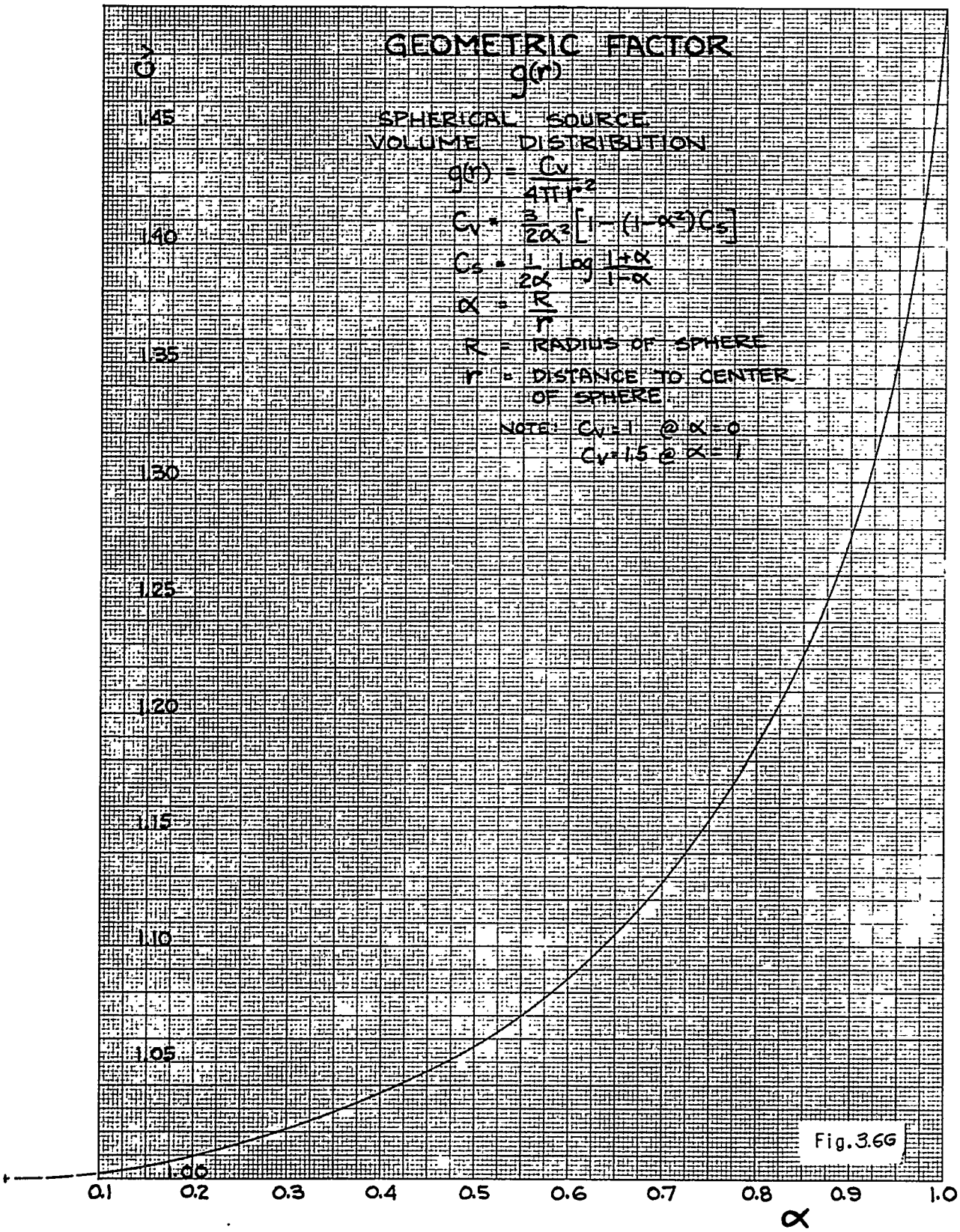
GEOMETRIC FACTOR
g(r)
SPHERICAL SOURCE
VOLUME DISTRIBUTION
$g(r) = \frac{C_V}{4\pi r^2}$
$C_V = \frac{3}{2\alpha^2}\left[1 - (1-\alpha^2)C_S\right]$
$C_S = \frac{1}{2\alpha} \log \frac{1+\alpha}{1-\alpha}$
$\alpha = \frac{R}{r}$
R = RADIUS OF SPHERE
r = DISTANCE TO CENTER OF SPHERE
NOTE: $C_V = 1$ @ $\alpha = 0$
$C_V = 1.5$ @ $\alpha = 1$
g
1.45
1.40
1.35
1.30
1.25
1.20
1.15
1.10
1.05
1.00
0.1
0.2
0.3
0.4
0.5
0.6
0.7
0.8
0.9
1.0
α

Fig. 3.6G

Dwg. 10163
Not Classified

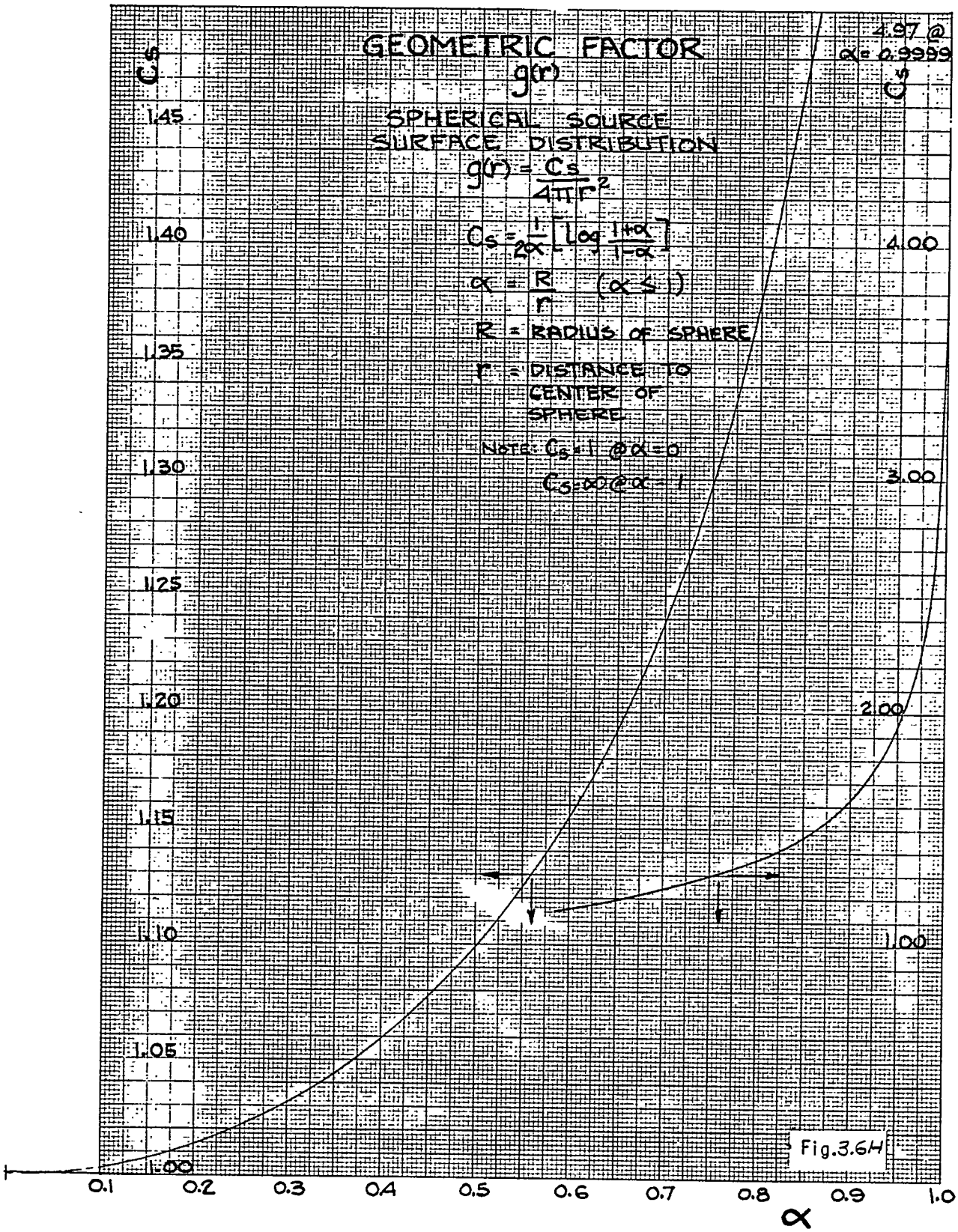

Fig.3.6H

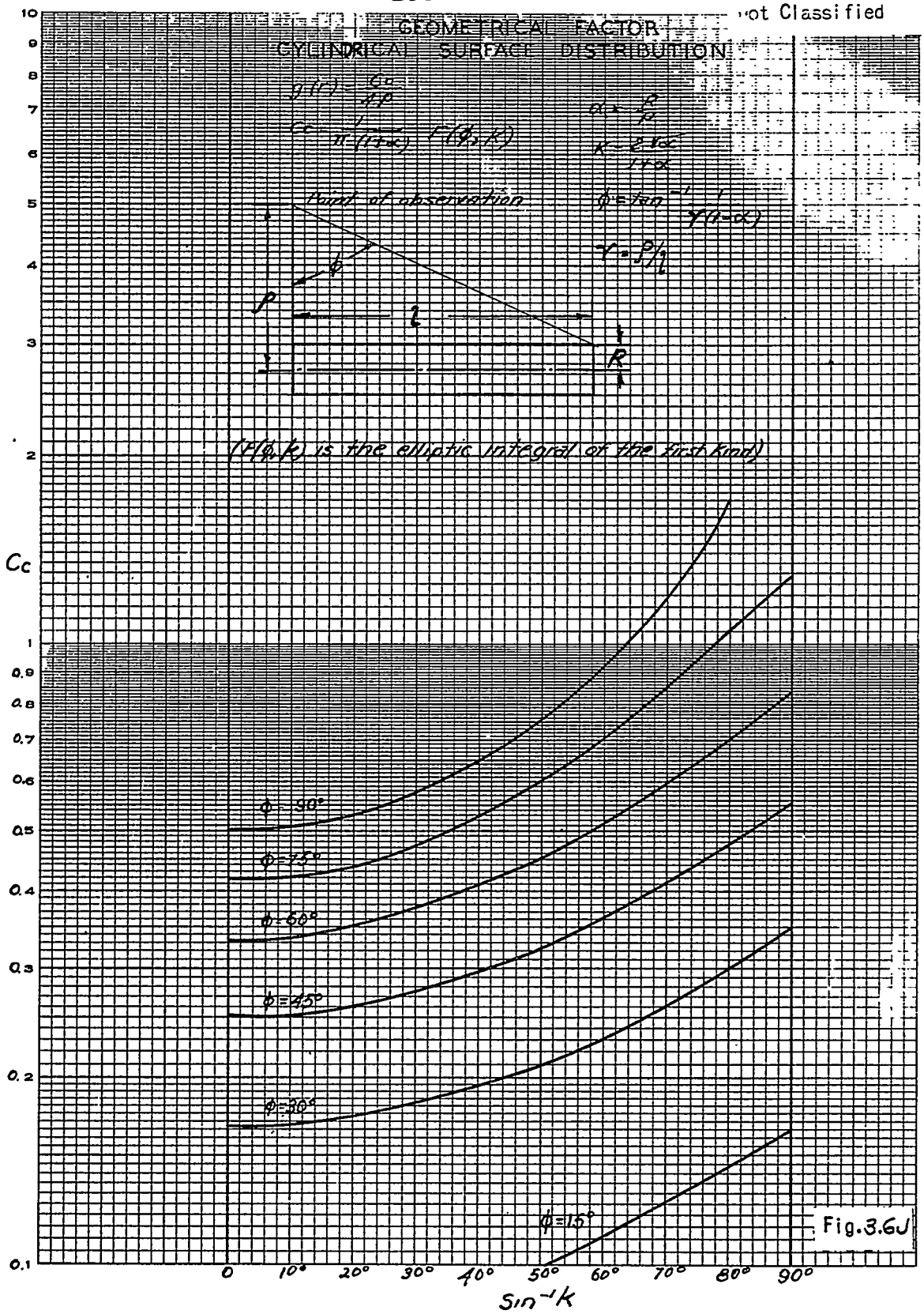
GEOMETRICAL FACTOR
CYLINDRICAL SURFACE DISTRIBUTION
$g(r) = \frac{C_c}{\rho}$
$C_c = \frac{1}{\pi\sqrt{(1+\alpha)}} F(\phi, k)$
$\alpha = \frac{R}{\rho}$
$k = \frac{2\sqrt{\alpha}}{1+\alpha}$
$\phi = \tan^{-1}\frac{1}{\gamma(1-\alpha)}$
$\gamma = \rho/l$
Point of observation
ϕ
ρ
l
R
($F(\phi, k)$ is the elliptic integral of the first kind)
C_c
$\phi = 90°$
$\phi = 75°$
$\phi = 60°$
$\phi = 45°$
$\phi = 30°$
$\phi = 15°$
$\sin^{-1} k$

Fig. 3.6J

Dwg. 10161
Not Classified

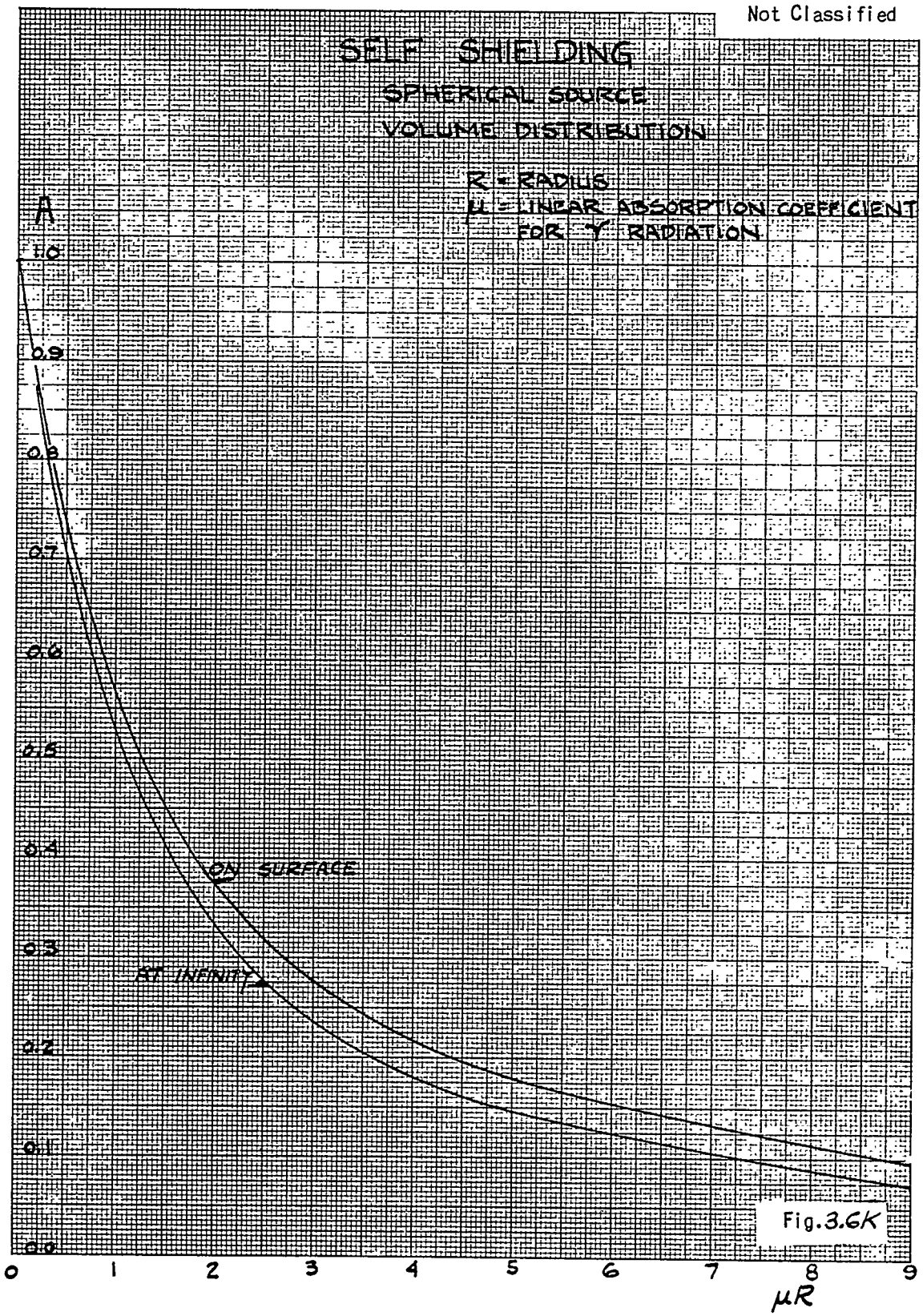

Fig. 3.6K

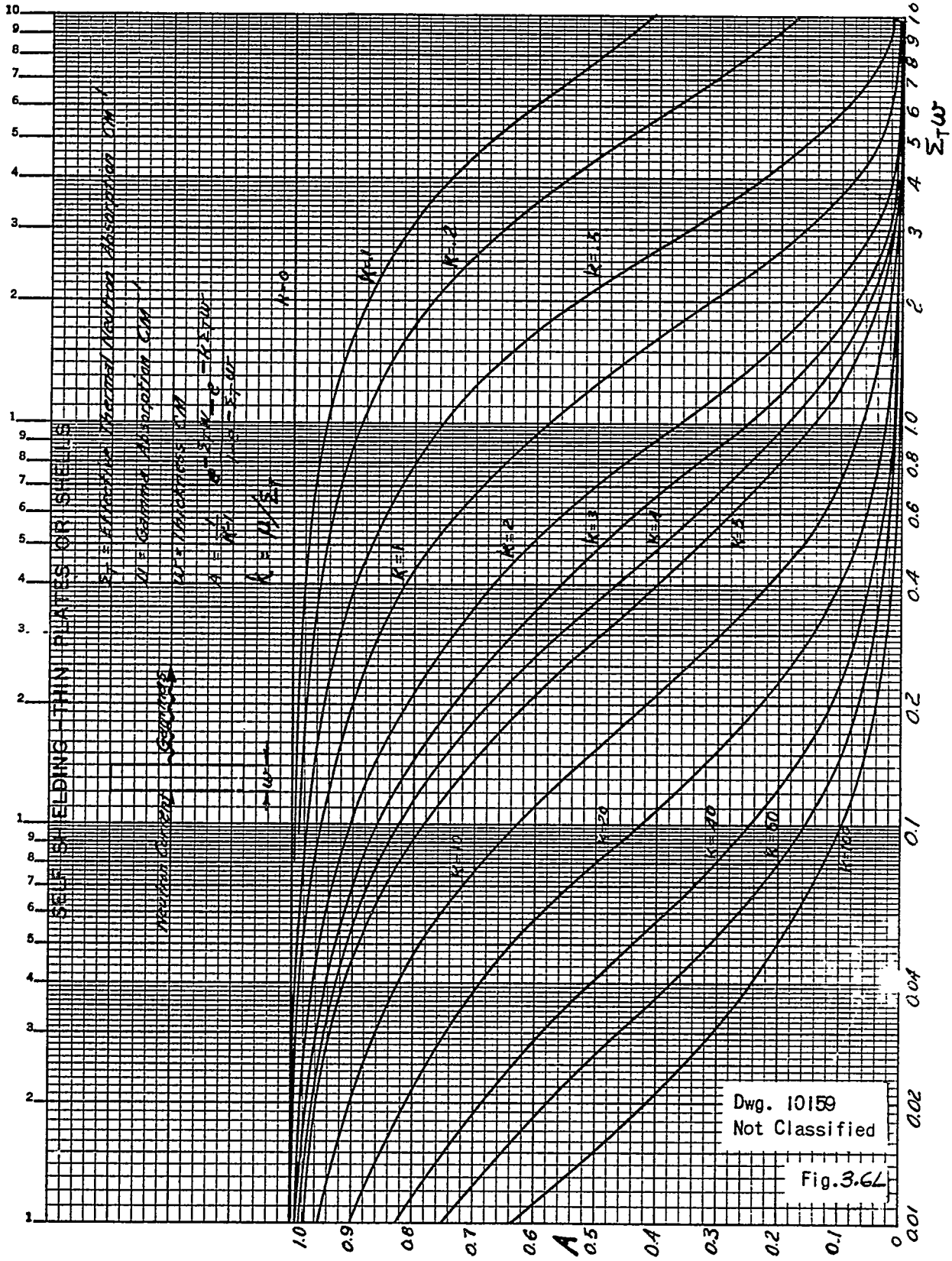

Dwg. 10159
Not Classified

Fig. 3.6L

Dwg. 10160
Not Classified

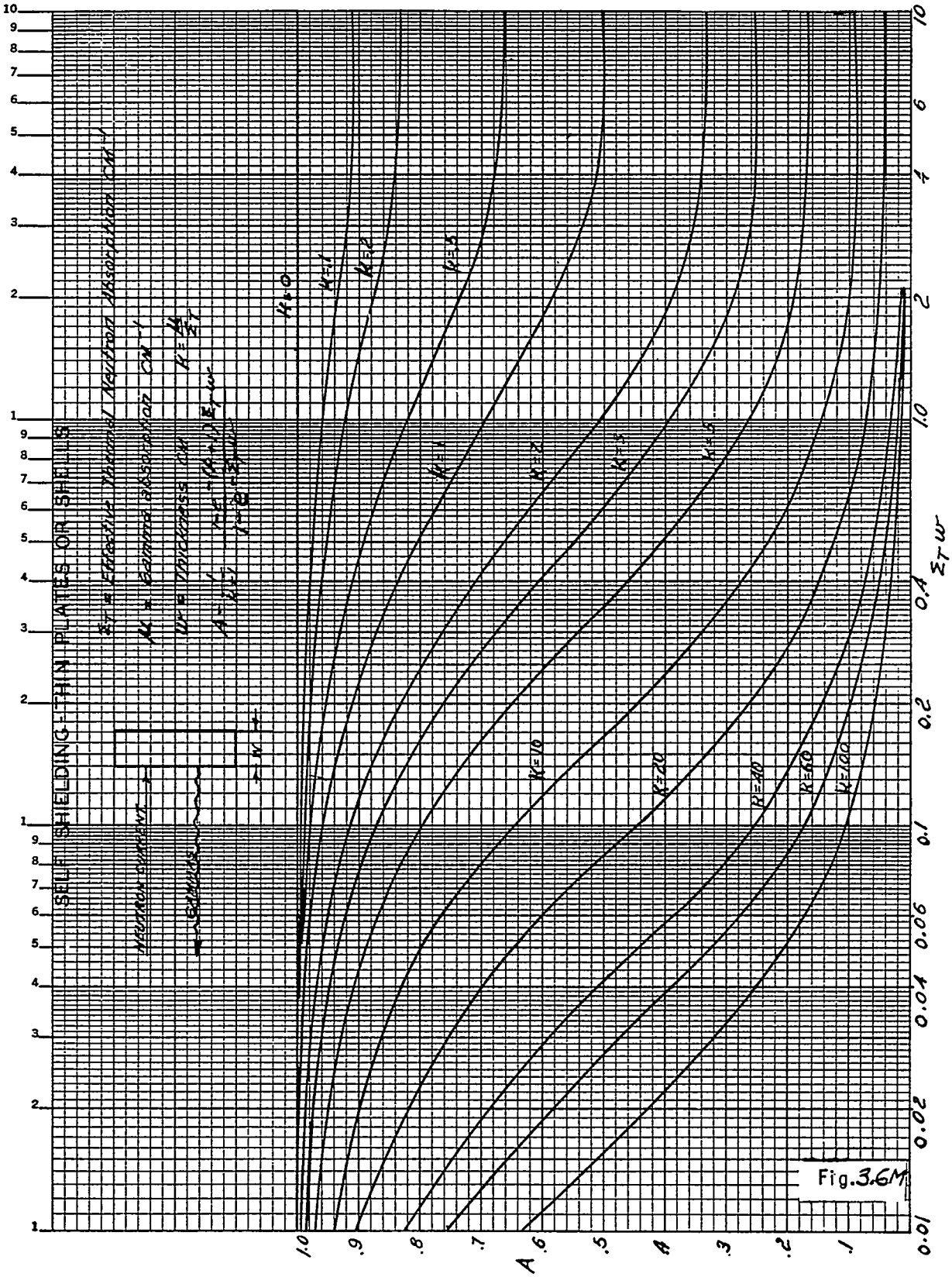

Fig. 3.6M

TABLE 3.6A

Infinite Irradiation, One Day After Shutdown

Component	Neutron Source	Neuts.Abs. n/sec.	Biol.Dose mr/hr	Remarks
Core tank	Core and Reflector	5.29×10^{15}	9800	At 50' unshielded
			120	At 50' (7" concrete)
			7.5	At 50' (13" concrete)
			2960	At 1' outside pressure shell
Pressure vessel	Reactor	1.03×10^{16}	33,800	At 1'
	Shield	5.78×10^{13}	460	At 1'
	Total		34,260	At 1'
Pressure vessel and core tank	Total		37,220	At 1'
			5.4	At barytes concrete
Soup pipes	Reactor	1.75×10^{8}/ft		
	Soup in pipe	4.6×10^{9}/ft		
	Total	4.78×10^{9}/ft	24.2	At 1'
Heat exchanger tubes	Soup	6.72×10^{12}	12.6	At 50' unshielded
			698	At 1' - no water
			65.2	At 1' - with water
Heat exchanger	Soup	1.22×10^{12}	14.1	At 1'
Tank	Shield		0.3	At 1'
Heat exchanger compl.	Total		79.6	At 1'
Soup pump	Soup	2.76×10^{10}	45	At 1'
Shield (Illustration)	Therm.flux, ø	0.022 ø/cm^3	9.5×10^{-7}	In a cavity
	7.9×10^{6}	1.74×10^{5}/cm^3	7.5	In a cavity

From Table 3.6A the following conclusions regarding accessibility are made:

1. The soup system must be thoroughly flushed after shutdown.

2. Piping repairs may be made at 1 ft distance for all piping separated from the pressure vessel by 2 ft of concrete.

3. The pressure vessel must never be uncovered except remotely from behind a 1 ft concrete shield or the equivalent.

4. The core tank must be removed remotely from 50 ft with the operator behind 1 ft of concrete.

5. When hauling the core tank to the dump, the tank should be 12 ft from the driver and an equivalent of 3 in. of lead-shielding between. This arrangement gives 120 mr/hr equal to 1/2 hr per day permissible exposure.

6. Heat exchanger tubes may be removed from 50 ft without a shield. The header on the heat exchanger may be disengaged manually if not more than 1/2 hr is required.

7. Shielding blocks which are closer than 2 ft to the pressure vessel shall not be handled manually.

3.7 Heat Generation and Temperature Distribution

It is assumed that all gamma photons and neutrons entering the shield are absorbed with the energy of absorption appearing as heat. The integrated total heat generated within the concrete has been estimated as follows:

Gamma heating	3.21 Kw
Neutron heating	8.85 Kw
Total heating	12.06 Kw

The heating effect is assumed to be substantially proportional to the thermal neutron flux through the shield resulting from the slowing down and absorption of neutrons and subsequent absorption of the secondary gammas produced. The relaxation length of fast neutrons in barytes concrete is assumed as 8 cm. With these assumptions, the heating effect may be expressed as

$$W = 1300\ e^{-3.81\ x}\ \text{Btu/ft}^3\text{-hr}$$

at x - ft inside the shield.

The differential equation for the temperature distribution in a flat slab for steady state heat flow is

$$\frac{d^2T}{dx^2} = -\frac{1300\ e^{-3.81\ x}}{k}$$

Two successive integrations of this equation yields the expression for temperature distribution

$$T = -131\ e^{-3.81\ x} + C_1x + C_2$$

Two cases were studied:

Case 1. Assume no cooling on inner face of the shield. All heat is to be removed by conduction to the outer faces and hence by convection and radiation. Solution of the equation for these boundary conditions indicates that without internal cooling the concrete temperature may ultimately become exorbitantly high.

Case 2. Assume cooling air through the internal structure at a rate to maintain the inner surface temperature at 100°F. Solution of the temperature equation for this boundary condition indicates that the shield temperature may run at a maximum of approximately the boiling point of water at atmospheric pressure at a distance of one foot from the inner surface of the shield.

3.8. HRE Shield Cooling System

The HRE shield cooling system is shown by Figure 3.8A. The minimum requirements for this system are that it shall be capable of inducing at least 1000 cfm of air through the internal shielding structure at 0.500 inches of negative water pressure differential between the building and the inside of the shield. Thus, if there is any leakage from the high pressure soup system, radioactive fission products will not escape from the reactor shield and contaminate the process building air, but rather will be discharged through the duct and fan system along with radioactive argon generated in the air surrounding the reactor, and, hence, out through a 100 ft stack to be disseminated in the upper air strata.

A weighted-damper inlet duct is inserted in the upper east wall of the D_2O cell. Air is induced through this duct and caused to flow downward through the D_2O cell, where it is distributed into the heat exchanger cell and the soup cell. These cells connect to the bottom of the reactor cell by means of the channels in the concrete holding

Drawing # 10189

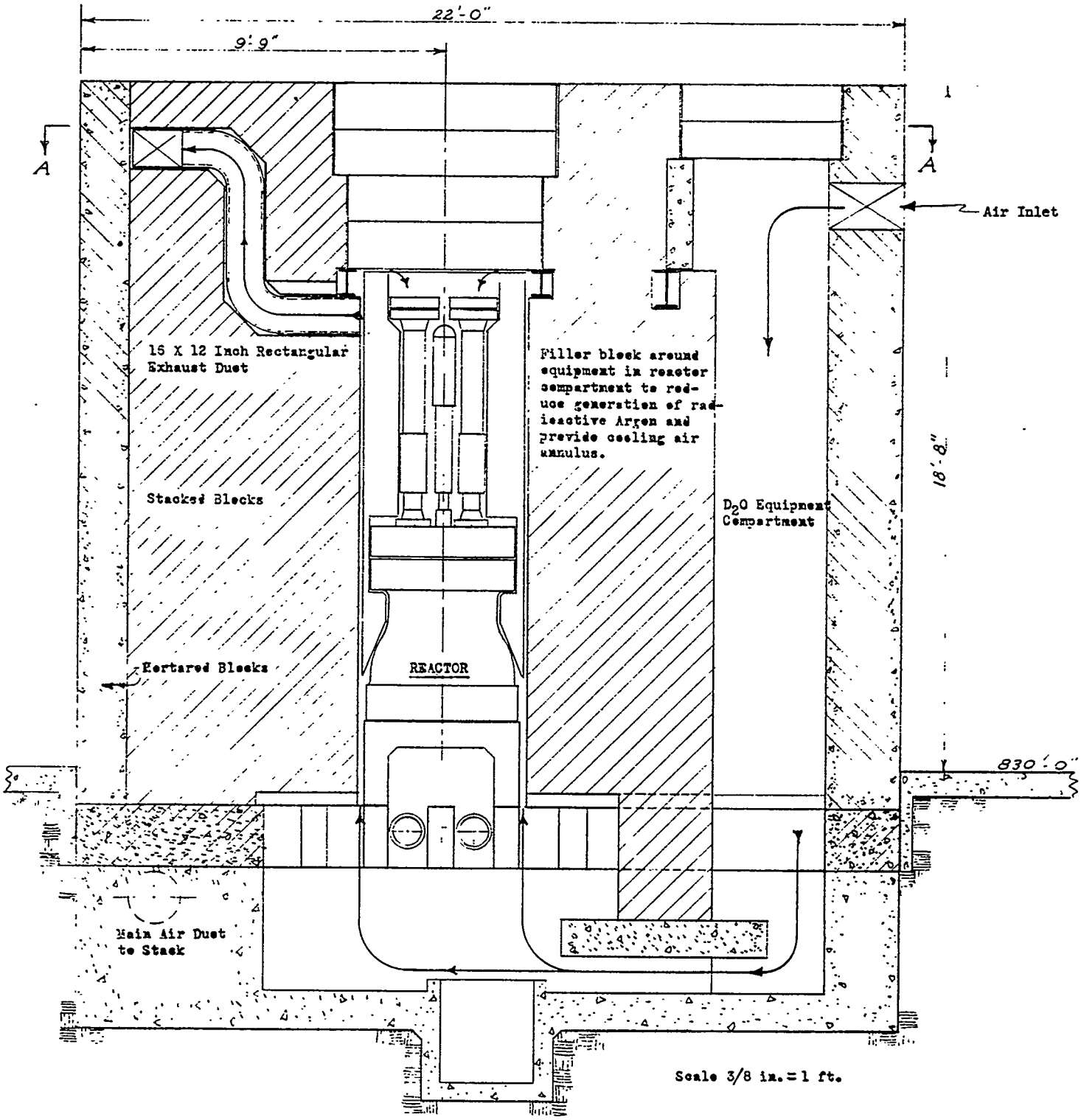

FIGURE 3.8A

DISTRIBUTION OF AIR THROUGH SHIELD

the dump tanks. Hence, the bottom of the shield structure under the reactor functions as a plenum chamber from which the cooling air flows upward through the reactor cell and hence discharges through a 12 x 16 inch duct to the stack. The shield cooling system equipment is described as follows:

(1) Air-duct inside of shield. This duct is rectangular in cross section and is 12 inches in depth by 16 inches wide.

(2) Main air-duct from shield to fan. A transition from the 12 x 16 inch rectangular duct is made to a 16 inch standard pipe leaving the shield. A 16 inch internal diameter pipe has the same pressure drop per foot of length for equal discharge as a 12 x 16 inch rectangular duct. This 16 inch pipe is buried to a depth of 3'-6" under the floor level of the building to shield against radioactive argon from the reactor shield.

(3) Ventilating fan. A Trane centrifugal ventilating fan, size 15, type BI, was used. This fan is capable of discharging 2048 cfm of air at 70°F and 29.92 in. Hg. at 1883 rpm against a static pressure of 3 inches of water. The limit load power required at 1883 rpm is 1.36 hp. The motor used is a 3 hp, 1740 rpm, 3 phase, 220 volts, 60 cycle, induction motor which is splash proof and weather resistant. The fan is belt driven from the motor with adjustable V-belt pulleys. Speed range of the fan rotor is from 1500 rpm to 2000 rpm.

(4) Discharge stack. Specified as a 1 ft inside diameter sheet steel pipe 100 ft high. The base of the stack is shielded to 20 ft above ground level.

(5) Air monitor. The discharge air is monitored by one or more ionization chambers to determine the level of activity in the discharge air.

Cooling Air Heat Balance

(1)	Entrance temperature of air	70°F
(2)	Flow of air	1000 cfm
(3)	Heat removed	41,000 Btu/hr
(4)	Density of air	0.075 lb/ft^3

FIGURE 3.8B

DUCT-FAN CHARACTERISTIC CURVES FOR THE HRE SHIELD VENTILATION SYSTEM

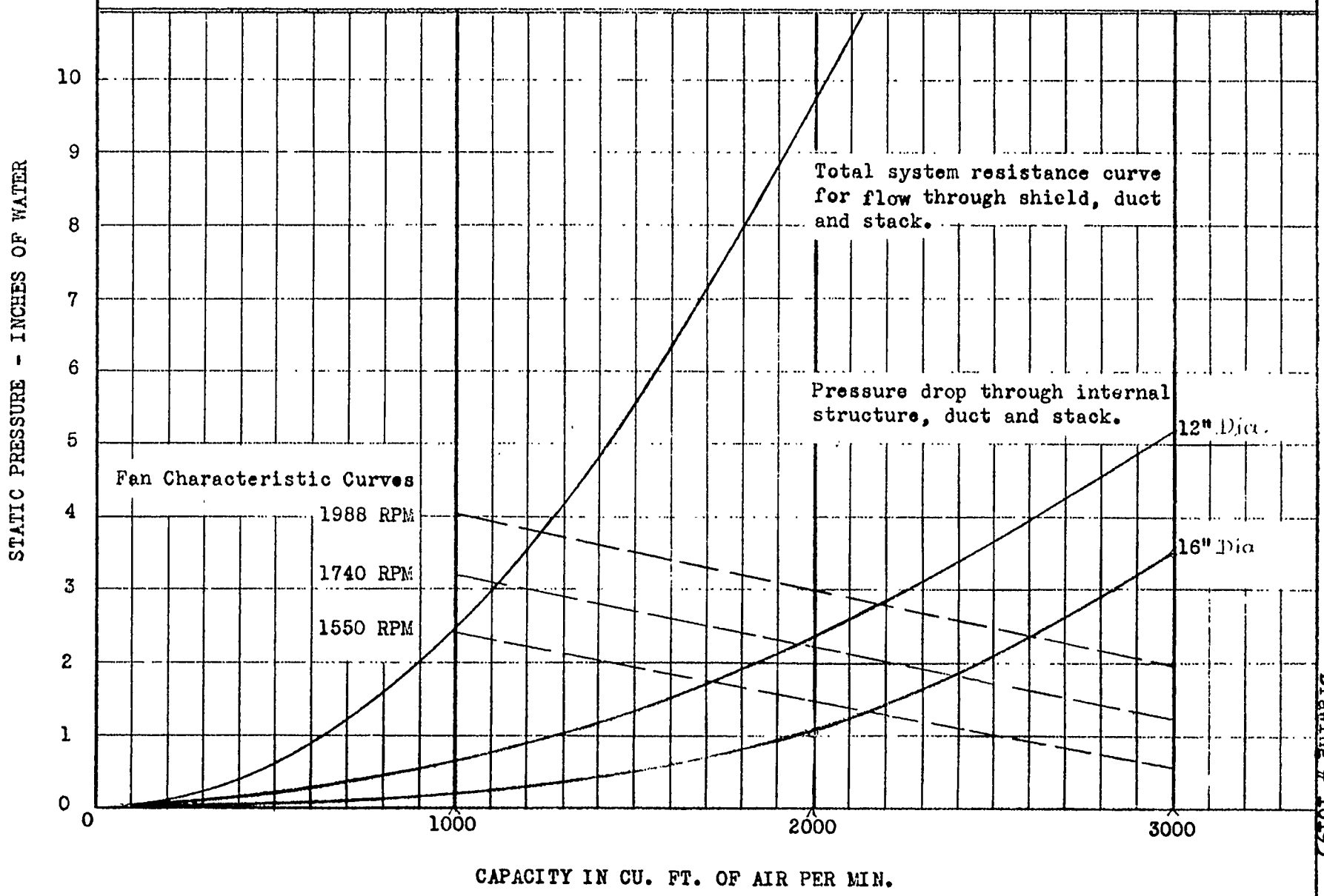

SECRET

Drawing # 10193

(5) Specific heat of air 0.241 Btu/lb-°F

(6) Exit temperature of air 108°F

Pressure Drop through Cooling System

(1) Interior shielding structure. Air is assumed to flow at 1000 cfm through the interior shielding compartments to the bottom of the structure, hence upward through a 1-inch annulus surrounding the reactor to the 12 x 16 inch outlet duct.

$$\Delta h = 0.0713 \text{ in } H_2O$$

(2) Entrance loss to main air duct

$$\Delta h = 0.0175 \text{ in } H_2O$$

(3) Pressure loss in main air duct

$$\Delta h = 0.0800 \text{ in } H_2O$$

(4) Back pressure loss through stack

$$\Delta h = 0.2220 \text{ in } H_2O$$

(5) Total system pressure loss

$$\Delta h = 0.3908 \text{ in } H_2O$$

Plotting the system pressure drop versus flow and superimposing the fan characteristic curves as shown on Figure 3.8B, indicates that a 1740 rpm motor belted down to a speed of 1550 rmp at the fan shaft will induce 1000 cfm of air through the system against a total pressure drop of 2.4 inches of water. Since 0.391 inches are required for overcoming the duct and shield internal passage pressure drop, 2 inches will be available for pulling air through the shield inlet. At 2000 cfm flow and a fan speed of 1988 rpm the fan will discharge against a total static pressure of 3 inches of water. The pressure drop through the system at this flow is approximately 1.02 inches of water, leaving 1.98 inches available as potential pressure differential over the shield wall.

Duct Shielding

An analysis of argon activity in the discharge air indicates that there may be as much as 2.2 curies discharged per day if the space in the reactor compartment is not filled. If this space is reduced from a net volume of 6.45×10^6 cc without filler to a net volume of

1.60×10^6 cc with filler, the activity will be reduced to approximately 0.55 curies per 24 hours. Therefore, with filler in the reactor compartment, the reactor may be expected to generate a total of 0.562 curies per 24 hours throughout the entire shielding volume.

At 2.2 curies per 24 hour day, the activity in a 16 inch schedule 30 pipe is calculated to be 1.96×10^{-6} curies per foot and the number of gammas emitted per cm of length per second

$$Q_2 = 2.38 \times 10^3 \text{ gammas/sec-cm.}$$

With the duct buried to a depth of 3'-6" under the floor, the resulting radiation intensity at a point on the floor directly over the duct is 6.88×10^{-3} Mev/cm^2-sec resulting in a dose rate of 1.30×10^{-8} r/hr.

CHAPTER 4

THE HRE CONTROL - PLATE SYSTEM

4.1 Purpose of Control Plates

Safety Plate - The purpose of the safety plate is to introduce about the spherical core tank as much neutron absorbing material as practical to reduce k, the neutron reproduction factor, on power surges of the reactor. To be effective, this must be accomplished within 0.2 seconds after a power surge (scram signal). The neutron absorbing material must also be far enough removed from the core tank during normal operation so that it will not capture any appreciable amount of neutrons which would lower the reproduction factor k.

Regulating Plate - The purpose of the regulating plate is to vary the position of a neutron absorbing material relative to the core tank of the reactor to produce a fine adjustment of the power output. The variation in position of the neutron absorbing material produces a variation in k, the neutron reproduction factor. The movement of the regulating plate need not be fast acting because this type of reactor is self regulating due to its large negative temperature coefficient.

4.2 General Discussion of the Design of the Control Plates

It was initially decided that all mechanism of the control plates was to be contained within thimbles or housings attached to the top flange closure. No control plate operating mechanism was to be allowed within the spherical pressure vessel. The pressure within these housings would be the same pressure as in the spherical pressure vessel (1000 psi), but the temperature would be reduced by cooling. The mechanism is thus subjected to less radiation since it is contained within housings outside the spherical pressure vessel.

The 1000 psi pressure is maintained in the control rod housings and in the spherical pressure vessel with helium introduced at the top of each control plate housing (see Figure 4.2A). Deuterium and oxygen generated in the heavy water are purged from the control rod housings and the spherical pressure vessel by the flow of helium, thus reducing the possibility of an explosive mixture of these gases. Heavy water vapor, which may enter the control rod housing, is condensed by a cooling water jacket about the lower part of the control rod housing. The flow of helium, plus the jacket cooling water, should result in a safe control rod housing temperature.

The safety plates, which contain the neutron absorbing material to surround the core tank in the spherical pressure vessel, are connected

	MATERIAL
	—
	BAKELITE
.	BRASS
	BRASS
	STEEL
LE	BAKELITE
	—
	SST 347
IR	—
W	See Note 8
	SST-347
.	SST-347

…m.
…ss Fit
…h J-2

…m 7.

…s 7, ¢

…g, They

… Position
…tches,

…As Shown

… To

…s,

…nce

…sion,

— Pin Rotated 90°

— See Note 8

(10)

	D-9067
	C-8621
	TD-1735
	D-8618
	D-8609

…603

	D-8610
LS	D-8608
	D-8607
	D-8605
.	D-8605
	D-8606
	D-8602
.s	D-8601
	D-8612
	DWG. NO.

…. 7500

…ROD

…TORY

DIVISION

…-8603

by a rod through a hole in the top flange closure to an armature in the safety rod housing. An electromagnet above the armature is driven vertically by a power screw connected to an electric gear motor (see Figure 4.2A). The magnet may be lowered to magnetically engage the armature, and the motor drive can then be reversed to retract the neutron absorbing plates. When the magnet is de-energized the rod will be accelerated toward the core by a compressed spring and the force of gravity. A shock absorber is utilized to safely bring the rod to rest.

Under normal operation the safety rod with the neutron absorbing material attached would be raised to its highest position. In the event of a scram signal, the magnet would release the armature and the rod would be accelerated down to surround the core tank with the neutron absorbing material.

In the case of the regulating rod, a neutron absorbing material near the core tank in the spherical pressure vessel is connected by a rod through a hole in the top flange closure to a guided nut in the regulating rod housing. A power screw, driven by an electric gear motor, elevates or lowers the guided nut to vary the position of the neutron absorbing material relative to the core tank.

Two safety plate assemblies and one regulating plate assembly are used and they are equally spaced about the core tank and top flange closure. The three holes through the top flange closure for the control rods are limited in size and are located as far from the center of the flange as possible. This is done to reduce weakening the flange with holes close to its center where maximum stress occurs. The holes in the top flange closure for the safety plates were originally located to coincide with the vertical center of gravity axis of the safety plates, but were moved out radially and their diameter reduced to 1-7/8 inches to reduce stress in the flange. This was done at the expense of having the vertical gravity axis of the safety plates off the axis of the rod from which they are suspended. The off center load of the plates creates an appreciable bending moment in the rod when it is suddenly stopped at the end of its fall.

Some of the initial assumptions for the motion of the rod are as follows:

a. the plate travel is to be 18 inches,
b. the release time of the magnet is to be less than 0.003 sec,
c. the time for the first 3 inches of fall of the plate is to be less than 0.060 sec,
d. the total falling time of the plate is to be less than 0.20 sec, and
e. the stopping distance of the plate is to one inch.

The plate travel was later changed to 12 inches after it was decided that the neutron absorbing plates would be far enough removed from the core tank at this distance. The main reason for reducing the travel to 12 inches was because of the space limitation for the control housing between the top flange closure and the underside of the reactor top shield plug.

The release time of the electromagnet is dependent upon several variables in the design of the magnet, and so, cannot be accurately determined until a particular magnet and armature are tested. The release time may be varied by changing the air gap at the face of the magnet and/or the current in the coil of the magnet.

The time for a body to fall free through 3 inches is approximately 1/8 sec. In order to reduce the falling time of the plate through its first 3 inches of fall to less than 0.060 sec. requires an initial acceleration greater than gravity. The amount of the initial acceleration required to do this depends upon the initial force and the weight of the rod being accelerated. By reducing the weight of the rod, the force required to obtain the initial acceleration is reduced. By decreasing the weight of the rod, the size of spring necessary to obtain the initial required force is decreased, and also, less work is required to stop the rod at the end of its fall. The weight of the rod and safety plates (the accelerated body), is calculated to be approximately 23 pounds. An initial acceleration of 5.525 g is obtained by using a spring compressed 3 inches by a force of 104 pounds. The time for the first 3 inches of rod fall using the compressed spring force is 0.057 sec. The velocity of the rod after 3 inches of fall is 7.24 ft/sec. After the first 3 inches of travel, the rod falls free with an acceleration of g.

At 12 inches of fall, without being stopped, the rod will have a velocity of approximately 10 ft/sec and the time expended is 0.144 sec. In all the calculations for the fall of the rod, all resistances such as guide friction, fluid drag, and air friction were found to be small and were neglected. The total kinetic energy of the rod after dropping 12 inches is approximately 36 ft. pounds.

A hydraulic shock absorber was designed, using heavy water as the fluid, to stop the rod in the last inch of fall. Because of possible sudden pressure changes which would cause the hydraulic fluid to flash and be lost from the shock absorber, this type was not accepted. The main advantage of a hydraulic shock absorber was that it could absorb all the kinetic energy of the rod without causing bounce. The stopping distance of the rod was changed to the last 1/16 inch of its fall by using a stack of belleville springs as the shock absorber. This was done at the expense of having some bounce of the rod and having the safety plates on the rod at rest, 1/16 inch above their former lower position about the core tank.

[redacted]

The control rods were designed so that all of their mechanisr except the safety plates and rod of the safety rod assembly could be easily removed for maintenance without removing the top flange closure from the spherical pressure vessel.

4.3 Detailed Design Description of the Control Plates by Sub Assemblies

Safety Plate Assembly - To satisfy the purpose of the safety rod, a study was made of geometrical arrangements of neutron absorbing material about the spherical core tank. The neutron absorbing material selected was boral, which is a mixture of boron carbide in 2S aluminum. The boral absorber plates are enclosed in stainless steel 347 sheets and are welded water tight. Initially the boral was clad with aluminum sheets to minimize weight. Aluminum was found to have a high corrosion rate in contact with the heavy water, and so, was replaced with stainless steel. To minimize weight, the plates were made as thin as possible.

Four, curved, stainless steel clad, boral plates were stacked about the core tank within a 120° sector as shown in Figures 4.3A and 4.3B. The boral plates, in their lowest position, have a clearance of 1/8 inch with the core tank, and are so stacked as to absorb all radiation emanating from the center of the core tank within their area of coverage. The four stainless steel clad, boral plates are held in position as shown in Figures 4.3A and 4.3B by welding them to two spacer plates and a support frame, which, altogether form the safety plate assembly (see Figure 1.1C). Two such safety plate assemblies were arranged about the core tank within a 240° sector.

Regulating Plate Assembly - The regulating plate is contained in the center of the 120° sector of the core tank not occupied by the safety plates. It is made of the same materials as the safety plates, namely, boral clad with stainless steel 347. The original regulating plate design was made 1-3/4 inches wide so that it could be removed through the 1-7/8 inch diameter hole in the top flange closure. The location and size of this plate is shown in Figures 4.3A and 4.3B. Also shown in Figure 4.3B is the regulating plate in its upper and lower position relative to the core tank. This design of plate was approved and made, but was found to be of inadequate area, hence, the size of the regulating plate has been increased to eight times its previous area, and so has necessitated a redesign of the regulating rod mechanism, since the new plate will not pass through the existing 1-7/8 inch diameter hole in the top flange closure. The new design is shown by Figure 4.3C.

Rod Assembly - The purpose of the rod assembly is to connect the neutron absorbing material in the spherical pressure vessel with the mechanism in the control rod housing.

[redacted]

Dwg. 16224

~~Restricted Security Information~~

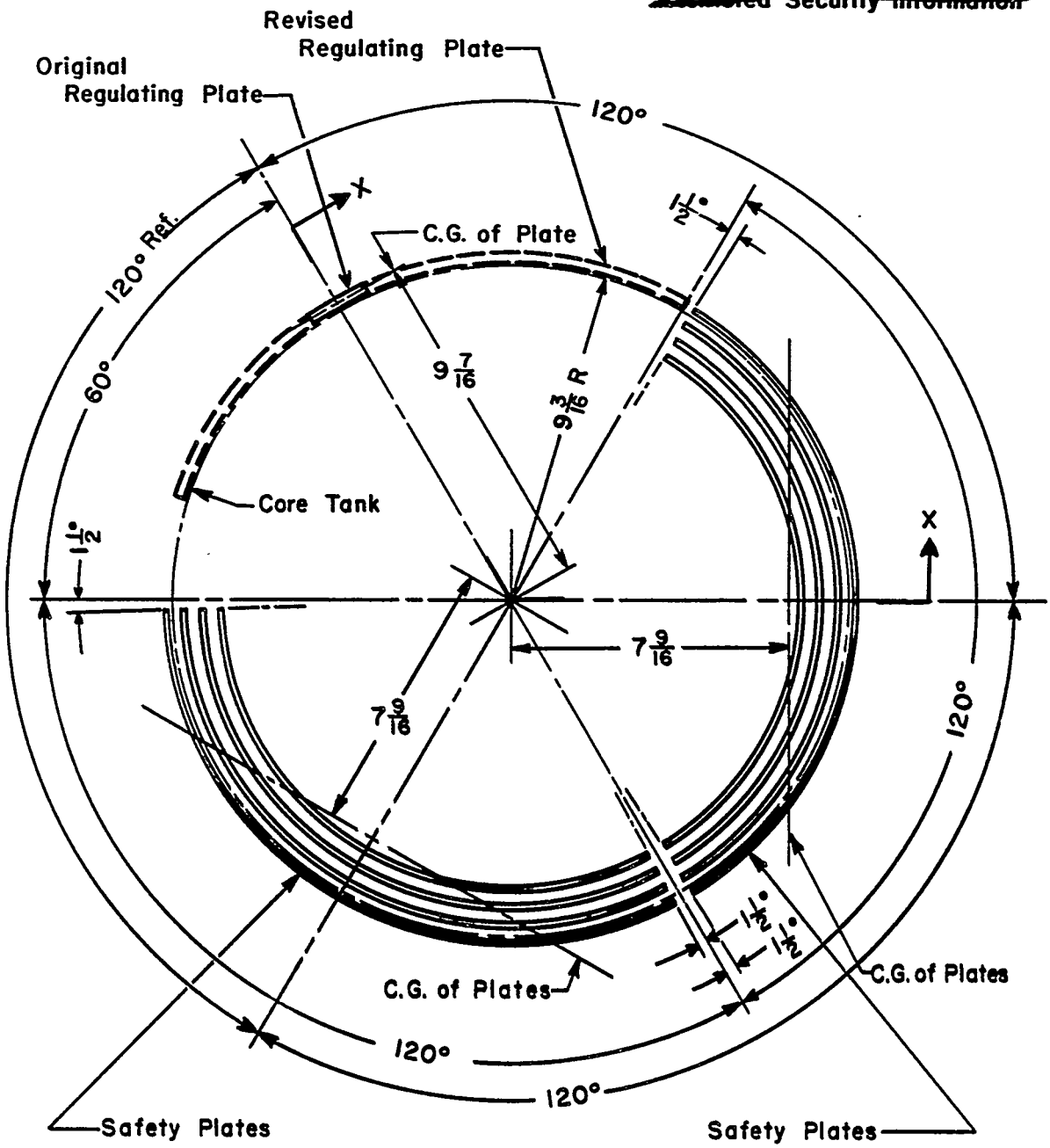

Fig. 4.3A. Arrangement of Safety and Regulating Plates. (Top View—See Fig. 4.3B for Section X-X Detail.)

Dwg. 16225

[redacted]

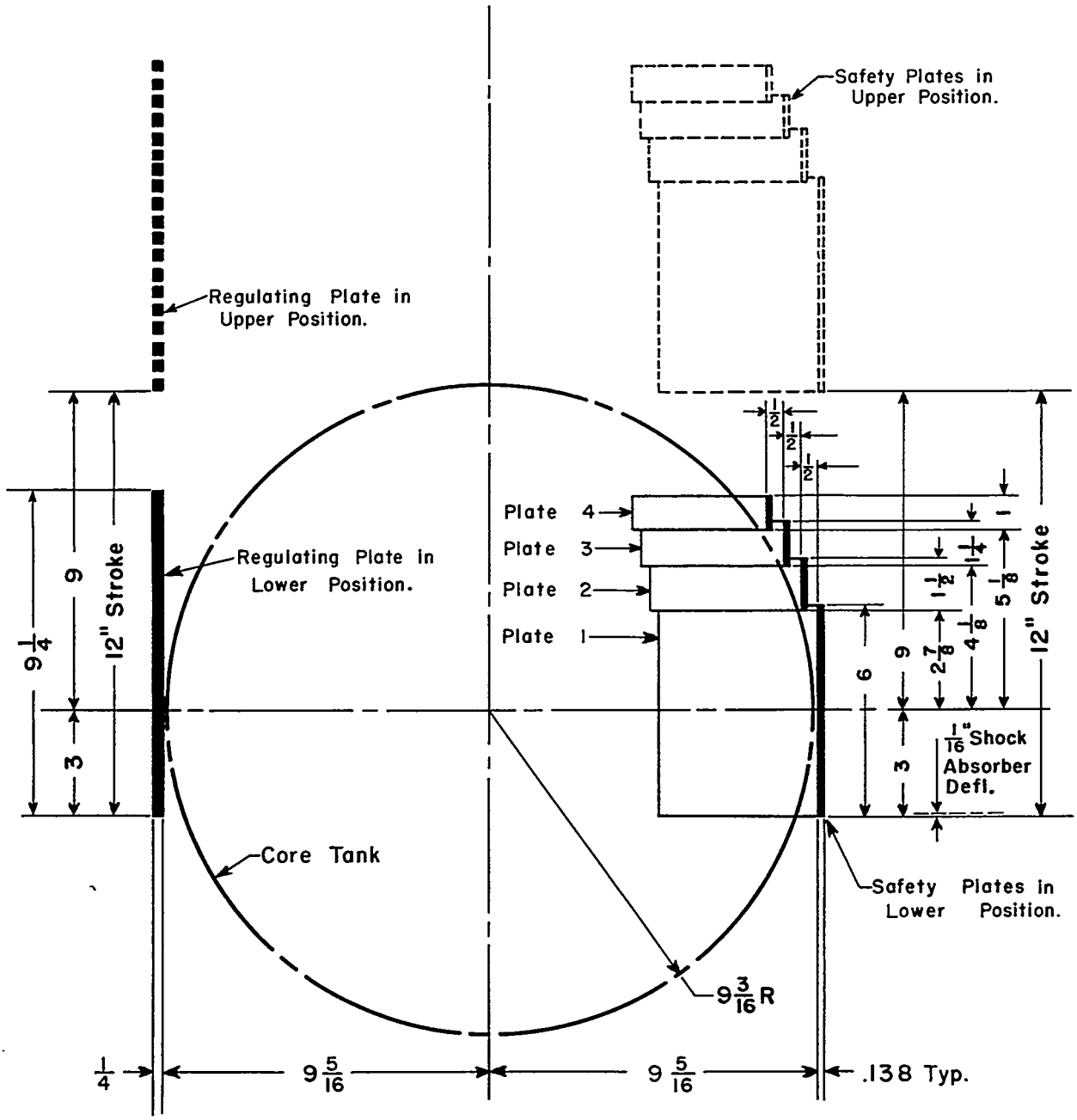

Fig. 4.3B. Arrangement of Safety and Regulating Plates. (Elevation—Section X-X of Fig. 4.3A.)

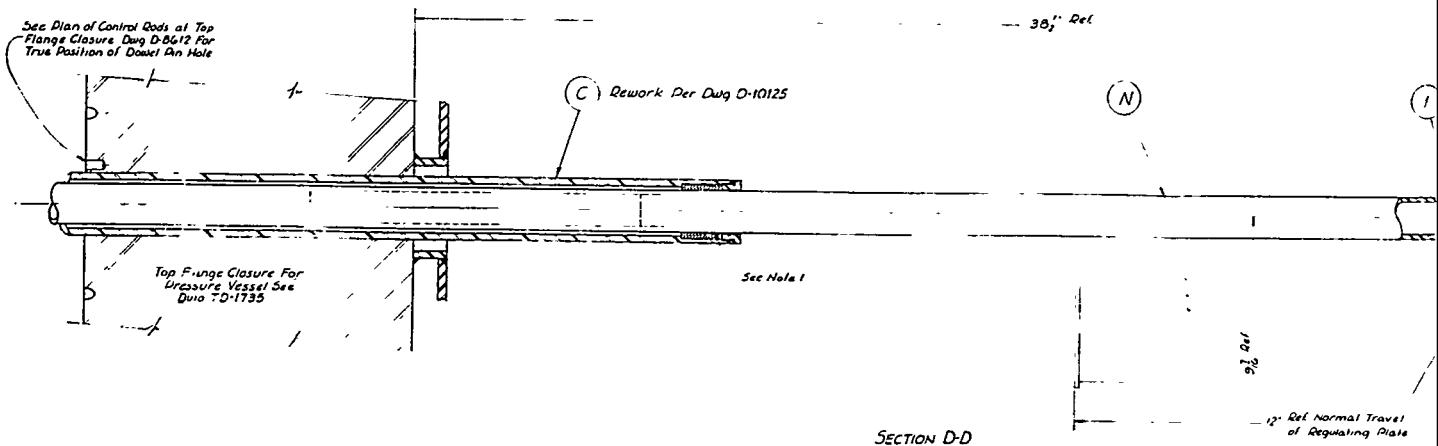

SECTION D-D
See Plan of Control Rods at Top Flange Closure of Pressure Vessel. Dwg D-8612

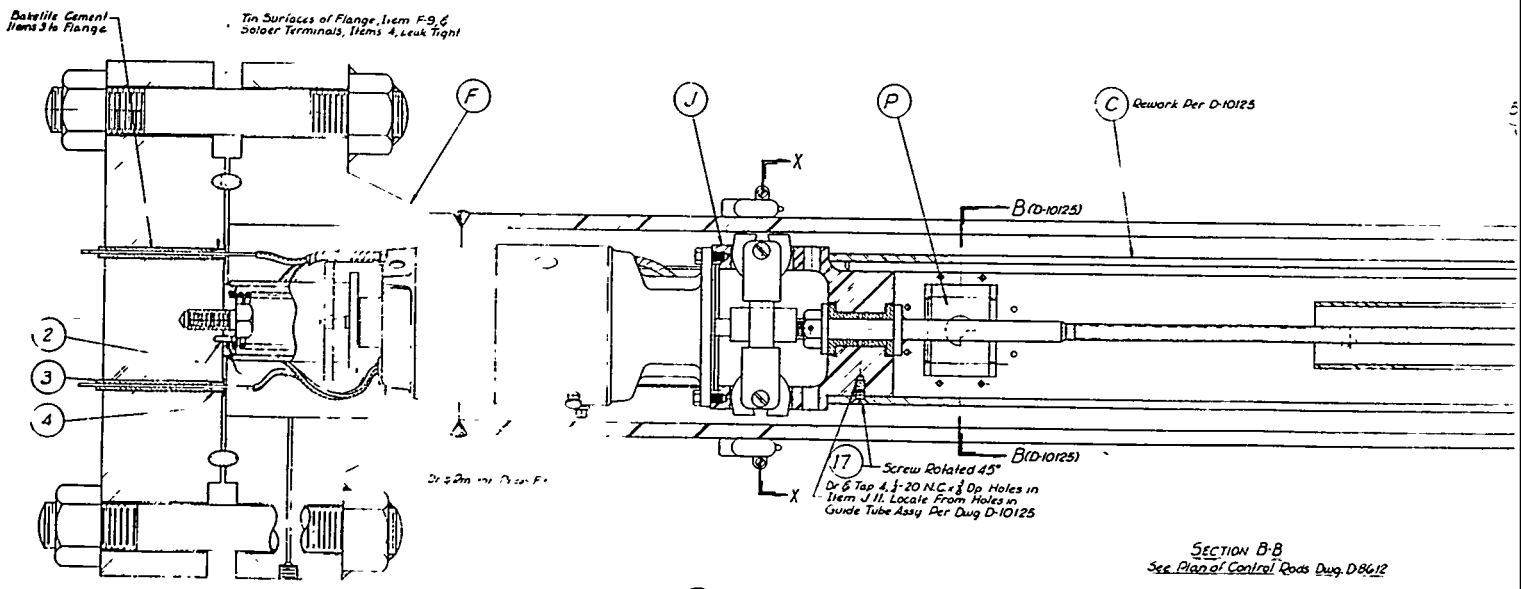

SECTION B-B
See Plan of Control Rods Dwg. D-8612

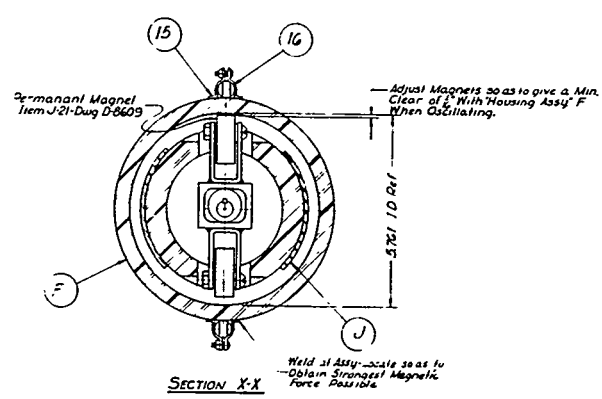

SECTION X-X

FIG

NO.	REVISIONS	DATE	APPR.	APPR.
DRAWING NO. E-10123				

DRAWN	DATE	CHECKED	DATE	APPROVED	DATE
Cauble	11-7-51	RWF	11-21-51	WBB	4-1-52
DESIGNED	DATE	SUBMITTED	DATE	APPROVED	DATE

HEALTH PHYSICS	MEDICAL	OPERATIONS	SAFETY
FIRE PROTECTION	RESEARCH SHOP	MAINTENANCE	

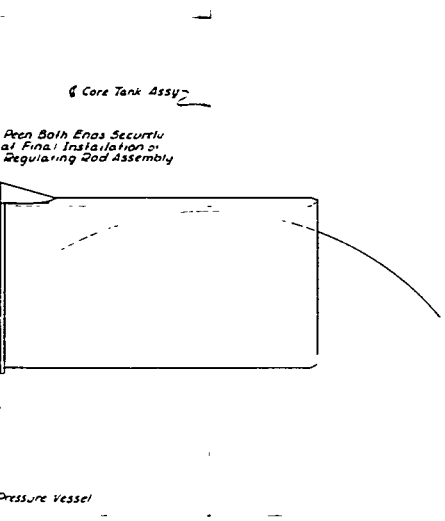

MATERIALS LIST

ITEM NO	DWG. NO.	QTY.	NAME	SIZE	MATERIAL
1	Stock	1	Pin	1/2 ø x 1 1/2 Lg.	SS1 347
2		1	Pin Dowel	1/2 ø x 3/8 Lg	S11
3	This Dwg	6	Insulator Tube	.120 O.D. x .040 I.D. x 3 3/8	Bakelite
4	D 8610	6	Terminal (Item 7, D 8610)	See Detail	
5	D 10124	1	Tube Assembly	See Detail	SS1 347
6		1	Nut	See Detail	Bronze
7		1	Retainer	1 1/2 ø x 3/8 Lg	SS1 347
8	Stock	4	Soc Hd Cap Screw	1/2-20 NC x 1 1/2 Lg	S11
9	D-10124	1	Guide Plate	See Detail	SS1 347
10	Stock	2	Pin	1/2 ø x 3/8 Lg	SS1 347
11		1	Pin	1/2 ø x 1 1/8 Lg	SS1 347
12		2	Fl. Hd Mach Screw	#0 24 x 3/8 Lg	SS1
* 13		1	Ring Gasket Oval R46	5 3/8 PD x 1/4 W	See Note
14	D 10125	1	Coil (See note 2)	See Detail	SS1 347
15	D 8610	2	Switch Clamp	See Detail	SS1 347
16	Stock	2	Magnetic Switch	Mercoid, Fig #9 B1R	
17		4	Flat Mach Screw	1/2 20 NC x 1/2 Lg	S11
C	D-8606 D-10125		Guide Assembly		
F	D 8607	1	Housing Assembly		
J	D 8609	1	Hold Down & Drive Assy		
N	D-10124		Reg Rod & Plate Assy		
P	D-10125	2	Limit Switch Assy		

* Item 12 to be Armco Iron & Shall Conform to ASA B16E-1939 - Drill for Leak Detection Per Dwg C 8621

† Grind ends of screws to provide easy entrance

Note 1 Bushing to have .005 Diametral Clearance With Tube, Item N-2

Note 2 Refer to Item C-9 Dwg D-8606

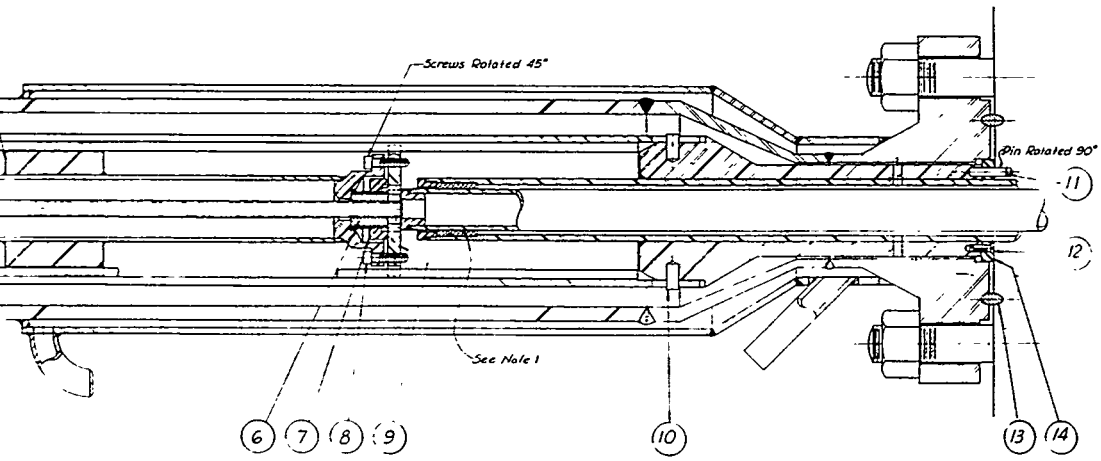

NOTE: THIS DRAWING SUPERSEDES REGULATING ROD ASSY. E-8406

E-10123

Flange & Gasket Drill For Leak Det	C-8621
Top Flange Closure	TD-1785
Plan View Control Rods	D-8612
(J) Hold Down & Drive Assembly	D-8609
(F) Housing Assembly	D-8607
(C) Guide Assembly	D-8606
Regulating Rod Limit Switch Details	D-10126
(P) Regulating Rod Guide Tube & Switch Assy	D-10125
(N) Regulating Rod & Plate Assy & Dets	D-10124
REFERENCE DRAWINGS	DWG. NO.

4.3C

THIS DRAWING CLASSIFIED AS OFFICIAL USE ONLY
PER J. Segaser

LIMITS ON DIMENSIONS UNLESS OTHERWISE SPECIFIED
FRACTIONS ±
DECIMALS ±
ANGLES ±
SCALE 1/2" = 1"

H.R.E. EQUIPMENT Bldg. 7500

REVISED REGULATING ROD ASSEMBLY

OAK RIDGE NATIONAL LABORATORY
OPERATED BY
CARBIDE AND CARBON CHEMICALS DIVISION
UNION CARBIDE AND CARBON CORPORATION
OAK RIDGE, TENNESSEE

SUBMITTED	ACCEPTED	APPROVED
J. Segaser	[illegible]	
WO 380638		E-10123

The rod assembly for the safety rod assembly consists of a 1-1/4 inch O.D. tube, a shield for rod, an armature connector, a guide plate, and an armature holder. One end of the tube is slotted so as to easily connect and be welded to the safety plate assembly. The other end of the tube is welded to the armature connector (see Figure 4.2A). The guide plate, with keys welded in, is keyed to the armature connector and is held fixed by screwing the armature holder onto the armature connector. The armature assembly is fastened to the armature holder by two screws. The guide plate has two slots in its outer edge which run in guide rods of the guide assembly. The guide plate, being keyed to the rod and guided by the guide assembly, prevents the rod and safety plate assemblies from rotating during their travel. A hex socket set screw with cone point (not shown in Figure 4.2A) is screwed into the armature-holder through a clearance hole in the armature assembly to seat in a spotted hole in the guide plate. This set screw was added as a locking device to prevent the armature holder from becoming unscrewed from the armature connector.

The shield for the rod is an iron plug 10 inches long within the tube. It is plug welded to the tube in such a position that it fills the hole in the 10 inch thick top flange closure when the rod is at mid-travel. The purpose of the shield for the rod is to reduce the radiation from the core tank in the control rod housing. A spiral groove is provided in the shield for the rod and two small holes are drilled at the lower end of the tube to allow any condensate to drain from the tube.

The rod was designed, keeping minimum weight in mind, to withstand the tensile and bending stress caused by the shock load in stopping. The bending stress in the rod is caused by the off center load of the safety plate assembly. All parts of the rod assembly are made of stainless steel except the shield for the rod which is iron.

The armature assembly, armature holder, and guide plate are constructed so that they may be removed from the rod by the use of long tools to permit removal of the guide assembly for servicing. This may be accomplished after the magnet assembly, magnet support assembly, cable assembly, and hold down and drive assembly are removed from the housing assembly with the blind flange at the top of the housing assembly. Holes are provided on the top of the armature assembly for the use of a spanner type wrench. Tools must be long enough to perform this operation from above the reactor shielding.

A rod limit stop is shown in Figure 4.2A fastened to the tube of the rod within the spherical pressure vessel. The rod limit stop runs in a rod limit support which is fastened to the underside of the top flange closure. The purpose of the rod limit stop is to prevent the rod and safety plate assemblies from falling down when the armature head of the rod is removed to permit removal of the guide assembly.

The tube of the rod and the safety plate assembly may not be removed after final installation unless the top flange closure is removed from the spherical pressure vessel.

Guide Assembly - The purpose of the guide assembly is to guide and support the mechanism of the control rod assembly. The guide assembly consists of a lower and an upper guide. The upper guide is a 4 inch standard pipe, which has two 1/4 inch square guide rods fastened on the inside, 180° apart. The lower guide is a 1-1/2 pipe welded to an adapter head for connecting to the upper guide and it contains graphitar bushings, retainer rings, and a collar with a dowel pin. The lower guide is close fitted within the hole of the top flange closure and it projects 10 inches into the spherical pressure vessel from the underside of the top flange closure. Each end of the 1-1/2 inch pipe of the lower guide contains a graphitar bushing with a screwed retainer ring, through which the tube of the rod assembly travels. The upper and lower guides are concentric and are fastened together with four screws. The guide assembly seats on the top flange closure and is positioned on the top flange closure by a dowel pin. The collar on the lower guide is provided so as to match drill into the top flange closure for the dowel pin. Grooves in the underside of the collar in line with holes in the 1-1/2 inch pipe of the lower guide allow condensed heavy water vapor in the control rod housing to return to the spherical pressure vessel. Holes are provided in the lower guide both above and below the top flange closure to allow free passage of gas between control rod housing and spherical pressure vessel.

All material in the lower guide is stainless steel 347 except for the graphitar bushings. The 4 inch pipe of the upper guide is seamless steel and the 1/4 inch square guide rods are brass. Hardened 410 stainless steel was originally specified for the 1/4 inch square guide rods, but due to warpage in hardening, they were made of brass. The 1/4 inch square guide rods are coated with molybdenum wax for lubrication.

The pipe of the upper guide contains 78 one-inch diameter holes and a long slot. Four tapped holes are provided along the long slot of the upper guide for attaching trip brackets, which are used to actuate the limit switches. The one inch diameter holes and the slot in the pipe are provided to facilitate circulation of the helium for cooling and to reduce the cushioning effect of the helium when the safety rod is dropped. These holes and the slot also provide a means of observing the operation of the control rod mechanism, when its operation is tested preliminary to its installation within the control rod housing.

The safety rod mechanism can be set up and tested without the housing assembly, since there is no connection between them, except for the hold down spring and electrical connections to the blind flange at the top of the housing assembly. The hold down and drive assembly may be fastened to the guide assembly, during testing without the housing assembly, with screws in holes provided at the top of the guide assembly.

The safety rod assembly, less its housing assembly, when set up for test, should be supported at the lower guide by a rigid framework which will take the place of the top flange closure.

The same guide assembly was originally used for all three control rods, but the redesign of the regulating rod assembly has necessitated a change in its guide assembly.

Shock Absorber Assembly - The purpose of the shock absorber assembly is to stop the safety rod at the end of its fall without stressing the rod beyond its elastic limit. Approximately 36 ft. pounds of kinetic energy must be absorbed to bring the safety rod to a stop.

A shock absorber was designed (see Figure 4.2A) using a stack of belleville springs to stop the rod in the last 1/16 inch of its travel. Each spring used has a deflection of 1/16 inch with a load of 615 pounds. The energy required to deflect each spring is approximately 2 ft. pounds. With 16 springs stacked upon each other as in the shock absorber assembly, a load of 9840 pounds, neglecting friction, is required for a deflection of 1/16 inch. The energy required to deflect the 16 springs 1/16 inch, neglecting friction, is approximately 32 ft. pounds.

When friction between the springs is considered, the load to deflect them 1/16 inch is approximately 13,000 pounds, when a friction coefficient of 0.3 is assumed. The energy required to deflect the 16 springs 1/16 inch is approximately 36 to 38 ft. pounds when friction is considered. The energy of the springs is equal to or more than the energy required to stop the rod.

The shock absorber was designed so that the number of active springs could be varied to obtain the 1/16 inch deflection. If less than 16 springs are required to absorb the energy of the rod, the unused springs are to be placed below the absorber body as spacers.

The shock absorber assembly consists of the 16 belleville springs, a retainer, an absorber body, a tube, and a washer. The retainer fits over the top of the 1-1/2 inch pipe of the guide assembly and centers the belleville springs and the top of the absorber body. The flange on the retainer serves as the plunger for the shock absorber. The underside of the flange of the retainer and the top of the absorber body are machined to match the conical contour of the springs when they are compressed 1/16 inch. This allows a maximum deflection of 1/16 inch in the springs. The absorber body is constructed of a 3 inch steel pipe with a disk welded inside at each end. A hole is provided through both disks concentric with the pipe. The holes through the disks which have a close fit with the retainer and tube, center the absorber body about the 1-1/2 inch pipe of the guide assembly. The bottom of the absorber body and the top of the steel washer are

machined to match the conical contour of a belleville spring. The brass tube centers the bottom of the absorber body, the washer, and any springs placed between the absorber body and the washer.

A hydraulic shock absorber using heavy water as the fluid was designed to stop the rod in the last inch of its fall. This design was rejected because of the possibility of losing the fluid by flashing when a sudden pressure drop occurs. The advantage of the hydraulic shock absorber over the spring type is that all of the energy of the rod is dissipated at the end of its travel. In the spring type shock absorber, the rod is brought to zero velocity, but not all the energy is dissipated. The springs, being deflected 1/16 inch have potential energy to kick back the rod or cause bounce. Just how much the rod bounces should be determined by testing.

The safety rod is stressed when stopped at the end of its fall by the maximum load on the springs. This load, however, is greater than the load causing maximum stress in the weakest section of the rod assembly. The load at the weakest section, which is at the top of the tube of the rod assembly, is approximately 78 percent of the maximum load on the springs or approximately 10,000 pounds. This load causes a stress of approximately 20,000 psi, which is within the elastic limit. The bending stress in the tube of the rod assembly, caused by the off center load of the safety plate assembly, cannot be accurately determined. An estimate of the combined tension and bending stresses indicates the rod to be stressed close to its elastic limit. It was decided that the rod be built and tested to find out if it would be permanently deformed when dropped repeatedly.

No shock absorber assembly is required in the regulating rod assembly.

Magnet Assembly - The purpose of the magnet assembly is to provide a magnetic coupling between the rod assembly and the drive or lifting mechanism, so that in the event of a scram, the connection may be very quickly broken to allow the rod and safety plate assemblies to fall.

The magnet is required to lift the weight of the rod and safety plate assemblies (23 pounds) plus the force of the accelerating spring (104 pounds) - a total of 127 pounds. The magnet is also required to release the rod and safety plate assemblies within 0.003 seconds.

Because of the over-all space limitations of the control rod, the magnet was designed with a hole through its center through which the push rod and lifting rod or drive screw may freely pass. The push rod is a tube over the drive screw which imparts to the rod assembly the force of the accelerating spring located in the magnet support assembly. The O.D. of the magnet was made 3-3/8 inches so as to clear the 1/4 inch square guide rods of the guide assembly which are 3-1/2 inches apart. The over-all length of the magnet assembly is 3-7/16 inches.

The magnet is made of a stack of 17 - 1/8 inch thick armco iron laminations with a 5/8 inch thick plate of armco iron on each face of the stack. The stack is held together at the top end by two screws which are insulated from the laminations and one plate by bakelite tubes and washers. The laminations and plates are insulated from each other by a coat of bakelite varnish approximately 0.001 inch thick. An annular hole concentric with the hole through the center of the magnet is provided for the coil and bobbin. The two lead wires from the coil run through holes, insulated with bakelite tubes, in one of the 5/8 inch thick plates to the top of the magnet. A tapped hole is provided in each of the 5/8 inch thick plates at the top of the magnet for fastening to the magnet support assembly. A notch and a tapped hole are machined in each of the 5/8 inch thick plates at the lower or holding face of the magnet to fasten on brass coil retainers with screws. The magnet is chamfered 45° at the holding face to a diameter of 3-1/8 inch. The inside pole face is recessed 0.005 inch from the outside pole face to provide an air gap in the magnetic circuit. The inside and outside pole faces are the holding faces of the magnet separated by the annular hole for the coil.

The coil and bobbin assembly is cemented in the annular hole of the magnet housing for fastening and waterproofing. The coil is wound on the bobbin, which is made of bakelite impregnated asbestos, with approximately 4500 turnsof #28 (0.0126) A.W.G. heavy formex insulated copper magnet wire. The layers of wire are insulated from each other with sheets of 0.002 inch thick polyethylene. The lead wires, which are polyethylene cable, are soldered to the ends of the coil wires on top of the coil.

The soldered joints and the coil wire end from the bottom of the coil are insulated from the coil with pieces of mica. The top of the coil is coated with bakelite cement and, before drying, the bobbin and coil are covered with a tube of bakelite impregnated asbestos. The lead wires are anchored by the bakelite cement and protrude through slots in the outer edge of the bobbin and cover.

The magnet is laminated to reduce the eddy currents when the magnet coil is de-energized, which in turn will reduce the release time of the magnet. It was found when the magnet was being tested that the laminations slipped when supporting a load. This problem was eliminated by welding the laminations together at the top end of the magnet. Although this short circuits the laminations, it will not appreciably increase the release time of the magnet, because the short circuiting is done at a place in the magnetic circuit where the flux density change is small.

The magnet was designed to support a load of approximately 140 pounds with 10 to 15 watts supplied to the coil at a current of 0.1 amps.

It is intended that the magnet be tested with the armature to determine the load versus current characteristics and the release time. The release time may be decreased by increasing the air gap. The air gap may be altered by grinding either of the pole faces of the magnet. The holding power of the magnet may be increased, if the iron is not saturated, by decreasing the outside pole face area. The area of the outside pole face may be decreased by reducing the chamfer diameter of the outer pole face.

No magnet assembly is required in the regulating rod assembly.

Armature Assembly - The purpose of the armature assembly is to provide a means by which the rod assembly may be magnetically coupled to the magnet assembly. The armature is a 3-3/8 inch diameter by 5/8 inch thick piece of armco iron which completes the magnetic circuit of the magnet when the two are engaged.

The armature assembly is fastened to the armature holder of the rod assembly by two 1/4 inch screws. The armature contains two 1/4" tapped holes, and the mating holes in the armature holder are 5/16" in diameter with a 1/2" counterbore 1/4" deep. These holes are provided so as to remove the armature and armature holder from the rod using a spanner type wrench. A 9/16 inch diameter hole through the center of the armature allows clearance for the lifting rod or drive screw. The 9/16 inch diameter hole is countersunk 90° to 11/16 inch diameter on the top face of the armature to provide a seat for the push rod.

The armature assembly was originally laminated in the same manner as the magnet assembly, but was made solid since the laminations slipped in testing. The top face of the armature was nickel plated, when it was found in testing that its rusting was increasing the air gap between magnet and armature.

A small hole is provided through the armature in line with a hex socket set screw in the armature holder. The set screw may be turned by a tool through the hole in the armature to lock the armature holder to the guide plate of the rod assembly.

No armature assembly is required in the regulating rod assembly.

Magnet Support Assembly - The purpose of the magnet support assembly is to suspend the magnet assembly from the guided nut, which is vertically translated by the rotation of the drive screw of the hold down and drive assembly. In addition to suspending the magnet assembly, the magnet support assembly contains the accelerating spring and push rod, the limit switch assembly, and a mercury switch mechanism for indicating magnet to armature contact. (See Figure 4.2A)

The magnet support assembly consists of two 3-7/8 inch diameter stainless steel guide plates connected by the support housing, which is a 2-1/2" steel pipe approximately 7-3/16 inches long. The top guide plate, which contains the bronze nut fastened with four screws, is welded to the 2-1/2 inch pipe. The bottom guide plate, which contains a spherical seat for the magnet swivel, is screwed into the 2-1/2 inch pipe and locked with a set screw. Both guide plates have two notches 180° apart which run with a medium fit in the guide rods of the guide assembly.

The bronze magnet swivel, which seats in the spherical surface of the bottom guide plate, is screwed into the magnet support and locked with a set screw. The magnet support is a 3-7/8 inch diameter by 5/8 inch thick stainless steel plate which is fastened to the magnet assembly by two screws. The magnet assembly and the two screws are insulated from the magnet support with a sheet of mica and bakelite insulators respectively. The magnet support contains slots, 180° apart on its periphery, which run in the guide rods of the guide assembly with 1/16 inch clearance. Two holes are provided through the magnet support and through the lower guide plate for the lead wires to the magnet assembly. A slot is provided in the top and bottom guide plates and in the magnet support so as to clear the limit switch trip screws which are mounted on the guide assembly.

The magnet assembly, suspended from the spherical seat on the bottom guide plate by the magnet swivel, will seat itself on the armature when engaged. After the motor is turned off by the lower limit switch, when magnet and armature engage, the overtravel of the magnet support assembly is taken up in the 3/8 inch space between its lower guide plate and magnet support. The push rod is a 11/16 inch O.D. by 1/16 inch wall tube, chamfered at the lower end and welded at the top end to a head which seats the accelerating spring. The tube of the push rod slides over the drive screw and through the magnet and magnet swivel to impart to the armature and rod assembly the force of the accelerating spring when compressed. When the magnet is lowered to a position 3 inches above the armature, the lower chamfered end of the push rod will seat in the countersunk hole through the armature. Further lowering of the magnet until it engages the armature, compresses the accelerating spring and "cocks" the push rod. The force of the accelerating spring when compressed 3 inches is designed to be 104 pounds. The magnet, when it is magnetically coupled to the armature and is elevated by the drive assembly, will lift the rod assembly plus the force of the compressed spring. If for any reason the magnet, when coupled to the armature and in an elevated position, is de-energized, its magnetic holding force is quickly lost and the rod assembly will fall. The accelerating spring imparts a force of 104 pounds through the push rod to give the rod assembly an initial acceleration of 5.525 g, when the magnet releases the armature. The rod assembly will fall through the first 3 inches with the acceleration diminishing to g, thereafter, the fall is with constant acceleration g.

A switch bracket with a mercury switch is fastened to the side of the support housing (the 2-1/2 inch pipe). A pin protrudes through a slot in the pipe from a lever of the switch bracket to which the mercury switch is attached. The lever is held down by a spring and in this position the contacts of the switch are open. When the lever is raised the contacts of the switch close. The switch bracket is to be adjusted so that the head of the push rod will raise the pin on the lever and cause the mercury switch contacts to close when the armature and magnet engage. The electrical leads on the mercury switch are soft soldered to wires of the cable assembly. This switch is used to indicate the engagement of magnet and armature.

A tube, through which the cable assembly connects to the magnet support assembly, is welded in a slot of the top guide plate. Tapped holes are provided in the support housing (the 2-1/2 inch pipe) for attaching the limit switch assembly.

No magnet support assembly is required in the regulating rod assembly.

Limit Switch Assembly - The purpose of the limit switch assembly is to stop the motion of the rod lifting mechanism at both the upper and lower end of its travel. This is accomplished by interrupting the electrical input of the driving motor for the direction of rotation in which motion is to be stopped.

Two small mercury switches, an upper and a lower, are used to stop the mechanism within its limit of travel. The small mercury switch was selected because its arcing is contained in a glass vessel which will withstand the pressure inside the control rod housing. The two mercury switches are held within switch holders which pivot on pins to tilt the switches. A spring is provided with each switch holder to give a snap action to the tilting of the switch. The switch assembly is mounted by a bracket to the side of the magnet support assembly. A trip lever, or butterfly, is welded to the pivot pin of each switch holder on the outside of the switch bracket. Trip pins, located on the guide assembly, actuate the trip levers of the switch holders to tilt the switches. One guide assembly trip pin is used to trip the lower limit mercury switch when the magnet engages the armature. The other guide assembly trip pin will trip the upper limit mercury switch, thereby stopping the rod in a position 12 inches above its maximum lowered position.

The switch assembly is located on the magnet support assembly because no electrical disconnects are required between the switches and the top blind flange of the control rod housing. The magnet assembly, magnet support assembly, limit switch assembly, cable assembly, and the hold down and drive assembly are all removed from within the control rod housing when the top blind flange of the housing assembly

is removed. The upper and lower switch levers, or butterflies, are designed so as not to interfere with the trip pins on the guide assembly when the above mentioned removal of assemblies is done.

The electrical terminals of the mercury switches are soft soldered to their respective wires of the cable assembly. One wire of the cable assembly is common to each limit switch and the indicating switch.

The limit switch assembly was originally used in all three control rod assemblies. The redesign of the regulating rod assembly has necessitated a change in its limit switch assembly.

Cable Assembly - The purpose of the cable assembly is to provide a take up between the magnet support assembly and the hold down and drive assembly for the six electrical wires which serve the magnet and mercury switches.

The six electrical wires are bundled and taped to a helical steel spring of 2-1/2 inch mean diameter. The spring is made of 0.075 inch diameter music wire and it contains eight active coils of 1-3/16 inch pitch. The spring may be extended or compressed 6-3/16 inches with the six electrical wires attached. The helical bundle of wires is covered with a tinned copper braid shielding which holds the wires together and protects the insulated wires from abrasion. Each end of the helical wire bundle is held in position at assembly by anchoring within a curved tube in both the magnet support assembly and the hold down and drive assembly.

Two wires of the cable assembly connect the leads of the magnet to the spark plugs in the top blind flange of the housing assembly. The other four wires of the cable assembly connect the limit switches and the indicating switch to kovar glass terminals in the top blind flange of the housing assembly. One of the four wires is a common wire to each of the three mercury switches. All the wire ends are to be soft soldered when connected to their proper terminals at assembly. All six wires are polyethylene insulated. The two wires which connect to the magnet have a heavier insulation and are larger in diameter than the other four since they must have a voltage breakdown of 10,000 or better.

A similar cable assembly was used in the regulating rod assembly consisting of three electrical wires. This design has been changed with the redesign of the regulating rod assembly.

Hold Down and Drive Assembly - (see Figure 4.2A) This assembly consists of the lifting rod or drive screw, a gear motor, a position indicating mechanism, and a hold down mechanism. The purpose of the gear motor is to revolve the drive screw so as to raise or lower the magnet and

magnet support assemblies with or without the rod assembly. The position indicating mechanism provides a means by which the position of the magnet and the position of the rod assembly, when magnetically coupled to the magnet, may be indicated within 0.05 inch during travel. The hold down mechanism is a device which allows the drive assembly to align itself in the guide assembly and be connected to the blind flange of the housing assembly. The drive assembly is held down by the force of a compressed spring of the hold down mechanism so that it will not be raised when the accelerating spring is being compressed.

The gear motor has a three phase, 220 volt, 1/20 hp motor whose armature shaft is in line with the output shaft of the gear box. The flange type gear box is vertically mounted with output shaft down. The output shaft delivers 0.031 hp, 48 inch pounds torque at 40 rpm. The gear motor is purchased from Janette Manufacturing Company of Chicago, Illinois. Molybdenum lubricants called Liqui-Moly grease and moly wax stix is coated on the gears and bearings of the gear motor to replace the oil and grease with which it is furnished.

A three phase motor was selected because it could be instantaneously reversed and also because it has no commutator whose sparking would be undesirable. This particular gear motor was selected because it could be contained within a 6 inch pipe and because it could be obtained with the desired characteristics.

The flange of the gear motor is fastened to the motor and magnet support, which seats with a medium fit in the top of the guide assembly. The motor and magnet support is a 4-7/8 inch diameter by 5-1/2 inch long piece of stainless steel. It is keyed to the guide assembly by the 1/4 inch square guide rods of the guide assembly to prevent relative rotation. Within the motor and magnet support, the output shaft of the gear motor is coupled to the lifting rod (drive screw). The coupling, which is keyed to both the gear motor shaft and lifting rod, is called a cam, for it is also used to oscillate the position indicator mechanism. The motor and magnet support contains two graphitar bearings in which the lifting rod rotates. The bearing surface between thrust washers on the lifting rod and the end faces of the graphitar bearings supports the thrust of the lifting rod in both directions. The lifting rod is threaded with a 1/2 - 10 acme thread, and, when driven 40 rpm by the gear motor, will raise or lower the magnet and magnet support assemblies at the rate of 4 inches/minute. The time required to raise the magnet assembly through its 12 inch travel is approximately 3 minutes.

The cam, which couples the gear motor to the lifting rod, oscillates a magnet support bracket which is guided in slots in the sides of the motor and magnet support. The cam, whose outer cylindrical

surface is 3/32 inch eccentric with the gear motor shaft, gives a 3/16 inch stroke to the magnet support bracket. A permanent magnet is attached to each end of the brass, magnet support bracket. The magnets when oscillated will actuate magnetic mercury switches outside the control rod housing. One of the mercury switches is actuated every half revolution of the drive screw. The pulses of the mercury switches may be used to determine the position of the magnet support assembly within 0.05 inches, since the lead on the drive screw is 0.1 inch. The magnetic mercury switches are fastened to the outside of the housing assembly after installation of the control rod, so as to be properly positioned for actuation by the permanent magnets.

The hold down mechanism consists of a hold down bracket, hold down spring, hold down guide, and a bearing plate. The hold down bracket is fastened to the motor and magnet support and is suspended from the hold down guide above the motor. The hold down guide is doweled and bolted to the blind flange of the housing assembly. The hold down spring exerts a force of approximately 100 pounds on the top end of the gear motor through a bearing plate and prevents the accelerating spring, when being compressed, from lifting the drive assembly off the guide assembly. When the blind flange of the housing assembly is bolted down as shown in Figure 4.2A, the hold down guide and hold down bracket are disengaged from each other. The hold down bracket, when disengaged from the hold down guide, is allowed to shift laterally within 1/8 inch in any direction. The drive assembly is also allowed this lateral movement and so is free to align itself with the guide assembly. When the blind flange of the housing assembly is lifted, the hold down guide will lift the hold down bracket and the drive assembly. The hold down guide has tapered pins which prevent turning of the hold down bracket. With this design, the only connection between the housing assembly and the control rod mechanism within it, when the blind flange of the housing assembly is bolted down, is the electrical wiring and the hold down spring. Since these are flexible connections, they will allow the control rod mechanism to align itself in the hole through the top flange closure of the spherical pressure vessel.

The wires from the cable assembly pass through a hole provided in the motor and magnet support and along the side of the gear motor to connect to the terminals in the blind flange of the housing assembly. These wires along with the lead wires of the gear motor are soft soldered to their respective terminals in the blind flange.

The hold down and drive assembly is used on all three control rods. Since the regulating rod assembly has been redesigned, some changes may have been made in its hold down and drive mechanism.

Housing Assembly - The housing assembly is the vessel which contains the control rod mechanism. It is required to safely withstand the working pressure of 1000 psi of the spherical pressure vessel.

The housing assembly consists of a 6 inch, schedule 80, stainless steel pipe approximately 53 inches long, with 1500-pound, oval ring type, welding neck flanges welded on at each end. The lower end of the pipe is connected to a 3 inch flange using a 6 inch by 3 inch, extra strong, concentric reducer. The top end of the pipe is welded to a 6 inch flange to which is attached a 6 inch blind flange. An external cooling water jacket is welded to the lower portion of the housing assembly to provide cooling for the control rod mechanism. The lower end of the housing assembly connects to the top flange closure of the spherical pressure vessel using the 3 inch, oval ring type, flange joint. The housing assembly is concentric with the hole through the top flange closure for the control rod.

Leak detector holes are provided to the oval ring grooves in both the 3 inch and 6 inch welding neck flanges. A hole is provided through both the armco iron, oval rings of the 3 inch and 6 inch joints so that leaks may be detected on either side of the oval rings. A 3/32 inch diameter hole is drilled through the 6 inch welding neck flange (see Figure 4.2A) to introduce helium into the housing assembly. Both the helium inlet hole and the leak detector holes are tapped for high pressure connectors. The nuts and stud bolts of the 6 inch flange are welded to the underside of the welding neck flange to facilitate remote removal of the blind flange.

The underside of the blind flange has a blind, 5/8 inch tapped hole in its center for fastening the hold down guide of the hold down and drive assembly. Seven (.120 inch diameter) holes are drilled through the blind flange on a 4 inch diameter bolt circle for kovar glass terminals. Two holes through the blind flange on the same bolt circle are tapped for the 14 mm. spark plugs.

Two 3/4 inch bolts are provided diametrically opposite each other on the peripheral surface of the blind flange. They are used as lugs for lifting the blind flange and the control rod mechanism which is attached to the flange.

Space limitations were a major factor in the design of the housing assembly. The over-all length was limited to within 6 feet 6 inches, which is the distance between the underside of the top shield plug of the reactor and the top flange closure of the spherical pressure vessel. The diameter of the control rod mechanism, which was held to a minimum, determined the size of pipe for the housing. The spacing of the three control rods allowed just enough room for the use of 6 inch standard 1500-pound flange at the top of the housing assembly. The lower flange of the housing was reduced to a 3 inch size to allow space on the top flange closure for plumbing and to avoid interference with the pressurizer and the nuts on the top flange closure.

The same housing assembly is used for all three control rods. The housing assembly for the regulating rod assembly differs only in the number of holes in the blind flange for electrical connections.

4.4 A Discussion of Some of the Difficulties Encountered in Testing the Operation of the Safety Rod

In testing the operation of the safety rod mechanism it was found that the magnet would not seat flat on the armature, and consequently, would not pick up the rod. A bushing was added to the hole in the magnet with the idea that the push rod, which seats in a chamfered hole in the center of the armature, would guide the magnet so as to seat flat on the armature. This solved the problem during testing, but now that the safety rods are installed the same difficulty is being encountered. The probable reason for this happening is that a slight misalignment is causing the push rod to buckle or tilt when the accelerating spring is being compressed. Friction between the tilted push rod and magnet swivel will cause them to stick and prevent the magnet from seating on the armature.

It is proposed that the magnet be suspended from the magnet support assembly by a flat seat instead of a spherical seat on the magnet swivel. A new, flanged magnet swivel should be provided with enough lateral clearance with the push rod and magnet support assembly so that the magnet may shift to seat on the armature. The push rod should be guided by some device on the magnet support assembly to prevent its tilting and sliding on the inside of the magnet swivel. The lead wires from the magnet to the magnet support assembly should be looped or have enough flexibility so as not to hinder the magnet in seating itself on the armature.

Another problem which causes periodic removal for maintenance of the control rods is the breakage of the glass mercury switches which are used as limit switches and indicating switches within the control rod housing. Although these switches withstand the pressure of the housing (1000 psi) when tested, they break in operation. It is thought that the vibration from the air wrench used to fasten down the blind flange of the housing assembly, or sudden pressure, or heat is causing these switches to break.

It is proposed that a mercury switch of similar size be made of an externally insulated metal thimble soldered to a kovar glass terminal.

During testing it was found that the insulation on the lead wires of the magnet and on the wires of the cable assembly was swelling and melting when subjected to operating temperature. This condition was corrected by replacing all the wires with ordinary hook-up wire and jacketing them with fiber glass tubing and "biroco" spaghetti.

The kovar glass terminals in the blind flange of the housing assembly leaked or were shorted when tested. This difficulty was corrected by the use of threaded brass plugs with tapered seats which screw into the flange and provide a pressure tight joint. Each plug contains a hole in which a kovar glass terminal is soldered. It is easier to solder the kovar glass terminals to the small brass plugs and make a good joint than to the large blind flange.

Another problem that was encountered was the leakage of the stainless steel clad boral safety plates. The plates would rupture when the high pressure in which they were subjected was suddenly reduced. It was found to be practically impossible to weld the plates so that they would be leakproof. The plates were vented to the helium atmosphere of the spherical pressure vessel by a small tube which runs up inside the safety rod above the iron shielding plug. When the plates are vented, a sudden pressure release will not permit a large pressure differential between the inside and outside of the plates which would cause them to burst.

TABULATED DESIGN DATA ON THE SAFETY ROD ASSEMBLY

1. Motor - Gear Motor, Janette Mfg. Company, Chicago Illinois, Type M1, Flange Mounted, 1/20 H.P. 3 phase, 220 volt, 60 cycle; 40 RPM - .031 H.P. - 48 in lbs. output

2.	Drive Screw (lifting rod)	1/2" - 10 Acme
3.	Screw Speed	40 rpm
4.	Magnet and Magnet Support Speed (up or down)	4 in./min.
5.	Magnet and Magnet Support Travel (up or down)	11-15/16 in.
6.	Magnet Support Overtravel (after magnet engages armature in down position)	3/8"
7.	Time for Lifting or Lowering Magnet 11-15/16 in.	2 min. 58-3/4 sec.
8.	Shock Absorber Deflection	1/16 in.
9.	Total Rod Travel (dropped from uppermost position and including shock absorber deflection)	12 in.
10.	Rod Weight (weight of dropping body)	23 lbs.
11.	Accelerating Spring Force (compressed 3 inches)	104 lbs.
12.	Initial Acceleration of Rod (after magnet release)	5.525 g
13.	Holding Force of Magnet (Item 10 + Item 11 + friction)	127 lbs. + friction
14.	Time for Release of Magnet (initial assumption)	0.003 sec.
15.	Acceleration of Rod after 3 in. Travel	g
16.	Time from Release to 3 in. Travel	0.0576 sec.
17.	Velocity at 3 in. Travel from Release	7.243 ft./sec.
18.	Time from Release to 12 in. Travel	0.1449 sec.
19.	Velocity at 11-15/16 in. Travel from Release	10 ft./sec.

Note: Items 16 thru 19 are calculated assuming that all resistances to the fall of the rod are negligible.

Tabulated Data on the Motion of the Safety Rod in Falling From its Uppermost Position

Falling Distance (inches)	Velocity (ft/sec)	Acceleration (ft/sec^2)	Time (sec)
0	0	5.525 g	0
1/4	2.674	5.145 g	.0154
1/2	3.712	4.769 g	.0219
1	5.258	3.872 g	.0329
2	6.562	2.507 g	.0456
3	7.243	g	.0576
4	7.602	g	.0688
5	7.945	g	.0795
6	8.274	g	.0898
7	8.590	g	.0997
8	8.895	g	.1092
9	9.190	g	.1184
10	9.476	g	.1273
11	9.753	g	.1360
11-15/16	10.006	g	.1439
12	0	-g	.1449

The above data are calculated using 23 pounds as the rod weight and 104 pounds as the initial spring force. All frictional resistances to the fall of the rod are negligible and are omitted from the calculations of this data.

4.5 Effectiveness of HRE Control Plates

The reactivity controlled by the HRE control plates in both heavy and natural water was calculated using two-group diffusion theory.

Without considering the core vessel, the reactivity with 48.73 g of uranium per kg. of H_2O and a heavy water reflector is,

$$K_{eff} = 1.02417$$

The presence of the steel core vessel lowers this reactivity approximately 4% and subtracting this fraction, the net reactivity becomes,

$$K_{eff} = 0.98417$$

The reactivity of the reactor with the core completely surrounded by a shell that absorbs all thermal neutrons but no fast neutrons

was calculated letting the fast flux go to zero at the reflector boundary and the thermal flux go to zero at the core boundary

$$K_{eff} = 0.89632$$

$$\Delta K_{eff} = 0.98417 - 0.89632 = 0.08785$$

The fraction of core surface blanketed by the two safety plates is $\sim$0.328. Assuming that the effectiveness of the plates is proportional to the fraction of core surface area which they blanket, their effect is

$$\%K_{eff} = 0.328 \times 0.08785 \times 100 = 2.88$$

for both plates, or 1.44% per plate.

A similar calculation for the natural water reflected reactor at 52.90 g of uranium per kg of H_2O (42 g/l) gave the result of 1.31% K_{eff} per plate. These results are in surprisingly close agreement.

4.6 Heat Generation in the HRE Control Plates

The absorption of a thermal neutron by the boral in the control plates gives rise to 3 Mev. of heat energy by the reaction $_5B^{10}(n,\alpha)_3 Li^7$. Assuming that the neutron flux distribution is not altered by the presence of the plates and that the plates absorb all incident neutrons, the number of absorptions per cm^2 - sec. is approximately $\phi/2$. At 1000 Kw, the flux at the core surface is 1×10^{13} neuts/cm^2-sec., which generates 2.4 watts/cm^2 or 7570 Btu/hr-ft^2 of heat in the plates.

The total heat generated in the plates if they are dropped during shutdown was determined by numerical integration of flux times heat generation per unit flux, over the shutdown interval, to be about 0.81 cal/cm^2. This results in a temperature rise of 46°C if no heat leaves the rods.

A calculation to determine the maximum temperature developed in the control plate in its down position and the reactor at full power (1000 Kw) was made. This calculation indicates that a maximum temperature of 379°C will be developed, which is well below the melting point of boral.

4.7 Nuclear Instrumentation Thimbles

The nuclear instrumentation consists basically of the various chambers and associated circuits for controlling the reactor proper and several component monitors. Six thimbles are provided through the shielding and reflector pressure vessel in order to insert instrumentation to determine neutron flux levels. The neutron flux level indicators are discussed in detail in report ORNL-1094.

The six thimbles enter the reflector vessel at an elevation of 8 in. below the center line of the sphere. By entering at this elevation, the thimbles are always covered by the reflector, and, also, this location does not interfere with the control plates and internal piping of the reactor. The wall thickness of the thimbles was selected to conform to the ASME Boiler Code requirement for vessels subject to external pressures of 2000 psi, but the need for minimizing thickness from the thermal neutron absorption viewpoint was also considered. The thimbles are connected to the pressure vessel by a standard 3 in., 1500 psi flange welded to the thimbles and bolted to the pressure vessel.

CHAPTER 5

SAMPLING PROCEDURES FOR THE HRE

5.1 General Discussion of Sampling Requirements

The requirements for the sampling of the fuel solution and reflector fluids were originally proposed during a conference on analytical sampling and procedures for the HRE held on July 18, 1951, and, as presented in the subject memorandum to J. A. Swartout from C. H. Secoy, dated July 31, 1951. This memorandum specifies the analytical requirements for the fuel solution and reflector fluids as follows:

A. Analytical Requirements for the Soup

1. Total Uranium. Sample required, 0.03 ml. This is considered the most important of the determinations.

2. Tetravalent Uranium. Sample required, 0.10 ml. This may not be as significant as pH in the low concentration solutions since the extent of hydrolytic precipitation of U^{IV} will be greater. However, at higher concentrations, pH will be less sensitive and U^{IV}, if being produced, will build up to higher concentration in solution. The minimum detectable amount with a 0.10 ml sample will be about 250 ppm.

3. The pH of the Solution. Sample required, 0.05 ml. The pH has proven a sensitive indicator of the onset of corrosion. The pH determination is the only one which must be made before dilution of the sample.

4. Nickel. Sample required, 0.05 ml. Nickel is the only one of the three major constituents of the stainless steel which remains in solution. Its appearance in solution is, therefore, indicative of corrosion.

5. Presence of Suspended Solids. Uncertainty as to the physical character of solids makes the obtaining of a representative sample by the proposed method somewhat uncertain. The sample can be checked for turbidity, etc., but, the absence of solids in the sample will not necessarily indicate the absence of solids in the HRE system.

6. Fission Products. Sample required, unspecified.

B. Analytical Requirements for the Reflector.

Proposed analytical checks on the reflector include pH, D:H or $D_2O:H_2O$ ratio, determination of Na_3PO_4, and a check on possible uranium pick-up.

C. Analytical Requirements for Off-Gases. These requirements were not discussed in the aforementioned report, but, stations have been provided for gas sampling as may later be designated by the Analytical Group.

In order to obtain the required samples, stations are provided as follows:

(1) A high pressure fuel solution sampler is installed across lines 101 and 103 to and from the main heat exchanger. The operating station is located on the top of the shield just north of the reactor cell.

(2) A reflector sampler is located across lines 157 and 158 to and from the reflector pulsafeeder pump heads. This sampler is operated at the pulsafeeder pit.

(3) Fuel solution off-gas sampler stations are located in lines 137 and 140 into and out of the charcoal adsorbers.

(4) Reflector off-gas sampler stations are located in lines 168 and 169 to and from the charcoal adsorbers.

(5) A sampler station located at the waste evaporator obtains samples from the feed-tank and evaporator proper.

(6) The helium pressurizer system is provided with three sample taps. These are in lines 166 and 172 to and from the catalytic recombiner, Item 96. There is also one helium sampler station in line 270 on the low pressure side of the system. The helium system taps lead to the top of the shield for access.

In general, the off-gas sampler stations are located externally to the building near the exhaust stack. All gas samples are to be obtained in standard receivers. Special shielded carriers are provided for the liquid samples.

5.2 High Pressure Soup System Sampling Apparatus

The extremely difficult conditions encountered in taking a sample of solution from the high pressure, high temperature and high level activity fuel system were recognized in specifying the following sampling procedure as the basis of design for the sampling device:

(1) Approximately 30 cc of the soup shall be isolated.

(2) The pressure and temperature of the isolated material shall be adjusted to a standard condition -- preferable one atmosphere and room temperature. The gas from the

sample shall be discarded, and the loss of water vapor shall be minimized by cooling before gas is released.

(3) By remote operation, the isolation chamber shall be opened, and approximately 0.5 ml of solution removed to a shielded conveyor. The conveyors shall bring the sample out through a suitably designed opening in the pile shield and hence to the analytical laboratory.

(4) The sample shall be weighed in the laboratory, the sample diluted to an appropriate volume and aliquots taken for the various analytical procedures.

The memorandum report CF 51-7-177 (Conference on Analytical Sampling and Procedures for the HRE, July 18, 1951) proposes that the sample be taken in the high pressure zone ahead of the letdown condenser. An alternate proposal was to locate the isolation chamber below the letdown valve in the low pressure zone. It was decided that a sample taken from the low pressure zone would not be representative of the reactor solution. Therefore, the final decision was to utilize the pressure differential existing between the inlet and outlet nozzles of the main heat exchanger to isolate the 30 cc of sample required. Figure 5.2A thru 5.2C show schematically the system as finally evolved and as designed for removing the sample from the reactor alone. Twenty-four drawings are required to adequately describe this system. Following is a list of the drawings required:

	Description	Dwg. No.
1.	Soup Sampler - Location and General Piping	D-10326
2.	Soup Sampler - General Assembly	D-10327
3.	Soup Sampler - Housing Assembly	D-10328
4.	Soup Sampler - Housing Plug Assembly	D-10330 C-10348 C-10349 C-10329
5.	Soup Sampler - Manipulator Assembly "C"	D-10331 D-10332 D-10333 D-10334
6.	Soup Sampler - Sample Carrier	D-10335
7.	Soup Sampler - Sampler Carrier Shield	D-10336

Dwg. 16226
Unclassified

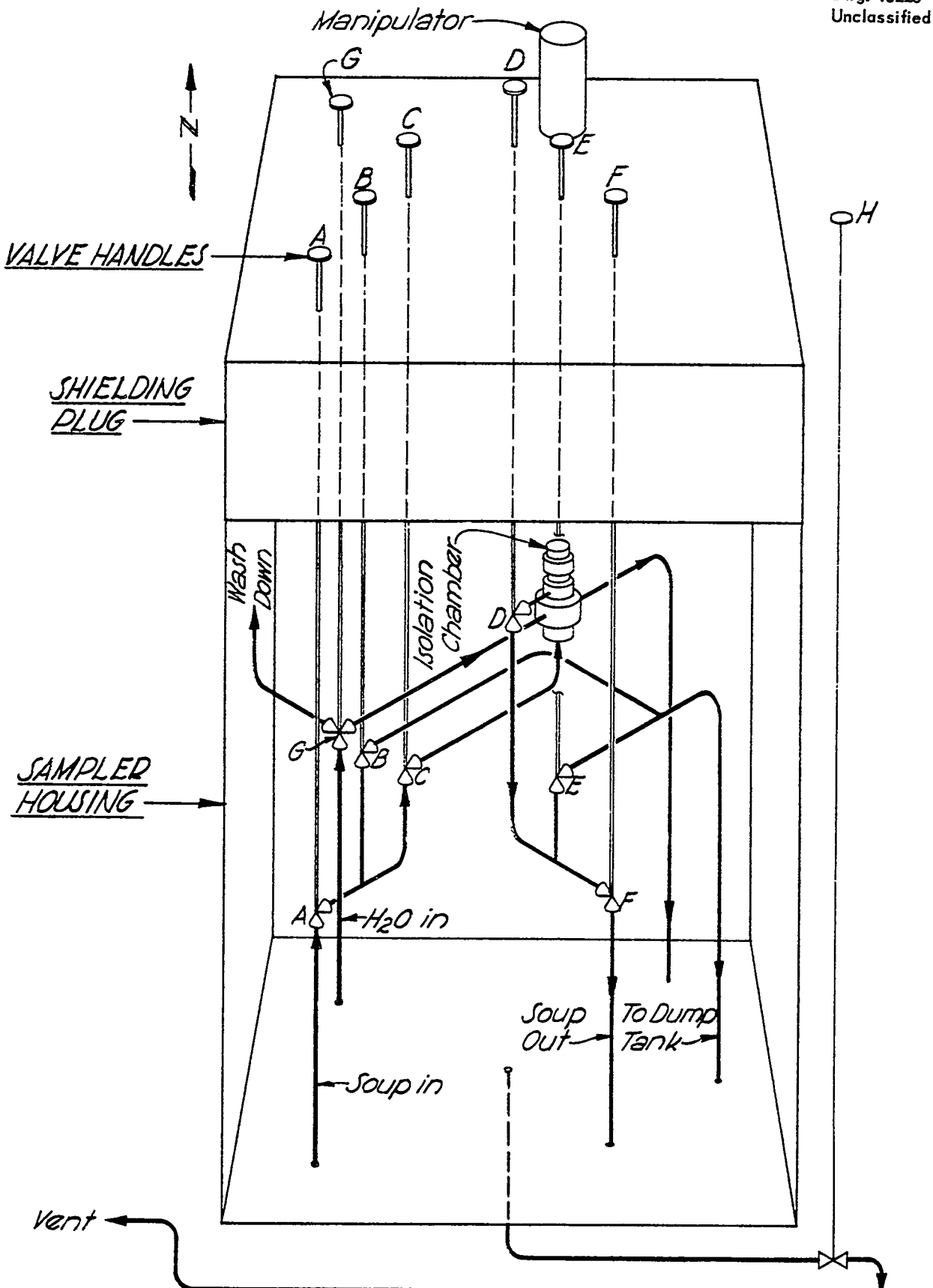

FIG. 5.2A FLOW DIAGRAM AND VALVE RELATION SOUP SAMPLER

Dwg. 16227
Unclassified

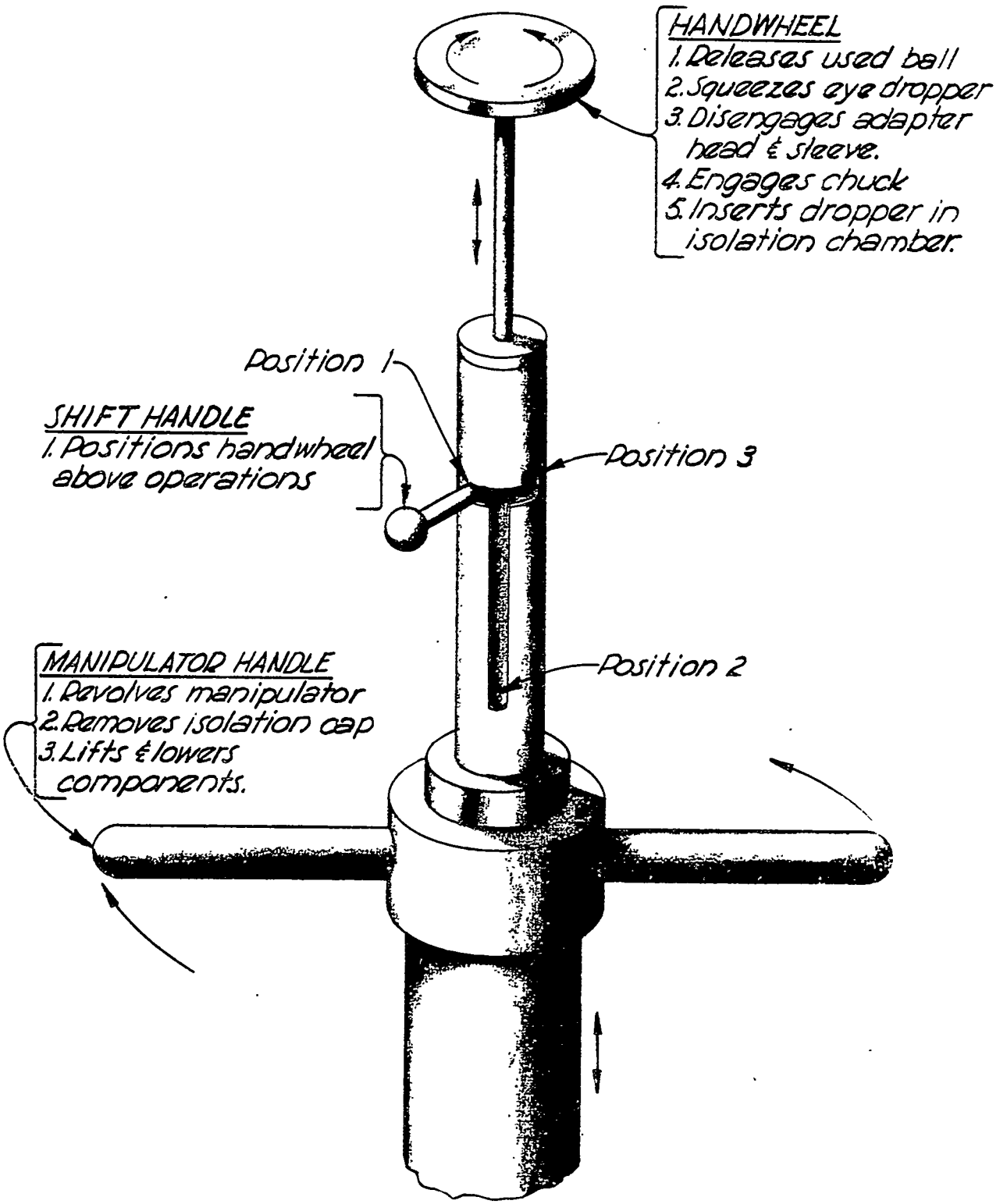

FIG. 5.2B MANIPULATOR CONTROLS

Dwg. 16228
Unclassified

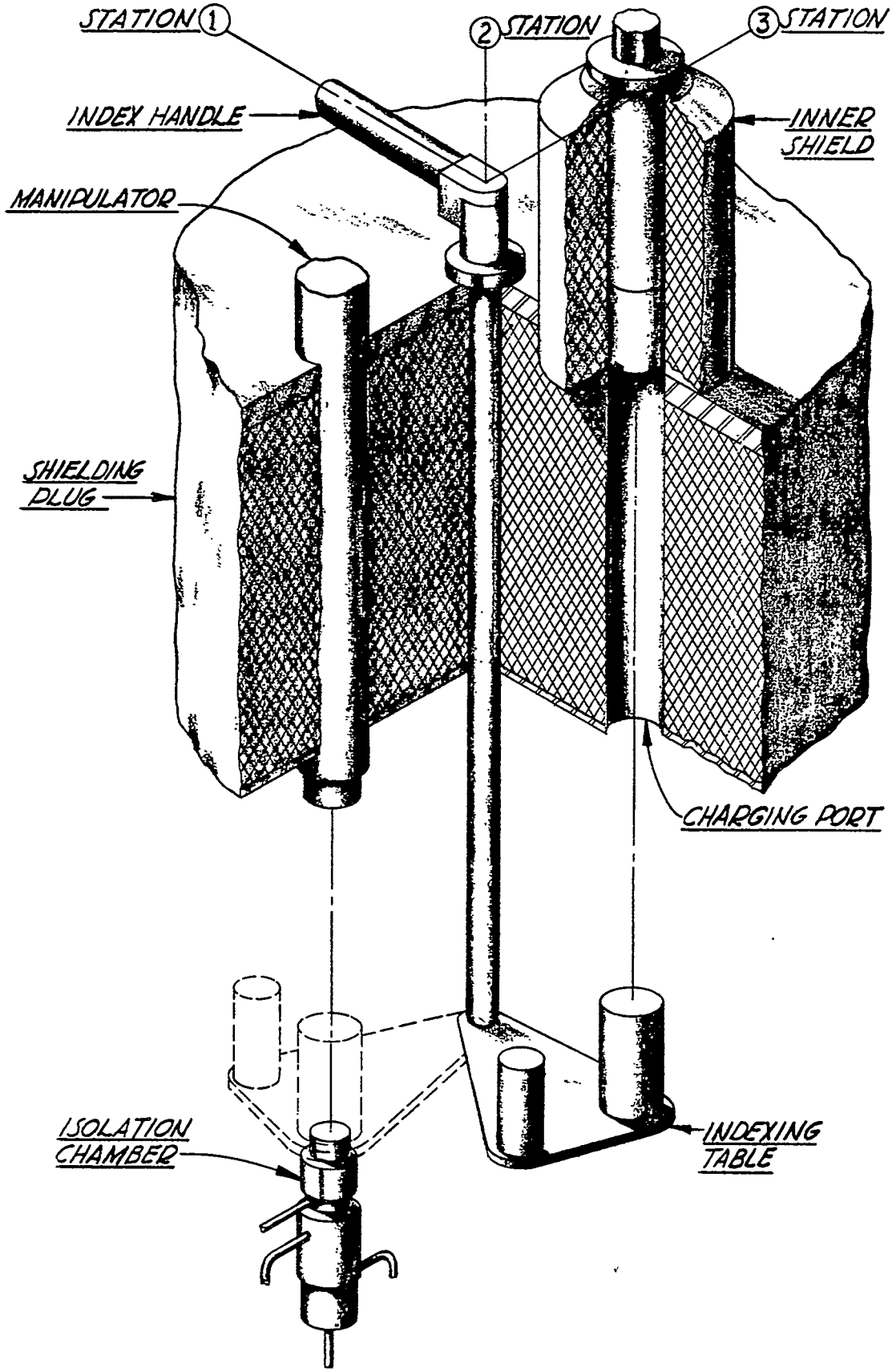

FIG. 5.2C RELATION OF INDEXING MECHANISM TO CHARGING PORT & MANIPULATOR

8.	Soup Sampler - Locator and Index Table	D-10338 D-10339
9.	Soup Sampler - Lifting Tool	D-10340
10.	Soup Sampler - Isolation Chamber	D-10341
11.	Soup Sampler - Light	D-10342
12.	Soup Sampler - Periscope	D-10344 D-10345
13.	Soup Sampler - Isolation Valve (Experimental)	D-10346
	Total Drawings	24

Figure 5.2D is an assembly drawing of the high pressure sampling apparatus illustrating the mechanical features of the system. All operations involving extraction of the reactor fluid sample are performed remotely from behind and on top of a 12 inch thick shielding plug. Seven extension valve handles, the manipulator assembly, the indexing shaft, the charging hole and the viewing window extend through this plug. Clearance space around each shaft through the plug is maintained at less than 1/32 inch to minimize radiation streaming through the openings.

The isolation chamber, isolation valves, indexing table and periscope apparatus are housed within a stainless steel sheet metal water-tight box suspended within the top shielding concrete and below the lead barrier. In operation, all components of the apparatus containing soup may, therefore, be flooded with water. With the water and lead combination it will be possible to reduce the radiation dosage to tolerable levels directly above the soup sampler system.

Thickness of Top Plug for Sampler

Assumptions

(1)	Radiation dosage at surface of plug	0.01 R/hr
(2)	Soup is assumed concentrated at one point approximately 19 inches below the bottom of the plug	
(3)	Volume of soup in sampler	100 cc
(4)	Gamma flux yielding 0.01 R/hr	5.3×10^3 Mev/cm^2-sec.
(5)	Source strength at 1.17×10^{12} Mev/cm^3-sec	1.17×10^{14} Mev/sec

Y-12 Photo 11638

[redacted]

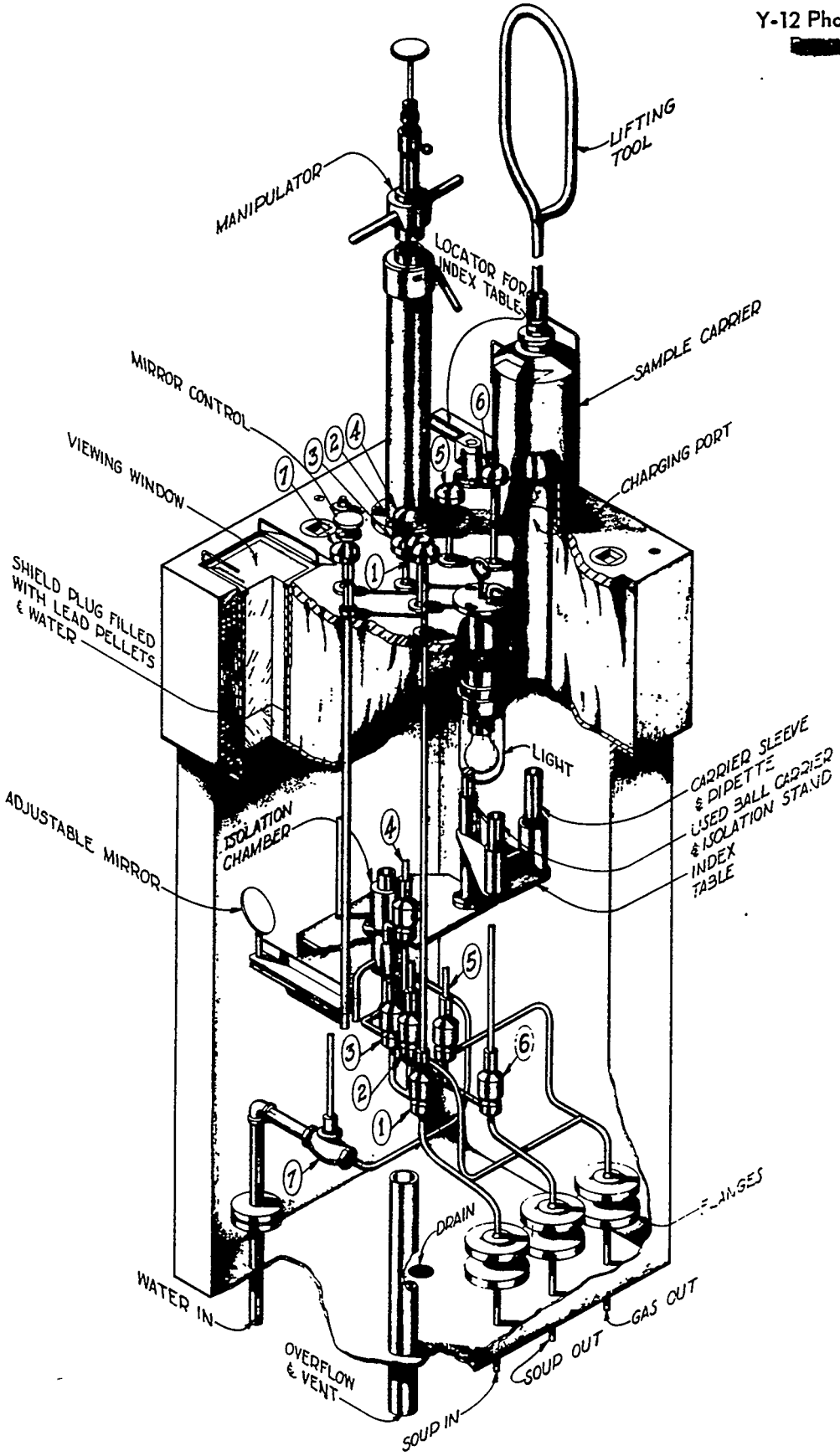

FIG. 5.2D

SOUP SAMPLER

(6) Adsorption coefficient of lead for 1 Mev gammas 0.52 cm^{-1}

(7) Attenuation of gamma rays follows the exponential law

Calculated thickness of lead required 11 inches

Delayed Neutron Emission from Sampler. The reactor fluid will flow directly from the core tank to the sampler. During this interval, while fluid flows through the system, delayed neutrons are emitted. The magnitude of the problem thus presented may be serious, as shown by calculations based on the following data and assumptions, unless water or the equivalent is used to supplement the lead shielding plug.

Total volume of soup in external system	23,100 cm^3
Volume of soup in sampler	100 cm^3
Total neutrons produced in reactor core	7.5×10^{16} neuts/sec
Total delayed neutrons emitted externally	7.5×10^{13} neuts/sec
Fraction of external volume of soup system taken up by sampler	0.00435
Delayed neutrons emitted from sampler	3.26×10^{11} neuts/sec

From bulk shielding data, the relaxation distance for delayed neutrons through water is 3 cm. The distance from the top of the plug to the approximate assumed center of radiation is $\sim$ 30 inches (76 cm). On first flight, without water, the neutron current from the plug is

$$J = 4.5 \times 10^6 \text{ neuts/cm}^2\text{-sec}$$

or a factor of 20,000 greater than tolerance. With 12 inches of water, the attenuation factor is 4.5×10^{-5}, which reduces the exit fast neutron current to the order of 100 neuts/cm^2-sec.

Fast Neutron Flux from the Reactor. Placing the sampling device in its proposed position just north of the reactor cell removes concrete required for shielding the reactor. A layout was made to determine the weak portion of the shield thus produced. It was found that at least one ray of neutrons from the reactor would be required to traverse only 3 feet 9 inches Barytes concrete, resulting in an exit intensity along this path of 9.8×10^2 neuts/cm^2-sec. without water or the equivalent in the sampler housing. From bulk shielding data, the relaxation length for fission neutrons in water is 8.3 cm, or the same as for Barytes concrete. Therefore, if the sampling facility

is operated with its housing full of water, the equivalent of the concrete removed will be added back, thereby resulting in a shield of the original strength as far as the reactor is concerned.

The procedure for extracting a sample of the reactor solution may be divided into four major processes; (1) the preparation of equipment, (2) the handling procedure, (3) the circulating procedure and (4) the transfer procedure. Table 1 lists the steps required under each of the above processes. Each major process is referenced to one or more of Figures 5.2A thru 5.2E which describes the particular portion of the apparatus required to perform each process.

TABLE I

Sample Extraction Procedure

(1) Preparation of Equipment. Figure 5.2E illustrates the procedure involved in the initial preparation of the sampling equipment preparatory to the lowering of the isolation chamber ball seal, eye-dropper and sample carrier into the sampler housing. As shown, the ball is placed in the carrier chuck with the eye-dropper, and the assembly inserted in the carrier base, which is then lowered through the hole in the inner carrier shield to the sampler housing chamber.

(2) Handling Procedure. With the sample carrier in the sampler housing chamber, Figures 5.2B and 5.2C show graphically the apparatus and controls required to handle the sampler by remote means from the top of the shield. In brief, the handling of the sample is accomplished principally by means of the indexing table and manipulator. All stations on the manipulator and indexing handle controls are marked such that with the aid of a prepared chart the operator will know exactly the position of the internal components. As an additional check and operating aid, a viewing window and tilting mirror are provided.

(3) Circulation Procedure. Figure 5.2A is a diagram of the sampler system showing the relationship of the required valves to the isolation chamber. It is important that these valves shall be operated in the proper order, hence, the aforementioned chart outlines in exact order the proper opening and closing of the valves to safely extract a sample of solution.

(4) Transfer Procedure. With all components in their proper position within the sampler housing and after the sample has been isolated and depressurized, the isolation chamber may be opened, the pipette inserted and the sample taken.

Dwg. 16229
Unclassified

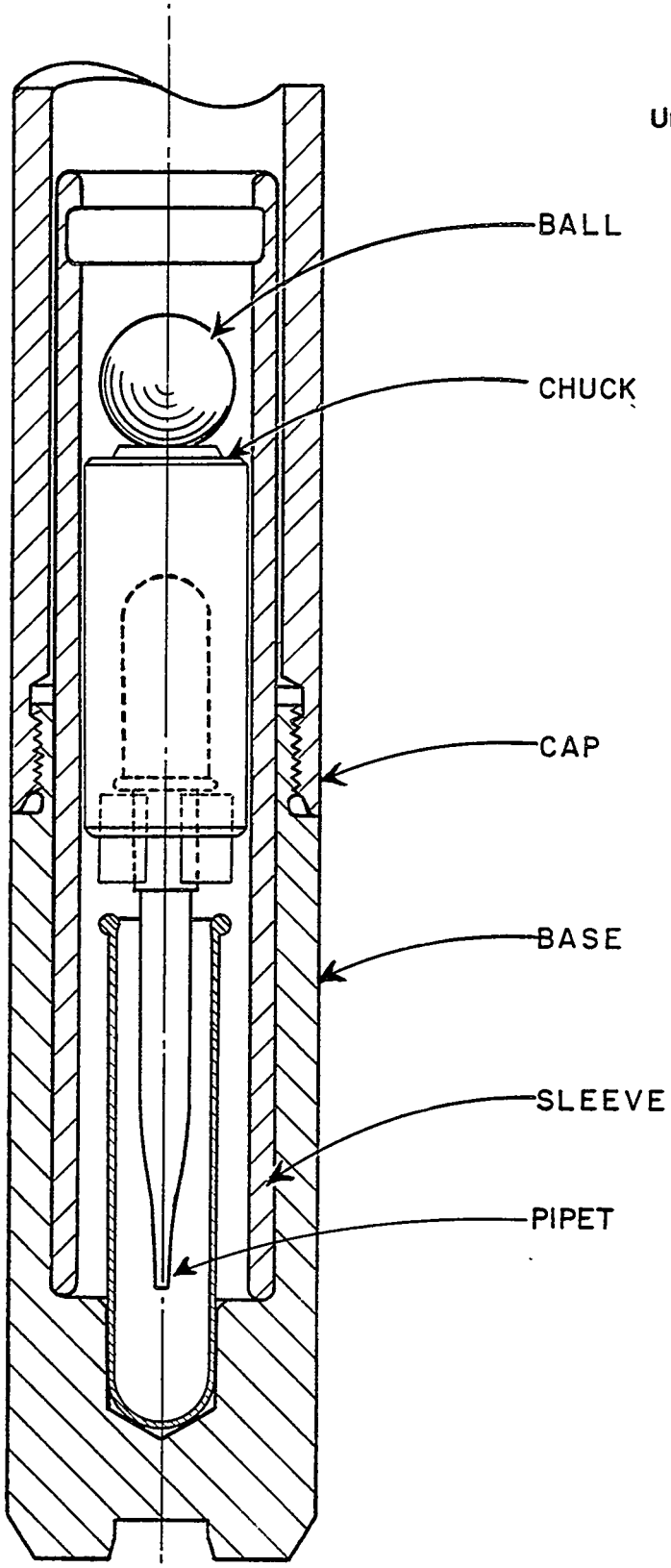

Fig. 5.2E. Sample Carrier for Soup

The sample must then be removed from the sampler housing, transferred to the carrier shield and transported to the Chemical Laboratory. The same equipment used in the --- handling procedure and preparation of equipment, Figures 5.2B and 5.2C respectively, are used to effect this transfer, but in roughly the reverse order.

5.3 Reflector Sampling System

The reflector sample station is located in the pump pit containing the D_2O pulsafeeder heads. By proper procedure this same station may also be used as a means to fill the reflector system. Figure 5.3A shows the general arrangement of piping and connections in this pit to accomplish these functions. A 1/8 inch pipe is connected into each of lines 156 and 158. Line 156 is the low pressure or suction line to the pulsafeeder heads and line 158 is the high pressure discharge line. Both low pressure (514) and high pressure (515) sample lines are provided with isolation valves. Access to this station is obtained by removing the concrete shielding plug over the pump pit after an adequate nuclear cooling-off period has elapsed. A tentative operational procedure for obtaining a representative sample of reflector is outlined in the memorandum report D_2O Sampler with Provision for Filling or Emptying System from French to the HRE file dated November 7, 1951. The precise procedure will be a modified version of this as may be specified by the analytical group.

Tentatively, however, to obtain a sample it is necessary to attach the sample carrier, open its valves, then open the two valves on the high and low pressure pump lines to allow circulation through the carrier. All valves are then closed and the sample removed. Removal of larger quantities of D_2O can be made by extending the high pressure 1/8 inch line to a larger shielded carrier, with perhaps a return line to the low pressure 1/8 inch line. Additions to the system can be made directly to the low pressure line, although it may be more expeditious to use the fill line 763 at the top of the condensers in the D_2O cell.

Figure 5.3C illustrates one type of carrier which may be used for obtaining a 10 cc sample of reflector fluid. Connection of this carrier to the sample lines is achieved by use of a plug and socket quick disconnect coupling similar to those manufactured by the Hansen Manufacturing Company. Both plug and socket are provided with a built-in valve which automatically closes when the coupling halves are separated. Atmospheric contamination of the reflector is thus prevented. The carrier is valved in such a manner as to allow flow of liquid from the high to the low pressure side, thus, flushing the carrier and insuring a representative sample. The carrier is shielded with a minimum of 0.75 inches of lead which calculations have shown to be adequate.

Dwg. 16230
Unclassified

Ref. Dwg.:
Piping Details for Soup & D_2O Pits. Dwg. # 9589

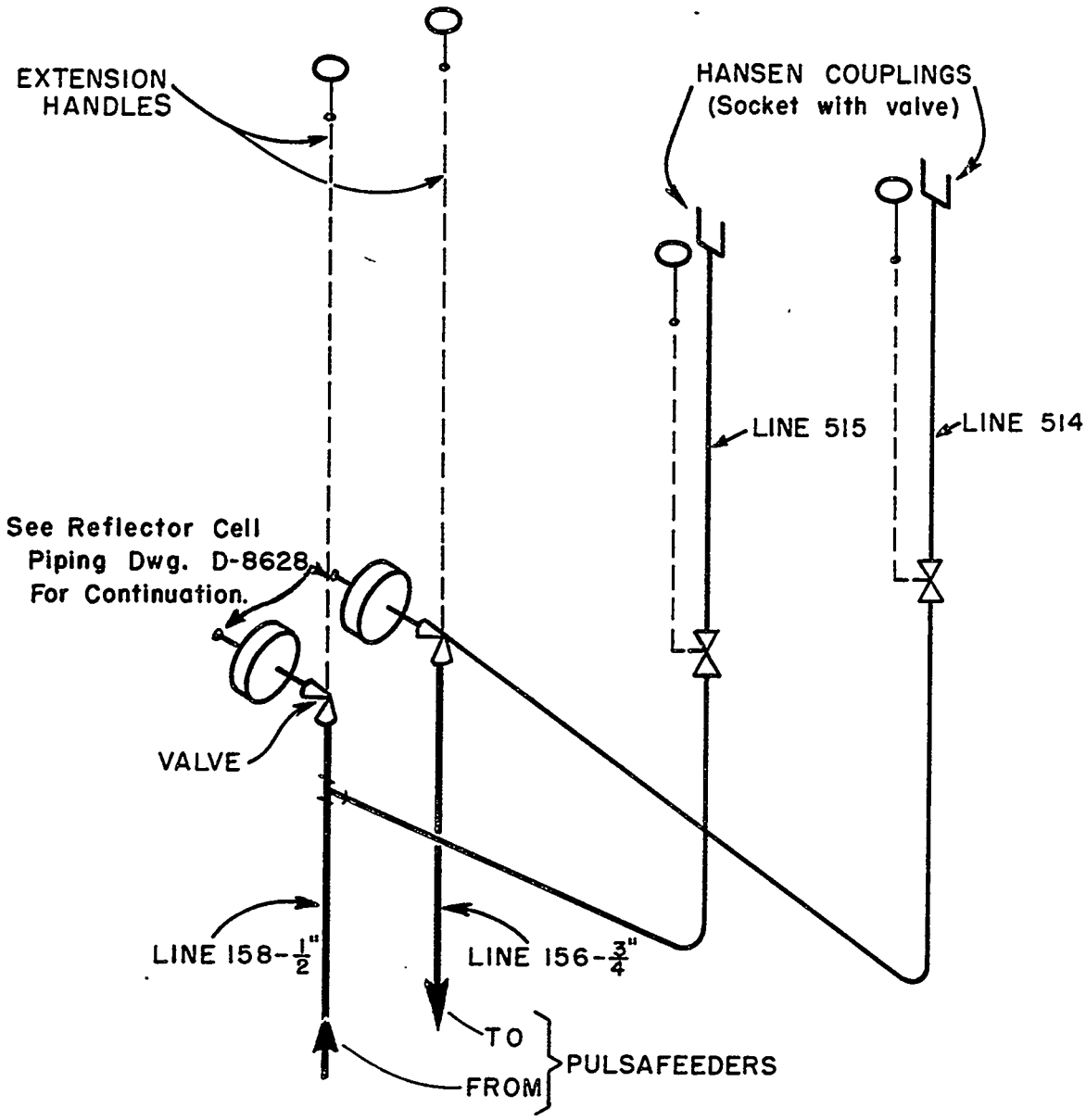

Fig. 5.3A. D_2O Sampler (Schematic Drawing)

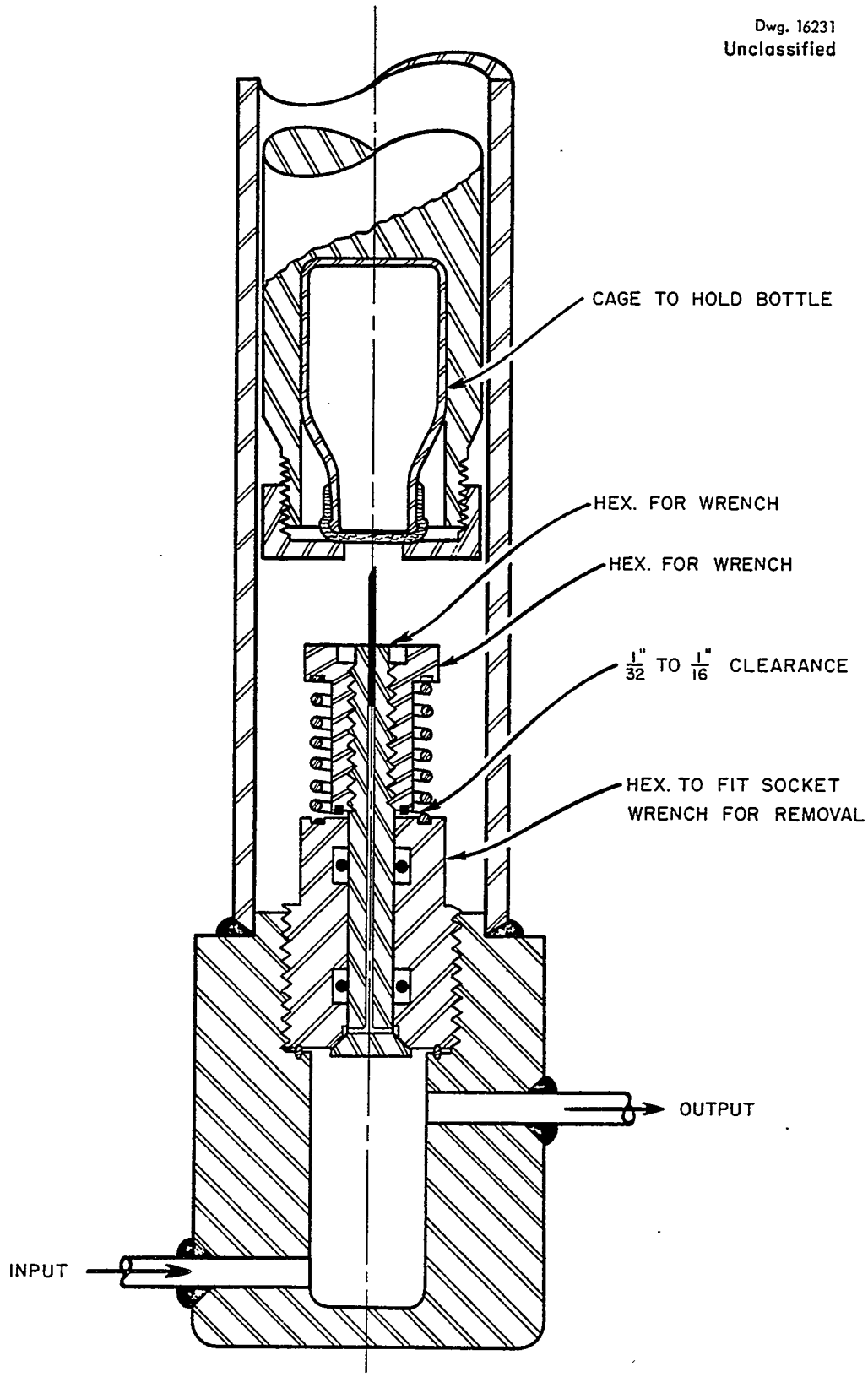

Fig. 5.3B. Alternate Sampling Device

Dwg. 16232
Unclassified

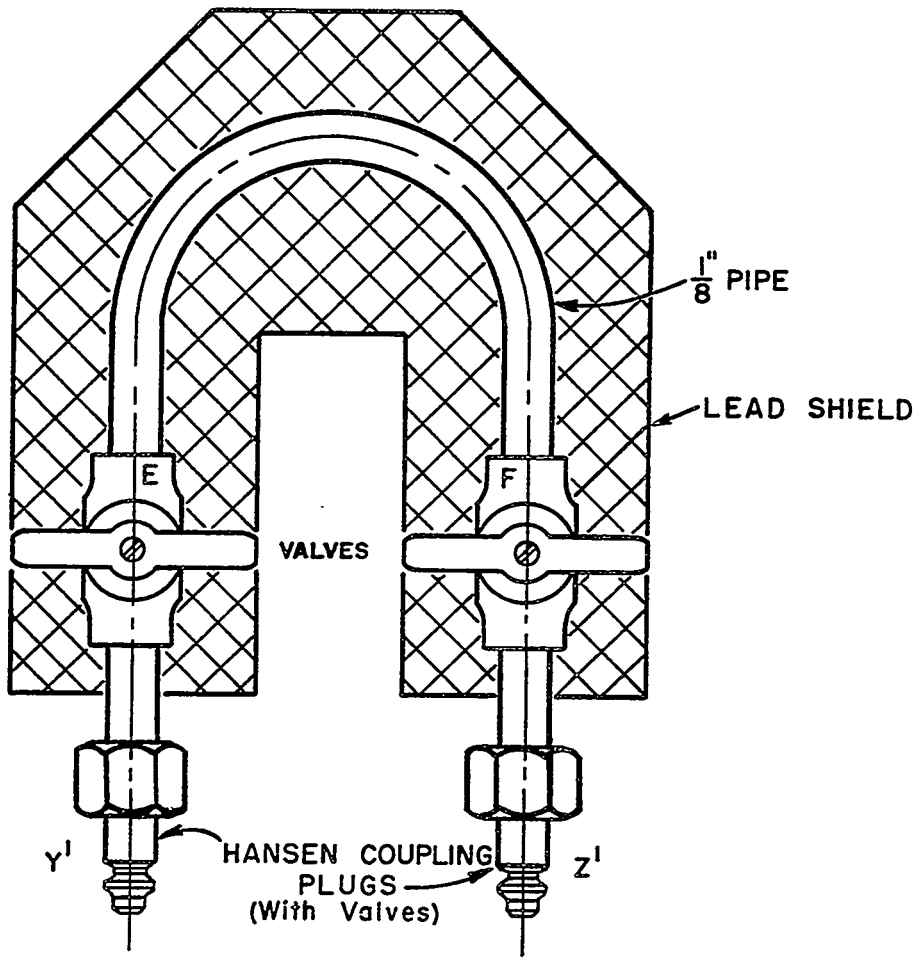

Fig. 5.3C. D_2O Sampler Carrier

Figure 5.3B shows an alternate type of sampling device such as proposed for use on the B.R.E. The idea of an evacuated sampler bottle with a rubber cap which seals after puncturing has proven successful in previous applications. Such sample bottles of various sizes are evacuated by a hypodermic needle and retain as much as 29 in. Hg vacuum for several hours. The design of this device as shown is tentative only, but, in principle, may be made to function as a sampling device for the D_2O as follows:

The isolation chamber, which may be constructed to hold as much fluid as may be specified by the analytical group, is connected by 1/8 inch stainless steel piping between lines 156 and 158. This chamber and piping may be shielded such that when the pulsa-feeder pit shielding plug is removed, the operator will still be protected. The cage for holding the bottle is a part of and contained within the shielded sample carrier and container. The vertical pipe is merely a guide pipe which terminates in a platform just under the pit shielding plug. An auxiliary transport carrier may be placed on this platform into which the D_2O sample may be withdrawn if necessary. The cage with evacuated bottle is quickly lowered through the guide pipe and held in position under pressure to operate the sampling valve and puncture the diaphragm in the sample bottle. This bottle should immediately fill to any desired level as decreed by the amount of vacuum in the bottle. The bottle is then quickly drawn upward, closing the spring loaded valve and withdrawing the hypodermic needle from the self-sealing diaphragm.

5.4 Off-Gas Samplers

Sampling stations are provided to obtain samples of gas from the fuel solution system, the reflector system, the waste-evaporator system, and the helium system. The apparatus and procedures for obtaining a sample from any of these systems are similar. Figure 5.4A is a schematic diagram of the method whereby a sample of gas from the high-pressure helium system is obtained. Figure 5.4B shows two possible types of sampler carriers. This system is presented as typical of the techniques recommended.

The connection of the sampler with the helium system is made through quick disconnect couplings of the Hansen type. These couplings were selected for their ease of operation and, also, the valved socket provides an additional block against leakage. After the sampler is coupled into the system it is purged by opening the valves and allowing the helium to flow to line 150 and, hence into the dump tanks. Upon completion of the purge, the downstream side of the carrier should be valved off and the sample brought up to the required pressure. All valves are then closed and the carrier removed.

Dwg. 16233
Unclassified

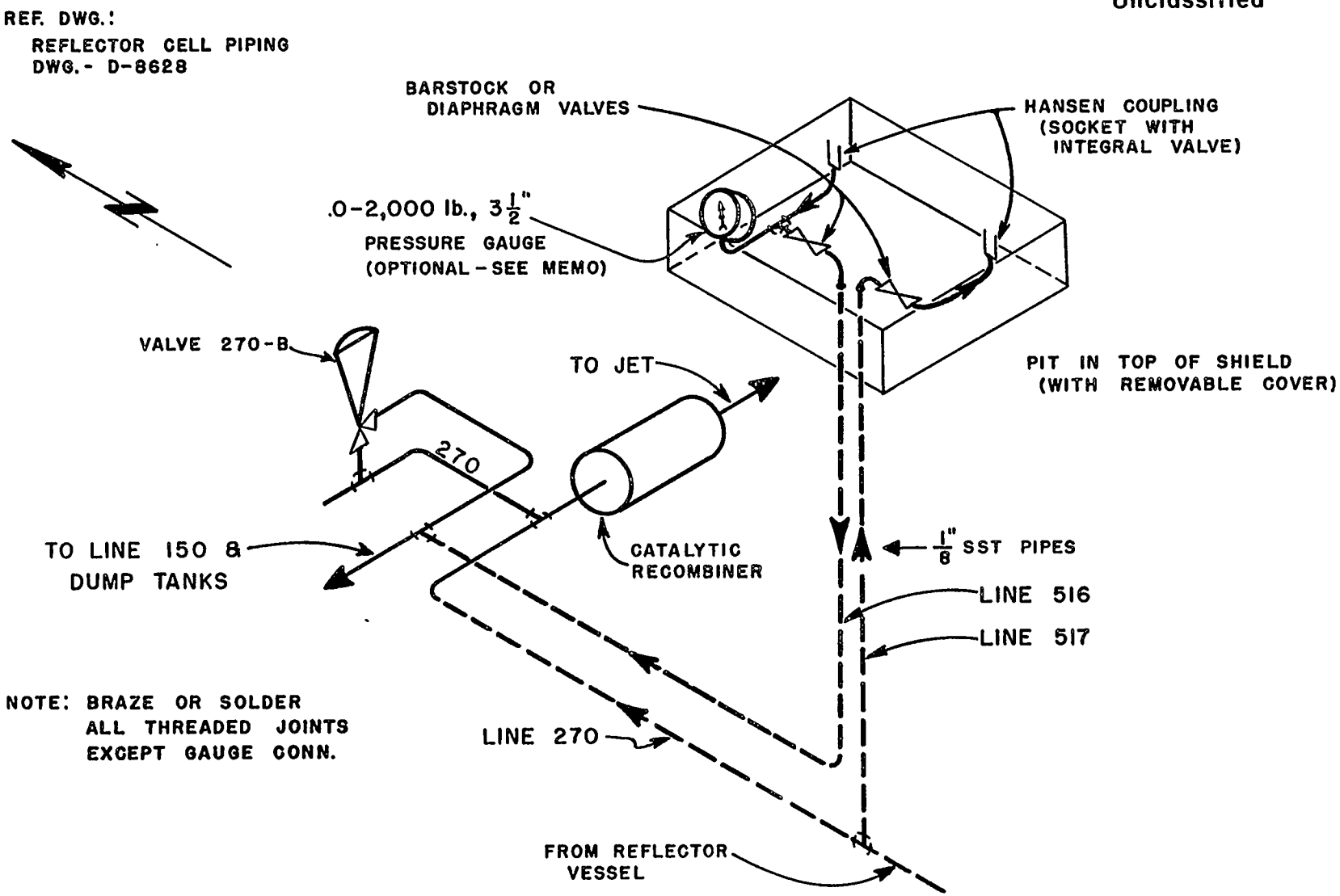

Fig. 5.4A. Sampler for High Pressure Helium

Dwg. 16234
Unclassified

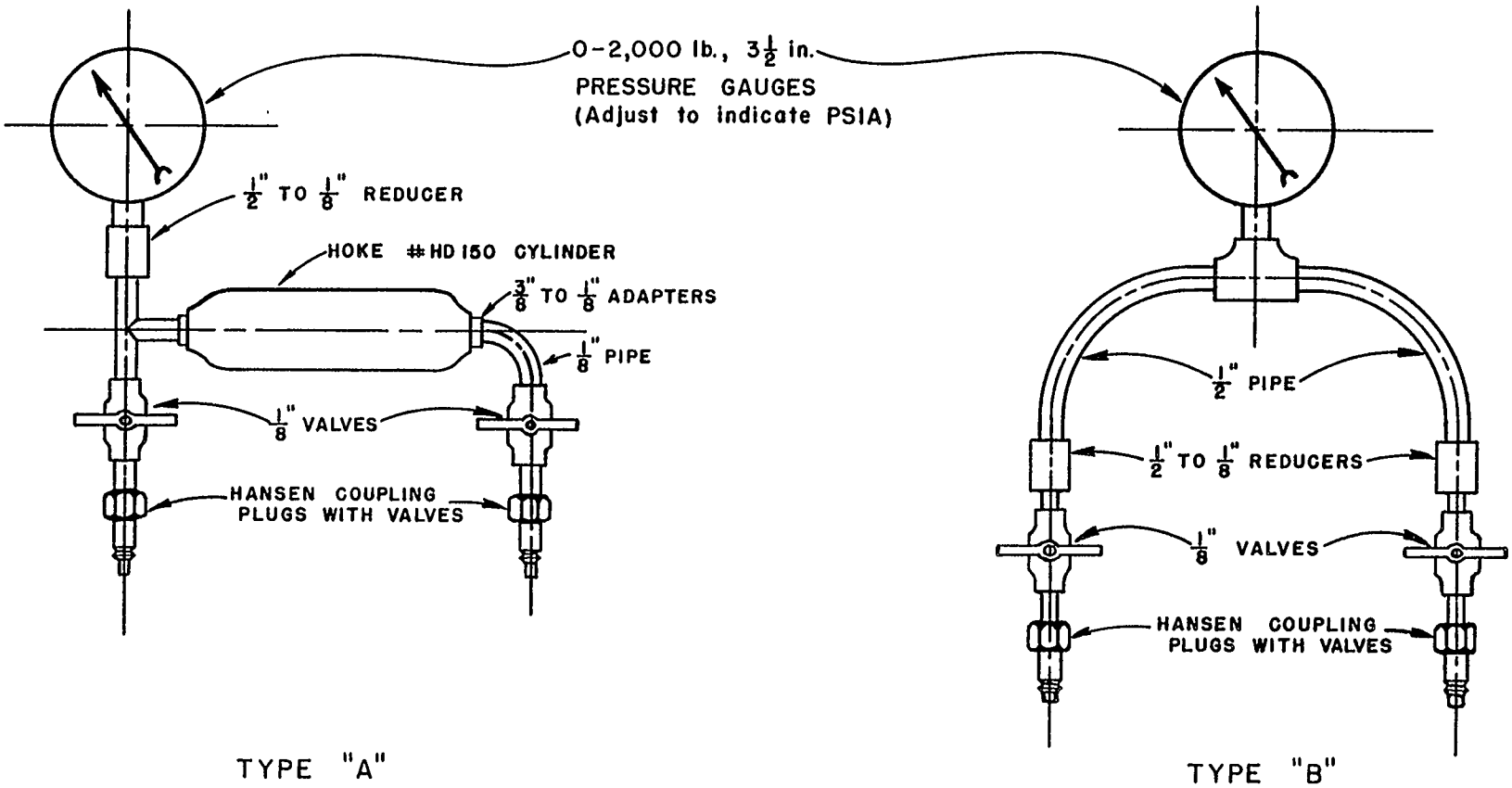

NOTES: 1. All valves shown may be bar stock or diaphragm valves.
2. Braze or hard solder all threaded joints except gauge connection.

Fig. 5.4B. Sample Carriers for High Pressure Helium

The carriers are shown equipped with a pressure gauge of suitable range, adjusted to read absolute pressure. Such an adjustment allows a reasonable indication of vacuum since the carriers should be evacuated before use. This procedure helps to prevent the insertion of an unpurged carrier into the system.

5.5 Chemistry Laboratory Sampling Apparatus

An apparatus is provided as an attachment to the north end of the existing laboratory table located against the west wall of the chemistry laboratory in Bldg. 7500 - for the purpose of handling radioactive solutions extracted from the reactor. This apparatus is shown by the pictorial drawing of Figure 5.5A.

Solutions are transported into the laboratory in a shielded carrier on a standard lift-dolly. The carrier is placed under the sampler shield in the line with the unloading port. A handling tool is inserted through the upper loading tube, the small lead shielding block removed and connection made to the exposed upper end of the sampler carrier. The lead brick is then replaced and the sample carrier drawn upward into the shielded cavity where it is then placed in the appropriate receptacle in the turn-table and the handling tool is disconnected remotely. The sample carrier may then be manipulated by the devices provided for this purpose, the sample removed and aliquots taken for analysis.

Dwg. 35785

[redacted]

[redacted]

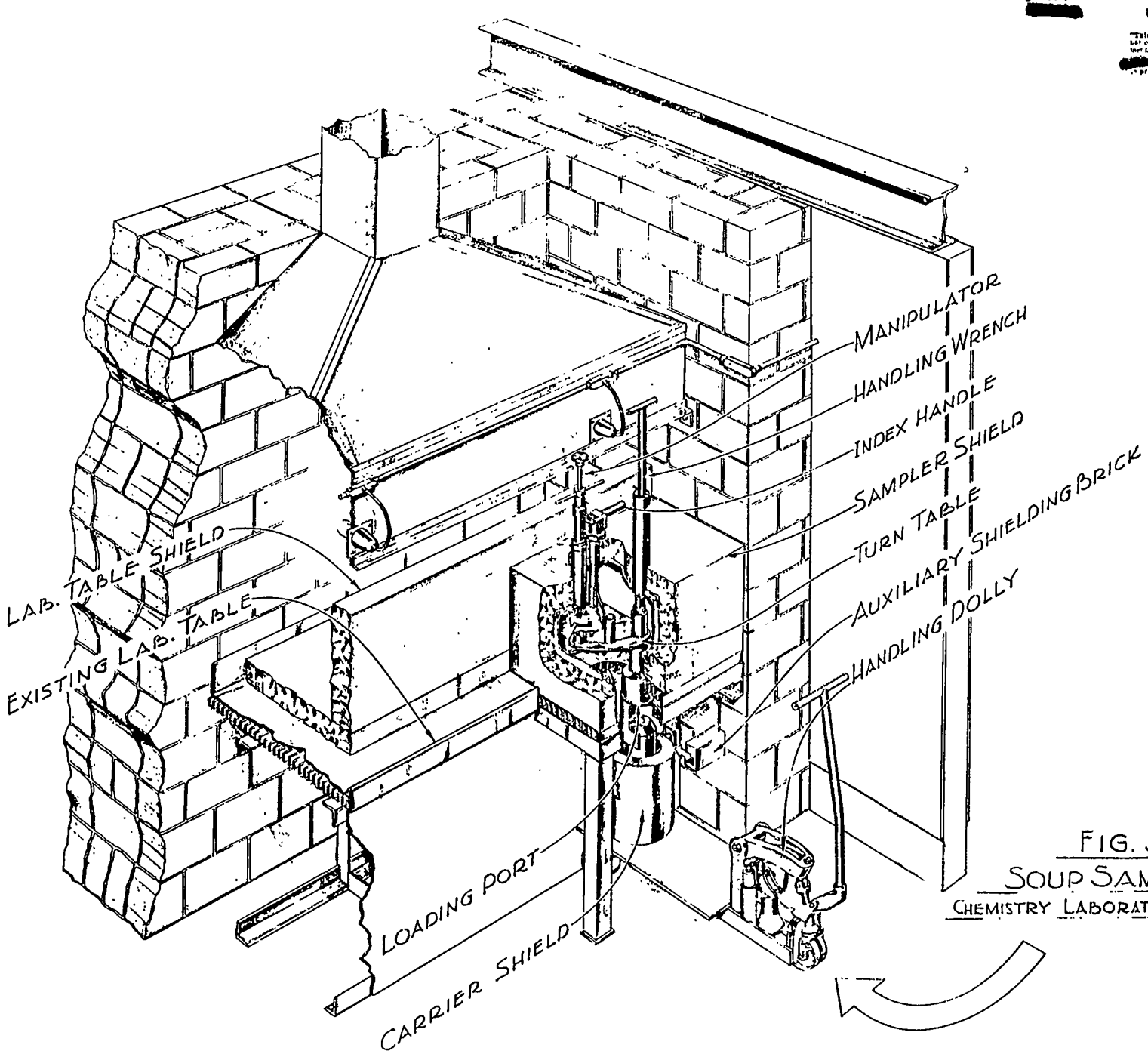

FIG. 5.5A
SOUP SAMPLER
CHEMISTRY LABORATORY APPARATUS

CHAPTER 6

EXPERIMENTAL FACILITIES IN THE HRE

6.1 General Discussion of HRE as an Experiment

The HRE is intended to serve as an experimental pilot model for future reactors of this type. Since it is not designed to serve as a neutron source for experimental work, for radiation testing of foreign materials, or for the production of isotopes, no experimental holes are provided. Introduction or removal of absorbing materials (adjacent to the core) will only be possible by utilizing the control rods and the ionization chamber instrument thimbles. In general, experiments on the reactor will be for the purpose of checking actual operation with predicted operation -- the most important of which are:

1. Heat transfer coefficients;
2. Temperature coefficient of reactivity;
3. Power (gas) coefficient of reactivity;
4. Effect of variables on gas evolution, such as temperature, pressure, and probably catalysts;
5. Comparison of reflector level vs. soup concentration as a method of shimming;
6. Effects of temperature and time upon chemical and radiation stability of soup;
7. Making a system heat balance.

Design values of the HRE have been based on an operating goal of 1000 KW at 250°C and 1000 psi, however, a large part of the information which can be obtained under these conditions can also be obtained by operation at lower power, temperature, and pressure. In fact, if the reactor experiments are performed at the lower values, and for some reason it is impractical to go on to the final level, the HRE can still be considered highly successful.

Operation of the HRE will give answers to the problems of control stability which would be almost impossible to obtain by component research. HRE researches are focused toward assuring feasibility rather than toward finding the very best answer to particular problems. Two major feasibility questions regarding the HRE are 1) corrosion at operation conditions (250°C) by active soup, and 2) stability of reactor solutions at required U-concentrations.

The primary objectives of the HRE are as follows:

1. To demonstrate the operational feasibility of a circulating fuel reactor at fairly high power level.

2. To determine radiation decomposition and corrosion behavior at power densities similar to those required in a large scale plutonium or power-neutron producer.

3. To obtain operational experience in the handling of a circulating, homogeneous reactor fuel system.

4. To produce useful electrical power.

Feasibility of circulating fuel homogeneous reactors must be demonstrated by an experiment such as the HRE in order to justify proceeding with a large scale development program leading to construction of full scale homogeneous reactors for the production of fissionable materials and/or power.

6.2 Instrument Holes, Plugs and Thimbles

1. Instrument - Holes and Thimbles

PURPOSE

To provide openings within the reactor shield and reflector vessel in which ion and fission chambers can be placed for control and safety purposes.

DESCRIPTION

As shown in Figure 6.2A there are six horizontal instrument holes; two running N and S and four approaching the reactors with their centerlines at an angle of 22°-30' from the E-W centerline of the reactor.

Each liner is made of a section of 4" schedule 40 pipe with a tapered cone insert in one end and a 2' - 9 3/4" long 5 1/4" OD x 3/16" wall pipe section on the other, followed by a 12" square x 3/8" thick flange. All thimbles are made of a 16 11/32" long section of 3 3/4" OD x 0.350" wall boiler tube with a hemispherical head welded to one end and a 3" - 1500 lb. ASA welding neck ring joint flange on the other. The flange neck is chamfered at 15°, and the flange itself is bolted to the reflector vessel as shown in Figure 6.2A.

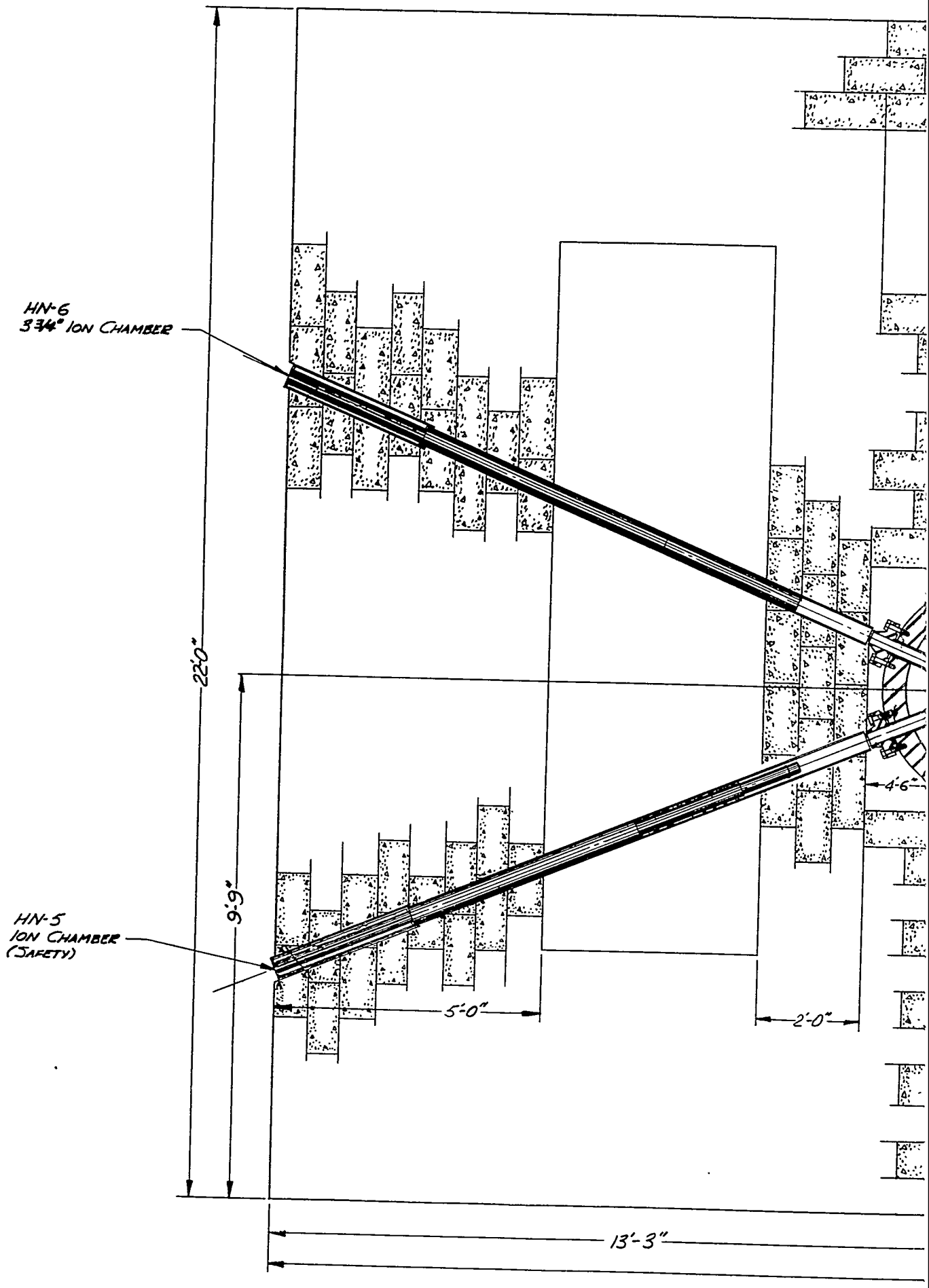
HN-6
3 3/4" ION CHAMBER
HN-5
ION CHAMBER
(SAFETY)
22'-0"
9'-9"
5'-0"
2'-0"
4'-6"
13'-3"

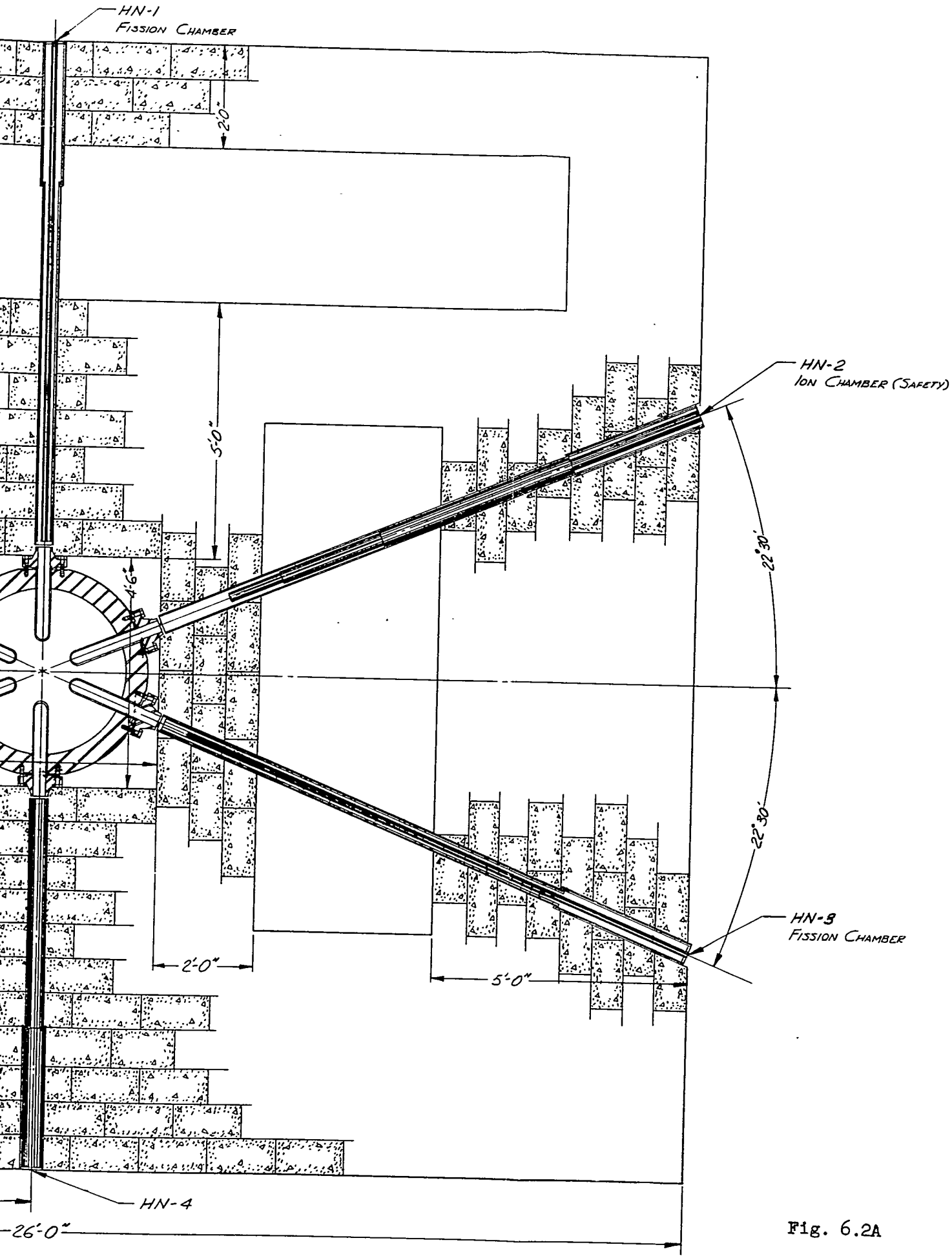
HN-1
FISSION CHAMBER
2'-0"
5'-0"
HN-2
ION CHAMBER (SAFETY)
22°30'
22°30'
4'-6"
HN-3
FISSION CHAMBER
2'-0"
5'-0"
HN-4
26'-0"

Fig. 6.2A

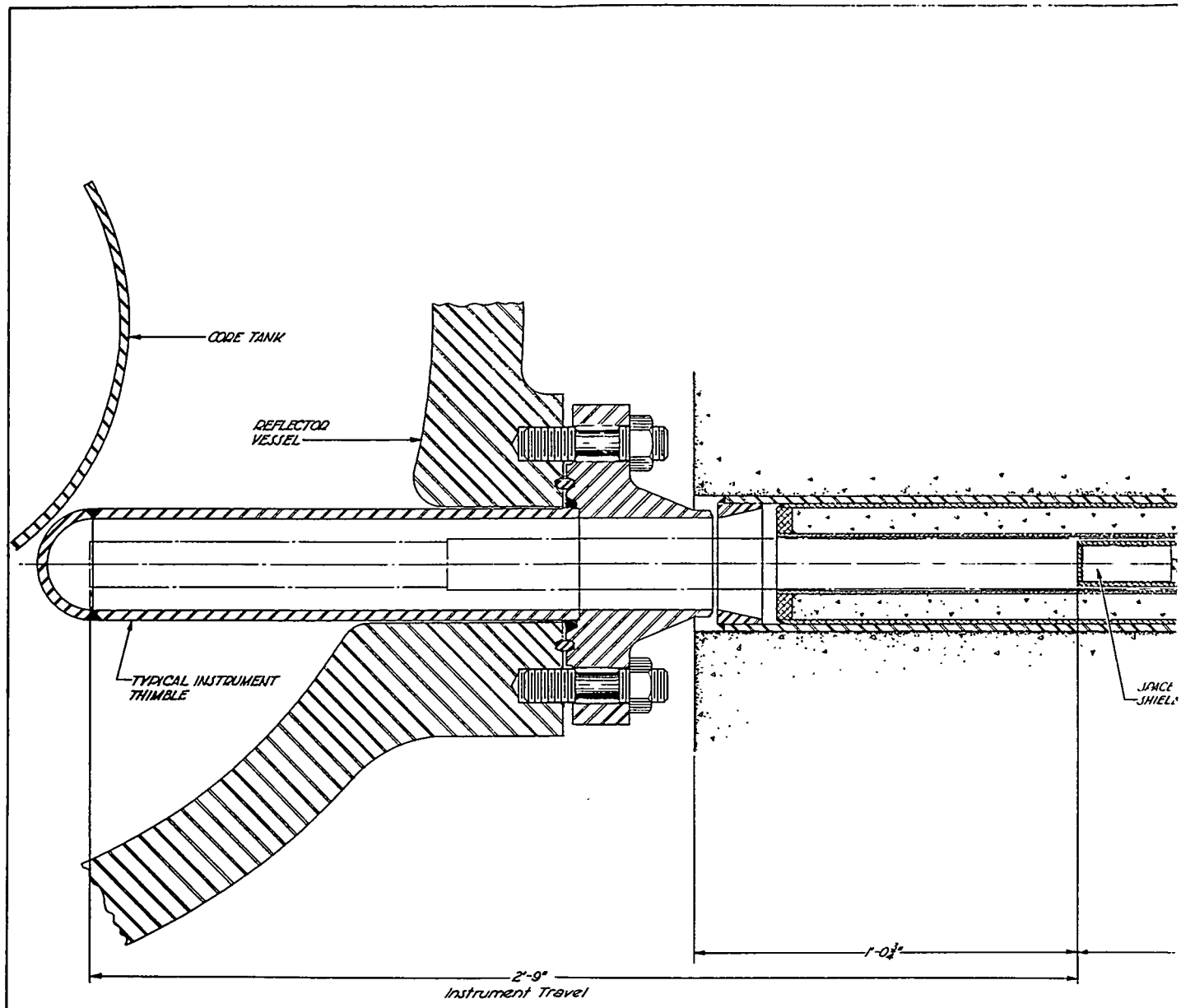
CORE TANK
REFLECTOR VESSEL
TYPICAL INSTRUMENT THIMBLE
SHIELD
1'-0¾"
2'-9"
Instrument Travel

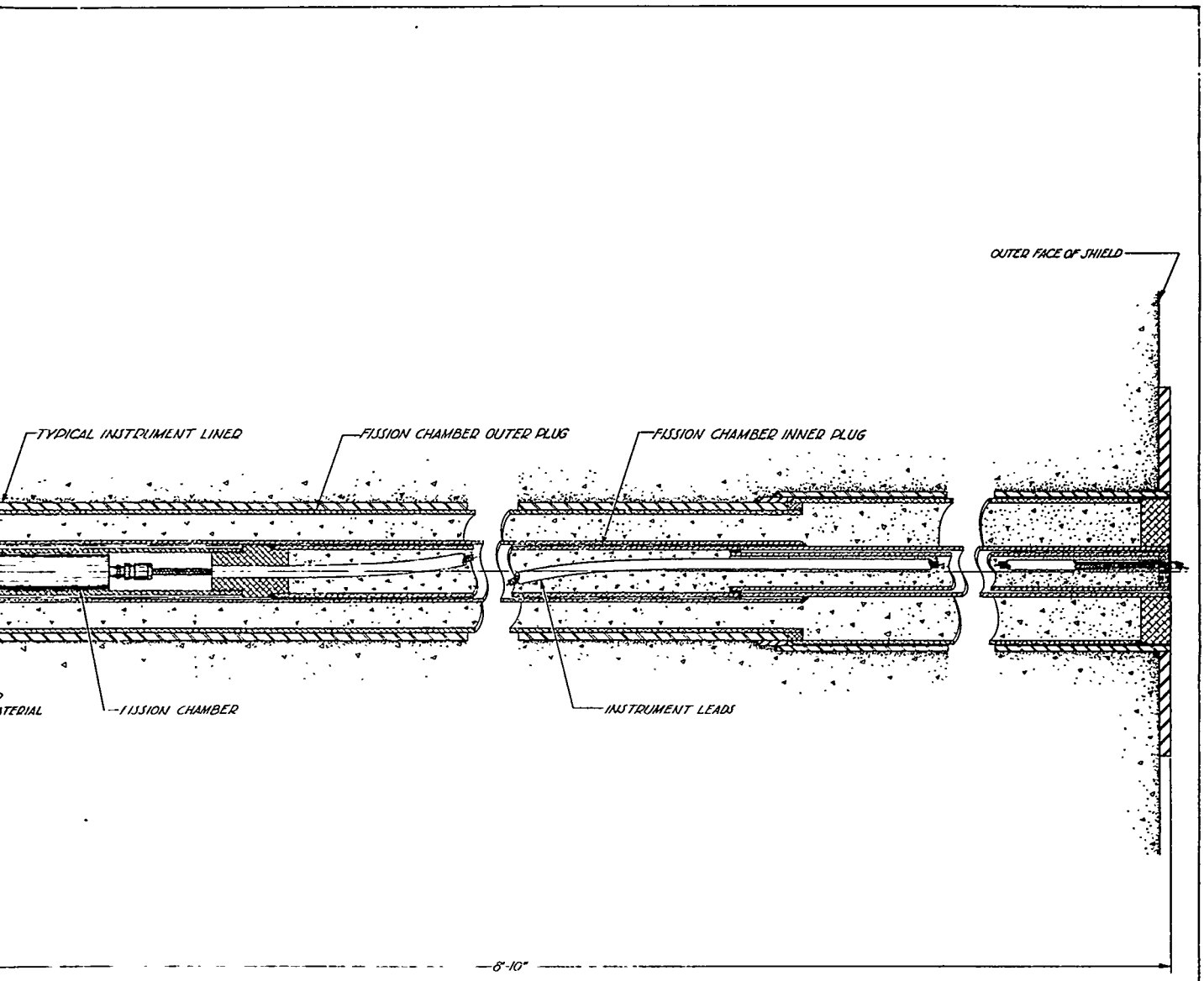

~~OFFICIAL USE ONLY~~

FIG. 6.2B
INSTRUMENT HOLE ASSEMBLY
FISSION CHAMBER & PLUG
HN-1 SHOWN

Drawn: C.W. Day 5-28-51

DWG. NO. E-8312

BASIS OF DESIGN

All liners were made with one step to prevent direct radiation at the shield faces. They were fabricated from carbon steel and are normally fixed within the shield walls. Overall dimensions of the liners were dictated by the size of the instruments.

Six thimbles were designed to withstand an external working pressure of 1000 psi. Hemispherical heads were chosen since this shape has the greatest strength under these conditions. The reflector vessel is fabricated from carbon steel, and therefore the thimbles were also made of carbon steel -- ASTM A-285. Each thimble is independently bolted to the reactor vessel, since no welding operations were permitted after the vessel had been machined.

LOCATION

As shown in Figure 6.2A, the liners extend from the outside surfaces of the reactor shielding to the thimble flanges which are bolted to the reflector vessel at an elevation of 1'-10" above floor level (830 ft), or 8" below the center of the reactor core tank.

REFERENCES

Both the thimbles and liners were fabricated and installed as per the following ORNL drawings.

D-8960	Instrument Holes - Horizontal Section
D-8961	HN-1, 3 and 4 General Assembly
D-8967	HN-2 and 5 General Assembly
D-8968	HN-6 General Assembly
D-8959	Instrument Thimble Detail
D-9582	Spherical Pressure Vessel
D-8952	N-S Instrument Holer-Liner Detail
D-8953	E-W Instrument Holes-Liner Detail
E-8312	Instrument Hole Assembly

2. Instrument Plugs

PURPOSE

To provide adequate shielding in the annular space between the liners and the instruments or between an instrument and the reactor faces.

DESCRIPTION

Each plug or plugs, as the case may be, is adequately described in its respective drawing as listed in the references. The liners and plugs are numbered from one to six starting at the north end of the reactor and proceeding clockwise when viewed from above.

Essentially each plug consists of Barytes concrete canned in steel or aluminum jackets with provisions for cable connections from the reactors faces.

BASIS OF DESIGN

All instrument plugs were designed to accommodate the fission and ion chamber instruments and to replace as much of the shielding material as possible. Spiraled conduit was incorporated to accommodate instrument lead wires. The majority of the plugs are fabricated from aluminum (because of induced activity), however, some of the outer plugs were made of carbon steel since they are far removed from the core.

Figure 6.2A shows the instrument plugs in their fully retracted normal operating position, and Figure 6.2B is an Instrument Hole Assembly - fission chamber and plug. During start-up and initial testing the instruments can be moved closer to the core (except the 4" compensated ion chambers which are too large to enter the thimble holes).

LOCATION

Each plug is specifically made to fit within a particular instrument hole as shown in Figure 6.2A. The locations of the instrument holes are given in the preceding section.

REFERENCES

D-8951	HN-2, 5 and 6 outer plug detail
D-8954	HN-4, plug detail
D-8955	HN-1 and 3 inner plug detail
D-8956	HN-1 and 3 plug details
D-8957	HN-6 plug detail
D-8958	HN-245 plug details

6.3 Corrosion Study Facilities

Two corrosion - sample retainers will be inserted in the ends of the removable elbow of the line adjacent to the main heat exchanger. The retainer is essentially a split sleeve held together by two rings, one of which has a conical spring section that is compressed by the ring-joint flange faces to prevent vibration. A sample holder and a typical sample are shown in Figure 6.3A. If a velocity of 15 ft/sec

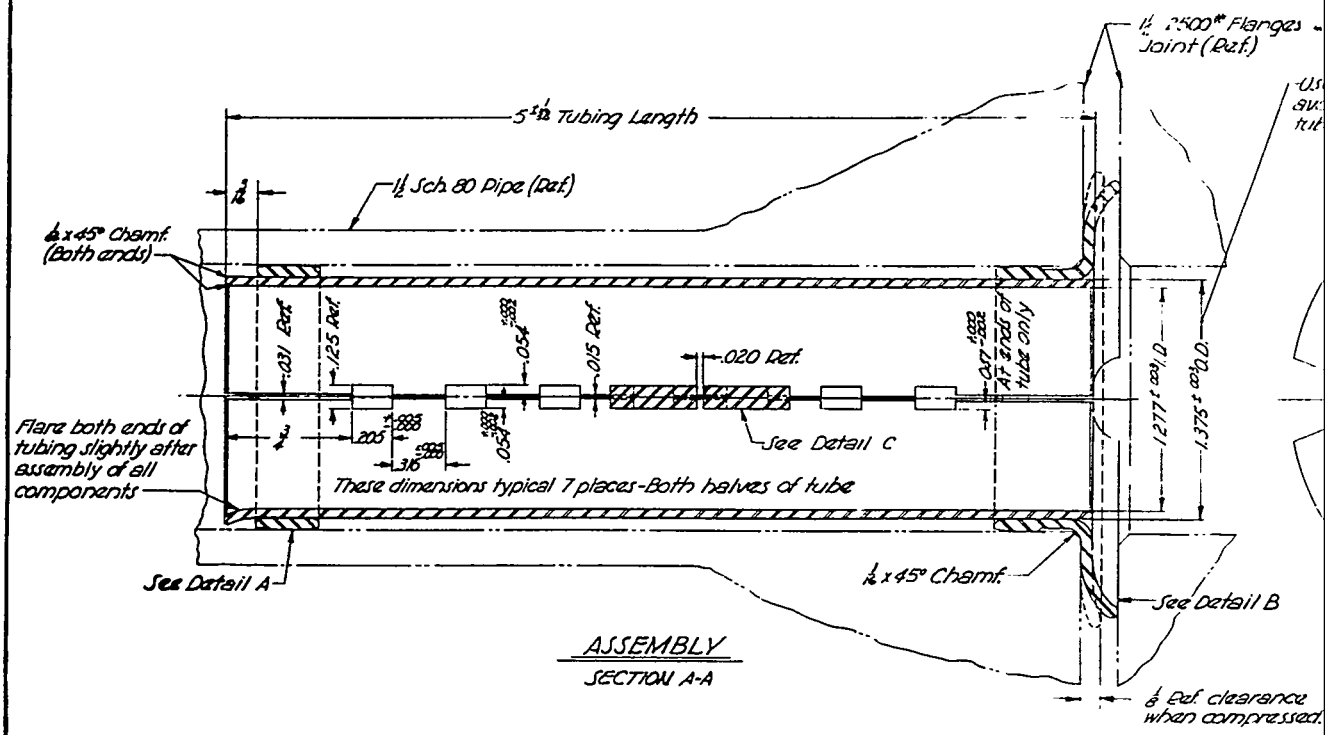

ASSEMBLY

SECTION A-A

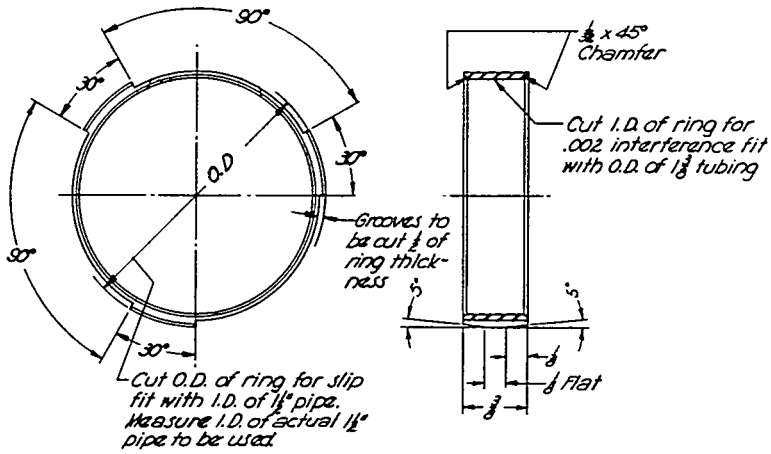

DETAIL A

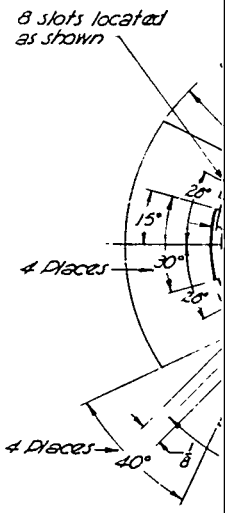

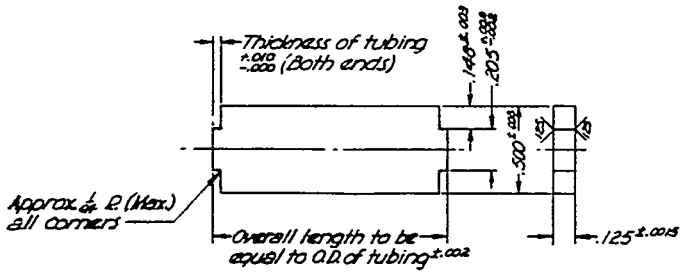

DETAIL C

NO.	REVISIONS	DATE	APPR.	APPR.

DRAWING NO. D-

MATERIALS LIST					
ITEM NO.	DWG. NO.	QTY.	NAME	SIZE	MATERIAL

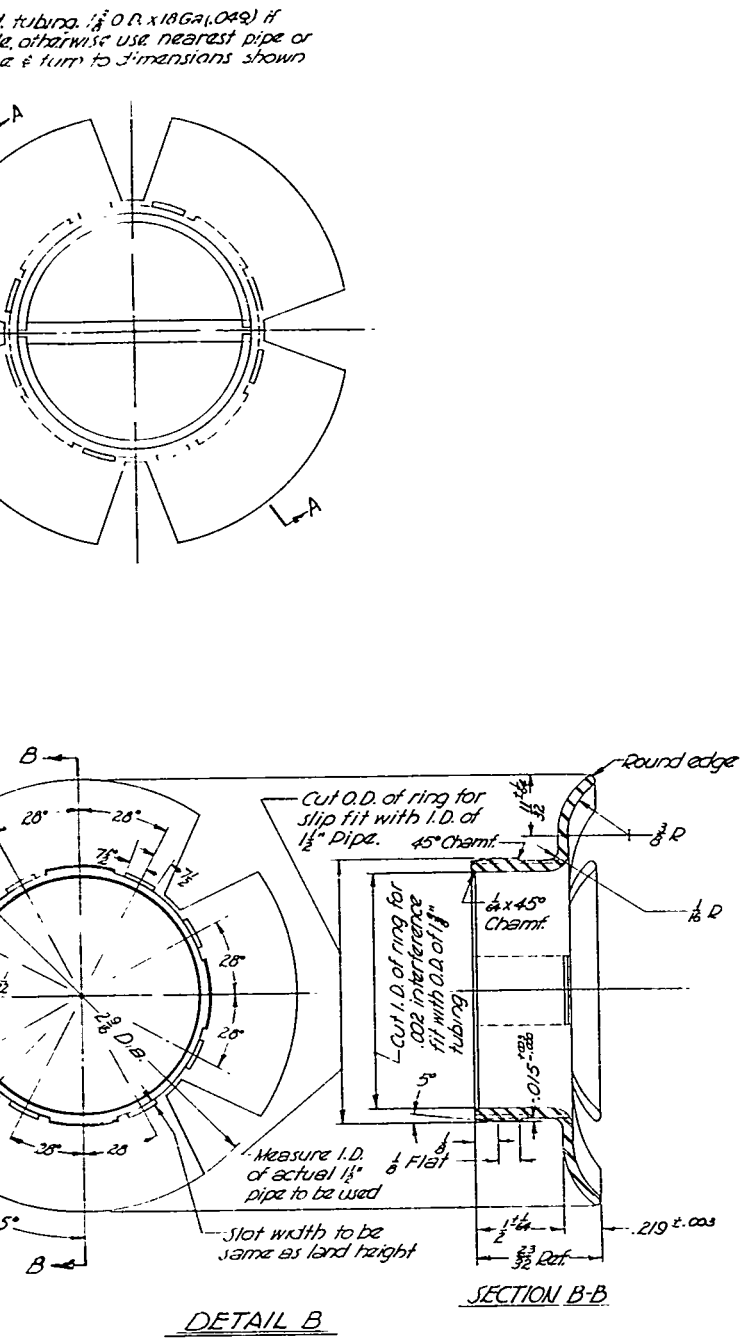

NOTES:

1. Split sleeves & rings to be made of type 347 S. Steel.
2. Material & number of sample pieces (Detail C) will be called out in work order

REFERENCE DRAWINGS	DWG. NO.

MACHINE FINISH SPECIFICATIONS:

1. Finish symbols are in accordance with ASA Standard B46.1 – 1947.
2. Roughness height values are the maximum arithmetical average deviation from the mean surface, expressed in microinches.
3. For surfaces not otherwise indicated, roughness height shall not exceed 60√.

FIG. 6.3A

THIS DRAWING CLASSIFIED

[redacted]

PER J. Sagener

LIMITS ON DIMENSIONS UNLESS OTHERWISE SPECIFIED

FRACTIONS: ± 1/64

DECIMALS: ± As Shown

ANGLES: ± 2°

SCALE: 2" = 1"

HRE EQUIPMENT BLDG. 7500

CORROSION SAMPLE RETAINER

OAK RIDGE NATIONAL LABORATORY
OPERATED BY
CARBIDE AND CARBON CHEMICALS COMPANY
A DIVISION OF UNION CARBIDE AND CARBON CORPORATION
OAK RIDGE, TENNESSEE

SUBMITTED	ACCEPTED	APPROVED

D-10128 REV

is assumed for normal flow, the increased flow rate due to the restriction in the line will be approximately 23.6 ft/sec.

Seven samples are to be inserted in each retainer. Present plans call for two retainers made of type 347 stainless steel, and future plans call for two made of titanium. Samples are to be made of the following materials: types 316, 329, 347, and Carpenter 20 stainless steel, induction melted zirconium, induction melted zirconium plus 5% tin, and titanium.

A special stainless steel flange, which is really a reworking of a standard 1 1/2" 2500 lb. ring joint flange, has been designed and is shown on ORNL Drawing B-10129. The inside diameter of this flange is enlarged to compensate for the drop due to the sample holder and its samples, thereby preventing any increase in the flow velocity. An elbow piece can be fabricated using these flanges, if desired.

CHAPTER 7

SAFETY ASPECTS INHERENT IN DESIGN OF HRE

7.1 General Discussion of Inherent Stability of the HRE

The HRE may be shut down by 1) inserting the safety plates, 2) dumping the reflector, 3) dumping the soup, and 4) cessation of soup circulation. In addition, the reactor has a "built-in" safety system in that its temperature coefficient of reactivity is large - 1/9% k per °C at 250°C. Because of the very large negative temperature coefficient, there is a strong coupling between the temperature and reactivity. In equilibrium the average operating temperature of the soup will be determined by the multiplication constant of the reactor, and the operating temperature is determined by the control plate position or other reactivity control elements.

Again because of the large temperature coefficient of reactivity, the reactor power is determined by the power demand, i.e., by the amount of steam that is drawn off of the heat exchanger (boiler). This means that the turbine governor, which regulates steam flow to the turbine, regulates the power level of the reactor.

7.2 Controls and Interlocks

The controls for the HRE may be divided into three principal groups: 1) Reactor, 2) Process or auxiliary, and 3) Power generation. While these necessarily overlap somewhat because of the coupling between the various functions of the experiment, this classification does designate the primary functions of the controls. Since the project is an experiment designed to furnish data which will aid in designing future large scale homogeneous power producing reactors there are numerous instruments and control features which would ordinarily be omitted.

Five monitrons have been installed in the HRE system to protect equipment and personnel. They are all shown on the General Flowsheet (E-8623), and each is interlocked to perform several functions as indicated in the following table:

	Annunciate	Cut Off Magnet	Dump Soup	Cut Off Stack Fan	Close Valves 316A & B 321, 323, 309, 330 & 317
QRC-25 Soup Oil	X	X	X		
QRC-23 Steam	X	X	X		X
QRC-24 D_2O Off-Gas	X	X	X	X	
QRC-26 Condensate	X	X	X		X
QRC-68 Stack Gas	X	X	X	X	

A complete discussion of the HRE controls and interlocks is given in ORNL Report 1094 entitled "A Manual of HRE Control and Instrumentation."

7.3 Locations, Design Pressures, and Venting of Rupture Discs and Safety Valves in the HRE

Rupture discs are principally used in the HRE because they can be kept leak tight. Since no safety valve is absolutely leak tight, several rupture discs have been installed preceding safety valves in the HRE.

All rupture discs are standard products of Black, Sivalls and Bryson Inc. and are thoroughly described in their Rupture Disc Catalog.

The following tables summarize the pertinent information regarding the rupture discs and safety valves.

HRE RUPTURE DISCS

Service	Line No.	Size	Dwg. Ref.	℄ of Pipe Line	Elevation Above 830'	With Respect to Reactor Centerlines	Barricade Section Ref-D-8439)	Material	Operating Temp. °F	Rupture Pres. Psi	Vent to
Soup Dump	106	1"	D-9051 D-9052	Horiz.	4'-10"	E6'-4"	MK-9	347 SS	250 72	2000 2500	Liquid-G Sep.(Item 91)
D_2O Dump	151	2"	D-8628	Inclined 45°	2"	W-1'-0" N-8'-1"	MK-12	347 SS	250 72	2050 2550	Dump Tank Header(Item 23)
Helium	271	1/2"	D-8628	Horiz.	4'-6"	E-2'-4" N-0'-0"	MK-13	347 SS	250 72	1500 1980	Dump Tank Header(Item 23)
D_2O Off-Gas	274	1/2"	D-8628	Vert.			MK-12	Al.	72	520	D_2O Charcoal Ads. (Item 30)
40 KW Boiler	318	1½"	D-8630 D 8631	Horiz.	5'-6"	W-14'-0" N-0'-6"		347 SS	600 72	999 1460	Steam Condenser (Item 42)
Main Heat Exch.	320	2"	D-8630 D-8631	Vert.	9'-1"	W-5'-9" N-2'-9"	MK-6	347 SS	500 72	760 1095	Steam Condenser (Item 42)
10 KW Boiler	333	1"	D-8628	Vert.	3'-6"	E-3'-0" N-8'-3"	MK-13	347 SS	600 72	2148 3140	Steam Condenser (Item 42)

HRE SAFETY VALVES

Service	Line No.	Relief Pres-psi	Vent To
Helium	271	1500	Dump Tank Header (Item 23)
Main Heat Exchanger	320	750	Condenser (Item 42)
10 KW Boiler	333	1600	Condenser (Item 42)
Steam Condenser	328	Slightly > Atmos.	Atmosphere
Soup-Outer Dump Tanks	147	150	Soup Char. Adsor. (Item 16)
Oil to D_2O Pump	483	300	Blow off in D_2O Cell
Oil to Soup Pump	473	300	Blow off in Soup Cell

Appendix A

HRE Drawing Lists

Three drawing lists have been compiled. Each list has been arranged in a different manner as follows:

1. Numerical Listing 280

2. Item Number Listing 289

3. System Listing 295

1 - Numerical Listing

Drawing Number	Size	Title	Remarks
7491	D	Sampler Assembly	
7492	D	Sampler Assembly	
7493	D	Sampler Assembly	
7551	E	Welded Assembly of Spherical Core Tank	
7552	D	Bearing Revision on Westinghouse H.P. Pump Model 30	
7553	E	Experimental Tank Outlet	
7554	E	Experimental Steam Generator	Void (See D-7559)
7555	E	Welded Assembly of Heat Exchanger Item 20	
7556	D	Welded Assembly of Heat Exchanger Item 12	Void (See D-9062)
7557	B	Stellite Bushing, Westinghouse Pump	
7558	D	Filter Assembly and Details Item 8 and 25	
7559	D	Experimental Steam Generator	Void (See E-9584)
7560	B	Weigh Beam	Void
7561	D	Welded Assembly of Weigh Beam Support	Void
7562	E	Bearing Testing Device HRE Experiment	
7563	D	Bearing Testing Device (Alt.) HRE Experiment	
7564	D	Experimental Steam Generator Detail Sheet #1	Void (See E-9584)
7565	D	Experimental Steam Generator Detail Sheet #2	Void (See E-9584)
7566	D	Soup Cooler Item 7	Void (See D-10107)
7567	D	Core Tank Assembly Item 1	Void (See D-10106)
7568	D	Core Details Sheet #1	Void (See D-10106)
7569	D	Core Details Sheet #2	Void (See D-10106)
7570	C	Modifications to Socket on Ingersoll Rand Wrench	
7571	D	Off-Gas System Flow Diagram	Void (See E-8623)
7572	D	Water Jacket Assembly for Item 22	Void (See D-8633)
7573	D	Water Jacket Assembly for Item 10 and 23	Void (See D-8633)
7574	D	Experimental Pressurizer Item 2	Void (See D-10103)
8301	D	Reactor Tank Assembly	Void (See D-9605)
8302	D	Reflector Comparment Piping	
8303	D	Emergency Cooling System	
8304	E	Reactor Assembly, Vertical Section A-A	
8305	E	The Homogeneous Reactor Experiment (Pictorial)	
8308	D	Reflector Vessel Distribution Liner	
8309	D	40 Kw, 1500 psi Electric Steam Generator Item 62	
8310	D	10 Kw, 1500 psi Electric Steam Generator Item 63	

Drawing Number	Size	Title	Remarks
8311	D	Revised Tube Sheet for Ross Heat Exchanger #803	
8312	E	Instrument Hole Assembly Fission Chamber and Plug	Report Drawing
8313	D	Flow Sheet	Void (See E-8623)
8314	D	Core Tank and Flange Assembly	
8315	D	Reflector Tray and Inlet Detail	
8316	D	Evaporator, Item 9, with added Reinforcement	Void (See D-9593)
8317	E	Instrument Panels	
8318	D	Primary Flame Recombiner Item 13	
8319	D	Flame Recombiner Head Details	
8320	B	Experimental Burner Nozzel and Gasket	
8321	D	Control Valves	Void (See D-8976)
8322	D	Revised Pulsafeeder Head	
8323	D	Heat Exchanger Heads for Items 14 and 15	
8324	C	Detail Drain Line Connection on Control Valve in Line 113	
8325	D	Process Flow Diagram	(See C-9598 Report Figure 1)
8432	D	Location Plan and Arrangement	
8433	D	Barricade Sub-Structure Plan and Details	
8434	D	Barricade Sub-Structure Sections and Details	
8435	D	Barricade Sub-Structure Miscellaneous Details	
8436	D	Control Room Plan and Details	
8437	D	Pipe Trench and Turbine Support	
8438	D	Pre Cast Concrete Floor Slabs Plan and Details	
8439	D	Barricade Structure Plan and Details	
8440	D	Barricade Structure Sections Sheet #1	
8441	D	Barricade Structure Sections Sheet #2	
8442	D	Barricade Structure Sections Sheet #3	
8443	D	Steel Framing for Roof Plan and Details	
8444	D	Roof Plug Details Sheet #1	
8445	D	Roof Plug Details Sheet #2	
8446	D	Roof Plug Details Sheet #3	
8447	D	Steel Supports for Heat Exchanger and Circulating Pumps	
8448	D	Periscope Sleeve Details	
8449	D	Equipment Support Platform	
8450	D	Masonry Column Layout	
8601	D	Safety Plate Assembly and Details	
8602	D	Rod Assembly and Details	

Drawing Number	Size	Title	Remarks
8603	E	Safety Rod Assembly	
8604	E	Regulating Rod Assembly	
8605	D	Magnet and Armature Assembly; Armature Assembly and Details	Void (See D-8644)
8606	D	Guide Assembly and Details	
8607	D	Housing Assembly and Details	
8608	D	Magnet Support Assembly and Details	
8609	D	Hold Down and Drive Assembly	
8610	D	Cable Assembly and Miscellaneous Details	
8611	D	Cable Assembly and Rod Assembly	
8612	D	Plan Views of Control Rod	
8613	D	Instrument Panel Platform	
8614	D	Spiral Inlet Pipe	
8615	E	Instrument Console	
8616	C	Instrument Service Duct	Void
8617	D	Assembly Soup Pump and D_2O Pump Oil Cooling System	
8618	D	Details Soup Pump and D_2O Pump Oil Cooling System	
8619	D	Limit Switch Assembly and Details	
8620	D	Off-Gas Condenser Item 86	
8621	C	Flange Drills for Leak Detector System	
8622	D	Sylphon Valve Actuator Detail Assembly of Prototype (Test Only)	Void (See D-8976)
8623	E	Flowsheet	
8624	C	Steam Drum Item 39	
8625	D	D_2O Evaporator, Item 24	
8626	D	Shielded Area General Layout	
8627	E	Reflector Vessel Flange Piping Plan and Elevation	
8628	D	Reflector Cell Piping Plan and Elevation	
8629	D	Dump Tank Level Indicator Assembly	
8630	D	Heat Exchanger Cell Piping Plan and Section A-A	
8631	D	Heat Exchanger Cell Piping Sections B-B and C-C	
8632	D	Inner Dump Tanks and Emergency Cooling H_2O	Void (See E-9066)
8633	D	Inner Dump Tank Details	
8634	D	Dump Tank Level Indicator Details	
8635	C	Instrument Bridge	
8636	C	Control Instrumentation Tube Installation	
8637	D	Control Instrumentation Duct Installation	
8638	D	Piping and Equipment on Shield face North Elevation	

Drawing Number	Size	Title	Remarks
8639	C	Self Aligning Bearing for 100A Pump, Assembly and Details	
8640	D	Piping Details for Soup and D_2O Pits	Void (See D-9589)
8641	D	Reflector Cell Frame Work Assembly	
8642	C	Orifice Plate Detail for Item F1-53 in Line #446	
8643	D	Experimental Catalytical Recombiner Items 27 and 88	
8644	D	Magnet and Armature Assembly	
8645	D	Piping Details 1 gpm Pulsafeeder Head (Ht. Exch. Cell)	
8646	D	Piping Plan 250 Kw General Set-Up	
8647	D	250 Kw General Set-Up Sections	
8648	D	250 Kw General Set-Up Miscellaneous Piping Details	
8649	E	Experimental Heat Exchanger	
8650	B	Tube Expander for Experimental Heat Exchanger	
8769	D	Roof Framing Shop Details	
8772	D	Plan and Details of Stair, Sheet #1	
8773	D	Plan and Details of Stair, Sheet #2	
8789	D	Charcoal Adsorbers Assembly	Void (See D-9036)
8910	D	Service Piping Plan	
8911	D	Service Piping, Plan and Details	
8912	D	Service Piping, Sections	
8913	D	Outer Dump Tank Valve Pit	
8914	D	Outer Dump Tank Plan and Details	
8915	D	Heat Exchanger for Outer Dump Tanks, Elevation and Details	
8916	D	Outer Dump Tanks and Condenser Assembly Plan and Sections	
8917	D	Exhaust Stack and Stack Guying Plan Section and Details	
8918	D	Exhaust Stack Pad and Stack Grounding Plans Sections and Details	
8919	D	Outside Equipment and Services	
8920	D	Exhaust Stack Underground Piping	
8921	D	Underfloor Conduit Plan	
8922	D	Power Plan	
8923	D	Section and Details	
8924	D	Wiring Diagrams and Equipment Schedule	
8925	D	Equipment Schedule (Electrical)	
8951	D	HN-2, HN-5 and HN-6 Outer Plug Detail	
8952	D	N-S Instrument Holes Liner Detail	
8953	D	E-W Instrument Holes Liner Detail	
8954	D	HN-4 Plug Detail	

Drawing Number	Size	Title	Remarks
8955	D	HN-1 and HN-3 Inner Plug Detail	
8956	D	HN-1 and HN-3 Plug Details	
8957	D	HN-6 Plug Details	
8958	D	HN-2 and HN-5 Plug Details	
8959	D	Instrument Thimble Detail	
8960	D	Instrument Holes Horizontal Section	
8961	D	HN-1, HN-3 and HN-4 General Assembly	
8962	B	Belleville Spring	
8963	C	Control Instrumentation Console Layout	
8964	F	Control Instrumentation Template for Valve Position and Shutdown Alarm Indicator	
8965	D	Control Instrumentation Cell Wall Junction	
8966	D	Control Instrumentation Valve Position and Shutdown Alarm Indicator	
8967	D	HN-2 and HN-5 General Assembly	
8968	D	HN-6 General Assembly	
8969	D	100-A Pump Double Discharge Modification	
8970	D	100-A Pump Bifurcated Discharge Modification	
8971	D	Lifting Yoke and Details for Reflector Vessel Flange	
8972	C	Silica Gel Regenerator Item 32	
8973	C	Special Valve	
8974	A	Assembly Procedure for Dump Tank Jackets	
8975	C	Isometric - Refrigerant Unit	
8976	D	Sylphon Valve Actuator Assembly	
8977	D	Sylphon Valve Actuator Details Sheet #1	
8978	C	Sylphon Valve Actuator Details Sheet #2	
8981	B	Bellows Assembly	
9008	D	Additional Boiler Room Piping	
9036	D	Charcoal Adsorber Assembly	
9051	D	Soup Cell Piping Plan and Horizontal Sections	
9052	D	Soup Cell Piping Sectional Elevations	
9053	D	Soup Cell Equipment Location	
9054	D	Piping and Equipment on Shield Face East Elevation	
9055	D	1/8" Angle Valve Actuator	
9056	D	1/8" Angle Valve Actuator Details	
9057	C	1/8" Angle Valve Actuator Sylphon Assembly	

Drawing Number	Size	Title	Remarks
9058	D	High Pressure Catalytic Recombiner Item 96	
9059	D	Reflector Condenser Item 28	
9060	D	General Piping and Equipment Layout for Building	
9061	D	Cold Traps Item 84 and 89	
9062	D	Heat Exchanger Item 12	
9063	D	Instrument Panel Layout	
9064	C	100-A Pump External Dimensions Item 4	
9065	D	Reactor Tank Assembly	
9066	E	Emergency Cooling System Plan and Elevation	
9067	D	Control Rods Shock Absorber Assembly	
9068	C	Low Pressure Catalytic Recombiner for D_2O Item 27	
9069	E	Instrument Panel for Seal Test Loop	
9070	D	Leak Detector System	
9071	E	Control Room Instrument Tubing Layout	
9072	C	Special Flange Assembly 2" Low Pressure (D_2O) Dump	
9073	D	Condensate Tanks Item 11	
9074	D	Presurizer Insert	
9075	D	Bellows Valve Operator	
9077	D	Boiler Room Piping	
9576	C	Control Circuit for 100-A Pump Seal Test Loop	
9577	D	Instrument Mounting Diagram Seal Test Loop	
9578	D	Report Drawing on Experimental Catalytical Recombiner	
9579	B	Schematic Diagram - Proposed Leak Detection System (Report)	
9580	C	Corrosion Samples Installation and Details	
9581	C	Mercury Seal Pot for Item 17 and 30	
9582	D	Spherical Pressure Vessel Model A (TD-1726)	
9583	D	Top Flange Closure Spherical Vessel (TD-1735)	
9584	E	Steam Generator Item 3 (A.O. Smith MV-7314)	
9585	E	Steam Generator Item 3 Details	
9586	E	Steam Generator Item 3 Details	
9587	D	Cut-Outs for Instruments on R. H. Console Panels	
9588	D	Cut-Outs for Instruments on L. H. Console Panels	
9589	D	Piping Details for Soup and D_2O Pits (Pulsafeeders)	
9590	D	Piping and Equipment Inner Soup Pit (Pulsafeeders)	
9591	D	Miscellaneous Details Inner Soup Pit (Pulsafeeders)	
9592	D	Inner Soup Dump Tanks Item 10A, 10B, 9 and 91	

Drawing Number	Size	Title	Remarks
9593	D	Soup Evaporator Item 9	
9594	C	Leak Detector for Heat Exchanger	
9595	D	Reactor Cell Equipment and Piping	
9596	D	Source Tube	
9597	D	Horizontal Surge Check Valve Assembly and Details	
9598	C	Simplified Flow Diagram	
9599	C	Reducer Welding Fittings	
9600	C	Cold Trap Controls	
9605	D	Reactor Tank Assembly	
10101	C	Special Flange for Pulsafeeder Piping	
10102	D	Female Flange 2000 psi Rupture Disc	
10103	D	Pressurizer Item 2	
10104	D	Pressurizer Details	
10105	D	Steamer Item 93A and 93B	
10106	D	Revised Core Tank Assembly	Void (See D-10113)
10107	D	Soup Cooler Item 7	
10108	D	Low Pressure Catalytic Recombiner for Soup Gas System Item 88	
10109	A	Bill of Material for HRE Steam System	
10110	B	Control Valve List	
10111	B	Insulation Schedule	
10112	D	High Pressure Jet for D_2O Gas Circulation Item 97	
10113	D	Revised Core Tank Assembly	
10114	D	Core Tank Details Sheet #2	
10115	B	Venturi for Recombiner Gas Flow Measurement	
10116	C	Sampler Connections from Item 3	
10117	D	Liquid Level Controller	
10118	F	Template for Valve Position and Shutdown Alarm	
10119	D	Surge Tank for Line 110	
10120	D	Oxygen Metering Station	
10121	D	Accumulator Tank and Details	
10122	B	High Pressure Sampling Valve	Void (See D-10346)
10123	E	Revised Assembly of Regulating Rod	
10124	D	Regulating Rod - Rod and Plate Assembly and Miscellaneous Details	
10125	D	Regulating Rod Guide Tube and Switch Assembly	
10126	D	Regulating Rod Limit Switch Details	

Drawing Number	Size	Title	Remarks
10127	C	Temporary Sampling Device	
10128	D	Corrosion Sample Retainer	
10129	B	Special 1-1/2" 2500# Flange	
10130	D	Alternate Tube Bundle	
10131	D	Tube Sheet Detail Item 9 Sheet #1	
10132	D	Tube Bundle Details Sheet #2	
10133	D	Tube Bundle Details Sheet #3	
10134	C	Alternate Type Sandwich Safety Plate	
10135	D	Revised Flange for A. O. Smith Heat Exchanger Item 3	
10136	C	Alternate Safety Plate - 16 ga. (.065) Tubing as Cast	
10137	C	Soup Sampler Inspection Window	
10138	C	Special Flange and Ring Gasket 1/8 and 1/4 Pipe 2500 psi	
10139	C	Alternate Exp. H. P. Piston Type Feed Pump (Report)	
10140	D	Soup Sampler Schematic Diagrams (Report)	
10141	D	Alterations to Experimental Valve	
10142	D	Experimental Plug Valve	
10143	D	Soup Sampler (Lab.) Assembly	
10144	D	Soup Sampler (Lab.) Manipulator	
10145	D	Soup Sampler (Lab.) Frame and Cover Plate	
10146	D	Soup Sampler (Lab.) Locator and Indexing Table	
10147	D	Soup Sampler (Lab.) Locator and Indexing Table Details	
10148	D	Soup Sampler (Lab.) Locating Shield and Lifting Tool	
10149	D	Soup Sampler (Lab.) Frame Liner	
10150	B	Soup Sampler (Lab.) Manipulator "O" Ring Gland Details	
10326	D	Soup Sampler Equipment Location and Piping Details	
10327	D	Soup Sampler General Assembly	
10328	D	Soup Sampler Housing and Bracket "A"	
10329	C	Soup Sampler Charging Sleeve Plug	
10330	B	Soup Sampler Plug "B"	
10331	D	Soup Sampler Manipulator Assembly "C"	
10332	D	Soup Sampler Manipulator Detail Sheet #1	
10333	D	Soup Sampler Manipulator Detail Sheet #2	
10334	D	Soup Sampler Manipulator Detail Sheet #3	
10335	D	Sample Carrier Assembly and Details "D"	
10336	D	Sample Carrier Shield	
10337	D	Sample Carrier Shield Details	

Drawing Number	Size	Title	Remarks
10338	D	Sampler Locator and Index Table Assembly "F"	
10339	D	Details Sampler Locator and Index Table	
10340	D	Soup Sampler Lifting Tool	
10341	D	Soup Sampler Isolation Chamber Assembly "H"	
10342	D	Soup Sampler Isolation Chamber Details	
10343	D	Soup Sampler Light Assembly and Details "J"	
10344	D	Adjustable Mirror	
10345	C	Window	Void (See C-10137)
10346	D	Soup Sampler Experimental Valve	
10347	D	Soup Sampler Window Shield and 1/8 Hi - Pressure Flanged Union	
10348	C	Soup Sampler Packing Gland for Valve Rods	
10349	C	Soup Sampler Valve Extension Handles Assembly and Details	
10350	D	Soup Sampler Revised Chuck Assembly	
12551	D	Modified Pulsafeeder Discharge Check Valve (D_2O and Soup) Assembly and Details	
12552	D	Modified Pulsafeeder Suction Check Valve Assembly and Details	
12553	D	Pulsafeeder Head Strainer and Pipe Line Strainer Assembly and Details	
12554	D	Adjustable Mirror Details	
12555	D	Liquid Level Controller	

2 - Item Listing*

Item	Item Title	Dwg. No.	Drawing Title	Remarks
1	Core Tank	D-7567	Core Tank Assembly	Void (See D-10106)
		D-7568	Core Tank Details Sheet #1	
		D-7569	Core Tank Details Sheet #2	
		D-8314	Core Tank and Flange Assembly	
		D-10106	Revised Core Tank Assembly	Void (See D-10113)
		D-10113	Revised Core Tank Assembly	
		C-10114	Core Tank Details Sheet #2	
2	Soup Pressurizer	D-7574	Experimental Pressurizer Item 2	Void (See D-10103)
		D-9074	Pressurizer Insert	
		D-10103	Pressurizer - Item 2	
		D-10104	Pressurizer Details	
3	Steam Generator	D-7559	Experimental Steam Generator	Void (See E-9584 E-9585 E-9586
		D-7564	Experimental Steam Generator Details Sheet #1	
		D-7565	Experimental Steam Generator Details Sheet #2	
		E-9584	Steam Generator (A. O. Smith MV-7314)	
		E-9585	Steam Generator (A. O. Smith MV-7314)	
		E-9586	Steam Generator (A. O. Smith MV-7314)	
		D-10130	Alternate Tube Bundle	
		D-10131	Tube Sheet - Sheet #1	
		D-10132	Tube Bundle, Details - Sheet #2	
		D-10133	Tube Bundle, Details - Sheet #3	
4	Soup Circulating Pump		Westinghouse - Dwg. Nos. 32-A-2667 & 32-A-2669 100A Pump	
5 & 21	Soup Pump Oil System	D-8617	Assembly Soup Pump and D_2O Pump	
		D-8618	Details Soup Pump and D_2O Pump	

* Several item numbers are missing. All item numbers were once assigned; however several were deleted as the design progressed.

Item	Item Title	Dwg. No.	Drawing Title	Remarks
6	Soup Feed Pump	D-8322	Revised Pulsafeeder Head	
			Lapp Dwgs. #3719 - Type 5-200 Pulsafeeder Assembly	
			#3829 - Remote Welded Head Assembly	
7	Soup Cooler	D-7566	Soup Cooler	Void (See D-10107)
		D-10107	Soup Cooler	
8 & 25	Soup & D_2O Filters	D-7558	Filter Assembly and Details	
9	Soup Evaporator	D-8316	Evaporator with added Reinforcement	Void (See D-9593)
		D-9593	Soup Evaporator	
		D-9592	Inner Soup Dump Tanks	
10 & 22	Dump Tanks	D-8633	Inner Dump Tank Details	
		D-8634	Dump Tank Level Indicator Details	
		D-9592	Inner Soup Dump Tanks	
		D-8629	Dump Tank Level Indicator Assembly	
11	Condensate Tanks	D-9073	Condensate Tanks	
12	Soup Heat Exchanger	D-9062	Heat Exchanger	
13	Soup Flame Recombiner	D-8318	Primary Flame Recombiner	
		D-8319	Flame Recombiner Head Details	
		B-8320	Experimental Burner Nozzel and Gasket	
14 & 15	Soup Condensers	D-8311	Revised Tube Sheet for Ross Heat Exchanger	
		D-8323	Heat Exchanger Heads	
16	Soup System Charcoal Adsorber	D-9036	Charcoal Adsorber Assembly	
17	Soup System Vacuum Pump		Kinney Pump No. DVD-8810	
18	Reflector Tank	D-8308	Spherical Pressure Vessel	
		D-9065	Top Flange Closure Spherical Vessel	
		D-9582	Reflector Vessel Distribution Liner	
		D-9583	Reactor Tank Assembly	
			Bethlehem Steel Company - Drawing Numbers:	
			180941 - Spherical Pressure Vessel and Details	
			180940 - Spherical Pressure Vessel Assembly	

Item	Item Title	Dwg. No.	Drawing Title	Remarks
19	D_2O Circulating Pump	D-7552	Bearing Revision Westinghouse Pump Model 30 Westinghouse Drawings: 30-A-6475 and 25-A-8283	
20	D_2O Cooler	E-7555	Welded Assembly of Heat Exchanger	
21	See Item 5			
22	See Item 10			
23	D_2O Vapor Header	D-7573 D-8633	Water Jacket Assembly for Item 10 and 23 Dump Tanks - Details	Void (See D-8633)
24	D_2O Evaporator	D-8625	D_2O Evaporator Item 24	
25	See Item 8			
26	D_2O Charging Pump	D-8322	Revised Pulsafeeder Head Lapp Drawings: #5-4357 - Pulsafeeder Model 5-200D. #3829 - Remote Welded Head Assembly	
27	D_2O Catalytic Recombiner	D-8643 C-9068	Experimental Catalytical Recombiner Low Pressure Catalytic Recombiner for D_2O Off Gas.	Void (See C-9068)
28	D_2O Gas Condenser	D-9059	Reflector Condenser	
30	D_2O Charcoal Adsorber	D-9036	Charcoal Adsorber Assembly	
31	Helium Cylinder Station			Built
32	Helium Silica Gel Regenerator	C-8972	Silica Gel Regenerator	
39	Steam Drum	C-8624	Steam Drum	
40	Turbine		See Worthington references in sections 2.5.2 and 2.5.3 of DESIGN MANUAL.	
41	Generator			
42	Steam Condenser			
43	Hot Well Pump			
44	Feed Water Storage Tank		See references in Section 2.5.6 of MANUAL	
45	Feed Water Triplex Pump		Worthington Drawing - DX-102031	
46	Emergency Cooling Water Tank and Finned Tubes	E-9066	Emergency Cooling System Plan and Elevation D-8633 and D-9592 - Tank Cooling Jackets	
47	Control Rod System	D-8601 D-8602 E-8603 E-8604 D-8605 D-8606	Safety Plate Assembly and Details Rod Assembly and Details Safety Rod Assembly Regulating Rod Assembly Magnet and Armature Assembly Guide Assembly and Details	Void (See D-8644)

Item	Item Title	Dwg. No.	Drawing Title	Remarks
		D-8607	Housing Assembly and Details	
		D-8608	Magnet Support Assembly and Details	
		D-8609	Hold Down and Drive Assembly	
		D-8610	Cable Assembly and Miscellaneous Details	
		D-8611	Cable Assembly and Rod Assembly	
		D-8612	Plan Views of Cantrol Rod	
		D-8619	Limit Switch Assembly and Details	
58	Steam Calorimeter		Ellison U-Path Type	
59	Steam Separator		Wright Austin Drawing 5334	
62	40 Kw Boiler	D-8309	40 Kw, 1500 psi Electric Steam Generator	
63	10 Kw Boiler	D-8310	10 Kw, 1500 psi Electric Steam Generator	
64	Outer Dump Tanks	D-8914	Outer Dump Tanks Plan and Details	
		D-8916	Outer Dump Tanks Condenser Assembly	
65	Feed Water Pump		Aurora Turbine Pump Co., Model G5T - Sheet No. 11-PC-2104	
66	Waste Carrier from D_2O Evaporator (Item 24)			
67	Vacuum Pump for Steam Condenser (Item 17)		See Reference of Section 2.5.4 of MANUAL	
68	Condenser for Outer Dump Tank	D-8915	Heat Exchanger	
		D-8916	Condenser Assembly	
69	Remote Operating Wrench	C-7570	Modifications on Ingersol Rand Wrench	
70	Leak Detection System	D-9070	Leak Detector System	
72	Sampling Connections	C-10116	Sampler Connections	
73	Ventilation System	D-8917	Exhaust Stack and Stack Guying Plan	
		D-8918	Exhaust Stack Pad and Grounding Plans	
		D-8920	Exhaust Stack Underground Piping	
75	Shielding Structure	D-8626	Shielded Area General Layout	
		D-8436	Location Plan and Arrangement	
76	Structural Support	D-8447	Steel Supports for Heat Exchanger and Circulating Pumps	
		D-8449	Equipment Support Platform	
		D-8437	Pipe Trench and Turbine Support	

SEC T
SECURITY INFORMATION

Item	Item Title	Dwg. No.	Drawing Title	Remarks
79	Bridge Tubes	D-8951	HN-2, HN-5, HN-6 Outer Plug Detail	
		D-8952	N-S Instrument Holes Liner Detail	
		D-8953	E-W Instrument Holes Liner Detail	
		D-8954	HN-4 Plug Detail	
		D-8955	HN-1 and HN-3 Inner Plug Detail	
		D-8956	HN-1 and HN-3 Plug Details	
		D-8957	HN-6 Plug Detail	
		D-8958	HN-2 and HN-5 Plug Details	
		D-8959	Instrument Thimble Detail	
		D-8960	Instrument Holes Horizontal Section	
		D-8961	HN-1, HN-3 and HN-4 General Assembly	
		D-8967	HN-2 and HN-5 General Assembly	
		D-8968	HN-6 General Assembly	
80	Insulation	B-10111	Insulation Schedule - See Appendix D of MANUAL	
81	Pressurizer Liquid Level Control	D-12555	Liquid Level Controller	
82	Flange Leak Detector	C-8621	Flange Drills for Leak Detector System	
84	Cold Traps D_2O Off Gas	D-9061	Cold Traps Items 84 and 89	
		C-9600	Cold Trap Controls	
85	Refrigerant Compressor for Soup & D_2O Off Gas	C-8975	Refrigerant Unit	
86	D_2O Off Gas Condenser	D-8620	Off Gas Condenser	
88	Soup Catalytic Recombiner	D-10108	Low Pressure Catalytic Recombiner	
89	Cold Traps - Soup Off Gas (See Item 84)			
91	Soup Liquid Gas Separator	D-9592	Inner Soup Dump Tanks	
92	Purge Pump	D-8645	Piping Details 1 gpm Pulsafeeder Head	
93	Steamers (93A and 93B)	D-10105	Steamer	
94	Deuterium Detector (Instrumentation)			
95	Oxygen Accumulator Tank	D-10121	Accumulator Tank and Details	
96	High Pressure Catalytic Recombiner	D-9058	High Pressure Catalytic Recombiner	

Item	Item Title	Dwg. No.	Drawing Title	Remarks
97	High Pressure Jet for D_2O Recombiner Loop	D-10112	High Pressure Jet for D_2O Gas Circulation	
98	Surge Tank	D-10119	Surge Tank for Line 110	
99	Soup Condensate Filter	D-8645	Piping Details - 1 gal/hr Pulsafeeder Pump	

3 - System Listing
Soup System

Item	Drawing Number	Title
8 & 25	D-7558	Filter Assembly and Details Items 8 and 25
7	D-7566	Soup Cooler Item 7 (Void See D-10107)
1	D-7567	Core Tank Assembly Item 1 (Void See D-10106)
	D-7568	Core Details Sheet #1 (Void See D-10106)
	D-7569	Core Details Sheet #2 (Void See D-10106)
2	D-7574	Experimental Presurizer Item 2 (Void See D-10103)
Pictorial	D-8301	Reactor Tank Assembly (Void See D-9605)
Pictorial	D-8303	Emergency Cooling System
63	D-8310	10 Kw, 1500 psi Electric Steam Generator Item 63
	D-8311	Revised Tube Sheet for Ross Heat Exchanger #803
	D-8314	Core Tank and Flange ssembly
13	D-8318	Primary Flame Recombiner Item 13
	D-8319	Flame Recombiner Head Details
	B-8320	Experimental Burner Nozzel and Gasket
	D-8322	Revised Pulsafeeder Head
14 & 15	D-8323	Heat Exchanger Heads for Items 14 and 15
	C-8324	Detail Drain Line Connection on Control Valve in Line #113
	D-8614	Spiral Inlet Pipe
5	D-8617	Assembly Soup Pump and D_2O Pump Oil Cooling System
	D-8618	Details Soup Pump and D_2O Pump Oil Cooling System
	E-8623	Flowsheet
	E-8627	Reflector Vessel Flange Piping Plan and Elevation
	D-8629	Dump Tank Level Indicator Assembly
	D-8632	Inner Dump Tanks and Emergency Cooling H_2O (Void See E-9066)
	D-8633	Inner Dump Tanks Details
	D-8634	Dump Tank Level Indicator Details
	C-8639	Self Aligning Bearing For 100A Pump Assembly and Details
27 & 88	D-8643	Experimental Catalytical Recombiner Items 27 and 88
92	D-8645	Piping Details 16 gpm Pulsafeeder Head (Ht.Exc.Cell)
	E-8649	Experimental Heat Exchanger
	B-8650	Tube Expander For Experimental Heat Exchanger
	D-8913	Outer Dump Tank Valve Pit
64	D-8914	Outer Dump Tank Plan and Details

[redacted]

Item	Drawing Number	Title
	D-8915	Heat Exchanger for Outer Dump Tanks Elevation and Details
64 & 68	D-8916	Outer Dump Tanks and Condenser Assembly Plan and Sections
	D-8969	100A Pump Double Discharge Modification
	D-8970	100A Pump Bifurcated Discharge Modification
	A-8974	Assembly Procedure for Dump Tank Jackets
16	D-9036	Charcoal Adsorber Assembly
	D-9051	Soup Cell Piping Plan and Horizontal Section
	D-9052	Soup Cell Piping Sectional Elevations
	D-9053	Soup Cell Equipment Locations
84 & 89	D-9061	Cold Traps Items 84 and 89
12	D-9062	Heat Exchanger Item 12
4	D-9064	100A Pump External Dimensions
	E-9066	Emergency Cooling System Plan and Elevation
27	C-9068	Low Pressure Catalytic Recombiner for D_2O Item 27
11	D-9073	Condensate Tanks Item 11
	D-9074	Pressurizer Insert
	C-9576	Control Circuit for 100A Pump Seal Test Loop
	C-9580	Corrosion Samples Instillation and Details
	D-9589	Piping Details for Soup and D_2O Pits (Pulsafeeders)
	D-9590	Piping and Equipment Inner Soup Pit (Pulsafeeders)
	D-9591	Miscellaneous Details Inner Soup Pit (Pulsafeeders)
9, 10A, 10B, 91	D-9592	Inner Soup Dump Tanks Items 10A, 10B, 9 and 91
9	D-9593	Soup Evaporator Item 9
	D-9595	Reactor Cell Equipment and Piping
	D-9597	Horizontal Surge Check Valve Assembly and Details
	C-9600	Cold Trap Controls
	D-9605	Reactor Tank Assembly
	C-10101	Special Flange for Pulsafeeder Piping
	D-10102	Female Flange 2000 psi Rupture Disc
2	D-10103	Pressurizer Item 2
	D-10104	Pressurizer Details
93A & 93B	D-10105	Steamer Item 93A and 93B
	D-10106	Revised Core Tank Assembly (Void See D-10113)
7	D-10107	Soup Cooler Item 7
88	D-10108	Low Pressure Catalytic Recombiner for Soup Gas System
	B-10110	Control Valve List
	D-10114	Core Tank Details Sheet #2
	C-10116	Sampler Connections from Item 3

[redacted]

Item	Drawing Number	Title
	D-10117	Liquid Level Controller
98	D-10119	Surge Tank for Line #110
	D-10120	Oxygen Metering Station
95	D-10121	Accumulator Tank and Details
	B-10122	High Pressure Sampling Valve (Void See D-10346)
	C-10127	Temporary Sampling Device
	D-10128	Corrosion Sample Retainer
	B-10129	Special 1-1/2" 2500# Flange
	D-10130	Alternate Tube Bundle
9	D-10131	Tube Sheet Detail Item 9 Sheet #1
	D-10132	Tube Bundle Details Sheet #2
	D-10133	Tube Bundle Details Sheet #3
	C-10137	Soup Sampler Inspection Window
	C-10138	Special Flange and Ring Gasket 1/8" and 1/4" Pipe 2500 psi
	D-10142	Experimental Plug Valve
	D-10143	Soup Sampler (Lab.) Assembly
	D-10144	Soup Sampler (Lab.) Manipulator
	D-10145	Soup Sampler (Lab.) Frame and Cover Plate
	D-10146	Soup Sampler (Lab.) Locator and Indexing Table
	D-10147	Soup Sampler (Lab.) Locator and Indexing Table Details
	D-10148	Soup Sampler (Lab.) Locating Shield and Lifting Tool
	D-10149	Soup Sampler (Lab.) Frame Liner
	B-10150	Soup Sampler (Lab.) Manipulator "O" Ring Gland Details
	D-10326	Soup Sampler Equipment Location and Piping Details
	D-10327	Soup Sampler General Assembly
	D-10328	Soup Sampler Housing and Bracket "A"
	C-10329	Soup Sampler Charging Sleeve Plug
	B-10330	Soup Sampler Plug "B"
	D-10331	Soup Sampler Manipulator Assembly "C"
	D-10332	Soup Sampler Manipulator Detail Sheet #1
	D-10333	Soup Sampler Manipulator Detail Sheet #2
	D-10334	Soup Sampler Manipulator Detail Sheet #3
	D-10335	Sample Carrier Assembly and Details "D"
	D-10336	Sample Carrier Shield
	D-10337	Sample Carrier Shield Details

[redacted]

Item	Drawing Number	Title
	D-10338	Sampler Locator and Index Table Assembly "F"
	D-10339	Details Sampler Locator and Index Table
	D-10340	Soup Sampler Lifting Tool
	D-10341	Soup Sampler Isolation Chamber Assembly "H"
	D-10342	Soup Sampler Isolation Chamber Details
	D-10343	Soup Sampler Light Assembly and Details "J"
	D-10344	Adjustable Mirror
	C-10345	Window (Void See C-10137)
	D-10346	Soup Sampler Experimental Valve
	D-10347	Soup Sampler Window Shield and 1/8 Hi-Pressure Flanged Union
	C-10348	Soup Sampler Packing Gland for Valve Rods
	C-10349	Soup Sampler Valve Extension Handles Assembly and Details
	D-10350	Soup Sampler Revised Chuck Assembly
	D-12551	Modified Pulsafeeder Discharge Check Valve (D_2O and Soup) Assembly & Details
	D-12552	Modified Pulsafeeder Suction Check Valve Assembly and Details
	D-12553	Pulsafeeder Head Strainer and Pipe Line Strainer Assembly and Details
	D-12554	Adjustable Mirror Details
	D-12555	Liquid Level Controller

REFLECTOR SYSTEM

	D-7552	Bearing Revision on Westinghouse H.P. Pump Model 30
20	E-7555	Welded Assembly of Heat Exchanger Item 20
	B-7557	Stellite Bushing Westinghouse Pump
8 & 25	D-7558	Filter Assembly and Details Items 8 and 25
	D-8302	Reflector Compartment Piping
	D-8303	Emergency Cooling System
	D-8308	Reflector Vessel Distribution Liner
	D-8315	Reflector Tray and Inlet Detail
21	D-8617	Assembly Soup Dump and D_2O Pump Oil Cooling System
	D-8618	Details Soup Dump and D_2O Pump Oil Cooling System
86	D-8620	Off-Gas Condenser Item 86
	E-8623	Flowsheet
24	D-8625	D_2O Evaporator Item 24
	E-8627	Reflector Vessel Flange Piping Plan and Elevation
	D-8628	Reflector Cell Piping Plan and Elevation

SECURITY INFORMATION

Item	Drawing Number	Title
	D-8629	Dump Tank Level Indicator Assembly
	D-8632	Inner Dump Tanks and Emergency Cooling H_2O (Void See E-9066)
	D-8633	Inner Dump Tanks Details
	D-8634	Dump Tank Level Indicator Details
	D-8641	Reflector Cell Frame Work Assembly
27 & 88	D-8643	Experimental Catalytical Recombiner Items 27 and 88
	D-8971	Lifting Yoke and Details for Reflector Vessel Flange
	D-9036	Charcoal Absorber Assembly
96	D-9058	High Pressure Catalytic Recombiner
28	D-9059	Reflector Condenser Item 28
84 & 89	D-9061	Cold Traps Item 84 and 89
	D-9065	Reactor Tank Assembly
	E-9066	Emergency Cooling System Plan and Piping
27	C-9068	Low Pressure Catalytic Recombiner for D_2O Item 27
	C-9072	Special Flange Assembly 2" Low Pressure (D_2O) Dump
	C-9580	Corrosion Samples Installation and Details
	D-9582	Spherical Pressure Vessel Model A (TD-1726)
	D-9583	Top Flange Closure Spherical Vessel (TD-1735)
	D-9589	Piping Details for Soup and D_2O Pits (Pulsafeeders)
	D-9590	Piping and Equipment Inner Soup Pit (Pulsafeeders)
10A, 10B, 9 & 91	D-9592	Inner Soup Dump Tanks Items 10A, 10B, 9 and 91
	D-9595	Reactor Cell Equipment and Piping
	C-9600	Cold Trap Controls
	C-10101	Special Flange for Pulsafeeder Piping
97	D-10112	High Pressure Jet for D_2O Gas Circulation Item 97
	D-12551	Modified Pulsafeeder Discharge Check Valve (D_2O and Soup) Assembly & Details
	D-12552	Modified Pulsafeeder Suction Check Valve Assembly and Details
	D-12553	Pulsafeeder Head Strainer and Pipeline Strainer Assembly and Details

POWER SYSTEM

62	D-8309	40 Kw, 1500 psi Electric Steam Generator Item 62
	D-8437	Pipe Trench and Turbine Support
	D-8447	Steel Supports for Heat Exchanger and Circulating Pumps
39	C-8624	Steam Drum Item 39
	D-8630	Heat Exchanger Cell Piping Plan and Section A-A
	D-8631	Heat Exchanger Cell Piping Sections B-B and C-C
	D-8646	Piping Plan 250 Kw Generator Set-Up

Item	Drawing Number	Title
	D-8647	250 Kw Generator Set-Up Sections
	D-8648	250 Kw Generator Set-Up Miscellaneous Piping Details
3	E-9584	Steam Generator Item 3 (A. O. Smith, MV-7314)
	E-9585	Steam Generator Item 3 Details
	E-9586	Steam Generator Item 3 Details
	C-9599	Reducer Welding Fittings
	A-10109	Bill of Material for HRE Steam System
3	D-10135	Revised Flange for A. O. Smith Heat Exchanger Item 3
		SHIELDING OR BARRICADE AREA
	D-8432	Location Plan and Arrangement
	D-8433	Barricade Sub-Structure Plan and Details
	D-8434	Barricade Sub-Structure Sections and Details
	D-8435	Barricade Sub-Structure Miscellaneous Details
	D-8436	Control Room Plan and Details
	D-8437	Pipe Trench and Turbine Support
	D-8438	Pre Cast Concrete Floor Slabs Plan and Details
73	D-8439	Barricade Structure Plan and Details
	D-8440	Barricade Structure Sections Sheet #1
	D-8441	Barricade Structure Sections Sheet #2
	D-8442	Barricade Structure Sections Sheet #3
	D-8443	Steel Framing for Roof Plan and Details
	D-8444	Roof Plug Details Sheet #1
	D-8445	Roof Plug Details Sheet #2
	D-8446	Roof Plug Details Sheet #3
	D-8447	Steel Supports for Heat Exchanger and Circulating Pumps
	D-8448	Periscope Sleeve Details
	D-8449	Equipment Support Platform
	D-8450	Masonry Column Layout
	D-8626	Shielded Area General Layout
	D-9060	General Piping and Equipment Layout for Building
		INSTRUMENTATION
	E-8317	Instrument Panels
	D-8613	Instrument Panel Platform
	E-8615	Instrument Console

~~SECRET~~
SECURITY INFORMATION

Item	Drawing Number	Title
	C-8635	Instrument Bridge
	C-8636	Control Instrumentation Tube Instillation
	D-8637	Control Instrumentation Duct Instillation
79	D-8951	HN-2, HN-5 and HN-6 Outer Plug Detail
	D-8952	N-S Instrument Holes Liner Detail
	D-8953	E-W Instrument Holes Liner Detail
	D-8954	HN-4 Plug Detail
	D-8955	HN-1 and HN-3 Plug Details
	D-8956	HN-1 and HN-3 Plug Details
	D-8957	HN-6 Plug Details
	D-8958	HN-2 and HN-5 Plug Details
	D-8959	Instrument Thimble Detail
	D-8960	Instrument Holes Horizontal Section
	D-8961	HN-1, HN-3 and HN-4 General Assembly
	C-8963	Control Instrumentation Console Layout
	F-8964	Control Instrumentation Template for Valve Position
	D-8965	Control Instrumentation Cell Wall Junction
	D-8966	Control Instrumentation Valve Position and Shutdown Alarm Indicator
	D-8967	HN-2 and HN-5 General Assembly
	D-8968	HN-6 General Assembly
	D-9063	Instrument Panel Layout
	E-9069	Instrument Panel for Seal Test Loop
	E-9071	Control Room Instrument Tubing Layout
	D-9577	Instrument Mounting Diagram
	D-9587	Cut-Outs for Instruments on R. H. Console Panels
	D-9588	Cut-Outs for Instruments on L. H. Console Panels
	B-10115	Venturi for Recombiner Gas Flow Measurement
	F-10118	Template for Valve Position and Shutdown Alarm

CONTROL SYSTEM

	D-8601	Safety Plate Assembly and Details
	D-8602	Rod Assembly and Details
	E-8603	Safety Rod Assembly
	E-8604	Regulating Rod Assembly
	D-8605	Magnet and Armature Assembly (Void See D-8644)
	D-8606	Guide Assembly and Details
	D-8607	Housing Assembly and Details

Item	Drawing Number	Title
	D-8608	Magnet Support Assembly and Details
	D-8609	Hold Down and Drive Assembly
	D-8610	Cable Assembly and Miscellaneous Details
	D-8611	Cable Assembly and Rod Assembly
	D-8612	Plan Views of Control Rod
	D-8619	Limit Switch Assembly and Details
	D-8644	Magnet and Armature Assembly
	D-9055	1/8" Angle Valve Actuator
	D-9056	1/8" Angle Valve Actuator Details
	D-9057	1/8" Angle Valve Actuator Sylphon Assembly
	E-9066	Emergency Cooling System Plan and Elevation
	D-9067	Control Rods Shock Absorber Assembly
	E-10123	Revised Assembly of Regulating Rod
	D-10124	Regulating Rod - Rod and Plate Assembly and Miscellaneous Details
	D-10125	Regulating Rod Guide Tube and Switch Assembly
	D-10126	Regulating Rod Limit Switch Details
	C-10134	Alternate Type Sandwich Safety Plate
	C-10136	Alternate Safety Plate - 16 ga. (.065) Tubing as Cast
		ELECTRICAL
	D-8921	Under Floor Conduit Plan
	D-8922	Power Plan
	D-8923	Section and Details
	D-8924	Wiring Diagrams and Equipment Schedule
	D-8925	Equipment Schedule (Electrical)
		GENERAL PIPING
	D-8626	Shielded Area General Layout
	E-8627	Reflector Vessel Flange Piping
	D-8628	Reflector Cell Piping Plan and Elevation
	D-8630	Heat Exchanger Cell Piping Plan and Section A-A
	D-8631	Heat Exchanger Cell Piping Sections B-B and C-C
	D-8638	Piping and Equipment on Shield Face North Elevation
	D-8646	Piping Plan 250 Kw Generator Set-Up
	D-8647	250 Kw Generator Set-Up Sections
	D-8648	250 Kw Generator Set-Up Miscellaneous Piping Details

Item	Drawing Number	Title
	D-8910	Service Piping Plan
	D-8911	Service Piping Plan and Details
	D-8912	Service Piping Sections
	D-9051	Soup Cell Piping Plan and Horizontal Sections
	D-9052	Soup Cell Piping Sectional Elevations
	D-9054	Piping and Equipment on Shield Face East Elevation
	D-9060	General Piping and Equipment Layout for Building
	D-9077	Boiler Room Piping
	B-10111	Insulation Schedule
		BUILDING (Civil)
	D-7019	Plot Plan
	C-7020	Building 7501 Plan, Sections and Details
	D-7021	Potable and Process Water Lines
	D-7711	Outside Underground Services
	D-7779	Experimental Building Locality Map
		(Electrical)
	D-7025	Plan and Profile - South Section 13.2 KV Transmission Line
	D-7026	Pole Line Structure Details Sheet #1
	D-7027	Pole Line Structure Details Sheet #2
	D-7028	Transformer Step-Down Station Elevations and Sections
	D-7527	Plan for North Section 13.2 KV Transmission Line
	D-7528	154/13.2 KV Substation Steel Structure Plan and Details
	D-7529	154/13.2 KV Substation Steel Structure Details Sheet #1
	D-7536	154/13.2 KV Substation Steel Structure Details Sheet #2
	D-7698	Lighting Plan
	D-7699	Lighting Details
	D-7700	Power Plan
	D-7701	Power Details and Elevations
		(Mechanical)
	D-7004	Plumbing System Sanitary Process and Hot Drains
	D-7011	Plumbing System H and C.W. Lines

Item	Drawing Number	Title
	D-7012	Service Piping
	D-7763	AIC Control Room Plan and Details
	D-7761	Service Piping Details
	D-7538	Heating Plan
	D-7579	Evaporator Piping Plan
	D-7580	Evaporator Piping Details
	D-7581	Roof Drain Piping
	D-7582	Evaporator Sampler Details Sheet #3
	D-7583	Evaporator Condenser
	D-7585	Evaporator Plan Section and Details
	D-7586	Evaporator Steam Coil
	D-7587	Evaporator Feed Tank Sheet #1
	D-7588	Evaporator Feed Tank Sheet #2
	D-7589	Instrument Board
	D-7590	Sampler Assembly
	D-7591	Sampler Details Sheet #1
	D-7592	Sampler Details Sheet #2
	D-7687	Ventilation Hot Lab Ductwork
	D-7688	Steam Piping Details
	D-7697	Fuel Oil Storage Tank and Dike
	D-7712	Void
	D-7715	Boiler Room Piping Plan and Sections
	CL-706D-159	CL #5 Jet (1/2" IPS S.S)
	D-7722	Demineralized Water Storage Tank
	D-7723	Hood Exhaust Plan and Elevations
	D-7041	Water Line Details Sheet #1
	D-7042	Water Line Details Sheet #2
	D-7043	Water Line Details Sheet #3
	D-7526	Water Line Details Sheet #4
	D-7558	HRE Equipment Filter Assembly and Details
	D-8404	Service Piping to Evaporator
	D-8919	Outside Equipment and Services
	D-8920	Exhaust Stack Underground Piping

Item	Drawing Number	Title
		(Structural)
	D-7238	Concrete Foundation Plan
	D-7239	Foundation Sections and Details
	D-7240	Ground Floor Plan
	D-7241	Section 1-1 and Miscellaneous Details
	D-7242	Elevations and Details Sheet #1
	D-7243	Elevations and Details Sheet #2
	D-7244	Roof Plan and Details
	D-7245	Roof Framing Plan
	D-7246	Crane Runway Framing and Ladder Details
	D-7247	Steel Framing Elevations Sheet #1
	D-7248	Steel Framing Elevations Sheet #2
	D-7249	Typical Wall Sections
	D-7277	Roof Truss Details
	D-7278	Laboratory Equipment Elevations
	D-7279	Hood Base Details
	D-7280	Hood Base Grating and Skin Plates
	D-7250	Building Electrical Service Rack and Miscellaneous Details
	D-7584	Evaporator Shielding Plan and Details
	D-7276	Miscellaneous Details
	D-8769	Roof Framing Shop Details
	D-8772	Plan and Details of Stair Sheet #1
	D-8773	Plan and Details of Stair Sheet #2
	D-8917	Exhaust Stack and Stack Guying Plan Section and Details
	D-8918	Exhaust Stack Pad and Stack Grounding Plans Sections and Details
		MISCELLANEOUS
	B-7557	Stellite Bushing Westinghouse Pump
	E-7562	Bearing Testing Device HRE Experiment
	D-7563	Bearing Testing Device (Alt.) HRE Experiment
	C-7570	Modifications to Socket on Ingersol Rand Wrench
	E-8304	Reactor Assembly Vertical Section A-A
	E-8305	The Homogeneous Reactor Experiment (Pictorial)
	E-8312	Instrument Hole Assembly Fission Chamber and Plus (Report)

Item	Drawing Number	Title
	C-8324	Detail Drain Line Connection on Control Valve in Line #113
	C-8621	Flange Drills for Leak Detector System
	C-8642	Orifice Plate Detail for Item F1-53 in Line #446
	B-8962	Belleville Spring
32	C-8972	Silica Gel Regnerator Item 32
	C-8973	Special Valve
	C-8975	Isometric Refrigerant Unit
	D-8976	Sylphon Valve Actuator Assembly
	D-8977	Sylphon Valve Actuator Detail Sheet #1
	D-8978	Sylphon Valve Actuator Detail Sheet #2
	B-8981	Bellows Assembly
	D-9055	1/8" Angle Valve Actuator
	D-9056	1/8" Angle Valve Actuator Details
	C-9057	1/8" Angle Valve Actuator Sylphon Assembly
	D-9070	Leak Detector System
	D-9075	Bellows Valve Operator
	D-9578	Report Drawing on Experimental Catalytical Recombiner
	B-9579	Schematic Diagram Proposed Leak Detector System
	C-9581	Mercury Seal Pot for Items 17 and 30
	C-9594	Leak Detector for Heat Exchanger
	C-9598	Simplified Flow Diagram
	C-10139	Alt. Exp. H. P. Piston Type Feed Pump (Report)
	D-10140	Soup Sampler Schematic Diagrams (Report)
	D-10141	Alterations to Experimental Valve

APPENDIX B

HRE

FLOWSHEET LINE SCHEDULE

(Ref. Dwg. E-8623)

[redacted]

FLOWSHEET LINE SCHEDULE

The Line Schedule is divided into 5 sections as follows:

(1) PROCESS PIPING.

(a) Soup System - Lines 101 - 149 incl, and 210 - 249 incl. Includes all lines normally carrying soup solutions, overflow lines, vapor and condensate lines and vacuum transfer lines.

(b) D_2O System - Lines 150 - 209 incl. Includes all lines normally carrying D_2O, overflow lines, vapor and condensate lines and vacuum transfer lines.

(c) Pressurizing System - (Helium) - Lines 259 - 299 incl. Pressure and Helium relief.

(2) POWER PIPING SYSTEM. Lines 300 - 399 incl.. Includes all lines carrying steam or condensate and boiler feedwater system.

(3) SERVICE PIPING. Lines 400 - 699 incl.. (Excluding power system) Includes all steam, water, and vacuum service lines, vent lines, sampler lines and electric service lines, emergency cooling water, helium purge lines for silica gel absorbers, oil cooling lines for soup and D_2O, and refrigerant.

(4) INSTRUMENT PIPING. Lines 700 - 950 incl. Includes all air instrument and electrical instrument lines.

(5) LEAK DETECTION SYSTEM. Lines 950.

For details of instrument installation see ORNL-1094.

(Several line numbers have been omitted in the following schedule. Originally all the numbers were used, however many were deleted as the design progressed.)

S[redacted]

Line No.	N.P.S.	PIPE Matl.	PIPE Sch.	SERVICE	FROM Item	FROM Eqpt.#	TO Item	TO Eqpt.#	REMARKS
101	1 1/2"	SS	80	Soup	Pressurizer	2	Heat Exch.	3	3 Sets 1 1/2"-2500# Flanges Connect Lines-714,716, & 851
102	1 1/2"	SS	80	Soup	Soup Cir.Pump	4	Core Tank	1	2 Sets 1 1/2"-2500# Flanges Connect Lines-713 and 919
103	1 1/2"	SS	80	Soup	Heat Exch.	3	Soup Cir.Pump	4	1 Set 1 1/2"-2500# Flanges Connect Line 717
104	1/8"	SS	80	Soup & Gas	Core Tank	1	Heat Exch.	12	1 Set 1/2"-2500# Flanges Connect Line 765
105	1/2"	SS	80	"	Heat Exch.	12	Soup Liquid-Gas Separator	91	1 Pair, 150# 1/2" Flanges to mate with eq.12. 1 Set 1/2" 2500# Flanges, Control valve in line. Connect Line 106 & 766.
106	1/4" 1/2"	SS SS	80 80	Soup Dump	Core Tank	1	Line 105		1 Set 1/2"-2500# Flanges-Control Valve in line, special 2000 psi rupture disc. 1/2" from reducer to line 105. Connect Line 880.
107	1/2"	SS	80	Discharge Soup Rupture	Rupture Disc.		Line 106		
108	3/4"	SS	80	Soup Feed	Soup Cooler	7	Filter	8	2-45° ells-3/4" x 1 reducer 1 Set 2500# Flanges. Connect Line 914.
109	3/4"	SS	80	Soup Feed	Filter	8	Pulsafeeder	6	Connect Line 114. 1" x 3/4" reducer.

Line No.	N.P.S.	PIPE Matl.	Sch.	SERVICE	FROM Item	Eqpt.#	TO Item	Eqpt.#	REMARKS
110	1/4"	SS	80	Soup Feed	Pulsafeeder	6	Surge Tank	98	Check Valve. 1 Set 1/2"-2500# Flanges (drill for 1/4" N.P.S.) Fabricate 1-3/4" x 1" reducer.
111	1/4"	SS	80	Soup Feed	Heat Exch.	12	Pressurizer	2	1 Set 1/2"-2500# Flanges (drill for 1/4" N.P.S.). Connect Line767.
112	1"	SS	80	Soup Circ.	Soup Tank	10a	Evaporator	9	Connect Lines 113,748, and 899.
113	1/2"	SS	40	Soup Dump to outer Dump Tanks	Line 112		Line 117		2 Control Valves in line. Connect Line 118 & 120. 2-1/2 x 1/2 x 1/2 Tees.
114	1/2"	SS	40	Soup Condensate	Condensate Tanks	11	Line 109		1 Set 1/2"-150# Flanges. Control valve in line (dilution). Connect Lines 130 & 211 & 916, 131, 226. 1 90° L, 3-1/2 x 1/2 x 1/2 Tees.
115	2"	SS	40	Soup Gas & Vapor	Soup Liquid Gas Separator	91	Soup Gas Cond.	14	Connect Line 125 & 225.
116	1"	SS	40	Soup Gas	Line 210		Soup Gas Flame Recombiner	13	Orifice in Line. Connect Lines 728, 861, 864 and 918.
117	1/2"	SS	40	Outer Dump Tank Liquid Header	Outer Dump Tank	64a	Outer Dump Tank	64b	Connect Line 113
118	1/2"	SS	40	Outer Dump Tank Condenser Drain	Condenser	68	Line 113		
119	1"	SS	40	Outer Dump Tank Vapor Header	Dump Tank	64	Dump Tank	64	Connect Line 132. 1" x 1" x 1" Tee.

Line No.	PIPE N.P.S.	PIPE Matl.	PIPE Sch.	SERVICE	FROM Item	FROM Eqpt.#	TO Item	TO Eqpt.#	REMARKS
120	1/4" 1/2"	SS SS	40 40	Dump Tank Decontamination & Waste Drain	Valve in Line 113		Line 322	33	2 Control Valves in line 1/4" from Red. to Line 113. 1" x 1" x 1/2" Tee, 1/2" x 1/2" x 1/2" Tee
121	1/2" 1/4"	SS SS	80 80	Vent on 1 GPH purge pump	Pulsafeeder	92	Liq. Gas Separator	91	Control Valve in line. 1/4" from pump to valve
122	1/4" 1/2"	SS SS	40 40	Soup Cond. feed	Soup Gas Cond.	14	Pulsafeeder	92	Soup Cond. filter (item 99) in line 1 Set 150# Van Stone Flanges 1/4" from flange to pump head.
123	1/4" 3/8"	SS SS	80 80	" "	Pulsafeeder	92	Soup Pump	4	2 Sets 1/2"-2500# Flanges 3/8" from 100-A pump to 1st flange 1/4" from flange to Pulsafeeder valve.
125	1/4" 1/2"	SS SS	80 80	Soup Gas & Vapor	Pressurizer	2	Line 115		1/2" x 1/4" reducer. 1 Set 1/2"-2500# Flanges. Control valve in line 1/2" from Red. to line 115 Connect Line 701, 700
126	1/2"	SS	40	Soup Condensate	Line 130		Soup Liquid-gas separator	91	Control Valve in Line. Connect Line 139. Liquid trap in line 1/2" x 1/2" x 1/4" Tee.
128	1/2"	SS	40	Soup Condensate	Soup Gas Flame Recomb.	13	Line 129		Connect Line 890, 221 & 228 1" x 1" reducer-1/2" x 1" x 1" Tee.
129	1/2"	SS	40	Soup off-gas Cond.	Off-gas Condenser	15	Liquid gas Separator	91	Check Valve in Line. Connect Line 128 (at low point in cell) Liquid Trap in line - 1" x 1/2" reducer.
130	1/2"	SS	40	Soup Cond. to weigh tank	Soup gas cond.	14	Line 114		Connect Line 126, 874, 217. 1" x 1/2" reducer. 2-1/2 x 1/2 x 1/2 Tees.

Line No.	PIPE N.P.S.	Matl.	Sch.	SERVICE	FROM Item	Eqpt.#	TO Item	Eqpt.#	REMARKS
131	1/2"	SS	40	Decontamination & fill(soup)	Outside Shield		Line 114	14	Control Valve in Line Hand valve outside shield.
132	1" 1/2"	SS SS	40 40	Outer dump tank soup gas & vapor	Outer dump tank Line 119	64	Line 148		Control Valve in line. Connect Condenser (68) in Line 1" from 119 to Cond. 1/2" from Cond. to 148. Connect Line 147 2-1" x 1" x 1/2" Tees.
136	1/2"	SS	40	Soup Dry off-gas	Cold Trap	89a	Line 137		Control Valve in Line. Connect Line 903 2-1/2" x 1/2 x 1/2" Tees.
137	1/2"	SS	40	" " "	"	89b	Charcoal Absorber	16a	Control Valve in Line,& Ext. Handle Valve in Line outside shield. Connect Lines 136, 147, 516, 216, 1/2 x 1/2 x 1/2" Tee.
138	1/2"	W.I.	40	" " "	Charcoal Absorber	16a	Soup off-gas vac. pump	17	Needle Valve in Line. Connect Lines 215 and 846.
140	1/2"	W.I.	40	" " "	Vac.Pump	17	Shield Exhaust duct		Ext. Handle sample valve off line Connect Lines 846 and 519.
142	1"	SS	40	Soup off-gas	Flame Recomb.	13	Catalytical Recombiner	88	Connect Line 719 & 222 1" x 1/2" reducer, 1" x 1" x 1/2" tee.
143	1"	SS	40	Soup off-gas	Cat. Recomb.	88	Soup off-gas cond.	15	Connect Lines 725 & 868 1" x 1 1/2" reducer, 1" x 1" x 1/2" tee.
144	1/2"	SS	40	Soup off-gas	Soup off-gas cond.	15	Line 145		Connect Line 869 2 1/2 x 1/2 x 1/2" Tees.
145	1/2"	SS	40	Soup off-gas	Cold Trap	89a	Cold Trap	89b	Connect Line 144

Line No.	N.P.S.	PIPE Matl.	PIPE Sch.	SERVICE	FROM Item	FROM Eqpt.#	TO Item	TO Eqpt.#	REMARKS
147	1/2"	SS	40	Outer dump tank safety	Line 132		Line 137		Safety valve set at 150 psi in line outside shield.
148	1"	SS	40	Inner dump tanks	Item 10		Item 10		Connect Lines 132, 212, & 747 1" x 1" x 1/2" Tee
149	3/4"	SS	80	" "	Item 10		Item 7		Connect Line 898 3/4" x 3/4" x 1/2" Tee.
150	2" 4"	SS SS	80 40	D_2O Dump	Reflector Vessel	18	Dump Tank Header Item 23		Control Valve in Line. 1 weld neck flange 1500#-3" A-106 bored for slip fit with 2" pipe (from vessel to valve sch. 80) Sch. 40 (4") from valve to dump tank. Connect line 737 and 270.
151	2"	SS	40	Emergency by-pass	Line 150		Line 150		2" (Assem.#6) Rupture disc 2000 psi and flanges 2" R.F.-300# SS flanges Flexitallic Gasket.
152	1"	SS	80	D_2O Circ. for Reflector	Line 150		D_2O Pump	19	1 Set 1" 2500# W.N. Flanges SS
153	1"	SS	80	" "	D_2O pump	19	D_2O Cooler	20	1 Set 1" 2500# W.N. Flanges SS Connect Line 164.
154	1"	SS	80	" "	D_2O Cooler	20	Ref. Vessel	18	1 Set 1" 2500# W.N. Flanges SS Connect Line 768 and 146.
155	1/2"	SS	40	D_2O Level Control for Reflector	Line 152		Line 181		D_2O Dump Valve in Line.
156	3/4"	SS	40	D_2O Supply	Line 181		Filter(D_2O)	25	1 Set 2500# 3/4" Flanges-Red. Coupling 1" x 3/4".

Line No.	PIPE N.P.S.	Matl.	Sch.	SERVICE	FROM Item	Eqpt.#	TO Item	Eqpt.#	REMARKS
157	3/4"	SS	40	D_2O Supply	Filter	25	Pulsafeeder	26c	Reducing coupling 1" x 3/4" Connect Lines 176 and 177.
158	1/2"	SS	80	" "	Pulsafeeder	26a	Line 152		Connect Line 179 1-set flanges 3/4" - 2500# 1" x 1" x 1/2" tee.
159	1/2"	SS	40	D_2O Evaporator	Line 181		Evaporator	24	Control Valve & Check Valve in line.
160	2"	SS	40	D_2O Evaporator vapor line	Evaporator	24	Line 161		Connect Line 186
161	2"	SS	40	D_2O vapor	D_2O Gas Header	23	Condenser	28	Connect Line 160
162	1/2"	SS	40	D_2O Cond.	Condenser Header	28	D_2O Liquid Header (Line 181)		Connect Line 173 below D_2O dump tanks. Check Valve in line. Connect 186 and 161.
163	1/2"	SS	40	D_2O Fill	Line 165		Atmos.		Near top of cell. 2 globe valves & pressure gage in line.
164	1/2" 3/4"	SS SS	40 40	By-pass around D_2O cooler	Line 153		Line 154		Jet (Item 97) in line-connect line 166. 1/2" line jacketed with 1 1/2" sch. 80 A-106 pipe for 20 ft.(for cooling) 3/4" between jet and ref. vessel.
165	1/2"	SS	40	D_2O Gas non-Condensible	Condenser	28	Catalytic Recomb.	27	Connect line 808 and 163.
166	1/8"	SS	40	High pres. D_2O Cat. Recomb.	Cat Recomb.	96	Jet	97	Control valve in line
167	1/2"	B.I.	40	D_2O dry gas Header	Cold Trap	84b	Line 168		1 control valve in line. Orifice in line.

[redacted] [redacted]

Line No.	N.P.S.	PIPE Matl.	Sch.	SERVICE	FROM Item	Eqpt.#	TO Item	Eqpt.#	REMARKS
168	1/2"	B.I.	40	D_2O Dry gas Exhaust	Cold Trap	84a	Charcoal Absorber	30	QRC/24 (Item 94) in parallel, 1 control valve in line. Orifice in line. Connect 812, 274 & 471. Two pair 150# flanges. (94) in line (DRA-27) Hg Seal pot in line.
169	1/2"	W.I.	40	D_2O Dry Gas	Charcoal Absorber	30	Shield Exhaust duct		Connect lines 266, & 472
171	1/2"	SS	40	D_2O off-gas cond.	D_2O off-gas Condenser	86	Line 173		Connect line 857
172	1/8"	SS	40	High pres. D_2O Cat. Recomb.	Line 270		Cat. Recomb.	96	
173	1/2"	SS	40	D_2O Cond. Gas(2 systems)	Cold Trap	84 a & b	Line 162		Connect Line 171
176	3/4"	SS	40	D_2O Supply	Line 157		Pulsafeeder	26a	
177	3/4"	SS	40	D_2O Supply	Line 157		Pulsafeeder	26b	
178	1/2"	SS	80	D_2O Supply	Pulsafeeder	26b	Line 179		
179	1/2"	SS	80	D_2O Supply	Pulsafeeder	26c	Line 158		Connect line 178
181	3"	SS	40	D_2O Liquid Header	Line 162		Line 159		Connect lines 155, 156, 159, 752, 875 and 876.
184	1"	SS	40	D_2O Evaporator		24	Waste Carrier	66	Waste Carrier Extension Valve & Funnel.
185	1/2"	SS	40	D_2O Gas & Cond.	Cat. Comb.	27	D_2O off-gas Cond.	86	Connect 785 in line.
186	1/2"	SS	40	D_2O Drain	Line 160		Line 162		

-315-

[redacted]

Line No.	PIPE N.P.S.	Matl.	Sch.	SERVICE	FROM Item	Eqpt.#	TO Item	Eqpt.#	REMARKS
210	1/2"	SS	40	Vent for cond. tanks	Line 116		Condensate tanks	11 a&b	Connect line 218 1 x 1/2" reducer, 1/2 x 1/2 x 1/2 "
211	1/2"	SS	40	Between condensate tanks		11a		11 b	Connect Line 763 1/2" x 1/2" x 1/2" Tee
212	1/2"	SS	40	Soup gas bleed	Line 109		Line 148		1-set low pres. Van Stone flanges.
214	1/4"	SS	40	Steamer overflow	Steamer	93a	Line 126		
215	1/2"	W.I.	40	Soup dry Off-gas	Charcoal Abs.	16b	Line 138		
216	1/2"	SS	40	" "	Line 137		Charcoal abs.	16b	Extension valve in line.
217	1/2"	SS	40	Soup off-gas steamer	Line 130		Steamer	93a	
218	1/2"	SS	40	" "	Steamer	93a	Line 210		
221	1/2"	SS	40	Soup off-gas Steamer	Line 128		Steamer	93b	
222	1/2"	SS	40	" "	Steamer	93b	Line 142		
225	1/4"	SS	40	Soup system vent line	Line 115		Atmos. vent		Valve in line. Located at high point in cell
226	1/2"	SS	40	Drain for soup cond.	Line 114		Inside soup pulsafeeder pit		Bellow seal & Needle valve. 2 Extension handle valves in line.
227	1/4"	SS	80	Soup surge tank	Surge tank	98	Heat Exch.	12	Connect Line 878
228	1/4"	SS	40	Steamer overflow	Steamer	93b	Line 128		

Line No.	N.P.S.	PIPE Matl.	Sch.	TUBE O.D.xthk.Mtl.	SERVICE	FROM Item	FROM Eqpt.#	TO Item	TO Eqpt.#	REMARKS
259				1/4" .049 Cu	Helium to Absorber	Line 262		Silica gel Absorber	32a	1 Valve in line.
260	1/8"	SS	40	1/4" .049 Cu	" "	He Sta.#1	31	Line 262		Instr. Pc/28 in line. Connect bleed line. Hand valve in line.
262	1/8"	SS	40	1/4" .049 Cu	He Header to Silica gel abs.	Line 260		Silica Gel Absorber	32b	1 valve. Connect lines #260, 264, 263, and 259.
263	1/8"	SS	40	1/4" .049 Cu	He to Reactor	He Sta.#2	31	Line 262		Instr. Pc/28 in line. Connect bleed line. Hand valve in line.
264	1/8"	SS	40	1/4" .049 Cu	He to Reactor	He Sta.#3	31	Line 262		Instr. Pc/28 in line. Connect bleed line. Hand valve in line.
265	1/8"	347	40	1/4" .049 Cu	He to Reactor	Silica Gel Abs.	32a	Line 267		Connect line #272. 1 manual valve. Instr. Pa/47 & Pa/76 in line.
266				1/4" .049 Cu	He vacuum Break	Line 267		Line 168		Relief Vacuum Break. Valve in line.
267	1/8"	347	40	1/4" .049 Cu	He header to control rod system	Silica Gel Abs.	32b	Control Rod Drive system	47	Copper outside shield, SS pipe inside shield. 2-air operated valves, 1 manual valve, Connect lines 265, 273, 266, 882, 268 & 269-Surge check.
268	1/8"	347	40		He to Control Drive	Line 267		Control Rod Drive	47	
269	1/8"	347	40		" "	Line 267		" "	47	

-317-

Line No.	PIPE N.P.S.	PIPE Matl.	PIPE Sch.	SERVICE	FROM Item	FROM Eqpt.#	TO Item	TO Eqpt.#	REMARKS
270	1/8" 1/8"B 1/2 " 1/2 "	347 Steel " 347	40 40 80 40	He, Reflector Exhaust	Reflector	18	Line 150		1/8" BS from item 18 to Reducer 1/2" BS from Reducer to valve 1/2" SS from valve to reducer 1/8" SS from reducer to line 150 two-1/2-1/8 Red. coupling soc. weld, 1/2 control valve.
271	1/2"B 1/2" "	Steel "	80 40	He.Exhaust by-pass	Line 270		Line 270		1/2" BS from 270 to Relief valve 1 set 1/2" flanges, 1/2"-1500 psi Relief valve, & 1/2"-1500 psi Rupture disc. 1/2" SS from Relief valve to 270.
272	1/8"	347	40	Silica Gel He.bleed	Line 265		Atmos.		Valve in line.
273	1/8"	347	40	" "	Line 267		Atmos.		" " "
274	1/2" 1/2"	347 B.I.	40 40	Safety Relief	Line 185		Line 168		(500 psi) Rupture disk in line SS from 185 to disc.
300	1/2" 1 1/2"	B.I.	40	Boiler Feed Make up water	From Bldg. D.M. water	42	Line 301		Strainer & valve in line.
301	2"	B.I.	40	" "	Condenser	42	Hotwell pump suction	43	
302	1"	B.I.	40	Hot well make up water	Hot well pump	43	Line 307		Connect LC/7 in line. Check valve in line.
303	1 1/2"	B.I.	40	Hot water tank to pumps	Feedwater storage tank	44	Lines 304, 343		Strainer & 2-valves in line.
304	1 1/2"	B.I.	40	" "	Line 303		Feed pump	45	Valve in line
305	1 1/2"	B.I.	40	Boiler feed water	Line 302		LC/7		

Line No.	N.P.S.	PIPE Matl.	Sch.	SERVICE	FROM Item	Eqpt.#	TO Item	Eqpt.#	REMARKS
306	3/4"	B.I.	40	Bldg. Cond. Return	Line 307		Line 347		Valve & Check Valve in line.
307	1"	B.I.	40	Feed Pump Safety Header	Feedwater pumps		Feedwater Storage	44	Connect Lines 344, 346, 302, and 315.
308	1"	A-106	80	Boiler feed-water header	" "	65	Line 309		Connect Lines 310, 344, & 849. Check & Hand Valve in line.
309	1"	A-106	80	Boiler feed-water Line	" "	45	Heat Exch.	3	Check & Control valve in line. 3 hand valves in line. Connect Lines 346, 310, 769, 852
310	1"	A-106	80	" "	Line 308		Line 309		Check valve & control valve in line. Connect Lines 311, 312, & 313.
311	1"	A-106	80	Boiler (preheat)	Line 308		D_2O Cooler	20	
312	1"	A-106	80	Boiler feed from D_2O Cooler	D_2O Cooler	20	Line 310		
313	1"	A-106	80	Boiler feedwater	Line 310		Condenser	42	1 control valve (too hot valve) in line.
314	1/4"	A-106	80	10 kw Boiler feed	Line 309		Line 427		1 valve (Extension Handle) in line.
315	3/4"	B.I.	40	Hot well Drain	Line 307		C.W.D.		Valve in line.
316	4"	A-106	80	HRE Steam to Turbine	Steam drum	39	Turbine	40	2 control valves, separator, gate valve, calorimeter & orifice in line. Connect 324, 325, 323, 330, 345, 331, 841 and 839.

-319-

Line No.	N.P.S.	PIPE Matl.	Sch.	SERVICE	FROM Item	Eqpt.#	TO Item	Eqpt.#	REMARKS
317	1 1/2"	A-106	80	40 kw Steam to Steam Drum	40 kw Boiler	62	Steam Drum	39	Hand valve in line. Connect Line 318. 900# flange in line (318)
318	1 1/2" 1 1/2"	A-106 A-106	40 80	40 kw Steam Rupture	Line 317		Line 320		Rupture disc 1000# 1 set flanges Reducing coupling 2" x 1" Sch. 80 to Rupture Disc.
319	20"	on condenser		Turbine Ex.	Turbine	40	Condenser	42	Pl-39 in line.
320	2" 2"	B.I. A-106	40 80	Boiler Heat Ex. safety valve	Boiler heat Exch. (Safety)	3	Condenser	42	Rupture disc 750#, Safety valve & Check valve in line. Sch. 80 to Safety. Connect Line 333, 345, 330, 323, & 318.
321	1/2" 1"	A-106 A-106	80 80	Boiler Heat Ex. Drain	Line 322		Hotwell		Control valve & 3 hand valves in line. Connect 327, & 332. 1" from 322 to 332; 1/2" from 332 to hot well
322	1 1/2" 1"	A-106 SS	80 40	Boiler heat exch. Blow down to hot waste	Heat Exch.	3	Waste feed tank	33	1 Extension valve in line (Blow down) A-106 to valve from heat exch SS from valve to feed tank. Connect 321, & 335. Ion Chamber on line.
323	2"	A-106	80	HRE Steam dump	Line 316		Line 320		1-dump valve
324	1 1/2" 2 1/2"	A-106 A-106	80 80	Bldg. Steam to heat up	Bldg. steam		Line 316		1 control valve, check valve, & strainer in line - connect 325, & 331.
325	1 1/2"	A-106	80	Bldg. Steam to steam drum	Line 324		Line 316		1 Manual valve
326	3/8"	A-106	40	Steam tracer on line 320	100 psi steam source		Cond. drain		2 valves, strainer and trap in line

-320-

[redacted]

Line No.	N.P.S.	PIPE Matl.	Sch.	SERVICE	FROM Item	Eqpt.#	TO Item	Eqpt.#	REMARKS
327	1/2"	A-106	80	Bldg. steam cond. from HRE	Line 321		Bldg. cond. return		1 valve & 1 steam trap Sch. 40 beyond trap Sch. 80 to trap
328	6"	B.I.	40	Turbine cond. safety	Condenser	42	Atmos.		1 safety valve.
329	4"	A-106	40	Steam by-pass to condenser	Line 316		Condenser	42	1 gate valve in line.
330	1"	A-106	80	HRE steam dump throttle valve	Line 320		Line 316		1 dump control valve in line
331	1/2"	A-106	80	Turbine warm up	Line 324		Line 316		1 valve in line
332	1/2"	A-106	80	40 kw cond. return	Line 321		40 kw Boiler	62	Reducing coupling 3/4" x 1/2"
333	1" 1" 1 1/2"	A-106 A-106 A-106	80 40 40	10 kw boiler safety system	10 kw Boiler	63	Line 320		Farris Safety Valve 1600 psi-inlet 1"-1500# ring joint-outlet 1 1/2" 150# R.F. Reducer 1 1/2 x 1"-Sch. 40 to safety valve-1" Sch. 40 from red. Rupture Disc set 2200 psi inlet-1"-150# ring joint-outlet 1"-1500# weld neck.
334	4"	A-106	80	HRE Steam Supply	Heat Exch	3	Steam Drum	39	QRC/23 Control in line. (Ion Chamber)
335	1/2"	A-106	80	Steam cond. Return	Steam drum	39	Line 322		
344	1/2"	A-106	80	Feed pump Safety	Line 308	65	Header Line 307		Safety Valve in line set at 300 psi.

-321-

Line No.	N.P.S.	PIPE Matl.	Sch.	SERVICE	FROM Item	Eqpt.#	TO Item	Eqpt.#	REMARKS
345	1/2"	A-106	80	Safety on Steam Lines	Line 320		Line 316		Relief valve in line set at 400 psi.
346	1/2"	A-106	80	Safety on feed pump	Line 309		Line 307		Safety valve in line set at 500 psi.
347	3/4"	B.I.	40	Bldg. Cond. Return	Line 302		Bldg. cond. tank		Control valve in line.
400	1/2"	G.I.	40	Emergency Cooling Supply	Process Water Supply	46	Level Control #5		Valve & Strainer in line.
401	1 1/4" 1 1/2"	G.I. G.I.	40 40	Emergency Cooling Check & drain line	Line 466		Atmos & Drain		2 safety, & 1 vacuum relief valves. 1 1/2" drain after checks & vent line.
402	1/4"	B.I.	40	Cooling water from coil	Line 484		Coil line 416		
403	1/4"	B.I.	40	Cooling water to coil	Line 416		Line 485		
406	2"	G.I.	40	Emergency cooling to dump	Line 407		Line 405		1 valve, hand (by-pass)
407	2" 1 1/2"	G.I. G.I.	40 40	" "	Line 504		Soup Dump Tanks	10a	Screwed Fittings-Scram 1 motor control valve outside shield. Connect by-pass line 406. Reducer 1 1/2" from tanks to 407
411	1/2"	B.I.	40	Stem to steamer	Steam supply		Steamer	93b	
412	1/2"	B.I.	40	Cond. return	Steamer	93b	C.D.		Trap, strainer & check valve outside shield.

Line Nos. 345 - 412

[redacted]

Line No.	N.P.S.	PIPE Matl.	Sch.	TUBE O.D.xthk.Matl.	SERVICE	FROM Item	FROM Eqpt.#	TO Item	TO Eqpt.#	REMARKS
413	1/2"	B.I.	40		Steam to Steamer	Steam Supply		Steamer	93a	
414	1/2"	B.I.	40		Cond. Return	Steamer	93a	C.D.		Trap, strainer & check valve outside shield.
415	2"	G.I.	40		Emergency cooling from dumps	Soup dump tanks	Item 10	Line 423		
416				5/16" .049 Cu	Cooling coil on by-pass at pressurizer	Line 402		Line 403		
419	2"	G.I.	40		Emergency main header cooling from dump	Soup dump tanks	Item 23	Line 423		Connect line 790
420	1 1/2"	G.I.	40		Emergency cooling header to soup dump	Line 407		Soup dump tanks	10b	
422	2"	G.I.	40		Emergency cooling main to dump tanks	Cooling tank	46	Soup Cond. (bot.)	68	Screwed fittings from welding fin-tube header. Connect 506, 504, 423, & 811.
423	2"	G.I. B.I.	40		" "	Soup Cond. (top)	68	Finned Tubes	46	Screwed fittings gal. above ground, B.I. below ground. Connect 415, 419 and 761.
424	1/2"	G.I.	40		D_2O gas cooling water supply	Process water supply		D_2O Condenser	28	1 control valve (outside shield)

-323-

Line No.	N.P.S.	PIPE Matl.	Sch.	SERVICE	FROM Item	Eqpt.#	TO Item	Eqpt.#	REMARKS
425	1"	G.I.	40	D_2O gas cooling water drain	D_2O Condenser	28	Cooling water drain at North face		To funnel outside shield TC in line outside shield FI/82 in line.
426	1"	Grade B A-106	80	Steam to Pressurizer	10 kw boiler	63	Pressurizer	2	Flange - Connect line 887.
427	3/4"	Grade B A-106	80	Cond. from Pressurizer	Pressurizer	2	10 kw boiler	63	Flange - Connect line 314, & 505.
428	1"	G.I.	40	Cooling water to D_2O oil system	Process Water		D_2O Oil Heat Exch.	21	Hand valve outside cell Connect line 821.
429	1"	G.I.	40	Cooling water drain D_2O oil system	D_2O oil heat Exch.	21	Cooling water Drain		Drain to funnel outside shield.
430	3/4"	B.I.	40	D_2O Evap. System	100# Steam Supply		D_2O Evaporator	24	Valve & Gage outside shield.
431	3/4"	B.I.	40	D_2O Evap. Cond. Drain	D_2O Evap.	24	Steam Cond. Drain		Trap, Strainer & Check Valve Outside shield.
432	1/2"	G.I.	40	C.W. to D_2O off-gas	Process Water		D_2O off-gas Cond.	86	Valve outside shield.
433	1/2"	G.I.	40	C.W. Drain to D_2O off-gas	D_2O off-gas Condenser	86	C.W. Drain		C.W. drain outside shield Connect 877, & FI/74 in line.
434	1/2"	B.I.	40	Steam to D_2O Cat. Recomb.	D_2O steam Supply		D_2O Cat. Recomb.	27	Valve outside shield.

Line No.	N.P.S.	PIPE Matl.	Sch.	SERVICE	FROM Item	Eqpt.#	TO Item	Eqpt.#	REMARKS
435	1/2"	B.I.	40	Steam Cond. Drain	D_2O Cat. Recomb.	27	Bldg. Cond. Drain		Trap & Strainer outside shield. Screwed fittings.
436	3/4"	B.I.	40	Steam to soup Evap.	Bldg. Steam Supply		Evaporator	9	Valve outside shield. Connect Line 834.
437	1/2"	B.I.	40	Cond. from soup Evap.	Evaporator	9	Steam Cond. Drain		Trap, Strainer & Check Valve outside shield.
438	1"	G.I.	40	Cooling water to flame Recomb.	Process Water		Flame Recomb.	13	Hand valve & control valve outside shield. Connect line 895.
439	1"	G.I.	40	Cooling water from flame Recombiner	Flame Recomb.	13	Cooling water Drain		Drain to funnel outside shield. Connect Line 866. FI/84 in line.
440	1"	G.I.	40	C.W. to soup gas cond.	Process Water		Soup gas Cond.	14	Hand valve & control valve outside shield.
441	1"	G.I.	40	C.W. from soup gas cond.	Soup gas Cond.	14	Cooling water drain	5	Drain to funnel outside shield. Connect Line 873 inside shield Flow meter FI/83 in line-outside shield.
442	1/2"	B.I.	40	Steam to Cat. Recomb.	House Steam Supply		Cat. Recomb.	96	
443	1/2"	B.I.	40	Steam cond. line.	Cat. Recomb.	96	Jet	97	Trap, strainer & check valve outside shield.
444	3/4"	B.I.	40	Steam to Kinney Vac. Pump	Bldg. Steam		Vac. pump	67	Future line 1 valve in line-screwed fittings.

Line No.	N.P.S.	PIPE Matl.	Sch.	SERVICE	FROM Item	FROM Eqpt.#	TO Item	TO Eqpt.#	REMARKS
445	3/4"	B.I.	40	C.D. from Kinney vac. pump	Vac. pump	67	Drain		Future line-screwed fittings.
446	4"	B.I.	40	C.W. to Turbine Cond.	Process Water		Condenser	42	1-valve Instr. F1/53 & TW/55 in line.
447	6"	B.I.	40	C.W. from Turbine Condenser	Condenser	42	C.W. Drain		Instr. TW/57 in line
448	1/2"	B.I.	40	Steam for soup gas cat. recomb.	Bldg. steam Supply		Soup cat. Recomb.	88	Valve outside shield.
449	1/2"	B.I.	40	Cond. from soup gas cat. recomb.	Soup Cat. Recomb.	88	Cond. Drain		Trap, strainer & check valve outside shield.
450	2"	B.I.	40	Cond. vac. System	Condenser	42	Vacuum pump	67	
451	1 1/2"	B.I.	40	" "	Vac. pump	67	Stack fan Suction		Screwed fittings.
452	1"	A-106	40	Cooling oil to D_2O Pump	Oil system	21	D_2O pump	19	Screwed fittings (oil-out) Valve-Connect lines 819 & 820.
453	1"	A-106	40	Cooling oil from D_2O pump	D_2O Pump	19	Oil System	21	Screwed fittings (air-in) Valve.
454	1"	A-106	40	Cooling oil to soup pump	Oil system	5	Soup pump	4	Connect lines 770, 891 Screwed fittings.

Line No.	N.P.S.	PIPE Matl.	Sch.	TUBE O.D.xthk.Mtl.	SERVICE	FROM Item	FROM Eqpt.#	TO Item	TO Eqpt.#	REMARKS
455	1"	A-106	40		Cooling oil from soup pump	Soup pump	4	Oil System	5	Screwed fittings.
456				5/8" .040 Cu	Refrigerant Header Liq.	Refrigerant Compressor	85	Lines 458, 460, 462		Sweat fittings-Type L hard drawn.
457				1 3/8" .055 Cu	Refrigerant Header gas	" "	85			Connect 459, 461 and 463.
458				5/8" Type L Cu	Refrigerant to soup cold trap	Line 456		Cold Trap	89b	Solenoid & float valves in line.
459				1 1/8" .050 Cu 7/8" Type L Al	Refrigerant gas from soup cold trap	Cold trap	89b	Line 457		Connect bulb from expansion valve in line 458. Al outside shield.
460				5/8" Type L Cu	Refrigerant to soup cold trap	Line 456		Cold Trap	89a	Solenoid valve and expansion valves in line.
461				1 1/8" .050 Cu 7/8" Type L Al	Refrigerant gas from soup cold trap	Cold trap	89a	Line 457		Connect bulb from expansion valve in line 460. Al outside shield.
462				5/8" & 3/8" Type L Cu	Refrigerant to D_2O cold trap	Line 456		Cold trap	84a	Solenoid & expansion valves in line 5/8" inside shield.
463				7/8" Type L Cu	Refrigerant gas from D_2O cold trap	Cold trap	84b	Line 457		Connect bulb from expansion valve in line 464. Connect line 465.

-327-

[redacted]

Line No.	N.P.S.	PIPE Matl.	Sch.	TUBE O.D.	Wthk.	Mtl.	SERVICE	FROM Item	FROM Eqpt.#	TO Item	TO Eqpt.#	REMARKS
464				5/8" & 3/8"	Type L	Cu	Refrigerant to D_2O cold trap	Line 462		Cold trap	84b	Solenoid & Expansion valves in line 5/8" inside shield.
465				7/8"	Type L	Cu	Refrigerant gas from D_2O cold trap	Cold trap	84a	Line 463		Connect bulb from expansion valve in line 462.
466	1/2"	G.I.	40				Emergency Cooling water supply	Liquid Controller No. 5		Line 401		Screwed fittings.
468	1/2"	G.I.	40				" "	Level Controller LC-5		Cooling Water Tank	46	Valve in line-screwed fittings.
469	1/2"	A-106	40				Cooling water to jacket around line 164	Line 311		Cooling Jacket		
470	1/2"	A-106	40				Cooling water from jacket around line 164	Cooling Jacket		Line 470		
471	1/2"	B.I.	40				Sample line	Line 168		Atmos.		Valve in line.
472	1/2"	B.I.	40				" "	Line 170		Atmos.		Valve in line.
473	1"	B.I.	40				Relief for oil reservoir (soup pump cooling)	Oil Reservoir	5	Blow off in cell		Relief valve in line set at 300 psi. Screwed fittings. Connect line 474.

Line No.	PIPE N.P.S.	PIPE Matl.	PIPE Sch.	TUBE O.D.xthk.Matl.	SERVICE	FROM Item	FROM Eqpt.#	TO Item	TO Eqpt.#	REMARKS
474				1/4" .032 Steel	Vent for oil Reservoir (soup pump cooling)	Oil Reservoir	5	Line 473		Extension handle-valve in line
475	1"	G.I.	40		Oil Cooling Water (soup pump)	C.W. Supply		Heat Exch.	5	Screwed fittings-valve outside shield. Connect line 802.
476	1"	G.I.	40		" "	Heat Exch.	5	C.W. Drain Outside Shield		Screwed fittings.
477	1"	B.I.	40		Steam to outer dump tanks	Steam Supply		Line 478		Valve in line-screwed fittings. Connect line 805.
478	1"	B.I.	40		Steam to outer dump tanks (Header)	Outer dump tank jacket (top)	64	Outer dump tank jacket (top)	64	Connect line 477 Screwed fittings.
479	1/2"	B.I.	40		Steam cond. from dump tank (Header)	Outer dump tank jacket (bot)	64	Outer dump tank jacket (bot.)	64	Connect line 480 Screwed fittings.
480	1/2"	W.I.	40		Steam cond. from dump tank	Line 479		Steam cond. Drain		Screwed fittings. Trap, Strainer & check valve in line.
481	1/8"	S.S.	80		Soup Sampling	Line 101		Sampler		2 Extension valves in line. 1/2 - 2500# Flanges in line.
482	1/8"	S.S.	80		" "	Sampler		Line 103		" " " "
483	1"	B.I.	40		Relief for oil reservoir (D_2O pump cooling)	Oil Reservoir	21	Inside Shield		300 psi Relief valve in line. Blow off inside shield.

Line No.	N.P.S.	PIPE Matl.	Sch.	SERVICE	FROM Item	Eqpt.#	TO Item	Eqpt.#	REMARKS
484	1/2"	G.I. B.I.	40	Cooling water in control rods	Cold Water Supply, header		Control Rod Lines		G.I. & Screwed fittings. B.I. at Reactor Connection (welded fittings) Valve outside cell (Flange in line) Connect 486, 487, & 488.
485	1/2"	G.I. B.I.	40	Cooling Water out Control Rods	Control rod Lines		Cold Water Drain		G.I. & Screwed fittings. B.I. at Reactor connection (welded fittings) Valve outside cell (Flange in line) Connect 489, 490, & 491.
486	1/4"	G.I. B.I.	40	Cooling water in Control Rods	Line 484		Control rod Jacket	47	G.I. outside of Reactor Cell.
487	1/4"	B.I. G.I.	40	Cooling water in Control Rods	Line 484		Control rod Jacket	47	G. I. outside of Reactor Cell.
488	1/4"	B.I. G.I.	40	" "	Line 484		" "	47	G.I. outside of Reactor Cell.
489	1/4"	B.I. G.I.	40	Cooling water out of control rod	Control Rod Jacket	47	Line 485		G.I. outside of Reactor Cell.
490	1/4"	G.I. B.I.	40	" "	" "	47	" "		G.I. outside of Reactor Cell.
491	1/4"	G.I. B.I.	40	" "	" "	47	" "		G.I. outside of Reactor Cell.
492	3/8"	G.I.	40	Oil Reservoir	Item	5	Oil Fill & Drain		Extension handle valve in line. Just inside south face of Reactor.

Line No.	N.P.S.	PIPE Matl.	Sch.	SERVICE	FROM Item	Eqpt.#	TO Item	Eqpt.#	REMARKS
493	3/8"	G.I.	40	Liquid Level Indicator	Oil Reservoir	5	LI-73		South face of Reactor. Extension handle valve in line. Connect line 833.
494	3/8"	G.I.	40	" "	LI-73	5	Oil Reservoir		Extension handle valve in line.
495	3/8"	G.I.	40	Oil Reservoir	Item	21	Oil Fill & Drain		East face of Reactor-Hand valves in line (3).
496	3/8"	G.I.	40	Liquid Level Indicator	Oil Reservoir		Oil Reservoir		LI-70 - two hand valves in line.
497	1/4"	G.I.	40	Purge Pump	Item 92		Water head		Soup pulsafeeder Item 92
498	1/4"	G.I.	40	" "	Water Head Item 92		Soup head		" " " " "
499	3/4" 1"	B.I. "	80 80	Pulsafeeder	Item 6		Water head		" " " " "
500	3/4" 1"	B.I. "	80 80	" "	Water head Item 6		Soup head		" " " " "
501	3/4" 1"	B.I. "	80 80	Pulsafeeder	Item 26a		D_2O Head		D_2O Pulsafeeder- 3/4" connection near head.
502	1" 3/4"	B.I. "	80 80	" "	Item 26b		" "		" " " "
503	1" 3/4"	B.I. "	80 80	" "	Item 26c		" "		" " " "
504	2"	G.I.	40	Emergency Cooling	Item 16		Line 422		Connect 406 and 407.
505	1/8"	B.I.	40	Bleed on 10 kw Boiler	Line 427		Inside Shield		Barstock valve and cap in line.

[redacted]

Line No.	N.P.S.	PIPE Matl.	Sch.	SERVICE	FROM Item	FROM Eqpt.#	TO Item	TO Eqpt.#	REMARKS
506	2"	G.I.	40	Emergency Cooling	Line 422		Dump Tanks	22	4 line header
507	1"	G.I.	40	C.W. inlet	C.W. Supply		Soup off-gas Cond.	15	Control valve in line.
508	1/2"	G.I.	40	Steam Cond.	Item 9		Condensate Drain		From inner steam jacket Trap, strainer & check valve in line.
509	1/2"	G.I.	40	Water for soup cooler	C.W. Supply		Soup cooler	7	Valve in line. Connect line 913 Connect FI/75 in line outside shield.
510	1/2"	G.I.	40	" " "	Soup cooler	7	C.W.D.		Valve in line. Connect line 912.
511	1"	G.I.	40	Cold water Drain	Soup off-gas Cond.	15	C.W.D.		Connect line 762 and FI/85.
512	3/4"	B.I.	80	Outer soup pit water head	Outer soup head		Inner soup head		
513	1" 3/4"	B.I.	80	Pulsafeeder	Service room Pulsafeeder		Outer soup pit head		
514	1/8"	S.S.	40	D_2O Sampling line	Line 157		Coupling		Valve & coupling in line.
515	1/8"	S.S.	40	" "	Line 158		"		" " " " "
516	1/8"	S.S.	40	Soup gas Sample line	Line 137		Atmos.		Extension handle sample valve off line 1/2 x 1/2 x 1/8" Tee.
517	1/8"	S.S.	40	Helium Sampler line	Line 270		Coupling		Valve & coupling in line.
518	1/8"	S.S.	40	" "	Line 270		"		Valve & coupling in line. Connection below control valve in line 270.

-332-

Line No.	PIPE N.P.S.	PIPE Matl.	PIPE Sch.	TUBE O.D.xthk.Mtl.	SERVICE	FROM Item	FROM Eqpt.#	TO Item	TO Eqpt.#	REMARKS
519	1/8"	SS	40		Stack gas Sampler Line	Line 140		Atmos.		Extension handle valve in line.
520	1/8"	SS	40		Soup Sampling System	Line 482		Soup Dump Tanks	10	" " " "
521	1/8"	SS	40		" "	Line 481		Line 520		" " "
522	1/8"	SS	40		Cooling Water	C.W.		Isolation Chamber		
523	1/8"	SS	40		"	Isolation Chamber		C.W.D.		
524	1/8"	SS	40		Helium Sampler Line	Line 166		Coupling		
700				1/4" .049 SS	Pressure of soup in line 102	Line 125		Press. Cell Baldwin		Sylphon in line. PRCA/10 (Locate pressure cells high)
701				1/4" .049 SS	Pressure of soup PRC/2	Line 125				
702	1/4"	SS	80		LRCA for soup	Pressurizer	2	Weigh cell		Top connection of pressurizer
703	1/8"	SS	80		LRCA for soup	"	2	Weigh cell		Bot. connection of pressurizer.
704	1/4"	SS	80		LRCA for soup	"	2	Weigh cell		Middle connection of pressurizer.
705	Special cable				LRCA for soup	Microformer		Inst.LRCA/1		

-333-

Line No.	N.P.S.	PIPE Matl.	Sch.	TUBE O.D.xthk.Mtl.	SERVICE	FROM Item	Eqpt.#	TO Item	Eqpt.#	REMARKS
706				1/4" .049 Cu 5/16" .049 Al	LRC for soup (Air control)	Inst.LRC/1		Solenoid Valve		Al Inside shield-Cu outside. Solenoid valve in air line.
707		Wire			QRC/23 & QRC/25 Activity Controller	Line 709		Solenoid Valve in line 706		Control valve in line 105.
708				1/4" .049 Cu 5/16" .049 Al	Soup dump (line 106)	Solenoid Valve		Control Valve in line 106		
709		Wire			QRC/23-QRC/25 soup dump (Manual & Activity Controller)	QRC/23 QRC/25 Controllers		Solenoid Valve in Line 708		Connect line 707 (Manual control in line)
710		Wire			Soup press. control	pressure cell in line 701		Inst. PRCA/2		
711		Wire			Soup press. control to 10 kw boiler	PRC/2		Relay in Power line to 10 kw boiler		
712				1/4" .049 SS 1/4" .049 Cu	Oxygen to Pressurizer	Surge Tank	98	Line 720		2 control valves, check, capillary tubing. Connect lines 760, 886. Pair 1/2"-2500# flanges.
713		Wire			Temp. soup from heat Exch.	Line 102		TRA/3 Instr.		
714		Wire			Temp. soup from core	Line 101		TRA/3 Instr.		

Line No.	N.P.S.	PIPE Matl.	Sch.	TUBE O.D.xthk.Mtl.	SERVICE	FROM Item	FROM Eqpt.#	TO Item	TO Eqpt.#	REMARKS
715		Wire			Soup dump temp.	Line 112		Instr. TRA/3		
716		Wire			Power level recorder	Line 101		WR/5		
717		Wire			" "	Line 103		Line 716 (WR/5)		Connect line 716
719		Wire			Temp. Record	Instr. TRC/6		Line 142		
720				1/4" .049 Cu	Oxygen header	Oxygen tanks		Line 712		Oxygen bottles & Regulators in line. Connect line 872.
721	1/8"	SS	80		By-pass line at pressurizer	Line 704		Line 703		
722	1/2"	SS	40		Heat Exch. Level Controller (feedwater)	Top outlet heat exch.	3	Elec. Transmitter Instr. LRC/8		Seal pot in line.
723	1/2"	SS	40		" "	Bot. outlet heat exch.	3	" "		Seal pot in line.
724				1/4" .049 Cu	Heat Exch. Eqpt.#3 Level Controller (feedwater)	Instr. LIC/8		Control valve in line 309		QRC/23. Solenoid valve in line.
725		Wire			Temp. dump tank	Outer dump tank	64b	TI/17		

Line No.	N.P.S.	PIPE Matl.	Sch.	TUBE O.D.xthk.Mtl.	SERVICE	FROM Item	Eqpt.#	TO Item	Eqpt.#	REMARKS
726				1/4" .032 St.	D_2O oil pressure	Oil Reservoir	21	PI/71		
728	3/8"	SS	40		Pres. of off-gas (soup)	Line 116		PE/D cell		
729				1/4" .049 SS	Reflector pressure PRCA/D/10	Ref. side outlet	18	Pres. Cell		Syphon in line. Connect 855 and 734.
730		Wire			Reflector pressure PRCA/D/10	pres. cell Line 729		Inst. PRCA/D/10		
731		Wire			Soup pres. PRCA/D/10	Pres. cell Line 700		Inst. PRCA/D/10		
732		Rod			Liq. Level soup cond.	Cond. tank	11	Baldwin load cell		
733		Wire			Liq. level soup cond.	Brown load cell Line 732		Instr. LI/11		
734	1/2"	SS	40		D_2O Liq. Level LRC/12	Line 729		Foxboro D/P cell		
735	1/4"	SS	40		" "	Foxboro D/P cell		Line 736		
736	1/2"	SS	40		" "	Ref. vessel bot. outlet	18	Degas Changer		Connect line 735 & 855.
737				1/4" .049 SS	" "	Degas Chamber		Line 150		Valve with ext. handle in line.

Line No.	N.P.S.	PIPE Matl.	Sch.	TUBE O.D.xthk.Mtl.	SERVICE	FROM Item	Eqpt.#	TO Item	Eqpt.#	REMARKS
738		Wire			D_2O Liq. Level LRC/12	Foxboro D/P cell Line 734 & 735		Inst. LRC/12		
739				1/4" .049 Cu 5/16" .049 Al	" "	Inst. LRC/12		Control Valve in Line 155		Al inside shield, cu outside shield.
740				1/4" .049 Cu 5/16" .049 Al	D_2O Dump (air)	Manual Station		Dump valve in line 150		Solenoid valve in line. Al inside shield, Cu outside shield.
741		Rod			LRCA for soup	Weigh cell		LRCA		
742		Wire			D_2O dump (activity scram)	Scram		Solenoid Valve in line 740		Manual control in line.
743		Wire			D_2O gas cond.	Line 425		TI/17		
744		Wire			D_2O Refl. Temp. Control	Thermocouple in line 152		Inst. TRCA/13		Between 155 and 158
745				1/4" .049 Cu	D_2O Ref. Temp. Control (too hot)	Inst. TRCA/13		Control Valve in Line 310		Connect line 746
746				1/4" .049 Cu	" " (too cold)	Line 745		Control Valve in Line 313		
747				3/8" .049 SS	L1 soup dump tanks	Line 148		Top of Weigh tank		L1/14

[redacted]

Line No.	N.P.S.	PIPE Matl.	Sch.	TUBE O.D.xthk.Mtl.	SERVICE	FROM Item	Eqpt.#	TO Item	Eqpt.#	REMARKS
748				3/8" .049 SS	L1 soup dump tanks	Line 112		Bot. of weigh tank		Li/14
749		Rod			" "	Line 747		Wiancko cell		
750		Wire			" "	Wiancko cell		Instr.#14		
751				3/8" .035 SS	L1 D_2O dump tanks	D_2O dump tanks top outlet	22d	Top of weigh cell		
752				3/8" .035 SS	" "	D_2O dump tanks Liq. header	22d	Bot. of weigh cell		
753		Wire			Oxygen pressure	PC/86		Solenoid in Line 913		
754		Wire			L1 D_2O dump tanks	Wiancko cell		Inst. L1/15		
755		Wire			Soup pump temp.	Thermo-couple pump	4	Inst. TIA/16		
756		Wire			Temp. cond. from flame recomb.	Thermo-couple in line 127		Inst. Ta/17		
757		Wire			Temp. cooling water from flame recomb.	Thermo-couple in line 439		Inst. T1/17		
758		Wire			Temp. cool-water to flame recomb.	Thermo-couple in line 438		Inst. T1/17		

Line No.	N.P.S.	PIPE Matl.	Sch.	TUBE O.D.xthk.Mtl.	SERVICE	FROM Item	FROM Eqpt.#	TO Item	TO Eqpt.#	REMARKS
759		Wire			Temp. of soup dump tanks	Dump tank	64b	Inst. T1/17		
760				1/4" .049 Cu	Oxygen Pressure	Line 897		PC/86		
761		Wire			Temp. Emergency cooling water from dump	Thermo-couple in line 423		Inst. T1/17		
762		Wire			Temp. water from soup off-gas cond.	Line 511		Inst. T1/17		
763		Wire			Temp. soup cond.	Thermo-couple in line 211		Inst. T1/17		
764		Wire			Temp. cool-ing water to soup dump tank	Line 415		Inst. T1/17		
765		Wire			Temp. soup & soup gas to soup heat exch.	Line 104		Inst. T1/17		
766		Wire			Temp. soup from soup heat exch.	Line 105		Inst. T1/17		
767		Wire			Temp. soup to reactor from heat exch.	Line 111		Inst. T1/17		

Line No.	N.P.S.	PIPE Matl.	Sch.	TUBE O.D.xthk.Mtl.	SERVICE	FROM Item	FROM Eqpt.#	TO Item	TO Eqpt.#	REMARKS
768		Wire			Temp. D_2O to Ref. from D_2O cooler	Thermo-couple in line 154		Inst. T1/17		
769		Wire			Temp. boiler feedwater	Thermo-couple in line 309		Inst. T1/17		
770				1/4" .032 BI	Oil pres. to soup pump(alarm)	Line 454		Inst. PA/19		Connect line 891
771	1/4"	A-106	40		Press. cut-off 10 kw boiler	Line 807		Inst. PC/20		
772		Wire			Ammeter for soup pump	Soup pump		Inst. ICA/22		Connect line 920
773				1/4" .049 Cu	Soup pump remote control main steam line	Inst. air in control room		Control valve in line 316		Solenoid in line Controlled by Inst. 23.
774				1/4" .049 Cu 5/16" .049 Al	Remote control drain to condenser	Manual air Station		Control valve in line 321		Solenoid in line Controlled by Inst. 23 Al inside shield Cu outside shield.
775		Wire			Activity override (Main Steam)	Inst. #23		Solenoid valve in line 774		Connect line 776
776		Wire			Activity override (feedwater)	Line 775		Solenoid valve in line 773		
777		Wire			Inst. QRC/24	Line 168		QRC/24		

-340-

Line No.	N.P.S.	PIPE Matl.	Sch.	TUBE O.D.xthk.Mtl.	SERVICE	FROM Item	FROM Eqpt.#	TO Item	TO Eqpt.#	REMARKS
778		Wire			Activity Monitron HRE Steam to Steam Drum	Line 334		Inst. QRC/23		
779		Wire			Activity Monitron cond. drain	Line 322		Inst. QRC/26		
780				1/4" .049 Cu	Remote control HRE steam dump	Manual Station		Control Valve in line 323		Connect line 781 (Solenoid in line)
781				1/4" .049 Cu	" "	Line 780		Control Valve in line 330		
782				1/4" .049 Cu	Remote Control HRE Steam to turbine	Solenoid Valve		Control Valve in line 316		
783		Wire			Activity to override steam to turbine	Inst.#23		Solenoid valve in line 782		Connect line 784.
784		Wire			Activity override steam dump	Line 783		Solenoid valve in line 780		
785		Wire			Temp. Bot. Recomb. cond. & gas	Thermocouple on line 175		Inst. T1/17		
786		Wire			Temp. gas off flame recomb.	Thermocouple on line 142		Inst. T1/17		

Line No.	N.P.S.	PIPE Matl.	Sch.	TUBE O.D.xthk.Mtl.	SERVICE	FROM Item	FROM Eqpt.#	TO Item	TO Eqpt.#	REMARKS
787		Wire			Temp. from soup off-gas cond.	Thermo-couple on line 144		Inst. T1/17		
788		Wire			Temp. of D_2O off-gas from cold trap	Thermo-couple on line 84a		Inst. T1/17		
789		Wire			Temp. of D_2O off-gas from cold trap	Thermo-couple on line 84b		Inst. T1/17		
790		Wire			Temp. cool-ing water from D_2O dump tanks	Line 419		Inst. T1/17		
791		Wire			Steam Monitron Interlock	Line 775		Solenoid in line 724		
792		Wire			Temp. of D_2O off-gas in charcoal absorber	Charcoal Absorber	30	Inst. T1/17		
793		Wire			" " "	" "	30	Inst. T1/17		
794		Wire			" " "	" "	30	Inst. T1/17		
795		Wire			Temp. of soup off-gas in charcoal absorber	" "	16	Inst. T1/17		
796		Wire			" " "	" "	16	Inst. T1/17		

[redacted]

Line No.	N.P.S.	PIPE Matl.	Sch.	TUBE O.D.xthk.Mtl.	SERVICE	FROM Item	FROM Eqpt.#	TO Item	TO Eqpt.#	REMARKS
797		Wire			Temp. of soup off-gas in charcoal absorber	Charcoal Absorber	16	Inst. T1/17		
798		Wire			" "	" "	16	Inst. T1/17		
799				1/4" .049 Cu	Helium Supply Control for soup refl. Differen-tial press.	Inst. PRCA/D/10		Air Control Valve in Line 267		Connect line 801
800				1/4" .049 Cu	Helium cut-off D_2O Dump	Line 740		Air Control valve in line 267		Solenoid valve in line.
801				1/4" .049 Cu 5/16" .049 Al	He Bleed from Reactor	Line 799		Air Control in line 270		Al inside shield Cu outside shield.
802	1/4"	B.I.	40		Cooling oil inter-lock on soup oil system	Line 475		Inst. #21		
803		Wire			Interlock on Oxygen pressure	PC/86		Solenoid in line 915		
804		Wire			D_2O Cir. pump Temp.	Thermo-couple on Eqpt.#19		Inst.#40		
805	1/4"	B.I.	40		Steam Pres. to outer dump tanks	Line 477		Inst. #41		

-343-

[redacted]

Line No.	N.P.S.	PIPE Matl.	Sch.	TUBE O.D.xthk.Mtl.	SERVICE	FROM Item	FROM Eqpt.#	TO Item	TO Eqpt.#	REMARKS
806		Wire			Under Current relay for D_2O pump	D_2O pump switch box		Inst.#43		
807	1/4" 3/4"	A-106 A-106	40 40		Liq. level 10kw boiler	10 kw Boiler	63	LC/48-High Pressure		Seal pot in line-Connect line 771-3/4" from seal pot to boiler.
808				1/4" .049 Cu 5/16" .049 Al	D_2O off-gas pres.	Line 165		Inst.P1/50		Sylphon in line Al inside shield copper outside shield.
809	1/2"	SS	40		Liq. control & alarm 40 kw boiler	40 kw boiler	62	Inst.#52		Seal pot in line.
810	1/2"	SS	40		" "	" "	62	Inst. #52		Seal pot in line.
811		Wire				Line 422		T1/17		
812		Wire			Deuterium (D_2O off-gas) Detector	Line 168		Deuterium Det.	94	
813		Wire			Pres. soup temp.	Pressurizer	2	TRCA/29		
814		Wire			Mech. Alarm D_2O off-gas	Valve in line 168		Relay in line		
815		Wire			Temp.	T1/17		Item 22		
816		Wire			Mech. Alarm D_2O off-gas	Valve in line 167		Relay in line		Outside shield.

-344-

Line No.	N.P.S.	PIPE Matl.	Sch.	TUBE O.D.xthk.Mtl.	SERVICE	FROM Item	FROM Eqpt.#	TO Item	TO Eqpt.#	REMARKS
817				1/4" .049 Cu		PA-76		Line 818		
818				1/4" .049 Cu		PA-47		Line 265		
819				1/4" .049 Cu	Pres. cooling oil to D_2O pump	PA-69		Line 820		
820				1/4" .049 Cu	Pres. cooling oil - D_2O pump	PA-44		Line 452		Connect line 819
821				1/4" .049 Cu		PC-46		Line 428		
822		Wire			D_2O Detector " pump oil	DRA-26		Item		Oil Reservoir
823	1/4"	B.I.	40			PI-71		Line 180		" "
824		Wire			Calrod heaters	Ref. Temp. Control		Item 63		10 kw Boiler
825		Wire			Temp. Ref. Shell	TI/17		Item 18		Ref. Vessel bottom
826		Wire			" "	TI/17		Item 18		Top flange
827		Wire			" "	TI/17		Item 18		Top Ref. vessel
828		Wire			Activity Indicator	Q/59-64		Item 18		Bot. of Ref. vessel
829		Wire			Temp. of D_2O off-gas in Charcoal Absorber	Charcoal Absorber	30	Inst. TI/17		
830		Wire			Temp. soup off-gas in charcoal abs.	" "	16b	" "		

Line Nos. 817 - 830 [redacted]

[redacted]

Line No.	N.P.S.	PIPE Matl.	Sch.	TUBE O.D.xthk.Mtl.	SERVICE	FROM Item	FROM Eqpt.#	TO Item	TO Eqpt.#	REMARKS
831		Wire			Temp. soup off-gas in Charcoal Absorber	Charcoal Absorber	16b	Inst.Ti/17		
832				1/4" .049 Cu 5/16" .049 Al		Valve in line 125		Solenoid valve		Al inside shield
833				1/4" .049 Cu		PI-38		Line 493		
834				1/4" .049 Cu		PI-35		Line 436		
835		Wire		[illegible]		QRC-25		Item 5		Monitron
836				1/4" .049 Cu 5/16" .049 Al		Valve in line 126		Solenoid valve outside shield		
837				5/16" .049 Al 1/4" .049 Cu		Solenoid valve outside shield		Valve in line 114		Al inside shield.
838		Wire				QRC-68		Stack		Monitron to stack
839		Wire			Meas. Steam Flow	PR-31		Transmitter		Orifice in line 316
840				1/4" .049 Cu	Steam pres.	PR-31		Line 316		Connect line 893 Autoclave surge check in line.
841				1/4" .049 Cu	Steam pres.	PI-32		Line 316		Autoclave surge check in line.
842		Wire			Oxygen pres.	PRCA/D/88		D.P. cell across orifice in line 712		

-346-

Line No.	N.P.S.	PIPE Matl.	Sch.	SERVICE	FROM Item	Eqpt.#	TO Item	Eqpt.#	REMARKS
843	1/4"	A-106	40	40 kw pres. Control	PI-33		Line 317		Valve & Surge Check in line. Connect line 844.
844	1/4"	A-106	40	40 kw pres. Control	Line 843		PC-45		
845		Wire		Temp. soup char. abs.	Char. abs.	16b	TI/17		
846				Seal pot	Line 140		Line 138		Seal pot in line.
847		Wire		Temp. soup char. abs.	Char. abs.	16b	TI/17		
848		Wire		Alarm circuit on D_2O off-gas	Alarm		Relays & T.C.s' in line		Cold trap cut off and temp. alarm circuit.
849					PI-77		Line 308		Item 65
850		Wire		Solenoid on Valve	Line 837		Line 709		QRC/23 & 25
851		Wire		Soup Temp.	TIA/4		Line 101		Temp. soup from core.
852					PI-42		Line 309		
853		Wire		He Inter-lock	LRCA-12		Solenoid in line 800		
854		Wire		Heat Exc. Level Con-troller	Elec. Transmitter		LRC/8		
855	1/2"	SS	40	Reflector level	Line 736		Line 729		Junction with 734.
856	1/4"	A-106	40	Liquid level 10kw Boiler	10kw boiler	63	LC/48		

Line Nos. 843 - 856 [redacted]

-347-

[redacted]

Line No.	N.P.S.	PIPE Matl.	Sch.	TUBE O.D.xthk.Mtl.	SERVICE	FROM Item	Eqpt.#	TO Item	Eqpt.#	REMARKS
857		Wire			D_2O off-gas temp.	Line 171		Ti-17		
858		Wire			Cat. Recomb. Bed Temp.	Line 27		Ti/92		6 leads from Item 27
859				1/4" .049 Cu 5/16" .049 Al	Decontamination control valve	Manual Sta.		Control valve in line I31		Al inside shield Cu outside shield
861				1/4" .049 SS	Pres. of soup gas	Line 116		PE→PR/78		
862		Wire			PRCA/D-79	PE/D in line 728		PRCA/D-79		
863		Wire				PE in line 861		PR/78		
864		Wire			Temp. Record	Line 116		TI/17		Soup gas cond. Item 14.
865		Wire			" "	Soup gas flame recomb.	13	TI/17		
866		Wire			" "	Line 439		TI/92		Water temp. from soup gas flame recomb. Item 13.
867		Wire			" "	Soup gas flame recomb.	13	TRA/3		
868		Wire			" "	Line 143		TI/17		Soup off-gas cond. Item 15
869		Wire			" "	Line 144		TI/17		" " " " " "
870		Wire			" "	Cold Trap	89a	TI/17		

Line No.	N.P.S.	PIPE Matl.	Sch.	TUBE O.D.xthk.Mtl.	SERVICE	FROM Item	FROM Eqpt.#	TO Item	TO Eqpt.#	REMARKS
871		Wire			Temp. Record	Cold Trap	89b	TI/17		
872				1/4" .049 Cu	Oxygen pres. alarm	Line 720		PA/87		
873		Wire			Temp. cooling water	Line 441		TI/17		
874		Wire			Temp. soup gas cond.	Soup gas Cond.	14	TI/17		
875		Wire			Temp. D_2O	Line 181		TI/17		Off of D_2O Liquid Header.
876		Wire			" "	" "		" "		" " " " "
877		Wire			Temp. cooling water	Line 433		TI/17		Item 86
878		Wire			Temp. of soup	Line 227		TI/17		Item 12
879		Wire			" "	Line 111		TI/17		Item 12
880		Wire			" "	Line 106		TI/17		Above dump valve
881		Wire			Temp. of soup	Outer dump tank	64a	TI/17		
882				1/4" .049 Cu	Pres. in He line.	Line 267		PI-80		After valves.
883		Wire			Limit on He flow	LRC-12		Solenoid in line 800		
884				1/4" .049 Cu	Air to Control valve	Valve in line 317		Solenoid valve		

Line No.	N.P.S.	PIPE Matl.	Sch.	TUBE O.D.xthk.Mtl.	SERVICE	FROM Item	FROM Eqpt.#	TO Item	TO Eqpt.#	REMARKS
885		Wire			Monitron interlock	Solenoid valve in line 884		QRC/23		
886	1/4"	SS	80		DP cell (oxygen) lines	Line 712		DP cell		Orifice in line 712.
887		Wire			Temp. Steam	Line 426		TRA/3		
888				1/4" .049 Cu 5/16" .049 Al	Air Line	Valve in line 105		Solenoid in line 706		Al inside, Cu outside (LRC-1)
889				1/4" .049 Cu	Temp. control of water Item 28	TC in line 425		Control valve in line 424		
890		Wire			Cond. soup gas flame recomb.	Line 128		TI/17		
891		Wire				Line 770		PCA/72		
892		Wire			Pres. vent valve Solenoid	Solenoid in line 832		PRCA/2		
893		Wire			Interlock Circuit	Line 840		PC/30		
894		Wire			D_2O pump overcurrent relay	ICA/51		D_2O pump	19	
895	1/4"	SS	80		Accumulator	Item 95		Line 886		

-350-

[redacted]

Line No.	N.P.S.	PIPE Matl.	Sch.	TUBE O.D.xthk.Mtl.	SERVICE	FROM Item	FROM Eqpt.#	TO Item	TO Eqpt.#	REMARKS
896				1/4" .049 Cu	Bldg. cond. return	Valves in line 347 and 302		Solenoid & Manual Station		
897	1/8"	SS	40		Oxygen System	Accumulator 95		Valve 712C		Pressurizing valve bellows
898		Wire			Temp. Indicator soup system	Line 149		TI		Items 9 and 10.
899		Wire			" "	Line 112		TI/17		Items 9 and 10.
900		Wire			Mech. Alarm soup off-gas	Valve in line 136		Relay in line		
901		Wire			" "	Valve in line 137		Relay in line		
902				1/4" .049 Cu 5/16" .049 Al	Air line to valve	Manual air Station		Valve in line 137		
903				1/4" .049 Cu 5/16" .049 Al	" "	" "		Valve in line 136		
904		Wire			Alarm circuit on soup off-gas	Alarm		Relays & T.C.s' in line.		Cold trap cut-off & temp. alarm circuit.
905		Wire			" "	Line 458		Cold trap	89b	" " "
906		Wire			Thermo-static alarm soup cold traps	TC in line		" "	89a	

[redacted]

Line No.	N.P.S.	PIPE Matl.	Sch.	TUBE O.D.xthk.Mtl.	SERVICE	FROM Item	FROM Eqpt.#	TO Item	TO Eqpt.#	REMARKS
907		Wire			Thermostatic alarm soup cold traps	TC in line		Cold Trap	89b	
908		Wire			Thermostatic Alarm D_2O cold traps	TC in line		Cold Trap	84a	
909		Wire			" "	TC in line		Cold Trap	84b	
910				1/4" .049 Cu 5/16" .049 Al	Air line to valve	Manual air sta.		Valve in line 168		
911				1/4" .049 Cu 5/16" .049 Al	" "	" "		Valve in line 167		
912		Wire			Temp. water leaving soup cooler	Line 510		TI		Item 7
913				1/4" .049 Cu 5/16" .049 Al	Air line	PRCA/D/88		Valve in line 712		Connect solenoid valve in line. Al inside shield.
914		Wire			Temp. soup leaving soup cooler	Line 108		TI/17		Item 7
915				1/4" .049 Cu 5/16" .049 Al	Air to valve in line 712	Manual Sta.		Valve in line 712		Connect solenoid valve in line.
916		Wire			Temp. soup	Line 114		TI/17		
917		Wire			Soup gas Item 10b	Line 115		TI/17		
918	3/8"	SS	40		Pres. soup off-gas	Line 116		PE/D cell		

Line No.	N.P.S.	PIPE Matl.	Sch.	TUBE O.D.xthk.Mtl.	SERVICE	FROM Item	FROM Eqpt.#	TO Item	TO Eqpt.#	REMARKS
919				1/4" .049 Cu	10 kw Boiler level Control	Pressure Diff. Cell		LC-48		
920		Wire			Soup pump over current relay	Line 772		IQA-18		
921	1/8"	SS	80		Oxygen System	Line 482		Pressure Cell		Oxygen metering station.
922				1/4" .049 Cu		Air Supply		D.P. Cell		
923		Wire			Time Delay on cond. return	Solenoid in line 896		Timer		
924		Wire			Pres. & Temp. Interlocks	TRCA/29		PRCA/2		
925		Wire			" "	TRCA/29		Line 892		
926				5/16" .049 Al	Air line to valve 159	Valve in line 159		Manual Control		
927		Wire			Temp. D_2O Cold Trap	Cold Trap	84a	TIA/91		
928		Wire			" "	" "	84b	TIA/91		
929		Wire			Temp. soup cold trap	" "	89a	TIA/91		
930		Wire			" "	" "	89b	TIA/91		

Line No.	N.P.S.	PIPE Matl.	Sch.	TUBE O.D.xthk.Mtl.	SERVICE	FROM Item	FROM Eqpt.#	TO Item	TO Eqpt.#	REMARKS
931		Wire			Temp. C.W. to off-gas cond.	Line 507		TI/17		
932		Wire			Temp. D_2O Cat. Recomb.	Cat. Recomb.	96	TI/92		
933		Wire			" "	" "	88	TI/92		
934				5/16" .049 Al	Air to Valve 166	Valve in line 166		Manual Control		
935		Wire			Temp. Recombiner Bed.	Cat. Recomb.	88	TI/92		
936		Wire			Soup Refrigerant Temp. Control	Expansion Valve		Line 461		
937		Wire			" "	" "		Line 459		
938		Wire			D_2O Refrigerant Temp. Control	" "		Line 465		
939		Wire			" "	" "		Line 463		

-354-

Line No.	PIPE N.P.S.	Matl.	Sch.	SERVICE	FROM Item	Eqpt.#	TO Item	Eqpt.#	REMARKS
950	1/4"	SS	40	Heat Exch. Leak Detector	Heat Exch.	3	Line 322		Flanges and Extension Handle valve in line.
951	1/4"	SS	40	Heat Exch. Leak Detector	Heat Exch.	3			End of Line is capped for decontamination use.
952	1/8"	SS	40	Heat Exch. Leak Detector	Line 951		Pres. Elec. Trans. Cell		Modified pressure gage transmitter.

-355-

NOTE: All process line information is for operation at 1000 kw.

I. Line Number Nomenclature

The line numbers are divided into five sections as follows:

1. PROCESS PIPING

   a. Soup System - Line 101-199 incl, and 210-249 inc. Includes all lines normally carrying soup solutions, overflow lines, vapor and condensate lines, and vacuum transfer lines.

   b. D_2O System - Lines 150-209 incl. Includes all lines normally carrying D_2O, overflow lines, vapor and condensate lines and vacuum transfer lines.

   c. Pressurizing System - (Helium) - Lines 250-299 incl. Pressure and Helium relief.

2. POWER PIPING SYSTEM. Lines 300-399 incl. Includes all lines carrying steam or condensate, and boiler feedwater system.

3. SERVICE PIPING. Lines 400-699 incl. (Excluding power system). Includes all steam, water, and vacuum service lines, vent lines, sampler lines, emergency cooling water, oil cooling lines for soup and D_2O and refrigerant lines.

4. INSTRUMENT PIPING. Lines 700-950 incl. Includes all air instrument and electrical instrument lines.

5. LEAK DETECTION SYSTEM. Lines 950

II. Line Identification

Line Numbers
Shield Line
Process Lines
Vapor and Gas Lines
Air Lines
Helium Lines
Oxygen Lines

III. Pipe Line Code

Typical Code on Line

1½" Sch. 80 Steel Pipe — 1½S80
1" Sch. 40 Black Iron Pipe — 1B40
3/4" Sch. 80 Corrosion Resistant Pipe — ¾C80
1/2" Sch. 40 Galvanized Iron Pipe — ½G40

IV. General Legend

Condensate Drain (Bldg.) — CD
Cooling Water — CW
Cooling Water Drain — CWD
Deuterium Detector — Dd
D_2O Detector — DO
Elec. Transmitter — ET
(Below Air Operated Valves) - Fails Closed — FC
Feed Indicator — FI
(Below Air Operated Valves) - Fails Open — FO
Specific Gravity Indicator — GI
Electric Alarm — IA
Electric Indicator Controller — IIA
Electric Controller — IC

IV. (Continued)

Electric Indicator — II
Liquid Alarm — LA
Liquid Level Indicator — LI
Liquid Indicator Alarm — LIA
Liquid Controller — LC
Liquid Recorder and Alarm — LRA
Liquid Recorder and Controller — LRC
Pressure and Vacuum Indicator — PIVI
Pressure Indicator — PI
Pressure Recorder — PR
Pressure Controller-Differential — PCD
Pressure Cell — PE
Pressure Cell Differential — PED
Pressure Indicator Controller — PIC
Activity Indicator — QI
Activity Alarm — QA
Activity Indicator and Alarm — QIA
Activity Indicator and Controller — QIC
Temperature Alarm — TA
Temperature Controller — TC
Temperature Indicator — TI
Temperature Indicator and Alarm — TIA
Temperature Recorder — TR
Temperature Recorder and Controller — TRC
Thermometer Well — TW

V. Valve and Fitting Symbols

Safety or Relief Valve
Manually Operated Valve
Check Valve
Solenoid Valve
Angle Valve
Expansion Valve
Valve with Ext. Handle (Outside Shield)
Air Operated Valve
Mech. Coupling
Air Operated Angle Valve
Reducing Coupling
Orifice
Flanged Joint
Union (Threaded)
Valve Normally Closed
Valve-Position Variable
Valve Normally Open
Motor-Operated Valve
Elec. Relay
Load Cell
Surge Check

VI. Instrumentation and Miscellaneous Symbols

Equipment Numbers — 5
Instrument Number — Instrument
Point of Multi Instr.
When Alarm is Used — LRA 16 LI-16
Screw — 1
Manual-Remote Controlled — M
Strainer — 2
Trap — 7
Elec. Timer — ET
Thermostat — TH

(On All Air Operated Valves) — 3 15
Figure to Left indicates lower air operating pressure
Figure to right indicates upper air operating pressure
Instruments shown in this manner are located in the control room — 3 15

VII. General Notes

1. All instruments designated by the letter "I" or "R" (Such as TI or TR) will be located outside shield.
2. Enthalpy of Liquid — h_f
3. Enthalpy of Gas or Steam — h_g
4. All TI will go to a multipoint temperature indicator (range of 0-300°C).

HDE
FLOWSHEET IDENTIFICATION CODE
APPENDIX C

APPENDIX D

Insulation Schedule

Reactor equipment and piping has been insulated with the philosophy that no insulation shall be provided inside the reactor shield unless necessary

(1) to prevent excessive loss of heat from the high temperature soup or D_2O recirculating system

(2) to prevent excessive exit air temperatures from the cells

(3) to prevent condensation on water lines and jackets where the dripping condensate can cause trouble

(4) to prevent undue loads on cold traps and the refrigeration system

(5) to prevent injury to operating personnel.

The following equipment and piping insulation specifications list only those items and lines which have been insulated to date.

HRE EQUIPMENT INSULATION SPECIFICATIONS

All surfaces of equipment to be insulated must be thoroughly clean and free of rust, dirt, grease, etc.

Where items of equipment, similarly insulated, are not far enough apart to permit individual insulation, said items may be insulated as a whole. However all voids within insulation are to be filled with insulation of the type required per schedule.

Insulation inside shield and underground shall be bound in place with aluminum wire or eyelet strap and covered with glass cloth membrane. Water glass shall be used for cementing and protective coating.

All other insulation shall be installed per manufacturer's specifications.

FOAMGLAS (FG)

As manufactured by Pittsburgh Corning Corporation, custom (factory) fitted insulation shall be used as provided.

All other insulation shall be shaped and fitted by field using pipe, tube or lag sections where applicable.

Care shall be exercised to fill all voids with insulation as practicable.

85% MAGNESIA (M)

Johns- Manville or equivalent.

Where standard sections of insulation cannot be used due to complex form of equipment "M" type cement shall be used thereon.

EAGLE-PICHER SUPER "66" INSULATING CEMENT

Eagle-Picher Company or equivalent.

Shall be applied per manufacturer's specifications and finish coated with Eagle-Picher "106" finishing cement.

CORK

Mundet Cork Corporation or equivalent.

Shall be applied per manufacturer's specifications. All voids shall be filled with Regranulated Cork packed solid.

HRE EQUIPMENT INSULATION SCHEDULE

Eqpt No.	Name	Insulation Type	Insulation Thick	Insulation Shape	Insulation Size	Am't Req'd	Remarks
2	Pressurizer	FG	3				Custom fit
3	Steam Generator	FG	3				Custom fit
4	Soup Circ. Pump	FG	3				Custom fit - Head Only
9	Soup Evaporator	FG FG	3 3	Pipe Pipe	6 IPS 8 IPS	2.5' 3.5'	Cut end covers from flat lag 3" thick
10	Soup Dump Tank	FG	2	Tube	11 OD	22'	
18	Reflector vessel	FG	3				Custom fit
20	D_2O Cooler	EP	2		Cement	200#	Verniculite
24	D_2O Evaporator	FG	3	Pipe	6 IPS 8 IPS	3.5' 2'	Tank Steam jacket cut end covers from flat lag 3" thick
27	D_2O Recombiner	M	2	Pipe			
28	D_2O Gas Condenser	M	1-1/2	Pipe	2-1/2 IPS 1-1/2 IPS	32' 3.5'	Insulate outer units then center with segments required Vapor in and vapor header out
39	Steam Drum	FG	3		Cement	400#	Build up insulation of E-P super "66" or equivalent
58	Steam Calorimeter	M	2				
59	Steam Separator	M	2		Cement	30#	Build up insulation of "M" type cement
62	40 K.W. Boiler	M	3	Pipe	6" IPS Cement	14' 30#	Use "M" type cement for flange insulation
63	10 K.W. Boiler	FG	3				Custom fit
64	Outer Dump Tanks	M	2	Pipe Tube	8" IPS 11" OD	3' 22'	Underground protection required. See spec.
67	Vacuum pump for St. Cond.	M	2		Cement	30#	Build up insulation of "M" type cement on Oil separator only.
84	Cold Traps, D_2O	Cork	4	Pipe	3" IPS	24'	
86	D_2O Off-Gas Condenser	M	1-1/2	Pipe	3" IPS	10.5'	
88	Soup Cat. Recombiner	FG	3				
89	Cold Traps, Soup	FG	3	Pipe	3" IPS	7'	

HRE PIPING INSULATION SPECIFICATIONS

Piping insulation schedule shall be referred to for type, size and location of insulation.

All lines must test tight and be clean before application of insulation.

Where two or more insulated lines run parallel and are not far enough apart to allow individual insulation, said lines may be insulated as a whole using block insulation of the maximum thickness required for the enclosed lines. Block insulation shall be used to fill spaces between pipes. Where standard sections of pipe insulation can not be used due to interference or non-standard bends, field shall improvise from bulk materials furnished.

FOAMGLAS (FG)

Foamglas insulation as manufactured by Pittsburgh Corning Corporation shall be used inside shield at all locations per schedule.

Factory fitted insulation shall be used on all valves and flanges. Factory fitted insulation shall also be used on all tees, ells and field bends of 1-1/2 in. or larger pipe.

All joint surfaces ahll be coated with water glass cement. Insulation shall be wired in place at not greater than 9 in. centers using aluminum wire. Wires shall be embedded in insulation and the twisted ends turned in.

Insulation shall be covered with glass cloth membrane (Glasfab by P-C or equiv.) cemented on with water glass.

A protective coat of water glass shall be applied over-all.

85% MAGNESIA (M)

Johns-Manville or equivalent shall be used at all locations per schedule.

Where used within shield "M" type insulation shall be wired in place at not less than 9 in. centers using aluminum wire. Following which said insulation shall be covered with glass cloth membrane cemented in place with water glass. Finally a protective coat of water glass shall be applied over-all.

All other "M" type insulation shall be installed per manufacturer's specifications.

CORK

Cork as manufactured by the Mundet Cork Corporation or equivalent shall be used at all locations per schedule.

Insulation shall be wired in place at not greater than 6 in. centers using aluminum wire. Twisted ends of wires shall be turned in.

Factory made fitting covers shall be used where required.

Insulation shall be covered with glass cloth membrane cemented on with water glass.

A protective coat of water glass shall be applied over-all.

ANTI-SWEAT (AS)

J-M or equivalent of standard thickness shall be used at all locations per schedule.

Insulation shall be installed per manufacturer's specifications.

HRE PIPING INSULATION SCHEDULE

Soup System

Line No.	Service	Length of Run*	I.P.S.	Insulation Type	Insulation Thickness	Remarks	
101	Soup	3	1-1/2	FG	3	1 bend	3 flanges
102	Soup	3	1-1/2	FG	3	2 bend	2 flanges
103	Soup	1.5	1-1/2	FG	3		1 flanges
112	Soup	3.5	1	FG	1-1/2		
115	Soup gas & vapor	19	2	FG	3		
116	Soup gas	5	1	FG	3		1 orifice
142	Soup off-gas	1.5	1	FG	3		

*Where line connects with pressure vessel assembly, length of run shown hereon is to line flange at said vessel.

Turbine Steam System

309	B.F. Water	27.5	1	M	Standard	To face of shield (1 chk valve, 3 valves)	
		14.5		FG	1-1/2	1 flange	
310	B.F. Water	7.5	1	M	Standard	1 chk valve	1 valve
311	B.F. Water	36.5	1	M	Standard	To location of D_2O cooler	
312	B.F. Water	36.5	1	M	Standard	From location of D_2O cooler	
316	Steam	53	4	M	2		2 valves
317	Steam	13	1-1/2	M	1-1/2		1 valve
320	Blow down	11	2	M	1-1/2	Insulation from elbow in trench to condenser	
324	Steam	41+	2-1/2	M	2		1 valve
325	Steam	8.5	1-1/2	M	1-1/2		1 valve
327	Condensate	10	1/2	M	Standard	1 valve, 1 strainer, 1 trap	
328	Safety	11.5	6	M	2	Insul. inside bldg. & 9' above ground outside	1 valve
331	Steam	2	1/2	M	Standard		1 valve
332	Condensate	5	1/2	M	Standard		1 flange
334	Steam	22	4	FG	3		1 flange
335	Condensate	19	1/2	FG	1		

Service Piping Inside Shield

Line No.	Service	Length of Run	I.P.S.	Insulation Type	Insulation Thickness	Remarks
426	Steam	5	1	M	1-1/2	In refl. cell only
		13		FG	1-1/2	Thru shield and to flange at pressure vessel
427	Condensate	11.5	3/4	FG	1-1/2	Thru shield and to flange at pressure vessel
		10.5		M	1-1/2	In reflector cell only
430	Steam	10	3/4	FG	1-1/2	
431	Condensate	10.5	3/4	FG	1-1/2	
434	Steam	13.5	1/2	M	Standard	
435	Condensate	13.5	1/2	M	Standard	
436	Steam	17	1/2	FG	1-1/2	
437	Condensate	17	1/2	FG	1-1/2	
448	Steam	4	1/2	FG	1-1/2	
449	Condensate	4	1/2	FG	1-1/2	
458	Refr. Supply	5	3/8 Tube	FG	2	
459	Refr. Suct.	7	1-1/8 Tube	FG	1-1/2	
460	Refr. Supply	4.5	3/8 Tube	FG	2	
461	Refr. Suct.	6	1-1/8 Tube	FG	1-1/2	
462	Refr. Supply	1	3/8 Tube	Cork	Standard	
463	Refr. Suct.	3	7/8 Tube	Cork	Standard	
464	Refr. Supply	1	3/8 Tube	Cork	Standard	
465	Refr. Suct.	2.5	7/8 Tube	Cork	Standard	
477	Steam	30.5	1	See Remarks		Insul./Note 3d, Dwg. D-8910 - Buried in Floor
478	Steam	2.5	3/4	See Remarks		Insul./Note 3d, Dwg. D-8910 - Buried in Floor
479	Condensate	2.5	1/2	See Remarks		Insul./Note 3d, Dwg. D-8910 - Buried in Floor
480	Condensate	21	1/2	See Remarks		Insul./Note 3d, Dwg. D-8910 - Buried in Floor

Service Piping on Face of Shield

Line No.	Service	Length of Run	I.P.S.	Insulation Type	Insulation Thickness	Remarks
430	Steam	1.5	3/4	AS	Standard	
435	Condensate	4	1/2	M	Standard	
436	Steam	1.5	1/2	M	Standard	
448	Steam	7.5	1/2	M	Standard	
449	Condensate	7	1/2	M	Standard	
457	Refrig. Suct.	20 +	1-3/8 Tube	Cork	Standard	
459	Refrig. Suct.	6.25	1-1/8 Tube	Cork	Standard	Insulate as bundle
461	Refrig. Suct.	6.25	1-1/8 Tube	Cork	Standard	Insulate as bundle
463	Refrig. Suct.	5.6	7/8 Tube	Cork	Standard	Insulate as bundle
465	Refrig. Suct.	5.6	7/8 Tube	Cork	Standard	Insulate as bundle
477	Steam	7	1	M	Standard	
480	Condensate	4	1/2	M	Standard	

D_2O System

150	D_2O	1.5	2	M	1-1/2	Insul. exposed portion to dump valve
		5		See Rem.	-	J.M. Asbes. cement in shield
		3	2	FG	2	Press. vessel compartment
152	D_2O	12.5	1	M	Standard	1 flange
153	D_2O	5	1	M	Standard	1 flange
154	D_2O	12	1	M	Standard	In refl. cell
		10		FG	1-1/2	Thru shield to flange at refl. vessel

APPENDIX: E

Nuclear Constants of the HRE

The following tabulation of nuclear calculations was made to determine, or to provide a check on, the values of the "nuclear constants" of the HRE and to estimate their limits of error.

An approximate method (described in LA-524) was used to solve the two-group problem

In attempting to determine the limits of error, particular attention was given to these facts:

A. Certain of the two-group constants are not accurately known, in particular the ratio of the fast diffusion constants for heavy and light water.

B. There is no clean-cut, accurate method for determining the overall effect of the steel core tank.

C. Two-group theory is not strictly valid for an H_2O - D_2O system, the magnitude of the error being uncertain.

In tabulating the results, the conditions for which the calculation was made appear on the right hand side. Notation is as follows:

C = Fuel concentration, in grams uranium/kilogram H_2O

K = Effective multiplication constant of reactor (K = 1 for criticality)

T = Average temperature in core, in °C

T_R = Average temperature in reflector, in °C

ρ = Average density of H_2O in core, in gm./cc.

p = Core pressure

τ = Prompt generation time, in sec.

A. Operation with D_2O Reflector

1. The amount of excess reactivity needed to overcome the poisoning effect of the steel core tank:

$$\frac{\Delta K}{K} = (4.5 \pm 1.5)\%$$

$T = 230°C$
$T_R = 164°C$

2. Critical concentration:

C (critical) = 43.0 ± 6.1 gm.U/Kg.H_2O — T = 230°C

= (35.4 ± 5 gm.U/liter H_2O) — T_R = 164°C

3. The density coefficient of reactivity at constant temperature, averaged from ρ = .823 to ρ = .883:

$$\left(\frac{\partial K}{\partial \rho}\right)_T = .65 \pm .07 \ \frac{\text{cm.}^3}{\text{gm.}}$$

T = 230°C
T_R = 164°C
C = 43 gm./Kgm.

4. The temperature coefficient of reactivity at constant density, averaged from T = 230°C to T = 180°C:

$$\left(\frac{\partial K}{\partial T}\right)_\rho = -(7.7 \pm .83) \times 10^{-5} \ {}^\circ C^{-1}$$

T_R = 164°C
C = 43 gm./Kgm.

5. The prompt neutron generation time:

$$\tau = (7.0 \pm .7) \times 10^{-5} \text{ Sec.}$$

T = 230°C
T_R = 164°C
C = 43 gm./Kgm.

6. The amount of reactivity controlled by reflector (or reactivity change made by dumping reflector at operating temperature):

$$\frac{\Delta K}{K} = (24.5 \pm 3)\%$$

T = 230°C
T_R = 164°C
C = 43 gm./Kgm.

7. The reactivity controlled by Control Plates:
(From CF 51-9-131)

ΔK = 1.44% per plate

T = 250°C
T_R = 175°C
C = 48.7 gm./Kgm.

8. The reflector temperature coefficient of reactivity at constant core temperature, averaged from T_R = 164°C to T_R = 100°C:

$$\left(\frac{\partial K}{\partial T_R}\right)_T = -(1.4 \pm .5) \times 10^{-4} \ {}^\circ C^{-1}$$

T = 230°C
C = 39.4 gm./Kgm.

or

$$\frac{\Delta(\text{critical mass})}{\Delta T_R} = .84 \pm .30 \text{ gm.U/}^\circ C$$

B. Operation with H_2O Reflector

1. The amount of excess reactivity needed to overcome the poisoning of the steel core shell:

$$\frac{\Delta K}{K} = (5 \pm 1)\%$$

$T = 230^\circ C$
$T_R = 164^\circ C$
$C = 54.2$ gm./Kgm.

2. The critical concentrations:

C (critical) = 34.1 ± 2.7 gm.U/Kgm H_2O — $T = 20^\circ C$, $T_R = 20^\circ C$

C (critical) = 54.2 ± 4.3 gm.U/Kgm H_2O — $T = 230^\circ C$, $T_R = 164^\circ C$

C (critical) = 59.6 ± 4.7 gm./Kgm. — $T = 250^\circ C$, $T_R = 175^\circ C$

3. The density coefficient of reactivity at constant temperature, averaged from $\rho = .854$ to $\rho = .794$:

$$\left(\frac{\partial K}{\partial \rho}\right)_T = .81 \frac{cm.^3}{gm.}$$

(No estimate of error)

$T = 250^\circ C$
$T_R = 175^\circ C$
$C = 59.8$ gm./Kgm.

4. The temperature of coefficient of reactivity at constant density, averaged from $T = 250^\circ C$ to $T = 260^\circ C$:

$$\left(\frac{\partial K}{\partial T}\right)_\rho = -5.3 \times 10^{-5}\ {}^\circ C^{-1}$$

$T_R = 175^\circ C$
$C = 59.8$ gm./Kgm.

5. The prompt generation time:

$$\tau = (4.97 \pm .31) \times 10^{-5} \text{ sec.}$$

$T = 230^\circ C$
$T_R = 164^\circ C$
$C = 54.2$ gm./Kgm.

6. The amount of reactivity controlled by reflector: (Reflector dump at operating temperature)

$$\frac{\Delta K}{K} = (19.3 \pm 2.5)\%$$

$T = 230^\circ C$
$T_R = 164^\circ C$
$C = 54.2$ gm/Kgm.

7. The amount of reactivity controlled by Control Plates:
(From CF 51-10-64)

$\Delta K = 1.31\%$ per plate

$T = 250^{\circ}C$

$T_R = 175^{\circ}C$

$C = 52.9$ gm./Kgm.

APPENDIX F

Stainless Steel Welding Specifications

A report by S. E. Beall dated July 23, 1951 covers the welding, inspection, and testing procedures employed in fabricating the HRE fuel system. The goal of these procedures is to provide welds with chemical and physical characteristics as nearly as possible like the type 347 parent metal.

The following material has been extracted from the aforementioned report. Only the scope and references are given here.

Procedure Specification for Heliarc Welding of A.S.T.M. 347 Stainless Steel Pipe and Fittings for Fabrication of the Homogeneous Reactor Experiment (HRE Revision of K-25 Spec. ESP-4.3-26)

SCOPE:

1. This specification covers the procedure for welding of A.S.T.M. type 347 stainless steel pipes and fittings for high corrosion applications, using the Heliarc (inert-gas-shielded arc) process for pipe sizes as follows:

   Schedule 40 1/2" through 3"
   Schedule 80 1/4" through 2"

   or stainless steel components having a wall thickness of 0.109" through 0.436".

2. All welding performed by this procedure shall be done by welders qualified in accordance with Operator's Qualification Test Specification ESP-4.4-26. If the operator has not welded in accordance with this procedure specification during the preceding 45 day period he shall be required to pass tests in the 2G and 5G positions on pipe in sizes similar to that being used in construction before he will be eligible to perform work in accordance with this procedure.

REFERENCES:

C&CCD-UC&CC Engineering Specification ESP-4.4-26.
C&CCD-UC&CC Engineering Standard ES-4.3-26.
A.S.T.M. A-213 and A.S.T.M. A-182
A.S.M.E. Boiler Code.

Operator's Qualification Test for Heliarc Welding of A.S.T.M. 347 Stainless Steel Pipe and Fittings for Fabrication of the Homogeneous Reactor Experiment (HRE Revision of K-25 Spec. ESP-4.4-26)

SCOPE:

This specification covers the qualification of operators for approval to Heliarc (Inert-Gas Shield Arc) weld A.S.T.M. 347 stainless steel pipe or tubing of a maximum wall thickness of 0.436" in accordance with ESP-4.3-26.

REFERENCE:

C&CCD-UC&CC Engineering Specification ESP-4.4-26.
C&CCD-UC&CC Engineering Standard ES-4.3-26.
A.S.T.M. A-213

Outline of Testing Program for Fabrication of the Piping and Equipment Pieces for the Fuel System of the Homogeneous Reactor Experiment

I. Analysis of Welding Rod, Pipe, and Fittings

II. Inspection of Welding Process

III. Non-destructive Testing of Finished Welds

IV. Quality Control Samples

APPENDIX G

HRE Building and Site Plan

The HRE site is adequately described in section 1.5 of Chapter 1 of this report.

A set of specifications for the 7500 building were issued by the ORNL Engineering Department, "Specifications For the Construction of Experimental Building No. 7500" and "Water and Electric Power Supply OCRA Area" dated July 17, 1950. These specifications are complete and cover every phase of construction regarding the 7500 building proper and its facilities. Three addenda have been issued since the specifications were written; the latest dated August 3, 1950; the the Invitation Number of the specifications is 40151-1A.

APPENDIX: H
Control Valve Schedule

Valve Line #	Valve No.	cc/day Valve Leakage	Body Connection and Size	Valve Body	Operator	Trim Material and Size	Trim Shape	Flowing Medium	Control Inst. No.	Manual Control Station	Location Moore Station	Position Indicator	Valve Fails	Location of Valve/ Shield	Location on Flow Sheet
105	105		Welded 1/2	MH	MH	1/8 Stellite	= %	Soup	& Sol	On Inst.	-	Yes	O	in	Lower left cent
106	106		Welded 1/2	FS	Fox	1/2 Stellite	on/off	Soup	ORC & Sol	Moore	Panel	Yes	O	in	Lower left cent
113	113A	.0025	Welded 1/2	FS	Fox	1/2 St to St	on/off	Soup	-	Moore	Panel*	Yes	C	in	Lower left cent
113	113B		Welded 1/2	FS	Fox	1/2 347 to St	on/off	Soup	-	Moore	Panel*	Yes	C	Out	Lower left cent
114	114		Welded 1/2	FS	Fox	1/2 347 to/or St	on/off	H_2O	-	Moore	Console	Yes	O	in	Lower left cent
120	120A	.3	Welded 1/2	FS	Fox	1/2 347 to St	on/off	Decont. Waste	-	Moore	Panel*	Yes	C	Out	Lower left cent
120	120B		Welded 1/2	FS	Fox	1/2 St to St	on/off	Decont. Waste	-	Moore	Panel*	Yes	C	Out	Lower left cent
125	125		Welded 1/2	FS	Fox	Special	Special	Gas & Steam	-	Moore	Console	Yes	C	in	Upper left cent
126	126		Welded 1/2	FS	Fox	1/2 347 to/or Stellite	on/off	H_2O	-	Moore	Console	Yes	O	in	Lower left cent
131	131		Welded 1/2	FS	Fox	1/2 347 to Stellite	on/off	Gas & Acid	-	Moore	Panel	Yes	C	in	Upper right cent
132	132		Welded 1/2	FS	Fox	1/2 347 to/or Stellite	on/off	Soup Gas	-	Moore	Panel*	Yes	C	Out	Lower left cent
136	136		Welded 1/2	FS	Fox	1/2 347 to/or Stellite	on/off	Gas	-	Moore	Panel	Yes	O	in	Upper left
137	137		Welded 1/2	FS	Fox	1/2 347 to/or Stellite	on/off	Gas	-	Moore	Panel	Yes	O	in	Upper left

Valve Line #	Valve No.	cc/day Valve Leakage	Body Connection and Size	Valve Body	Operator	Trim Material and Size	Trim Shape	Flowin Medium	Control	Manual Control Station	Location Moore Station	Position Indicator	Valve Fails	Location of Valve/ Shield	Location on Flow Sheet
139	139		Welded 1/2	FS	Fox	1/2 347 to/or Stellite	on/off	Gas		Moore	Console	Yes	C	in	Lower left cent
150	150		Welded 2	MH	MH	2 Stellite	on/off	D_2O	-	Moore & Sol	Panel	Yes	O	in	Lower left
155	155		Welded 1/2	MH	MH	1/8 Stellite	= %	D_2O	12	on inst	-	Yes	O	in	Lower left cent
159	159	1	Welded 1/2	FS	Special	1/2 347 to 410	on/off	D_2O	-	Moore	Panel	Yes	C	in	Lower left
167	167		Screw 1/8	FS	MH	1/16 Stainless	Needle	D_2O Gas	-	Moore	Panel	No	O	in	Middle left
168	168		Screw 1/8	FS	MH	1/16 Stainless	Needle	D_2O Gas	-	Moore	Panel	No	O	in	Middle left
267	267A		Screw 1/2	MN 107	MN	1/16 Stainless	Needle	He	See 270	See 270	-	No	O	Out	Upper left
267	267B		Screw 1/2	MN 108	MN	1/16 Stainless	Needle	He	-	See 150	-	No	C	Out	Upper left
270	270		Welded 1/2	MH	MH	1/8 Stainless to Stellite	= %	He	10	on inst	-	Yes	C	in	Lower left
309	309	600#	Screw 1"	CS	MH	Stainless	= %	H_2O	23 & Sol 8 - air	on inst	-	Yes	C	Out	Upper right
310	310	600#	Screw 1-1/4"	CS	MH	1-1/4 Stainless	= %	H_2O	13	on inst	-	Yes	O	Out	Upper right
313	313	600#	Screw 1"	CS	MH	1/8 Stellite	Parabolic	H_2O	13	on inst	-	No	C	Out	Upper right
316	316A	600#	Flanged 4	CS	HD	4" Stellite	on/off	Steam	23	2 Moores & Sol	Console	Yes	C	Out	Upper right
316	316B	400#	Flanged 4"	CS	Leslie	4" Stellite	= %	Steam				No	C	Out	Upper right
317	317	600#	Screw 1-1/2"	MN	MN	1-1/4" S.S.	V-Port	Steam		Moore & Sol		Yes	C	Out	

Valve Line #	Valve No.	cc/day Valve Leakage	Body Connection and Size	Valve Body	Operator	Trim Material and Size	Trim Shape	Flowing Medium	Control Inst. No.	Manual Control Station	Location Moore Station	Position Indicator	Valve Fails	Location of Valve/ Shield	Location on Flow Sheet
321	321	600#	Screw 3/4"	FS	MN	1/4" S.S.	= %	H_2O	-	Moore & Sol	Panel	Yes	C	in	Upper right cent
323	323	600#	Flanged 2"	CS	Leslie	2" Stellite	= %	Steam	-	Moore	Console	Yes	C	Out	Upper right
324	324	300#	Flanged 1-1/2"	CS	Climax	1-1/2" S.S.	= %	Steam	-	Moore	Console	Yes	C	Out	Upper right
330	330	600#	Flanged 1"	CS	Leslie	5/8" Stellite	= %	Steam	-	See 323	See 323	Yes	C	Out	Upper right
347	347		Screw	MN	MN	1/2 Stainless	= %	Steam	-	See 316 B	See 316 B	No	C	Out	Lower right
407	407		Screw 3	MH	MH	Butterfly		H_2O				Yes	O	Out	Upper left
438	438		Screw	MN 37's	MN	Stainless	V-port	H_2O	6	on inst	-	No	O	Out	Upper right cent
440	440		Screw 1/2 or 3/4	MN 37's	MN	Stainless	V-port	H_2O	79	on inst	-	No	O	Out	Upper right cent
507	507		Screw	MN 37's	MN	Stainless	V-port	H_2O	9	on inst	-	No	O	Out	Upper right cent
712	712A			MN		S.S.		O_2		Moore & Sol	Panel	Yes	C	in	
712	712B			MN		Special	Special	O_2		FRCA - 88 & Sol	on inst	Yes	C	in	

SECRET
SECURITY INFORMATION

APPENDIX J

LIST OF HRE REPORTS AND MEMORANDUMS

TABLE OF CONTENTS

1.0	References on HRE Reports	375
2.0	ORNL Reports on the HRE	375
3.0	Minutes of HRP Meetings	376
4.0	HRE Reports and Memorandums	378
4.1	Physics	378
4.11	General Calculations	379
4.12	Control System	379
4.13	Criticality	381
4.14	Shielding	382
4.15	Health Physics	382
4.2	Chemistry	383
4.21	Reactor Fluids	383
4.22	Solutions	383
4.23	Corrosion	385
4.3	Engineering	387
4.31	Reactor Core	388
4.32	Reflector Vessel	388
4.33	Main Heat Exchanger	389
4.34	Miscellaneous Equipment	390
4.35	Gas Problem	391
4.36	Pumps	393
4.37	Induced Activity	395
4.38	Power System	396
4.39	General Engineering	397

RESTRICTED DATA
This doc[illegible] contains restricted data as defined in the Atomic Energy [illegible] transmittal or the disclosure of its contents [illegible] under to an unauthorized person is prohibited.

1.0 References on HRE Reports

Date	Number	From	To	Subject
1-27-50	50-1-134	-	-	List of Homogeneous Pile Reports
2-1-50	50-2-1	NTBray	-	List of Minutes of Homogeneous Reactor Committee Meetings and Related Subjects
6-20-51	TID-3007	FECroxton	-	Homogeneous and Fluid Fuel Reactors - A List of References on the Subject
9-5-51	51-9-7	WEThompson	Distribution	Homogeneous Reactor Reading File

2.0 ORNL Reports on the HRE

12-28-49	ORNL-527			Technical Division Quarterly Report - Homogeneous Reactor Preliminary Process Design Report
4-21-50	ORNL-630			Homogeneous Reactor Experiment - Report for the Quarter Ending February 28, 1950
6-20-50	ORNL-730			Homogeneous Reactor Experiment Feasibility Report
6-20-50	ORNL-731			A Report on the Safety Aspects of the Homogeneous Reactor Experiment
10-24-50	ORNL-826			Homogeneous Reactor Experiment Quarterly Progress Report for Period Ending August 31, 1950
1-30-51	ORNL-925			Homogeneous Reactor Experiment Quarterly Progress Report for Period Ending November 30, 1950
5-18-51	ORNL-990			Homogeneous Reactor Experiment Quarterly Progress Report for Period Ending February 28, 1951

RESTRICTED DATA
This document contains restricted data as defined in the Atomic Energy Act of 1954. Its transmittal or the disclosure of its contents in any manner to an unauthorized person is prohibited.

SECRET
SECURITY INFORMATION

2.0 ORNL Reports on the HRE (Continued)

Date	Number	From	To	Subject
9-24-51	ORNL-1069			Physical Behavior of the H_2-O_2-H_2O System Under Pressure
10-10-51	ORNL-1057			Homogeneous Reactor Experiment Quarterly Progress Report for Period Ending May 15, 1951
1-9-52	ORNL-1094			A Manual of HRE Control and Instrumentation
12-27-51	ORNL-1121			Homogeneous Reactor Project Quarterly Progress Report for Period Ending August 15, 1951
3-12-52	ORNL-1221			Homogeneous Reactor Project Quarterly Progress Report for Period Ending November 15, 1951

3.0 Minutes of HRP Meetings

All minutes listed below are from W. E. Thomposon to Memo, and are entitled "Minutes of Homogeneous Reactor Committee Meeting."

Date	CF Number	Date	CF Number	Date	CF Number
7-18-49	49-7-153	11-22-49	49-11-225	10-26-50	50-10-134
7-21-49	49-7-190	12-8-49	49-12-32	11-9-50	50-11-35
8-2-49	49-8-29	12-27-49	49-12-114	1-4-51	51-1-17
8-10-49	49-8-122	1-5-50	50-1-22	1-11-51	51-1-59
8-16-49	49-8-172	1-31-50	50-1-169	2-8-51	51-2-45
8-23-49	49-8-242	2-24-50	50-2-127	2-13-51	51-2-66
8-25-49	49-8-243	3-23-50	50-3-118	2-22-51	51-2-123
8-29-49	49-8-256	4-12-50	50-4-53	3-1-51	51-3-5
8-30-49	49-8-266	4-19-50	50-4-97	3-29-51	51-3-116
8-30-49	49-8-284	5-3-50	50-5-90	4-12-51	51-4-99
9-1-49	49-9-19	5-24-50	50-5-148	4-5-51	51-4-31
9-2-49	49-9-46	5-31-50	50-5-166	4-26-51	51-4-127
9-8-49	49-9-88	6-14-50	60-6-101	5-3-51	51-5-44
9-28-49	49-9-211	8-30-50	50-8-19	5-10-51	51-5-68
9-29-49	49-10-27	8-24-50	50-8-94	5-17-51	51-5-197
10-13-49	49-10-101	9-21-50	50-9-114	5-31-51	51-5-196
10-18-49	49-1-130	10-5-50	50-10-29		
11-9-49	49-11-96	10-12-50	50-10-62		

3.0 Minutes of HRP Meetings (Continued)

Date	Number	From	To	Subject
6-7-51	51-6-61	WEThompson	Memo	Minutes of HR Steering Committee Meeting
6-19-51	51-6-86	WEThompson	Memo	Minutes of HR Group Leaders Meeting
6-21-51	51-6-120	WEThompson	Memo	Notes on HR Information Meeting
7-5-51	51-7-47	WEThompson	Memo	Minutes of Special HRE Meeting
7-12-51	51-7-60	WEThompson	Memo	Minutes of HR Steering Committee Meeting
7-19-51	51-7-117	WEThompson	Memo	Minutes of HR Group Leaders Meeting
8-9-51	51-8-63	WEThompson	Memo	Minutes of HR Steering Committee Meeting
8-16-51	51-8-170	WEThompson	Memo	Minutes of HR Group Leaders Meeting
8-16-51	51-8-171	WEThompson	Memo	Minutes of Meeting on Boiling Reactors
8-20-51	51-8-257	WEThompson	Memo	Minutes of Meeting on Boiling Reactors
9-13-51	51-9-79	WEThompson	Memo	Minutes of HRP Information Meeting
9-13-51	51-9-80	WEThompson	Memo	Minutes of Special Meeting on Boiling Reactors
9-20-51	51-9-104	WEThompson	Memo	Minutes of HR Steering Committee Meeting
9-27-51	51-9-168	WEThompson	Memo	Minutes of HR Group Leaders Meeting
9-27-51	51-9-169	WEThompson	Memo	Minutes of Boiling Reactors Meeting
10-11-51	51-10-95	WEThompson	Memo	Minutes of the HRP Group Leaders Meeting

3.0 Minutes of HRP Meetings (Continued)

Date	Number	From	To	Subject
11-12-51	51-11-77	WEThompson	Memo	Minutes of HRP Group Leaders Meeting, November 8, 1951
12-11-51	51-12-64	WEThompson	Memo	Minutes of HRP Group Leaders Meeting, December 6, 1951
12-27-51	51-12-152	WEThompson	Memo	Minutes of HRP Group Leaders Meeting, December 20, 1951
1-15-52	52-1-99	WEThompson	Memo	Minutes of HRP Group Leaders Meeting, January 10, 1952
2-11-52	52-2-82	WEThompson	Memo	Minutes of HRP Group Leaders Meeting
3-7-52	52-3-43	WEThompson	Memo	Minutes of HRP Group Leaders Meeting, March 6, 1952
3-24-52	52-3-184	WEThompson	Memo	Notes on HRP Information Meeting, March 20, 1952
4-9-52	52-4-50	WEThompson	Memo	Minutes of HRP Group Leaders Meeting, May 8, 1952
5-12-52	52-5-93	WEThompson	Memo	Minutes of HRP Group Leaders Meeting, June 5, 1952

4.0 HRE Reports and Memorandums

4.1 Physics

4.11 General Calculations

3-24-50		CEWinters	File	Calculations by J. Stein
10-2-50		JMStein		Calculation Sheet for Criticality of the Two-Region Plutonium Producer
10-31-51	51-10-196	TAWelton	JASwartout	Use of Light Water Reflector for the HRE
11-19-51	51-11-94	HTWilliams	JASwartout	Nuclear Constants of HRE

4.11 General Calculations (Continued)

Date	Number	From	To	Subject
12-4-51	51-12-1	REAven	Distribution	Delayed Neutrons and Their Reactivity Contribution to the Homogeneous Reactor
12-19-51	51-12-122	HTWilliams	Distribution	Photoneutrons in the HRE
1-15-52	Erratum to 51-12-122	HTWilliams	Distribution	Photoneutrons in the HRE

4.12 Control System

3-14-50	Memo	CBGraham	JStein	Notes on Controls for Homogeneous Reactor
4-18-50	50-4-84	ISpiewak	CBGraham	HRE Fluctuations Caused by Feed of Saturated Uranyl Sulfate
2-15-51		GHClewett	File	Explosion Limits in the D_2O Reflector
7-6-51		CGGoss		Progress Report on the Homogeneous Reactor Simulator
7-25-51	51-7-114	REAven	JASwartout	Calculation of Fluid Friction Coefficients in the Pressurizer Tube and Their Effects on the Reactivity of the Core Materials
8-6-51	51-8-31	TAWelton	CEWinters	Pressurizer Design
8-7-51	51-8-53	TAWelton	CEWinters	Oscillation of Fluid Level in Soup Dump Line
8-19-51	Memo	JStein	File	HRE Simulator
9-13-51		LRQuarles	CEWinters	Control Rods
9-24-51		LRQuarles	TAWelton	Control Rod Calculations
9-25-51	51-9-131	PMWood	JASwartout	Effectiveness of HRE Control Plates with Heavy Water Reflector 93.4% Enriched Fuel Material

4.12 Control System (Continued)

Date	Number	From	To	Subject
9-26-51	51-9-136	TAWelton	CEWinters	HRE Control
10-2-51	51-10-21	GTTrammell REAven	Distribution	Damping Coefficients in the Modified Pressurizer Tube
10-10-51	51-10-64	PMWood	JASwartout	Effectiveness of HRE Control Plates with Light Water Reflector, 93.4% Enriched Fuel Material
10-16-51	51-10-107	REAven	Distribution	Damping Coefficients in the Dump Line to the Reactor Vessel
10-18-51	Memo	TAWelton	CEWinters	HRE Simulator
11-12-51	51-11-92	SHanauer	WHJordan	Pile Simulator Study of Neutron Flux in HRE Following a Decrease in Coolant Flow
11-19-51	51-11-98	PMWood	SEBeall	Heat Generation in the HRE Control Plates
1-5-52	52-1-24	TAWelton	JASwartout	Overall Stability of the HRE
2-11-52		ECMiller	SEBeall	Control Plates
2-20-52		WMBreazeale	SEBeall WBrand	HRE Controls
2-29-52		WMBreazeale	CEWinters	Concentration Indicator and Control
5-1-52		CEWinters	WMBreazeale	Control Rods
5-26-52		WMBreazeale	CEWinters	Possible Removal of Shim Safety Rods in the HRE
5-26-52		CEWinters	JASwartout	Removal of Control Rod Drives and Control Plates

4.13 Criticality

Date	Number	From	To	Subject
6-2-50	50-6-11	JMStein	Memo	Criticality of Mixed Core and Reflector in the HRE
11-30-50	50-11-41	LCNoderer NFLansing	File	Critical Calculations for Homogeneous Low Enrichment UO_2SO_4-D_2O Systems
1-30-51	51-1-97	LRQuarles	CEWinters	Experimental Program for the HRE
4-25-51	51-4-109	JASwartout	ADCallihan	Criticality Evaluation of HRE Dump Tank System
6-1-51	51-6-1	TAWelton	JASwartout	Criticality of Soup Dump Tanks
6-18-51	51-6-67	DCallihan	JASwartout	Nuclear Safety of HRE Fuel Dump Tank System
6-27-51	51-6-116	TAWelton	JASwartout	Critical Experiments for HRE
7-9-51		JASwartout	TAWelton	Critical Experiments for the HRE
7-19-51	Y-A2-64	ADCallihan JWMorfitt	AMWeinberg	Critical Experiments for HRE
7-23-51	51-7-106	LHThacker	JASwartout	Criticality of HRE with Low Enrichment, High Concentration UO_2SO_4-Water Solution
7-31-51	51-7-167	TAWelton	JASwartout	Meeting to Discuss Critical Experiments for HRE
8-8-51	51-8-51	LHThacker HTWilliams	JASwartout	Criticality of HRE with Light Water Reflector
8-21-51	Supplement to 51-8-51	LHThacker HTWilliams	JASwartout	Criticality of HRE with Light Water Reflector
11-28-51	51-11-149	SVisner	SHBeall, et al	Experimental Physics Program for the HRE
12-26-51	51-12-144	WEThompson	Memo	Notes on the Critical Experiment Program Review Meeting 12-13-51

4.14 Shielding

Date	Number	From	To	Subject
4-12-50		ISpiewak	CBGraham	Radioactive Argon Formation in HRE Shield
9-25-50	50-9-139	HEnlund	JMStein	HRE Slow Flux in the Shield
10-30-50	50-10-135	CLSegaser	HRE File	HRE Shielding Design
12-27-50	50-12-104	CLSegaser	HRE File	HRE Shielding Design Report Supplement
1-10-51	Memo	ASKitzes	DTJones	Concrete Block for HRE

4.15 Health Physics

2-13-50	50-2-65	WHRay	KZMorgan	Accidental Decrease Radioactivity Hazards Relative to Location of Homogeneous Pile
2-13-50	50-2-68	THJBurnett	WHRay	Fission Products Dispersal, Partial Theoretical Consequence
3-15-50	50-3-101	THJBurnett	File	Fission Products Dispersal Estimated Hydrological Hazards
4-18-50		THJBurnett	File	Correction and Supplement to ORNL CF No. 30-3-101, 3-15-50
4-18-50	50-4-83	CBGraham	CEWinters	Analysis of HRE Hazard as a Result of Over Concentration of Soup System
11-16-51		SEBeall	7500 Area Personnel	HRE Operating Hazards

4.2 Chemistry

4.21 Reactor Fluids

Date	Number	From	To	Subject
11-23-49	ARCD-2871	FTBard		Heavy Water (Unclassified)
	50-11-1	CHSecoy	Distribution	A Survey of the Homogeneous Reactor Research Program in Chemistry
12-15-50	50-12-58	JLEnglish	RNLyon	Effect of Hydrogen Removal of Uranyl Sulfate Stability
5-9-51	51-5-46	TCRunion LEMorse	FLSteahly	Observations on the Stability of Uranyl Sulfate Solutions
6-12-51	Memo	JDMaloney	HRE File	Estimate of Soup Requirements for HRE
6-15-51	Memo	JDMaloney	HRE File	Estimate of D_2O Requirements for HRE
7-31-51	51-7-177	CHSecoy	JASwartout	Conference on Analytical Samplingand Procedures for HRE, July 18, 1951
10-3-51		JASwartout	HCSavage	Uranyl Sulfate for HRE Shake-down Runs
10-9-51	51-10-163	SEBeall	CEWinters	Request for 1.5 kg U^{235} for HRE

4.22 Solutions

10-4-43	LAMS-18	RFChristy		Critical Mass of U^{235} in Water Solution with Water Reflector
7-18-49	49-7-161	CHSecoy	CLSegaser	Density of UO_2SO_4 Solutions
3-24-50	50-3-131	CEGraham	CEWinters	Concentration Indications for Homogeneous Reactor
6-13-50	50-6-107	CKLarson	AHHolland,Jr.	Experiments at Chalk River

4.22 Solutions (Continued)

Date	Number	From	To	Subject
8-13-51	Memo	WLMarshall MHLietzke	Distribution	Production Procedure for Chemically Pure Uranyl Sulfate
8-21-51		MHLietzke HWWright WLMarshall		Uranyl Sulfate Production - Acidities, Refractive Indices, and Densities of Uranyl Sulfate Solutions
8-22-51	51-8-38	MHHaring	FRWard	Physical Properties of Uranium Solutions
11-23-51	51-11-127	WDDavenport	CHSecoy	Recommendations Concerning the Use of a "Princo Densitrol" Instrument for Continuous Indication of the Specific Gravity of HRE Solutions
1-15-52	52-1-93	WLMarshall		Density-Weight Percent Molarity Conversion Equations for Uranyl Sulfate-Water Solutions at 250° C and Between 100 - 300° C
1-22-52		WMBreazeale	GGQuarles	Concentration of a Uranium Salt Dissolved in Water
1-23-52	52-1-137	CHSecoy	JASwartout	Required Cu Concentration for Steady-State Reactor Operation as a Function of Temperature, Flux, and Pressure
1-28-52	52-1-124	RVanWinkle	File	Some Physical Properties of UO_2SO_4-D_2O Solutions
2-1-52		WMBreazeale	CDSusano	Req. for Absorption Spectrum of Uranyl Sulfate

4.23 Corrosion

Date	Number	From	To	Subject
6-15-49		ECMiller	CEWinters	Corrosion Tests for the Homogeneous Reactor
7-1-49		JLEnglish	CEWinters	Autoclave Project Request for Homogeneous Reactor Corrosion Tests
9-13-49	Y-FO-1	JLEnglish	RNLyon	Tolerable Thickness of Various Materials for the Homogeneous Reactor Tank Wall
9-13-49	49-9-117	FKerze	JHFrye, Jr.	Zirconium Tank for Homogeneous Reactor
3-30-50		JLEnglish	RNLyon	Homogeneous Reactor Corrosion Program
6-28-50	50-6-194	JLEnglish	RNLyon	Status Report on Chemical Pretreatment for Homogeneous Reactor Materials
4-4-51	51-4-20	JLEnglish	RNLyon	Corrosion Newsletter No. 1
4-30-51		SEBeall	CHSecoy	Cleaning Process for HRE Stainless Steels Before Welding
5-3-51	51-5-37	JLEnglish	RNLyon	Corrosion Newsletter No. 2
5-21-51	51-5-127	CHSecoy	Distribution	Pretreatment of Stainless Steels

4.23 Corrosion (Continued)

Date	Number	From	To	Subject
7-24-51	51-7-130	HCUrey	Memo	Conference on Corrosion
8-2-51		CEWinters	JASwartout	A Note on Means for Obtaining Variable Velocities for Corrosion and HRE Experiments
8-3-51		CEWinters	EGBohlmann	Notes on Effect of Fluid Velocity Upon Corrosion
8-6-51		CEWinters	EGBohlmann	Note on Effect of Variables on "Hydraulic Drag"
8-10-51		GHCartledge	JASwartout	Comments on Corrosion Problem In HRE
8-15-51		EGBohlmann	JASwartout	Comments on Your Memo of 7-18-51 re Status of Current Questions about HRE
9-18-51		ECMiller	CEWinters	Stress Relief of 347 Weldments
10-9-51	51-10-129	RVanWinkle	EGBohlmann	Solution Evaporation Test
11-9-51		EGBohlmann	Distribution	Start-up Procedure for HRE Mock-up
11-11-51	51-11-106	CHSecoy	SEBeall	Decontamination and Film Removal
11-14-51		ECMiller	EGBohlmann	Corrosion Testing Involving Metallurgical Factors
11-27-51		SEBeall	CHSecoy	Decontamination and Film Removal
11-30-51		CHSecoy	SEBeall EGBohlmann	Correction to Memo CF 51-11-106 "Decontamination and Film Removal"
12-18-51		EGBohlmann	SEBeall	Start-up on Soup in HRE
12-19-51		FJLambert	JHGross	Corrosion Test Pins
1-23-52		TEWillmarth FDMcNeer	EGBohlmann	A Microscopic Study of Oxide Films Formed on Chrome-Iron Containing Approximately 1.25% Copper Exposed to 0.17M Uranyl Sulfate Solution at 250° C for 12 Weeks

4.23 Corrosion (Continued)

Date	Number	From	To	Subject
1-30-52		ECMiller	Distribution	Metallographic Examination of Plug from all Welded Stainless Steel Letdown Valve
4-1-52		FCZapp	EGBohlmann	Approximate Area of Stainless Steel in Contact with High Pressure Soup

4.3 Engineering

4.31 Reactor Core

11-3-49	49-11-48	CLSegaser	CEWinters	Alternate Design of Homogeneous Pile Reactor Chamber
11-3-49		CLSegaser	CBGraham	Stress Analysis of Proposed Mock-up Core Tank for the Homogeneous Pile
3-17-50		CLSegaser	CEWinters	Composite Zirconium and Stainless Steel Core Tank for the Homogeneous Reactor Pilot Plant
7-5-50		WHWinsbro	DTJones	Calculation of Heat Transfer Rate from Core to Reflector in Homogeneous Reactor
8-15-50		CLSegaser	WRGall	Tangential Thermal Stresses in Core Tank
10-2-50		FCZapp	WRGall	Calculation of Heat Transfer Rate from Core to Reflector in the HRE
4-23-51	Memo	GHClewett	Distribution	Explosions in the Core of the HRE
6-29-51	KT-107	JEBigelow, et al	THPigford	The Action of Oxygen on Activated Charcoal
7-3-51	51-7-3	PCZmola TAWelton	JASwartout	Effects of Possible Chemical Explosion in the Core Tank of the HRE

4.31 Reactor Core (Continued)

Date	Number	From	To	Subject
7-19-51	51-7-88	CEWinters	GFWislicenus	Sphere Hydrodynamics Problem
7-19-51	51-7-107	LCooper	WRGall	Removal of Heat from Core After Shutdown
8-23-51	51-8-245	CLSegaser	HRE File	Localized Stresses in HRE Core Tank Shell at Nozzle Connections
8-28-51		FCZapp	RBBriggs	Stability of HRE Core Tank Under Dumping Conditions
8-29-51		CEWinters	LRQuarles	Comments on Memo by FCZapp to RBBriggs, August 28, 1951
8-29-51	51-8-232	ISpiewak JOBradfute	CBGraham	Use of Baffles in the HRE Core Tank
9-6-51	51-9-22	CBGraham	CEWinters	HRE Core Tank
11-15-51		THThomas	SEBeall	Hydrostatic Pressure Test of Core Tank and Pressurizer Assembly, November 13, 1951
1-4-52	ORNL-1171	FNPeebles		The Motion of Gas Bubbles in the HRE Reactor Core
1-21-52		HFPoppendiek	CEWinters	Remarks on U.T. Report, "Nature of Liquid Flow Within a Spherical Container"
2-6-52	ORNL-1124	DHFax SCTraugott GFWislicenus		Analysis of Flow Through a Sphere

4.32 Reflector Vessel

11-15-49	49-11-152	CLSegaser	CEWinters	Pressure Shell and Closure Design for the Homogeneous Reactor

4.32 Reflector Vessel (Continued)

Date	Number	From	To	Subject
12-9-49	49-12-48	CLSegaser	CEWinters	Discharge Times of Homogeneous Reactor Pilot Model Reflector Flowing Through 2" Pipe from Pressure Tank
1-11-50	50-1-70	CLSegaser	CEWinters	Tentative Specifications for the Homogeneous Reactor Pilot Plant Reflector Pressure Vessel
3-28-50		CLSegaser	CEWinters	Confirming Memo on Selection of Gasket for the Top Closure of the Homogeneous Pilot Reactor
4-19-50	50-4-115	HCSavage	CBGraham	Thermal Stresses in HRE Reflector Tank
6-8-51		GHClewett	File	Explosion Limits in the D_2O Reflector
7-23-51	51-7-105	REAven PCBwola	JASwartout	Effects of Possible Chemical Explosion in the Reflector Tank of the HRE

4.33 Main Heat Exchanger

8-23-49		CLSegaser	JALane	Heat Exchanger Analysis for the Homogeneous Power Reactor Pilot Plant - Study I
7-19-50		AGGrindell	WRGall	Design and Operating Characteristics of Heat Exchanger, HRE
7-16-51		MShaw	SHBeall	Pressure Drop Through Tubes of Soup Heat Exchanger
8-15-51		TRThomas	Distribution	Tube Rupture in Boiler - Item 3
8-16-51	51-8-116	REAven	TAWelton	Heat Transfer Coefficients for the Heat Exchanger

4.33 Main Heat Exchanger (Continued)

Date	Number	From	To	Subject
8-25-51	KT-116	ERRenier, et al	HTTupper	Performance Test of HRE Boiler (EPS-X-141)
8-28-51	Correction to 51-8-116	REAven	TAWelton	Heat Transfer Coefficients for the Heat Exchanger
10-23-51		RWFrench	HRE File	Heat Exchanger (Item 3) Leak Detector

4.34 Miscellaneous Equipment

4-7-50		ISpiewak	CBGraham	Reflector Heat Exchanger
2-7-51		RVanWinkle	CBGraham	Heat Removal Performance of the HRE Flame Recombiner
4-11-51		RVanWinkle	CEWinters	Helium Off-gas Coolers
5-29-51		GHClewett	CEWinters	Recombiner for Reflector System
5-31-51		CBGraham	CEWinters	Oxygen Pressurizer
6-28-51		LRQuarles	CEWinters	Reflector Recombiner
7-23-51		MShaw	SEBeall	Pressure Drop Through D_2O Heat Exchanger
8-20-51		JMSmith DLKatz	Distribution	Catalytic Recombiner
8-27-51		CBGraham, et al	CEWinters	Adequacy of the Steam Space in the Pressurizer
9-11-51		RChapman	HRE File	Design Criteria for Low Pressure D_2O Catalytic Recombiner
10-2-51	51-10-29	LCooper	RBBriggs	Oxygen Absorption and Surge Chamber
10-9-51		CHSecoy	ARBrosi HZeldes	Critical Review of Capacity and Operability of HRE Charcoal Adsorbers

4.34 Miscellaneous Equipment (Continued)

Date	Number	From	To	Subject
10-31-51		RWFrench	HRE File	Sampler for Hi-Pressure Helium Loop
11-6-51		LHThacker	HRE File	Calibration of Outer Soup Dump Tank - Bubbler Level Indicator
11-7-51		RWFrench	HRE File	D_2O Sampler with Provision for Filling or Emptying System
11-7-51		LHThacker	HRE File	Testing of Outer Dump Tank Valve Pit Components and Transfer of Material Through Pit
11-9-51	51-11-59	ISpiewak	SEBeall	Design Data for HRE Charcoal Absorbers
11-15-51		RWFrench	HRE File	Deuterium, Oxygen Recombiner Loop
11-20-51		SEBeall	RWFrench	D_2O Sampler with Provision for Filling or Emptying System
11-24-51		JJHairston PMWood	SEBeall	Entrainment from Soup Evaporator
12-27-51		CLSegaser	RBBriggs	Alternate Safety Plate Design for HRE
1-9-52		CLSegaser	HRE File	Alternate Safety Plate Design

4.35 Gas Problem

4-11-46	LA-548	AGoldstein SKatcoff	-	Sweeping of Radioactive Gases from a Homogeneous Pile
8-5-49	49-8-97	JALane	HR Steering Committee	The Bubble Problem in the Homogeneous Reactor
8-25-49	49-9-114	HEGoeller	File	Production of Gaseous Fission Products in Homogeneous Reactors
2-16-50	50-2-110	JALane	File	Rate of Formation of Bubbles in Liquids - Literature Survey

4.35 Gas Problem (Continued)

Date	Number	From	To	Subject
4-27-50	50-4-148	RHWilson	CBGraham	Literature Survey re Bubble Formation
7-18-50		FNPeebles	CBGraham	Motion of Gas Bubbles in a Liquid Rotating Within a Spherical Container
7-19-50		FNPeebles	CBGraham	Variation in Bulk Density in a Boiling Liquid Due to Vapor Hold-up
9-11-50	50-9-38	WLRoss	CBGraham	Restarting of HRE Soup Pump - Safety Considerations
10-23-50	KT-97	RBakal DLJames	THPigford	Bubble Formation at High Power Densities (EPS-X116)
10-25-50	50-10-133	JOBradfute	CBGraham	Gas Generation in the HRE Pressurizer System
11-15-50	KT-95	WHBowman	THPigford	Bubble Formation in Internally-Heated Aqueous Solutions
1-1-51	Y-706	HMMcLeod, et al	Distribution	Recombination of Stoichiometric Mixtures of Hydrogen and Oxygen in a Flame Recombiner - Feasibility Report
1-25-51		RVanWinkle	HMMcLeod	HRE Recombiner System
3-1-51	Y-731	DWKuhn	Distribution	Explosion Limits in Mixtures of Hydrogen, Oxygen, Steam, and Helium
8-14-51		CDZerby	Distribution	Preliminary Report of Low Pressure Mock-up of the Letdown System
8-24-51	51-8-266	DLKatz	CEWinters	Nucleation and Rate of Bubble Growth in Homogeneous Reactor Experiment
8-30-51	51-8-287	JMSmith DLKatz	CEWinters	Performance of Letdown System of the HRE

4.35 Gas Problem (Continued)

Date	Number	From	To	Subject
9-7-51	51-9-69	LCooper	RBBriggs	Gas Formation in Suction Line to Pulsafeeder
10-17-51	51-10-165	ISpiewak JOBradfute	File	Effect of Density Differences on Flow in the HRE Core
12-6-51		JSCulver	CBGraham	Letdown Valve in the HRE Mock-up
12-10-51	51-12-119	ISpiewak	CBGraham	Preliminary Investigation of Pipe Gas Separators by JIGonzales
		RVanWinkle	HRE File	Testing of a Mock-up of HRE Fuel Off Gas Recombiner System
1-15-52	ORNL-1209	DWKuhn, et al		The Reaction Between Hydrogen and Oxygen by Catalysis and the Thermal Reaction
1-23-52		JARansohoff	SEBeall	Test of High Pressure Gas System

4.36 Pumps

10-4-50	50-10-47	CBGraham	File	Pulsafeeder Pump Connection
10-20-50		HCSavage	File	Westinghouse Pump and High Pressure Recirculating System
10-26-50	50-10-145	JOBradfute	CBGraham	Gas Generation and Radiation Damage in the HRE Circulating Pump
12-20-50	50-12-86	CLSegaser	HRE File	Shielding Requirements for the Pulsafeeder Soup Pump
12-30-50		CBGraham	CEWinters	Status of HRE Circulating Pump
1-15-51	WAPD-BM-54	Westinghouse Electric Corp.		Axial Thrust in Westinghouse Totally Enclosed Centrifugal Pumps, Model 100-A

4.36 Pumps (Continued)

Date	Number	From	To	Subject
7-2-51		CBGraham	WRGall	Pulsafeeder Pump Procurement
7-6-51		WGAtkinson	CBGraham	Data on Pulsafeeder Pump
7-27-51		GFWislicenus	JASwartout	Hydrodynamic and Pump Problems of the HRE
10-24-51		RCauble	HRE File	One Gallon Per Hour Pulsafeeder Purge Pump Installation
10-29-51		HCSavage	SEBeall	Model 100-A Westinghouse Pump for the HRE
11-1-51		HCSavage	SEBeall	Measuring Cylinder for Lapp Pulsafeeder
11-16-51		CWKeller	SEBeall	The Measurement of the Output of the Pulsafeeder Pump
11-17-51	EPS-X-160	CGregory Morganthaler Mann	THPigford	Flow Through Water Lubricated Bearing
12-4-51		CLSegaser	HRE File	Alternate High Pressure Feed Pump for HRE
1-15-52	52-1-103	HCSavage THMauney	SEBeall	GPH Pulsafeeder Pump at 7500 Area
1-22-52		HCSavage	MAPenfield	Repair of Westinghouse Model 100-A Stators
1-29-52		CBGraham	SEBeall	Soup Pulsafeeder Discussion - 1-24-52
2-12-52		CWKeller	SEBeall	Proper Contour of the Machined Faces of the Lapp Pulsafeeder Heads
2-13-52		CWKeller	LWilson	Pulsafeeder Heads
2-13-52		CWKeller	VLeipold	Pulsafeeder Heads
2-25-52		RALorenz DSchwartz	EGBohlmann	Characteristics of the Westinghouse Model 100-A Pump

4.36 Pumps (Continued)

Date	Number	From	To	Subject
4-5-52		JASwartout	CEWinters	HRE Pulsafeeder Operation
4-16-52		CBGraham	JSCulver	Dirt in Pulsafeeder Pump

4.37 Induced Activity

3-31-50		ISpiewak	CBGraham	Radioactive Release to Turbine System from a Split Boiler Tube
6-21-50	50-6-122	JMStein	Memo	Alternate Calculation of Argon Activation in the HRE
12-19-50	50-12-78	CLSegaser	HRE File	Estimate of Radioactivity of Steam in the Power Circuit of the HRE at 1000 kw Power Level
1-3-51	51-1-6	CLSegaser	HRE File	Effect of Fast Neutron Absorption by O^{16} in the Boiler Water on the Induced Activity of Steam in the Power Circuit of the HRE at 1000 kw Power Level
1-12-51		CLSegaser	CEWinters	Estimate of Radiation Dosage on Surfaces of the Turbine-Condenser Hot Well and the 200 Gallon Storage Tank
10-3-51	51-10-33	LCooper	RBBriggs	Activities in D_2O Reflector Vessel
12-7-51		CLSegaser	Memo	Estimation of Induced Radioactivity in HRE Reactor Tank, Top Flange, and Attached Components after Long Irradiation at 1000 kw Power Level

4.38 Power System

Date	Number	From	To	Subject
7-26-50	50-7-173	RVonBerg	CBGraham	HRE Heat Balance
8-30-50		RRobertson	CEWinters	Steam Cycle Conditions for Reactor Operation Above 1000 kw
9-13-50	50-9-93	RCRobertson	File	Study of Steam Power Cycle and Equipment for the Pilot Model Homogeneous Reactor Experiment and Preliminary Study of Steam Power Cycle for a Full Scale Homogeneous Reactor
9-14-50		CEWinters	HRE File	Optimum Steam Temperature
9-15-50		CEWinters	HRE File	Steam Pressure vs. Flows
10-24-50		LRQuarles	HRE File	Power Failure and Emergency Operation of Generator
2-2-51	51-2-15	CLSegaser	HRE File	Study of Steam Power Cycle Equipment Design Limitations on Operation of HRE at "Soup" Temperatures Less Than 250° C
7-9-51		CMWetzel AGGrindell	HRE File	Thermal Stress Analysis of Soup, Reflector, and Steam Pipe Lines
9-29-51	EXP-X-145	JWBarlow, et al	THPigford	Performance Tests on 7500 Building HRE Equipment
10-31-51		CEWinters	THPigford	Tests on Turbine-Generator for Building 7500
12-15-51	EPS-X-165	CGregory, et al	THPigford	Performance Tests on Turbine-Generator for 7500 Building

4.39 General Engineering

Date	Number	From	To	Subject
9-4-44	LA-134	Baker, et al		Water Boiler
12-19-47	LA-1034 Chapt. 4	LDPKing		Critical Assemblies - Water Boilers
7-15-49	49-7-135	AMWeinberg	Memo	Outline of Program for Design of Pilot Model of Homogeneous Power Reactor
8-1-49	49-8-37	CEWinters	HR Steering Committee	Teletype Information from LDPKing, Los Alamos
11-3-49	49-11-51	ISpiewak	CEWinters	Design Data for Homogeneous Reactor
11-30-49	49-11-329	CLSegaser	CEWinters	Homogeneous Reactor Pilot Plant Design Notes
12-9-49	49-12-36	CNRucker	AMHolland	Proposed Homogeneous Pilot Model Reactor
12-15-49		CLSegaser	WRPike	Development of Diaphragm Packless Valve for HRE
12-19-49	49-12-82	CLSegaser	CEWinters	Homogeneous Reactor Pilot Plant Design Study
3-8-50		CAMossman	CBGraham	Valve Sizes
6-16-50		ISpiewak	CBGraham	Use of Charcoal in Off-Gas Disposal
9-14-50	50-9-74	FRWard	AMWeinberg	Transmittal of Comment Concerning the HRE
10-4-50	50-10-8	CEWinters	FRWard	Letter Concerning HRE Comments
10-17-50	50-10-152	FTMiles, et al	Memo	Comments on ORNL Homogeneous Reactor Experiment
10-17-50	50-10-151	FRWard	AMWeinberg	Transmittal of Comments by Winsche, Allen, and Miles on HRE
11-14-50	50-11-69	AMWeinberg	FRWard	Remarks on Comments by Members of Brookhaven Staff Concerning HRE

4.39 General Engineering (Continued)

Date	Number	From	To	Subject
3-5-51	51-3-6	AMWeinberg	HRE Steering Committee	Suggestions for Initial Experimentation in the HRE
3-6-51		RVanWinkle	CEWinters	Discussion of an Improved Recombiner Flowsheet
4-25-51		JASwartout	HR Steering Committee	Questions About D_2O System
5-1-51	51-5-12	RHChapman	HRE File	Calculations on the Emergency Cooling System
6-29-51	KT-107	Bigelow Belaga Mulvihill	THPigford	The Action of Hydrogen on Activated Charcoal (EPS-X-139)
7-13-51		CBGraham	CEWinters	Increasing Dump Tank Pressure to 15 psig
7-13-51		THMauney	SEBeall	Air-Impact Wrench Bolt Stress Tests on HRE Reflector Vessel 24 in. Flange
7-16-51		SEBeall	WRGall	Comments on HRE Welding
7-18-51		CEWinters	Distribution	Material Abstracted from ANL-4635
7-18-51		JASwartout	CEWinters	Welding of Test Equipment
7-20-51		JASwartout	HRP Steering Committee	Option of Welding Research Council on HRE Welding Procedures
7-20-51		LRQuarles	CEWinters	Reflector Recombiner System
7-23-51		SEBeall	Distribution	Welding and Inspection of 347 in the HRE
8-6-51	51-8-48	RHChapman	HRE File	Supplement to CF 51-5-12
8-13-51		SEBeall	CEWinters	Weekly Summary - HRE Construction
8-17-51		CEWinters	SEBeall WRGall CBGraham	Comments re Reports of Design Review Committee

4.39 General Engineering

Date	Number	From	To	Subject
8-21-51		JASwartout	SEBeall LRQuarles TAWelton	Start-up and Operating Procedures for HRE
8-22-51		JASwartout	Design Review Group	Status of HRE Design Review
8-22-51		LRQuarles	CEWinters	Comments re Reports of Design Review Committee
8-28-51		LRQuarles	SEBeall	Reflector System Tests
9-6-51		ECMiller	CEWinters	Machining Welds in the HRE System
9-7-51	51-9-70	LCooper	RBBriggs	HRE Heat Losses During Normal Operation
9-11-51		CEWinters	SEBeall	Machining Welds in the HRE System
9-17-51		RBBriggs	CEWinters	Insulation for HRE
9-20-51		RBBriggs	SEBeall	Changes in Design and Flowsheet for HRE, 9-19-51
9-27-51		JASwartout	CHSecoy TAWelton	Status of Current Questions About HRE
10-1-51		JSCulver	SEBeall	Results of Test of 7500 LDHE on HRE Mock-up
10-2-51		CEWinters	HFStringfield	U^{235} for HRE
10-2-51		LRQuarles	SEBeall	HRE Cooling Time
10-4-51		CWKeller	EGBohlmann	Area Exposed to Soup in the Mock-up
10-5-51	51-10-50	CELarson	NHWoodruff	Enriched Uranium for the HRE Program - Request for Increase in Special Quota Allocation - IC-416
10-9-51		CBGraham	JSCulver	Entrainment During Dump
10-10-51		FCZapp	CLSegaser	Special Bleed-off Valve in Line 125

4.39 General Engineering (Continued)

Date	Number	From	To	Subject
10-10-51		FCZapp	CLSegaser	HRE Rupture Disks
10-10-51		CLSegaser	HRE File	Status of HRE Design
10-15-51		RWFrench	HRE File	Use of D_2O System Vent for Emergency Fill
10-16-51		CLSegaser	HRE File	Status of HRE Design
10-17-51		FCZapp	CLSegaser	HRE Rupture Disk Locations
10-22-51		FCZapp	CLSegaser	Dumping, Purging, and Concentrating in the HRE Soup System
10-22-51		CLSegaser	HRE File	Status of HRE Design
10-25-51		JASwartout	Distribution	Status of Questions Raised by HRE Design Review Group
10-25-51		CLSegaser	HRE File	Status of HRE Design
10-30-51		CEWinters	File	Summary of Meeting Held on October 30, 1951 to Discuss Recombiner Program, Present and Future
10-31-51		CLSegaser	HRE File	Status of HRE Design
11-2-51		JASwartout	CEWinters SEBeall	Reflector System for HRE
11-14-51		JWHill, Jr.	SEBeall	Testing of HRE Reflector System
11-14-51		THThomas	SEBeall	Testing to be Performed on Fuel System Components of the HRE
11-16-51		CLSegaser	HRE File	Status of HRE Design
11-23-51		FCZapp	SEBeall	Corrosion Sample Retainers
1-8-52		CLSegaser	File	Status of HRE Design
1-15-52		DTJones	HRE File	Valves for Leak Detector Systems

4.39 General Engineering (Continued)

Date	Number	From	To	Subject
1-24-52	52-1-152	RBBriggs	CEWinters	Stresses in the HRE Soup Evaporator
2-1-52		CLSegaser	HRE File	Status of HRE Design
2-14-52		CBGraham	RBBriggs	Pre-Design and Development of a Seal
2-15-52		WMBreazeale	GGQuarles	Liquid Level Indicator
2-22-52		CLSegaser	HRE File	Status of HRE Design
4-25-52	52-4-151	WEThompson	Memo	The ORNL Homogeneous Reactor Research and Development Program
4-29-52		CLSegaser	HRE File	Status of HRE Design
5-5-52		JASwartout	CEWinters	Program for HRE
6-2-52	52-6-5	JASwartout	CECenter	Letter re Status of Experimental Program for HRE, Transmitting Sketch of HRE

REACTORS-RESEARCH AND POWER

Standard Distribution	ORNL-1534 Series TA Copy No.
Argonne National Laboratory	1- 11
Armed Forces Special Weapons Project (Sandia)	12
Atomic Energy Commission, Washington	13- 17
Battelle Memorial Institute	18
Brookhaven National Laboratory	19- 21
Bureau of Ships	22
California Research and Development Company	23- 24
Carbide and Carbon Chemicals Company (ORNL)	25- 36
Carbide and Carbon Chemicals Company (Y-12 Plant)	37- 42
Chicago Patent Group	43
Chief of Naval Research	44
Department of the Navy - Op 3	45
duPont Company	46- 50
General Electric Company (ANPP)	51- 53
General Electric Company, Richland	54- 57
Hanford Operations Office	58
Idaho Operations Office	59- 65
Iowa State College	66
Knolls Atomic Power Laboratory	67- 70
Los Alamos Scientific Laboratory	71- 72
Massachusetts Institute of Technology	73
Mound Laboratory	74- 76
National Advisory Committee for Aeronautics, Cleveland	77
National Advisory Committee for Aeronautics, Washington	78
New York Operations Office	79- 80
North American Aviation, Inc.	81- 82
Nuclear Development Associates, Inc.	83
Patent Branch, Washington	84
RAND Corporation	85
San Francisco Operations Office	86
Savannah River Operations Office, Augusta	87
Savannah River Operations Office, Wilmington	88
University of California Radiation Laboratory	89- 90
Vitro Corporation of America	91
Walter Kidde Nuclear Laboratories, Inc.	92
Westinghouse Electric Corporation	93- 96
Wright Air Development Center	97-104
Technical Information Service, Oak Ridge,	105-114