NUREG/CR-4628
ORNL/TM-9890

ornl

OAK RIDGE
NATIONAL
LABORATORY

MARTIN MARIETTA

Relative Age-Specific Radiation Dose Commitment Factors for Major Radionuclides Released from Nuclear Fuel Facilities

M. Cristy
R. W. Leggett
D. E. Dunning Jr.
K. F. Eckerman

ChemRisk Document No. 365

AGED BY
TIN MARIETTA ENERGY SYSTEMS, INC.
THE UNITED STATES
RTMENT OF ENERGY

NOTICE

This report was prepared as an account of work sponsored by an agency of the United States Government. Neither the United States Government nor any agency thereof, or any of their employees, makes any warranty, expressed or implied, or assumes any legal liability or responsibility for any third party's use, or the results of such use, of any information, apparatus product or process disclosed in this report, or represents that its use by such third party would not infringe privately owned rights.

Available from

Superintendent of Documents
U.S. Government Printing Office
Post Office Box 37082
Washington, D.C. 20013-7982

and

National Technical Information Service
Springfield, VA 22161

NUREG/CR-4628
ORNL/TM-9890
Dist. Category RH

Health and Safety Research Division

RELATIVE AGE-SPECIFIC RADIATION DOSE COMMITMENT FACTORS FOR MAJOR RADIONUCLIDES RELEASED FROM NUCLEAR FUEL FACILITIES

M. Cristy, R. W. Leggett,
D. E. Dunning, Jr.,[1] and K. F. Eckerman

[1]Present address: The Maxima Corporation, 107 Union Valley Rd., Oak Ridge, TN 37830

NOTICE: This document contains information of a preliminary nature. It is subject to revision or correction and therefore does not represent a final report.

Manuscript Completed - May 1986
Date Published - June 1986

Prepared for the
Uranium Fuel Licensing Branch
Division of Fuel Cycle and Material Safety
U.S. Nuclear Regulatory Commission
Washington, DC 20555
Under Interagency Agreement DOE 40-550-75

NRC FIN No. B0293

Prepared by the
OAK RIDGE NATIONAL LABORATORY
Oak Ridge, Tennessee 37831
operated by
MARTIN MARIETTA ENERGY SYSTEMS, INC.
for the
U.S. DEPARTMENT OF ENERGY
Contract No. DE-AC05-84OR21400

CONTENTS

	Page
LIST OF FIGURES	v
LIST OF TABLES	vii
ACKNOWLEDGEMENTS	ix
ABSTRACT	xi
CHAPTER I. INTRODUCTION	1
PURPOSE AND SCOPE	1
CURRENT APPROACHES TO AGE-SPECIFIC DOSIMETRIC MODELING	3
REFERENCES FOR CHAPTER I	5
CHAPTER II. AGE-SPECIFIC RETENTION MODELS	7
GENERAL DESCRIPTION OF THE MODELING APPROACH	7
AGE-SPECIFIC PARAMETER VALUES FOR THE ELEMENTS IN THIS STUDY	12
Thorium	12
Radium	14
Uranium	17
Lead	19
Polonium	22
Bismuth	23
Thallium	23
Radon	26
Actinium and protactinium	26
Age-specific gastrointestinal absorption fractions	28
REFERENCES FOR CHAPTER II	32
CHAPTER III. IMPLEMENTATION OF AGE-DEPENDENT DOSIMETRIC METHODS	43
DEFINITIONS AND BACKGROUND INFORMATION	43
THE MATRIX OF DOSE RATES CALCULATED BY AGEDOS	44
THE GENERAL SCHEME FOR ESTIMATING THE DISTRIBUTION OF ACTIVITY OF RADIONUCLIDES IN THE BODY	47
CONVERTING FROM ACTIVITY TO DOSE RATES	50
Photon emissions	52
Beta and electron decay	54
Alpha particle decay	54
Calculation of S-factors for different age groups	54
REFERENCES FOR CHAPTER III	58
CHAPTER IV. RELATIVE AGE-SPECIFIC DOSE-CONVERSION FACTORS	61
REFERENCES FOR CHAPTER IV	62

LIST OF FIGURES

Figure		Page
II-1	Schematic diagram of the compartments and pathways used in the uptake and retention models	8
III-1	External views of the phantoms and superimposed cross-sections within the middle trunk of the newborn and adult phantoms	56
III-2	Specific absorbed fractions (S.A.F.'s) for photons for various source and target organs, energies, and ages	57

LIST OF TABLES

Table		Page
II-1	Age-dependent metabolic parameters for thorium	13
II-2	Age-dependent metabolic parameters for radium	15
II-3	Age-dependent metabolic parameters for uranium	18
II-4	Age-dependent metabolic parameters for lead	20
II-5	Age-dependent metabolic parameters for polonium	21
II-6	Age-dependent metabolic parameters for bismuth	24
II-7	Age-dependent metabolic parameters for thallium	25
II-8	Age-dependent metabolic parameters for radon	27
III-1	The matrix of dose rates to a specified tissue illustrative of the matrix calculated by AGEDOS	45
IV-1	Ingestion case. AGEDOS grid	64
IV-2	Inhalation case. Agedos grid	68
IV-3	Ingestion case. NRC age groups	88
IV-4	Ingestion case. NRC age groups. Dose to bone	92
IV-5	Inhalation case. NRC age groups	93
IV-6	Inhalation case. NRC age groups. Dose to bone	107

ACKNOWLEDGEMENTS

We thank R. E. Swaja and J. P. Witherspoon for reviewing the manuscript. We also appreciate the yeoman's job that Mrs. Barbie Warren did in preparing the manuscript for publication.

ABSTRACT

During the licensing process for nuclear fuel facilities, committed dose equivalents must be calculated for potential exposures to people in the area around these facilities. These committed dose equivalents are usually calculated from tabulated dose-conversion factors that convert the quantity of radioactive material potentially taken in by individuals through ingestion or inhalation. For calculating committed dose equivalents to children, the Nuclear Regulatory Commission has in the past appealed to age-specific dose-conversion factors listed in NUREG-0172 (1977), which is based on a computational methodology found in ICRP Publication 2 (1959). Since the publication of NUREG-0172 new models and new concepts of risk have been provided in ICRP Publications 26 and 30 (1977,1979). These documents provide a detailed methodology for calculating dose-conversion factors for the various radionuclides for an adult reference man. The report NUREG/CR-0150 (1981) provides dose-conversion factors for an adult based on ICRP Publications 26 and 30 but does not provide dose-conversion factors for children. In this report are tabulated age-specific dose-conversion factors, given as multiples of the adult values, for inhalation or ingestion of each of the following isotopes: U-234, U-235, U-238, Th-228, Th-230, Th-232, Ra-226, Ra-228, Pb-210, or Po-210. Our methodology is consistent as far as practical with that of ICRP Publications 26 and 30, but we have modified and extended the ICRP methodology as necessary to include age dependence and to include metabolic and dosimetric information that has been developed since the issuance of these ICRP documents.

CHAPTER I. INTRODUCTION

PURPOSE AND SCOPE

During the licensing process for nuclear fuel facilities, committed dose equivalents must be calculated for potential exposures to people in the area around these facilities. These committed dose equivalents are usually calculated from tabulated dose-conversion factors that convert the quantity of radioactive material potentially taken in by individuals through ingestion or inhalation. Since potentially exposed populations could include persons of all ages, it is important that the tabulated dose-conversion factors account for known or expected differences with age in doses from a unit intake. These age-specific dose conversion factors can then be applied to a variety of real or hypothetical exposures by assigning age-dependent intakes that are tailored to specific exposures.

In the past the U. S. Nuclear Regulatory Commission (NRC) has appealed to age-specific dose-conversion factors listed in NUREG-0172,[1] which is based on a computational methodology found in Publication 2 of the International Commission on Radiological Protection (ICRP).[2] Since the publication of NUREG-0172 new models and new concepts of risk have been provided in ICRP Publication 26 (1977)[3] and ICRP Publication 30 (1979).[4] These documents provide a detailed methodology for calculating dose-conversion factors for the various radionuclides for an adult reference man. The report NUREG/CR-0150[5] of the NRC provides dose-conversion factors for an adult based on ICRP Publications 26 and 30 but does not provide age-specific dose-conversion factors. Up-to-date age-specific dose-conversion factors covering the major radionuclides released from nuclear fuel facilities are needed to allow more realistic evaluation of the hazards of potential effluent releases from these facilities.

The purpose of this study is to develop a set of relative age-specific dose-conversion factors for inhalation or ingestion of each of the following isotopes: U-234, U-235, U-238, Th-228, Th-230, Th-232, Ra-226, Ra-228, Pb-210, or Po-210. By 'relative' factors we mean that the dose-conversion factors derived in this report for nonadults are presented only as a multiple of the adult value, which is taken to be unity.

The tabulation of relative rather than absolute conversion factors is based on the following considerations. Although our methodology is consistent as far as practical with that of ICRP 26 and ICRP 30, it was necessary to modify and extend the ICRP methodology to include age dependence and to include metabolic and dosimetric information that has been developed since the issuance of these ICRP documents. The modified methodology is sufficiently different from the ICRP methodology that the new values derived for the adult are seldom if ever identical to those given in NUREG/CR-0150, for example. Moreover, we are often more confident of our knowledge of the general trend with age than in the absolute values at any stage of life (including adult) for some of the age-specific parameter values used in our models (for example, gastrointestinal absorption fractions and bone remodeling rates). We believe that the tabulation of relative rather than absolute values will allow the user to begin to consider the variation with age in committed dose equivalents that will occur in a given exposure situation, while still applying the basic guidance for adults recommended by the ICRP.

Relative dose conversion factors are developed for exposure as an infant (birth to one year of age), a child (1-11 years), a teenager (11-17 years), or an adult (over 17 years). The relative dose-conversion factors for each age group are based on a total intake of one unit of activity (for example, one becquerel or one microcurie) of a given radionuclide, with the intake being uniform over a period of one year. Applications of these values should include consideration of variation with age in radionuclide intake, which may depend on the exposure scenario.

The relative dose conversion factors are calculated using a computer code called AGEDOS[6] that calculates dose rates and committed dose equivalents for acute unit intakes at ages 0, 100, 365, 1825, 3650, 5475, and 7300 days (0, 0.3, 1, 5, 10, 15, and 20 years). The 50-year committed dose equivalents due to a unit intake over a one-year period as an infant are approximated as an average of 50-year committed dose equivalents due to acute unit intakes at ages 0 and 365 days; those for a child are approximated as 50-year committed dose equivalents due to an acute unit intake at age 1825 days (5 years); those for a teenager are

approximated using an acute unit intake at age 5475 days (15 years); and those for an adult are approximated using an acute unit intake at age 7300 days (20 years). More involved approximation methods do not appear to be warranted at this stage of development of age-specific metabolic models.

CURRENT APPROACHES TO AGE-SPECIFIC DOSIMETRIC MODELING

The internal dosimetric models recommended in ICRP Publication 30 were designed and intended for interpreting occupational exposures of a typical adult. These models are generally considered to be the best supported comprehensive set of internal dosimetric models and are frequently used in one of two ways for evaluation of exposures to the general population. (1) In some cases it is assumed, in effect, that all members of the population experience the doses estimated using the ICRP models for adults. For example, in a methodology developed recently by the U. S. Environmental Protection Agency (EPA) to estimate health risk to the public from exposure to any of about 150 radionuclides, models for the adult as given in ICRP Publication 30 were applied to all age groups.[7] (2) In other cases the metabolic properties of the adult are assigned to other age groups but account is taken of the generally greater dose per unit activity that results from the smaller organ masses in children. This approach was taken for most radionuclides in a recent tabulation of dose-conversion factors issued by the National Radiological Protection Board (NRPB) of the United Kingdom, although age-specific metabolic models were used for hydrogen, carbon, sulfur, and iodine.[8] A similar approach was taken in an earlier document issued by the U. S. Nuclear Regulatory Commission (NUREG-0172),[1] except that metabolic models and general dosimetric methods were based on ICRP Publication 2.

Thus, the second approach incorporates part of the known differences with age into calculations of age-specific dose-conversion factors, namely, the anatomical differences. On the other hand, this approach excludes many known or expected differences with age in the biological behavior of radionuclides that could conceivably lead to substantial age dependence in doses from environmental exposures. For example, the immature skeleton tends to accumulate a higher fraction of

various metals from blood than does the mature skeleton. Also, the younger skeleton has a much higher rate of remodeling than the older skeleton, resulting in faster removal of activity from both the surfaces and volume of bones. It seems difficult to justify including anatomical differences with age in calculation of dose-conversion factors while excluding consideration of such known or expected differences with age in the biobehavior of elements.

There is, however, a problem in incorporating the large but scattered body of information related to the age-specific biobehavior of elements into dose calculations within the limitations of the format and underlying concepts of the retention models given in ICRP Publication 30. Each of the ICRP retention models is a concise mathematical summary of observations and assumptions concerning the net retention of a radioelement in organs or the whole body of adult humans. For the most part, these models are based on (1) direct observations of the early distribution and the net retention of radioelements in organs or whole bodies of experimental animals and humans, (2) the equilibrium distribution of elements in Reference Man as described in ICRP Publication 23[9], (3) analogies among chemical families of elements, and (4) broad assumptions. Each of (1)-(3) is an invaluable source of information, and we must expect to encounter some broad assumptions in areas where direct observations are lacking. The main problem is that the requirement of a simple mathematical format and the lack of a firm physiological foundation preclude the incorporation of a great deal of valuable physiological information and physiologically reasonable assumptions that could be used in characterizing the behavior of radioelements in adults and extending the models for adults to other age groups.

In this report we apply an approach to age-dependent dosimetric modeling intended to allow consideration of best available data on differences with age in intake, uptake, distribution, and retention of radionuclides as well as in the masses and geometries of the organs and tissues of the body. With our approach, a model framework is constructed in terms of physically identifiable compartments and processes that appear to control behavior of a radioelement. As far as possible, the parameter values for such a model are chosen from information on

human biometrics, and, if available, any element-specific information for humans. For example, depending on the radioelement, it may be reasonable to describe retention and translocation within the skeleton and release from skeleton to blood at different ages in terms of the age-specific bone growth and remodeling rates. In addition to certain advantages for age-specific modeling, this approach has other advantages over the ICRP modeling approach: it allows more meaningful extrapolation of data from animals to humans; it permits more realistic treatment of daughter products of some nuclides; and in some cases it leads to improved estimate of doses to heterogeneously distributed radiosensitive tissues.

REFERENCES FOR CHAPTER I

[1] Hoenes, G. R. and Soldat, J. K., Age-Specific Radiation Dose Commitment Factors for a One-Year Chronic Intake, U.S. Nuclear Regulatory Commission Report NUREG-0172, 1977.

[2] International Commission on Radiological Protection, Publication 2, Report of Committee 2 on Permissible Dose for Internal Radiation, Pergamon Press, Oxford, 1959.

[3] International Commission on Radiological Protection, Publication 26, Annals of the ICRP 1, Pergamon Press, Oxford, 1977.

[4] International Commission on Radiological Protection, Publication 30, Limits for Intakes by Workers, Pergamon Press, Oxford, 1979.

[5] Dunning, D. E., Killough, G. G., Bernard, S. R., Pleasant, J. C., Walsh, P. J., Estimates of Internal Dose Equivalent to 22 Target Organs for Radionuclides Occurring in Routine Releases from Nuclear Fuel-Cycle Facilities, Vol. III, U.S. Nuclear Regulatory Commission Report NUREG/CR-0150 (Oak Ridge National Laboratory Report ORNL/NUREG/TM-190/V3), 1981.

[6] Leggett, R. W., Eckerman, K. F., Dunning, D. E., Jr., Cristy, M., Crawford-Brown, D. J., and Williams, L. R., On Estimating Dose Rates to Organs as a Function of Age Following Internal Exposure to Radionuclides, Oak Ridge National Laboratory Report ORNL/TM-8265, 1984.

[7] Sullivan, R. E., Nelson, N. S., Ellett, W. H., Dunning, D. E., Leggett, R. W., Yalcintas, M. G., and Eckerman, K. F., Estimates of Health Risk from Exposure to Radioactive Pollutants, Oak Ridge National Laboratory Report ORNL/TM-7745, 1981.

[8] Greenhalgh, J. R., Fell, T. P., and Adams, N., Doses from Intakes of Radionuclides by Adults and Young People, Report of the National Radiological Protection Board, NRPB-R162, Chilton, Didcot, Oxon OX11 0RQ, 1985.

[9] International Commission on Radiological Protection, Publication 23, Report of the Task Group on Reference Man, Pergamon Press, Oxford, 1975.

CHAPTER II. AGE-SPECIFIC RETENTION MODELS

GENERAL DESCRIPTION OF THE MODELING APPROACH

The general scheme used to model the behavior of all parent and daughter nuclides in this study is shown in Fig. II-1. This scheme was designed as a 'least common denominator' that would apply to all of the parent and daughter nuclides considered in this study. For any given parent nuclide, not all paths shown in Fig. II-1 were involved in the calculations. For example, in the model for retention and translocation of Pb-210 by the skeleton, activity was assumed to be deposited on bone surfaces along paths K and L, move from there to bone volume along paths A and C, and eventually be taken back to plasma by paths M and N. Thus, the other indicated paths in the skeleton were not involved in the description of skeletal retention of Pb-210. On the other hand, the two bone marrow compartments as well as paths E, B, G, I, F, H, D, and J in Fig. II-1 were used in the model for thorium isotopes. The usefulness of a physiologically based scheme for modeling the biobehavior of radionuclides and the advantages of such an approach over the empirical modeling scheme used in ICRP Publication 30[1] have been demonstrated in Refs. 2-5, for example.

The model of deposition and transport in the respiratory tract used in this study is the Task Group Lung Model (TGLM) of the ICRP.[6] This model was designed to apply to a reference adult and does not include age-dependent parameters. It appears from present limited information that variation with age in fractional deposition and rate of transport of material in the respiratory tract is not strong (although variation of <u>intake</u> with age will be strong) and may be within the limits of uncertainty of the TGLM, particularly for the small particle sizes expected in environmental exposures. (For example, see the age-specific model predictions in Refs. 7 and 8 and the experimental values in Ref. 9.) Thus, until better information is available it is reasonable to assume that the parameter values of the ICRP TGLM apply to persons of all ages. Since the relative dose conversion factors developed in this report assume a unit intake at all ages, the much different inhalation rates at different ages should be considered in applications of these factors.

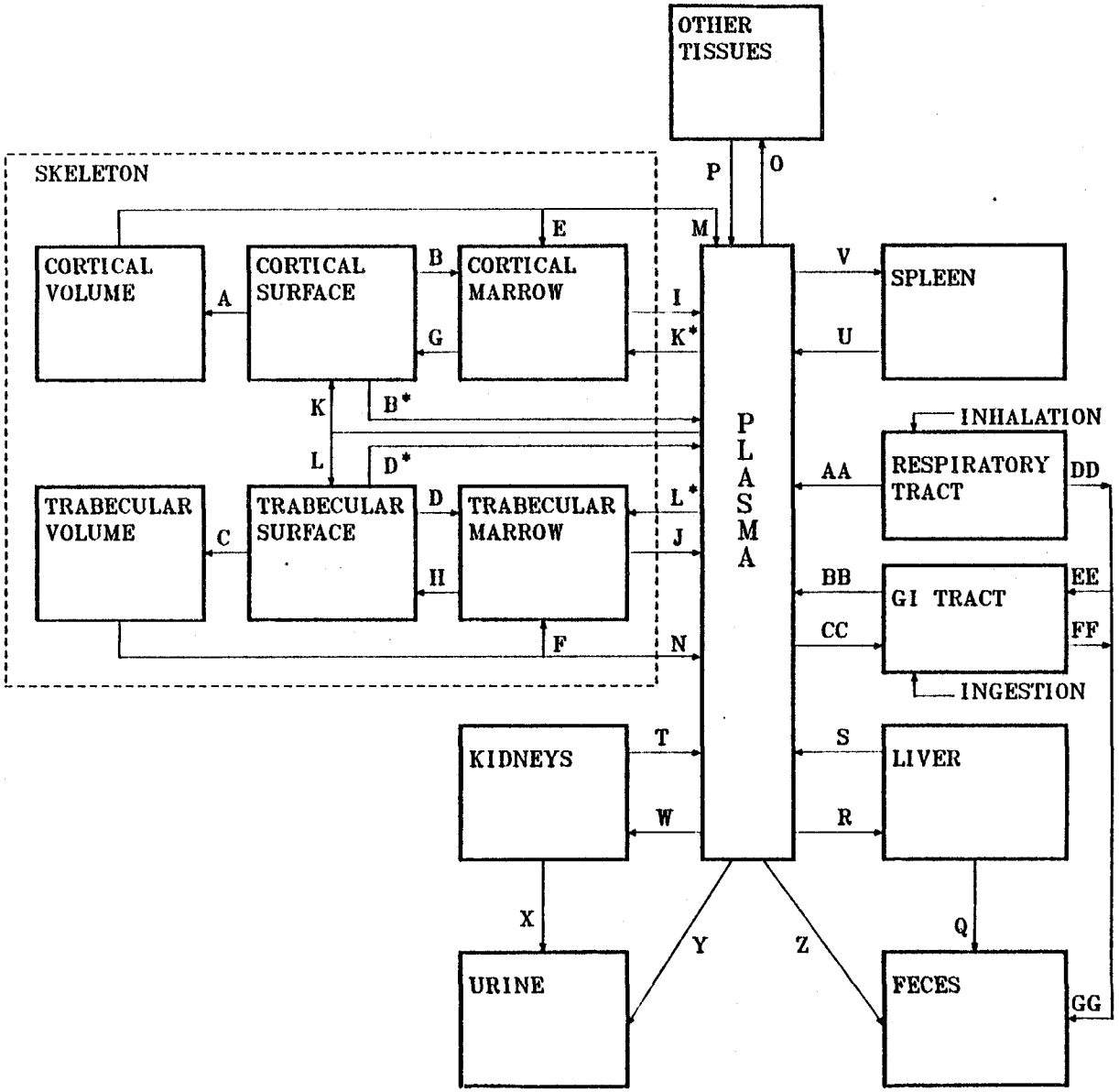

Figure II-1. Schematic diagram of the compartments and pathways used in the uptake and retention models.

The model of the gastrointestinal (GI) tract used in this study is essentially the GI tract model of the ICRP,[10] which was developed for a reference adult. It appears that variation with age in transit times through the GI tract, although not well characterized at this time, may be within the limits of uncertainty of the parameter values in the ICRP model for adults, except possibly for a portion of the large intestine (e.g, see Fig. 1 of Ref. 11). Thus, it appears reasonable to apply the transit times in the ICRP model of the GI tract to all age groups. On the other hand, there could be substantial age dependence in the fraction f_1 of ingested activity that is absorbed from the small intestine to blood (this is discussed later in the section "Age-specific gastrointestinal absorption fractions"). For this reason we assign age-specific values to f_1, whereas in Publication 30 of the ICRP only a single value for the reference adult is applied. Since the relative dose conversion factors for ingestion developed in this study are based on a unit intake of a given nuclide regardless of the person's age at exposure, the different rates of intake of contaminated food or water at different ages should be considered in applications of these factors.

The major systemic organs considered are skeleton, kidneys, liver, spleen, and 'other tissues', the latter consisting of the total body minus the first four organs, the respiratory tract, and the GI tract (Fig. II-1). As described below, some of these organs are subdivided into multiple compartments, where each compartment is assumed to represent a homogeneous pool of activity. Plasma serves as an important transfer compartment, although it is not the only means of transfer of activity from one compartment to another in this model. Material initially reaching plasma from the respiratory or GI tract is transferred at an element-specific rate to skeletal surfaces, kidneys, liver, other tissues, or excretion. Activity reaching the kidneys may be returned to plasma or excreted in urine. Activity deposited in the liver may be returned to plasma or be transferred to excretion via bile. Activity deposited in the spleen or in other tissue is assumed to be returned to plasma. Activity deposited in the skeleton may eventually be returned to plasma after element-specific translocation within the skeleton (as described later), or part of the skeletal activity may be retained

permanently, depending somewhat on the element and the age of the person at exposure. The redistribution of activity that has been recycled to plasma from the systemic organs is assumed to be the same as that of the activity originally reaching plasma from the respiratory or GI tract. For computational purposes, activity that is thought to reach feces after transfer from blood to the intestines (path CC followed by path FF in Fig. II-1) is depicted as going directly from blood to excretion.

Activity in 'other tissues' will be assumed to reside in two pools, called OTHER1 and OTHER2. For the sake of uniformity this is done for all cases, although two pools are required in only three cases to adequately describe retention. For uranium, radium, and lead, in particular, there appear to be two distinct compartments in other tissues, with longer retention times conjectured to be associated to a large extent with residence in mitochondria. For the remaining elements that appear as parent or daughter nuclides in this study (thorium, polonium, bismuth, actinium, protactinium, thallium, and radon), the distinction between OTHER1 and OTHER2 is an artificial one, since identical uptake fractions and removal rates are assigned to both pools.

Because of the nonuniform structure of the skeleton and its propensity to accumulate a large fraction of the systemic activity of several of the nuclides considered in this study, it is helpful to consider this organ in some detail. In our model the skeleton is divided into six compartments, three associated with cortical bone and three with trabecular bone. Each of these bone types is divided into bone surface, bone volume (surface and volume are as defined in Publication 20 of the ICRP[12]), and bone marrow. In the nonadult, the active (red) marrow is distributed in both cortical and trabecular bone, but in the adult the active marrow is contained almost exclusively within trabecular bone.

For all radionuclides in this study, activity reaching the skeleton from plasma is assumed to be deposited initially on bone surfaces (paths K and L in Fig. II-1). Two additional paths from blood to skeleton (K* and L*) have been included in the scheme for eventual consideration of colloidal or polymeric forms of certain elements, but these paths were not used in the present analysis. Depending on the element, activity leaving bone surface may enter bone volume (paths A and C), bone marrow (paths B and D), or plasma (B* and D*). Activity leaving bone marrow is

assumed to go to plasma (I and J); potential paths from bone marrow to bone surface (G and H) have been included for eventual use but are not used in this study. Activity leaving bone volume may go either to marrow (E and F) or to plasma (M and N), again depending on the element.

Some of the isotopes of this study give rise to daughter products that are of dosimetric significance, and the behavior of these daughters must also be modeled. Thus, it was necessary to derive age-specific parameter values not only for the parent isotopes considered in this study (isotopes of uranium, thorium, radium, lead, and polonium), but also for isotopes appearing as daughters (isotopes of protactinium, actinium, radon, bismuth, and thallium). In Publication 30 of the ICRP, it is generally assumed that all daughter radionuclides born in the body remain with the parent radionuclide (radon is one exception). This may be a reasonable assumption if the daughter is very short-lived, and in some cases it appears to be true for fairly long-lived daughters. It has been demonstrated, however, that this assumption is not valid for many chains of radionuclides.[2] The ICRP metabolic modeling approach is not flexible enough to incorporate more reasonable assumptions into the treatment of daughter products, but the physiological approach used in the present study can be used to apply the best available information on all daughter products to follow members of a chain through their potentially different routes through the body.[2]

For each of the radioelements involved in this study as either a parent or daughter nuclide, an age-dependent uptake-retention model was derived by assigning age-specific rate constants to the paths (arrows) shown in Fig. II-1. This was done for each of seven ages: newborn, 100 days, 1 year, 5 years, 10 years, 15 years, and adult. In the following section we describe briefly the derivation of these rate constants. It should be noted in the descriptions that follow that the most important changes with age depicted in these models generally involve the greater propensity of the younger skeleton for metals, the greater growth and remodeling rates of the skeleton at younger ages, the smaller amount of activity assigned to the compartment 'other tissues' and/or to excretion at smaller ages, and the greater fraction of activity absorbed from the small intestine to blood at younger ages. The smaller fraction sometimes assigned to 'other tissues' at younger ages usually was based less

on element-specific information or physiological principles than on the requirement for balancing the greater fraction going to the skeleton at younger ages.

We emphasize that age-dependent metabolic modeling is a rapidly evolving area of study. Although the parameter values given here are based on best available information at the time of publication of this report, we expect that some of these values will be altered in the near future as our research efforts proceed.

We also emphasize that each of the descriptions that follow represents only a brief summary of the considerations that went into the choices of parameter values. The reader may get a better notion of the total considerations involved in development of a physiologically based model of the type described here from the descriptions in Refs. 3 and 5.

AGE-SPECIFIC PARAMETER VALUES FOR THE ELEMENTS IN THIS STUDY

Thorium

Thorium appears both as a parent and as a daughter product in the chains considered in this study. The age-dependent parameter values for the thorium retention model are given in Table II-1. These parameter values were based on consideration of information on the behavior of thorium in young adult animals and adult humans,[13-15] the distribution of environmental thorium found in humans,[16,17] comparison of the behavior of thorium and plutonium in the body,[3,17,18] and basic physiological information on modeling and remodeling processes in the human skeleton at various ages.[3,5]

Using limited data for adult humans,[15] we estimate that only 6% of an initial unit activity of thorium in plasma will be promptly excreted. ('Promptly excreted' will be used to refer to the fraction of activity in plasma which goes to excretion along paths Y, Z, and CC-FF but not X or Q in Fig. II-1.) The promptly excreted fraction is assumed to be independent of age.

Thorium deposits primarily in the skeleton, and its behavior in the skeleton appears to be governed by the same processes that govern the behavior of plutonium, namely, bone growth and remodeling processes.[3,18] Bone-seeking elements generally have a higher affinity for the younger

TABLE II-1. AGE-DEPENDENT METABOLIC PARAMETERS FOR THORIUM

	AGE (DAYS)						
	0	100	365	1825	3650	5475	>7300
FRACTION OF INGESTED ACTIVITY ABSORBED FROM SMALL INTESTINE TO PLASMA	0.100E-01	0.500E-02	0.500E-03	0.500E-03	0.500E-03	0.500E-03	0.200E-03
REMOVAL RATE FROM PLASMA TO ORGANS OR TO EXCRETION (DAY^{-1})	0.139E+01	0.139E+01	0.139E+01	0.139E+01	0.139E+01	0.139E+01	0.139E+01
FRACTION OF ACTIVITY GOING FROM PLASMA DIRECTLY TO EXCRETION	0.600E-01	0.600E-01	0.600E-01	0.600E-01	0.600E-01	0.600E-01	0.600E-01
FRACTION OF NON-EXCRETED ACTIVITY IN PLASMA GOING TO COMPARTMENT:							
TRABECULAR BONE SURFACE	0.400E+00	0.400E+00	0.400E+00	0.400E+00	0.400E+00	0.400E+00	0.350E+00
CORTICAL BONE SURFACE	0.400E+00	0.400E+00	0.400E+00	0.400E+00	0.400E+00	0.400E+00	0.350E+00
KIDNEYS	0.700E-02	0.700E-02	0.700E-02	0.700E-02	0.700E-02	0.700E-02	0.700E-02
LIVER	0.400E-01	0.400E-01	0.400E-01	0.400E-01	0.400E-01	0.400E-01	0.400E-01
SPLEEN	0.400E-02	0.400E-02	0.400E-02	0.400E-02	0.400E-02	0.400E-02	0.400E-02
OTHER1	0.745E-01	0.745E-01	0.745E-01	0.745E-01	0.745E-01	0.745E-01	0.124E+00
OTHER2	0.745E-01	0.745E-01	0.745E-01	0.745E-01	0.745E-01	0.745E-01	0.124E+00
NON-ZERO REMOVAL RATES FROM COMPARTMENTS (DAY^{-1}):							
TRABECULAR BONE SURFACE TO BONE VOLUME	0.102E-01	0.822E-02	0.288E-02	0.181E-02	0.132E-02	0.959E-03	0.246E-03
CORTICAL BONE SURFACE TO BONE VOLUME	0.102E-01	0.822E-02	0.288E-02	0.153E-02	0.904E-03	0.521E-03	0.410E-04
TRABECULAR BONE VOLUME TO BONE MARROW	0.102E-01	0.822E-02	0.288E-02	0.181E-02	0.132E-02	0.959E-03	0.493E-03
CORTICAL BONE VOLUME TO BONE MARROW	0.102E-01	0.822E-02	0.288E-02	0.153E-02	0.904E-03	0.521E-03	0.821E-04
TRABECULAR BONE SURFACE TO BONE MARROW	0.102E-01	0.822E-02	0.288E-02	0.181E-02	0.132E-02	0.959E-03	0.493E-03
CORTICAL BONE SURFACE TO BONE MARROW	0.102E-01	0.822E-02	0.288E-02	0.153E-02	0.904E-03	0.521E-03	0.821E-04
TRABECULAR BONE MARROW TO PLASMA	0.770E-02	0.770E-02	0.770E-02	0.770E-02	0.770E-02	0.770E-02	0.770E-02
CORTICAL BONE MARROW TO PLASMA	0.770E-02	0.770E-02	0.770E-02	0.770E-02	0.770E-02	0.770E-02	0.770E-02
KIDNEYS TO PLASMA	0.139E-02	0.139E-02	0.139E-02	0.139E-02	0.139E-02	0.139E-02	0.139E-02
LIVER TO PLASMA	0.125E-02	0.125E-02	0.125E-02	0.125E-02	0.125E-02	0.125E-02	0.125E-02
LIVER TO EXCRETION	0.139E-03	0.139E-03	0.139E-03	0.139E-03	0.139E-03	0.139E-03	0.139E-03
SPLEEN TO PLASMA	0.139E-02	0.139E-02	0.139E-02	0.139E-02	0.139E-02	0.139E-02	0.139E-02
OTHER1 TO PLASMA	0.139E-02	0.139E-02	0.139E-02	0.139E-02	0.139E-02	0.139E-02	0.139E-02
OTHER2 TO PLASMA	0.139E-02	0.139E-02	0.139E-02	0.139E-02	0.139E-02	0.139E-02	0.139E-02

skeleton than for the mature skeleton,[19] but in the case of thorium there may be little difference with age in the fraction of systemic activity going to the skeleton because this fraction is large (perhaps 0.7) in the mature adult.[1]

We assume that, in the adult, 70% of the unexcreted activity in plasma is deposited in the skeleton (with equal amounts going to trabecular and cortical surfaces), 4% in the liver, 0.7% in the kidneys, 0.4% in the spleen, and the remainder (24.9%) in other tissues. This distribution is consistent with, but is more detailed than, the distribution for thorium given in ICRP Publication 30. For nonadults we assume that 80% of the unexcreted activity is deposited uniformly in the skeleton; the other deposition fractions are assumed to be the same as in the adult, except that only 14.9% is assumed to go to other tissues.

As for plutonium, the portion of thorium going to the skeleton appears to deposit initially on skeletal surfaces but may slowly become buried in bone volume during bone remodeling processes; thorium may also gradually become uncovered and returned to systemic circulation by these processes.[18] The rate constants for bone remodeling processes are much greater in children than adults;[5] hence it is expected that thorium will be removed from the radiosensitive cells near the bone surfaces much faster in children than in adults. The rate constants for movement of thorium among the skeletal compartments and plasma are based on the same scheme as our age-dependent skeletal models for plutonium, americium, and curium discussed in NUREG/CR-3535.[4] The reader is referred to that report and to Ref. 3 for more details.

Radium

Radium appears both as a parent and as a daughter product in the chains considered in this study. The age-dependent parameter values for the radium retention model are given in Table II-2. These values are based on data for radium in adult humans (these data are surveyed in Refs. 12 and 20), age-dependent concentrations of radium in human bone,[21] data on radium in newborn, juvenile, and adult dogs,[22-25] and comparison of the behavior of radium and the physiologically similar element strontium, for which there is a great deal of age-specific metabolic data.[5] (We note that values proportional to age-specific

TABLE II-2. AGE-DEPENDENT METABOLIC PARAMETERS FOR RADIUM

	AGE (DAYS)						
	0	100	365	1825	3650	5475	>7300
FRACTION OF INGESTED ACTIVITY ABSORBED FROM SMALL INTESTINE TO PLASMA	0.640E+00	0.600E+00	0.400E+00	0.280E+00	0.320E+00	0.360E+00	0.200E+00
REMOVAL RATE FROM PLASMA TO ORGANS OR TO EXCRETION (DAY^{-1})	0.277E+01	0.277E+01	0.277E+01	0.277E+01	0.277E+01	0.277E+01	0.277E+01
FRACTION OF ACTIVITY GOING FROM PLASMA DIRECTLY TO EXCRETION	0.156E+00	0.156E+00	0.156E+00	0.156E+00	0.156E+00	0.156E+00	0.156E+00
FRACTION OF NON-EXCRETED ACTIVITY IN PLASMA GOING TO COMPARTMENT:							
TRABECULAR BONE SURFACE	0.120E+00	0.120E+00	0.800E-01	0.600E-01	0.800E-01	0.110E+00	0.120E+00
CORTICAL BONE SURFACE	0.520E+00	0.480E+00	0.320E+00	0.200E+00	0.220E+00	0.260E+00	0.800E-01
KIDNEYS	0.800E-02	0.800E-02	0.800E-02	0.800E-02	0.800E-02	0.800E-02	0.800E-02
LIVER	0.700E-01	0.700E-01	0.700E-01	0.700E-01	0.700E-01	0.700E-01	0.700E-01
SPLEEN	0.400E-02	0.400E-02	0.400E-02	0.400E-02	0.400E-02	0.400E-02	0.400E-02
OTHER1	0.276E+00	0.316E+00	0.514E+00	0.653E+00	0.614E+00	0.544E+00	0.713E+00
OTHER2	0.195E-02	0.223E-02	0.363E-02	0.461E-02	0.433E-02	0.384E-02	0.503E-02
NON-ZERO REMOVAL RATES FROM COMPARTMENTS (DAY^{-1}):							
TRABECULAR BONE SURFACE TO PLASMA	0.386E+00	0.386E+00	0.386E+00	0.386E+00	0.386E+00	0.386E+00	0.386E+00
CORTICAL BONE SURFACE TO PLASMA	0.386E+00	0.386E+00	0.386E+00	0.386E+00	0.386E+00	0.386E+00	0.386E+00
TRABECULAR BONE SURFACE TO BONE VOLUME	0.205E-01	0.205E-01	0.203E-01	0.192E-01	0.185E-01	0.178E-01	0.137E-01
CORTICAL BONE SURFACE TO BONE VOLUME	0.205E-01	0.205E-01	0.203E-01	0.192E-01	0.185E-01	0.178E-01	0.137E-01
TRABECULAR BONE VOLUME TO PLASMA	0.102E-01	0.822E-02	0.288E-02	0.181E-02	0.132E-02	0.959E-03	0.493E-03
CORTICAL BONE VOLUME TO PLASMA	0.102E-01	0.822E-02	0.288E-02	0.153E-02	0.904E-03	0.521E-03	0.821E-04
KIDNEYS TO PLASMA	0.693E+00	0.693E+00	0.693E+00	0.693E+00	0.693E+00	0.693E+00	0.693E+00
LIVER TO PLASMA	0.0	0.0	0.0	0.0	0.0	0.0	0.0
LIVER TO EXCRETION	0.693E+00	0.693E+00	0.693E+00	0.693E+00	0.693E+00	0.693E+00	0.693E+00
SPLEEN TO PLASMA	0.693E+00	0.693E+00	0.693E+00	0.693E+00	0.693E+00	0.693E+00	0.693E+00
OTHER1 TO PLASMA	0.693E+00	0.693E+00	0.693E+00	0.693E+00	0.693E+00	0.693E+00	0.693E+00
OTHER2 TO PLASMA	0.301E-02	0.301E-02	0.301E-02	0.301E-02	0.301E-02	0.301E-02	0.301E-02

deposition fractions or removal rates that have been derived elsewhere[4,5] for strontium will be used at some points in the models for various elements considered in this study. Although these elements are not expected to behave in precisely the same manner as strontium, the early deposition patterns followed by strontium appear to be common to several divalent cations, and the translocation of many elements in the skeleton appears to be controlled in the same way as strontium, namely, by growth and remodeling processes. It appears reasonable to estimate age-specific skeletal deposition fractions for radium, for example, by starting with our estimate for radium for the adult, and assigning age-specific values proportional to those derived for strontium, for which there exist much more age-specific data.)

For the adult it is assumed that 20% of the unexcreted radium in plasma is deposited on skeletal surfaces. For other ages this value is scaled to the age-specific deposition fractions that have been documented for strontium.[4,5] Also, the relative fractions going to cortical and trabecular surfaces at different ages are assumed to be the same as values previously documented for strontium.[4,5]

The rate of disappearance of radium from bone surfaces and the amount of radium retained over the long term (in bone volume) have been observed in adult humans, and these values were used to estimate removal rates from bone surfaces to plasma and from bone surfaces to bone volume. Removal rates from bone surfaces to plasma are assumed to be independent of age. Age-specific removal rates from bone surface to bone volume are estimated by scaling to age-specific bone mineralization rates. The age-specific removal rate from bone volume to plasma is assumed to be the same as the bone remodeling rate, which has been estimated in earlier studies.[4,5]

Parameter values for soft tissues are assumed to be independent of age, except that the amount going to 'other tissues' was reduced for younger ages to accommodate the higher skeletal deposition fraction at those ages. Removal rates and deposition fractions for liver, kidneys, spleen, and other tissues were chosen to best reproduce observed concentrations of radium in these tissues (generally in adults) after acute and chronic exposures.

Uranium

Uranium appears only as a parent nuclide in this study. The age-dependent parameter values for the uranium retention model are given in Table II-3. These values are based on human data for uranium (see discussion in Ref. 26 and reviews in Refs. 27-29), data for animals,[28,30] comparison of the behavior of the uranyl ion with alkaline earth metals,[30,31] and general physiological information concerning growth and remodeling of the skeleton.[3,5]

The initial deposition of the uranyl ion in the skeleton may be strongly related to that of calcium.[28,30-32] For the adult it is assumed that approximately 25% of the activity in plasma not destined for prompt excretion (which corresponds to about 10% of the total initial activity in plasma since the excretion rate is high for uranium) is deposited on bone surfaces. Age-specific skeletal deposition fractions are estimated by scaling to those estimated previously for calcium and strontium,[4,5] and the relative age-specific fractions deposited on cortical and trabecular bone are assumed to be the same as for strontium.[4,5]

Uranium leaves bone surfaces by returning to blood, by being buried in bone volume during bone remodeling processes, or by penetrating canalicular pathways to form a diffuse deposition in bone volume.[28,30,31] The rates of removal of uranium from bone surfaces to plasma and bone surfaces to bone volume in adults were chosen to be consistent with best estimates of the short-term removal of uranium from total bone (assumed to be from bone surfaces) and the fraction of the initial bone deposit retained over a long period (assumed to be due to retention in bone volume).

Deposition fractions and removal rates for the two compartments of other soft tissue are estimated from data for adult humans. Long-term retention in soft tissues may be associated with mitochondria.[30] The deposition fractions and removal rates for uranium in all soft tissue, including the kidneys, are assumed to be independent of age.

It appears that the amount of uranium excreted in the first two or three days after reaching blood decreases as the amount deposited in the skeleton increases (see data of Terepka in Ref. 29). This fact is used to estimate an age-dependent fraction of uranium promptly excreted from

TABLE II-3. AGE-DEPENDENT METABOLIC PARAMETERS FOR URANIUM

	AGE (DAYS)						
	0	100	365	1825	3650	5475	>7300
FRACTION OF INGESTED ACTIVITY ABSORBED FROM SMALL INTESTINE TO PLASMA							
SOLUBLE	0.160E+00	0.150E+00	0.100E+00	0.700E-01	0.800E-01	0.900E-01	0.500E-01
INSOLUBLE	0.640E-02	0.600E-02	0.400E-02	0.280E-02	0.320E-02	0.360E-02	0.200E-02
REMOVAL RATE FROM PLASMA TO ORGANS OR TO EXCRETION (DAY^{-1})	0.693E+01	0.693E+01	0.693E+01	0.693E+01	0.693E+01	0.693E+01	0.693E+01
FRACTION OF ACTIVITY GOING FROM PLASMA DIRECTLY TO EXCRETION	0.386E+00	0.406E+00	0.506E+00	0.576E+00	0.556E+00	0.526E+00	0.606E+00
FRACTION OF NON-EXCRETED ACTIVITY IN PLASMA GOING TO COMPARTMENT:							
TRABECULAR BONE SURFACE	0.980E-01	0.101E+00	0.810E-01	0.710E-01	0.900E-01	0.105E+00	0.157E+00
CORTICAL BONE SURFACE	0.423E+00	0.404E+00	0.324E+00	0.236E+00	0.248E+00	0.274E+00	0.960E-01
KIDNEYS	0.244E+00	0.253E+00	0.304E+00	0.354E+00	0.338E+00	0.316E+00	0.381E+00
LIVER	0.293E-01	0.303E-01	0.364E-01	0.425E-01	0.405E-01	0.380E-01	0.457E-01
SPLEEN	0.107E-01	0.970E-02	0.116E-01	0.135E-01	0.135E-01	0.140E-01	0.153E-01
OTHER1	0.162E+00	0.168E+00	0.202E+00	0.236E+00	0.225E+00	0.211E+00	0.254E+00
OTHER2	0.326E-01	0.337E-01	0.406E-01	0.473E-01	0.451E-01	0.423E-01	0.509E-01
NON-ZERO REMOVAL RATES FROM COMPARTMENTS (DAY^{-1}):							
TRABECULAR BONE SURFACE TO PLASMA	0.274E-01	0.274E-01	0.274E-01	0.274E-01	0.274E-01	0.274E-01	0.274E-01
CORTICAL BONE SURFACE TO PLASMA	0.274E-01	0.274E-01	0.274E-01	0.274E-01	0.274E-01	0.274E-01	0.274E-01
TRABECULAR BONE SURFACE TO BONE VOLUME	0.411E-02	0.411E-02	0.405E-02	0.384E-02	0.370E-02	0.356E-02	0.274E-02
CORTICAL BONE SURFACE TO BONE VOLUME	0.411E-02	0.411E-02	0.405E-02	0.384E-02	0.370E-02	0.356E-02	0.274E-02
TRABECULAR BONE VOLUME TO PLASMA	0.102E-01	0.822E-02	0.288E-02	0.181E-02	0.132E-02	0.959E-03	0.493E-03
CORTICAL BONE VOLUME TO PLASMA	0.102E-01	0.822E-02	0.288E-02	0.153E-02	0.904E-03	0.521E-03	0.821E-04
KIDNEYS TO PLASMA	0.0	0.0	0.0	0.0	0.0	0.0	0.0
KIDNEYS TO EXCRETION	0.139E+00	0.139E+00	0.139E+00	0.139E+00	0.139E+00	0.139E+00	0.139E+00
LIVER TO PLASMA	0.126E-01	0.126E-01	0.126E-01	0.126E-01	0.126E-01	0.126E-01	0.126E-01
SPLEEN TO PLASMA	0.126E-01	0.126E-01	0.126E-01	0.126E-01	0.126E-01	0.126E-01	0.126E-01
OTHER1 TO PLASMA	0.347E-01	0.347E-01	0.347E-01	0.347E-01	0.347E-01	0.347E-01	0.347E-01
OTHER2 TO PLASMA	0.301E-02	0.301E-02	0.301E-02	0.301E-02	0.301E-02	0.301E-02	0.301E-02

plasma. It is assumed that the sum of the total fraction going to skeleton (as contrasted with the unexcreted fraction listed in Table II-3) and the fraction promptly excreted is constant throughout life, which leads to a lower estimated prompt excretion fraction for younger ages.

Lead

Lead appears both as a parent and as a daughter product in the chains considered in this study. The age-dependent parameter values for the lead retention model are given in Table II-4. There is a large body of information on the physiological behavior of lead, including studies on the differences with age in the accumulation of lead in the body (for example, see Refs. 33-35). The behavior of lead in the body appears to be related to that of calcium and strontium, although there are important differences.[36-39] The early deposition pattern of lead in the skeleton may be similar to that of calcium, and lead may eventually become firmly bound somewhat like these alkaline earths in the bone matrix (cf. Refs. 36 and 38). On the other hand, newly deposited calcium or strontium may be quickly recycled to plasma, whereas newly deposited lead appears to be retained more tenaciously.[36] There is assumed to be no removal of lead from bone surfaces to plasma (via paths B* and D* in Fig. II-1).

For the adult it is assumed that 20% of the unexcreted lead in plasma is deposited on skeletal surfaces.[36] For other ages this value is scaled to the age-specific deposition fractions that have been estimated for strontium in earlier studies.[4,5] Also, the relative fractions going to cortical and trabecular surfaces at different ages are assumed to be the same as relative values previously estimated for strontium. The rate of movement of lead from bone surface to bone volume in adults is assumed to be 0.1 per day, which is a value that has been estimated for calcium and strontium.[5,12] Higher rates for children are estimated by scaling to age-specific bone mineralization rates that have been observed.[5] The age-specific removal rate from bone volume to plasma is assumed to be the same as the bone remodeling rate,[4] which has been estimated in earlier studies.[5]

TABLE II-4. AGE-DEPENDENT METABOLIC PARAMETERS FOR LEAD

	AGE (DAYS)						
	0	100	365	1825	3650	5475	>7300
FRACTION OF INGESTED ACTIVITY ABSORBED FROM SMALL INTESTINE TO PLASMA	0.640E+00	0.600E+00	0.400E+00	0.280E+00	0.320E+00	0.360E+00	0.200E+00
REMOVAL RATE FROM PLASMA TO ORGANS OR TO EXCRETION (DAY^{-1})	0.277E+01	0.277E+01	0.277E+01	0.277E+01	0.277E+01	0.277E+01	0.277E+01
FRACTION OF ACTIVITY GOING FROM PLASMA DIRECTLY TO EXCRETION	0.200E+00	0.200E+00	0.200E+00	0.200E+00	0.200E+00	0.200E+00	0.200E+00
FRACTION OF NON-EXCRETED ACTIVITY IN PLASMA GOING TO COMPARTMENT:							
TRABECULAR BONE SURFACE	0.800E-01	0.800E-01	0.500E-01	0.400E-01	0.500E-01	0.700E-01	0.800E-01
CORTICAL BONE SURFACE	0.340E+00	0.310E+00	0.210E+00	0.130E+00	0.140E+00	0.170E+00	0.500E-01
KIDNEYS	0.650E-01	0.650E-01	0.650E-01	0.650E-01	0.650E-01	0.650E-01	0.650E-01
LIVER	0.150E+00	0.150E+00	0.150E+00	0.150E+00	0.150E+00	0.150E+00	0.150E+00
SPLEEN	0.500E-02	0.500E-02	0.500E-02	0.500E-02	0.500E-02	0.500E-02	0.500E-02
OTHER1	0.330E+00	0.358E+00	0.477E+00	0.559E+00	0.541E+00	0.495E+00	0.596E+00
OTHER2	0.300E-01	0.325E-01	0.433E-01	0.508E-01	0.491E-01	0.450E-01	0.541E-01
NON-ZERO REMOVAL RATES FROM COMPARTMENTS (DAY^{-1}):							
TRABECULAR BONE SURFACE TO BONE VOLUME	0.150E+00	0.150E+00	0.148E+00	0.140E+00	0.135E+00	0.130E+00	0.100E+00
CORTICAL BONE SURFACE TO BONE VOLUME	0.150E+00	0.150E+00	0.148E+00	0.140E+00	0.135E+00	0.130E+00	0.100E+00
TRABECULAR BONE VOLUME TO PLASMA	0.102E-01	0.822E-02	0.288E-02	0.181E-02	0.132E-02	0.959E-03	0.493E-03
CORTICAL BONE VOLUME TO PLASMA	0.102E-01	0.822E-02	0.288E-02	0.153E-02	0.904E-03	0.521E-03	0.821E-04
KIDNEYS TO PLASMA	0.693E-01	0.693E-01	0.693E-01	0.693E-01	0.693E-01	0.693E-01	0.693E-01
LIVER TO PLASMA	0.0	0.0	0.0	0.0	0.0	0.0	0.0
LIVER TO EXCRETION	0.385E-02	0.385E-02	0.385E-02	0.385E-02	0.385E-02	0.385E-02	0.385E-02
SPLEEN TO PLASMA	0.385E-02	0.385E-02	0.385E-02	0.385E-02	0.385E-02	0.385E-02	0.385E-02
OTHER1 TO PLASMA	0.462E-01	0.462E-01	0.462E-01	0.462E-01	0.462E-01	0.462E-01	0.462E-01
OTHER2 TO PLASMA	0.385E-02	0.385E-02	0.385E-02	0.385E-02	0.385E-02	0.385E-02	0.385E-02

TABLE II-5. AGE-DEPENDENT METABOLIC PARAMETERS FOR POLONIUM

	AGE (DAYS)						
	0	100	365	1825	3650	5475	>7300
FRACTION OF INGESTED ACTIVITY ABSORBED FROM SMALL INTESTINE TO PLASMA	0.320E+00	0.300E+00	0.200E+00	0.140E+00	0.160E+00	0.180E+00	0.100E+00
REMOVAL RATE FROM PLASMA TO ORGANS OR TO EXCRETION (DAY^{-1})	0.277E+01	0.277E+01	0.277E+01	0.277E+01	0.277E+01	0.277E+01	0.277E+01
FRACTION OF ACTIVITY GOING FROM PLASMA DIRECTLY TO EXCRETION	0.500E-02	0.500E-02	0.500E-02	0.500E-02	0.500E-02	0.500E-02	0.500E-02
FRACTION OF NON-EXCRETED ACTIVITY IN PLASMA GOING TO COMPARTMENT:							
TRABECULAR BONE SURFACE	0.600E-01	0.600E-01	0.400E-01	0.300E-01	0.400E-01	0.500E-01	0.600E-01
CORTICAL BONE SURFACE	0.260E+00	0.240E+00	0.160E+00	0.100E+00	0.110E+00	0.130E+00	0.400E-01
KIDNEYS	0.100E+00	0.100E+00	0.100E+00	0.100E+00	0.100E+00	0.100E+00	0.100E+00
LIVER	0.100E+00	0.100E+00	0.100E+00	0.100E+00	0.100E+00	0.100E+00	0.100E+00
SPLEEN	0.100E+00	0.100E+00	0.100E+00	0.100E+00	0.100E+00	0.100E+00	0.100E+00
OTHER1	0.190E+00	0.200E+00	0.250E+00	0.285E+00	0.275E+00	0.260E+00	0.300E+00
OTHER2	0.190E+00	0.200E+00	0.250E+00	0.285E+00	0.275E+00	0.260E+00	0.300E+00
NON-ZERO REMOVAL RATES FROM COMPARTMENTS (DAY^{-1}):							
TRABECULAR BONE SURFACE TO PLASMA	0.139E+00	0.139E+00	0.139E+00	0.139E+00	0.139E+00	0.139E+00	0.139E+00
CORTICAL BONE SURFACE TO PLASMA	0.139E+00	0.139E+00	0.139E+00	0.139E+00	0.139E+00	0.139E+00	0.139E+00
TRABECULAR BONE VOLUME TO PLASMA	0.102E-01	0.822E-02	0.288E-02	0.181E-02	0.132E-02	0.959E-03	0.493E-03
CORTICAL BONE VOLUME TO PLASMA	0.102E-01	0.822E-02	0.288E-02	0.153E-02	0.904E-03	0.521E-03	0.821E-04
KIDNEYS TO PLASMA	0.139E+00	0.139E+00	0.139E+00	0.139E+00	0.139E+00	0.139E+00	0.139E+00
LIVER TO PLASMA	0.0	0.0	0.0	0.0	0.0	0.0	0.0
LIVER TO EXCRETION	0.693E+00	0.693E+00	0.693E+00	0.693E+00	0.693E+00	0.693E+00	0.693E+00
SPLEEN TO PLASMA	0.139E+00	0.139E+00	0.139E+00	0.139E+00	0.139E+00	0.139E+00	0.139E+00
OTHER1 TO PLASMA	0.139E+00	0.139E+00	0.139E+00	0.139E+00	0.139E+00	0.139E+00	0.139E+00
OTHER2 TO PLASMA	0.139E+00	0.139E+00	0.139E+00	0.139E+00	0.139E+00	0.139E+00	0.139E+00

Deposition fractions and removal rates for soft tissues have been based primarily on data and conclusions given in Refs. 36 and 40-43. Parameter values for soft tissues are assumed to be independent of age, except that the amount going to 'other tissues' was reduced for younger ages to accommodate the higher skeletal deposition fraction at those ages.

Polonium

Polonium appears both as a parent and as a daughter product in the chains considered in this study. The age-dependent parameter values for the polonium retention model are given in Table II-5. There is little age-specific information on the biological behavior of this element. It generally is not considered a bone-seeking element,[1,44,45] and in ICRP 30 it is assumed that polonium is uniformly distributed throughout the body. However, in a study in which the distribution in bone was examined in some detail,[46] it was discovered that there is some accumulation of polonium in the less mineralized portions of bone and an apparent tendency for polonium to accumulate in the organic phase of bone. This is also true of sulfur,[47] which bears some chemical and physiological resemblance to polonium.[48] It is known that sulfur is accumulated in the skeletons of young animals more than in older animals.[47] We would expect the same to be true for polonium. The fraction of polonium in plasma that goes to bone is difficult to estimate from available data. It would appear from data on animals[44,45] to be at least a few percent in adults but less than the percentage that would be assigned to the skeleton by the ICRP 30 model (14-15%). For the adult we assign 10% of the unexcreted activity in plasma to bone surfaces. Higher percentages, depending on the amount of bone growth and remodeling,[5] are assumed to deposit on the bone surfaces of children. Polonium is assumed to reach bone volume only as a daughter product born there. Its removal rate from bone volume to plasma is assumed to be the same as the bone remodeling rate.

We have based our model for polonium in soft tissues primarily on the ICRP 30 model for the adult, although residence times in organs have been reduced to allow for recycling of activity among plasma and tissues and to still produce about the same whole-body retention time as in the

ICRP 30 model. The removal rate from bone surfaces to plasma is assumed to be the same as the removal rate from soft tissues to plasma. The fraction of unexcreted activity deposited in tissues other than skeleton, kidneys, liver, and spleen is reduced in children to accommodate the higher fraction deposited in skeleton.

Bismuth

Bismuth appears only as a daughter product in the chains considered here. The age-dependent parameter values for the bismuth retention model are given in Table II-6. There is little information on the age-specific behavior of this element. Parameter values for adults were based to the extent possible on the model for bismuth presented in ICRP 30.[1] The model for soft tissues and prompt excretion were designed to yield integrated activities in kidneys, liver, spleen, other soft tissues, and whole body not too different from those in the ICRP 30 bismuth model while allowing explicit consideration of recycling of activity among organs and plasma. It is assumed that, in adults, 4% of the unexcreted activity in plasma deposits on skeletal surfaces; this is scaled upward for children in the same manner as for polonium. Bismuth is assumed to be removed from bone surfaces to plasma at the same rate as it is removed from soft tissues to plasma. It is assumed to arise in bone volume only from decay of the parent already located there and is assumed to be removed from bone volume at the rate of bone remodeling.

Thallium

Thallium appears only as a daughter product in the chains considered in this study. The age-dependent parameter values for the thallium retention model are given in Table II-7. These values are based to some extent on the ICRP 30 metabolic model for adults but also include consideration of additional data on thallium and the physiological similarity between thallium and potassium.[49]

In the adult it is assumed that 20% of the unexcreted activity in plasma is deposited on bone surfaces.[50,51] As with polonium and bismuth, the fraction going to bone surfaces is assumed to depend on growth and remodeling rates,[5] with much higher deposition at younger ages. The higher deposition in bone at younger ages is consistent with what is

TABLE II-6. AGE-DEPENDENT METABOLIC PARAMETERS FOR BISMUTH

	AGE (DAYS)						
	0	100	365	1825	3650	5475	>7300
FRACTION OF INGESTED ACTIVITY ABSORBED FROM SMALL INTESTINE TO PLASMA	0.160E+00	0.150E+00	0.100E+00	0.700E-01	0.800E-01	0.900E-01	0.500E-01
REMOVAL RATE FROM PLASMA TO ORGANS OR TO EXCRETION (DAY^{-1})	0.277E+01	0.277E+01	0.277E+01	0.277E+01	0.277E+01	0.277E+01	0.277E+01
FRACTION OF ACTIVITY GOING FROM PLASMA DIRECTLY TO EXCRETION	0.300E+00	0.300E+00	0.300E+00	0.300E+00	0.300E+00	0.300E+00	0.300E+00
FRACTION OF NON-EXCRETED ACTIVITY IN PLASMA GOING TO COMPARTMENT:							
TRABECULAR BONE SURFACE	0.240E-01	0.240E-01	0.160E-01	0.120E-01	0.160E-01	0.200E-01	0.240E-01
CORTICAL BONE SURFACE	0.100E+00	0.960E-01	0.640E-01	0.400E-01	0.440E-01	0.520E-01	0.160E-01
KIDNEYS	0.700E+00	0.700E+00	0.700E+00	0.700E+00	0.700E+00	0.700E+00	0.700E+00
LIVER	0.600E-01	0.600E-01	0.600E-01	0.600E-01	0.600E-01	0.600E-01	0.600E-01
SPLEEN	0.600E-02	0.600E-02	0.600E-02	0.600E-02	0.600E-02	0.600E-02	0.600E-02
OTHER1	0.550E-01	0.570E-01	0.770E-01	0.910E-01	0.870E-01	0.810E-01	0.970E-01
OTHER2	0.550E-01	0.570E-01	0.770E-01	0.910E-01	0.870E-01	0.810E-01	0.970E-01
NON-ZERO REMOVAL RATES FROM COMPARTMENTS (DAY^{-1}):							
TRABECULAR BONE SURFACE TO PLASMA	0.693E+00	0.693E+00	0.693E+00	0.693E+00	0.693E+00	0.693E+00	0.693E+00
CORTICAL BONE SURFACE TO PLASMA	0.693E+00	0.693E+00	0.693E+00	0.693E+00	0.693E+00	0.693E+00	0.693E+00
TRABECULAR BONE VOLUME TO PLASMA	0.102E-01	0.822E-02	0.288E-02	0.181E-02	0.132E-02	0.959E-03	0.493E-03
CORTICAL BONE VOLUME TO PLASMA	0.102E-01	0.822E-02	0.288E-02	0.153E-02	0.904E-03	0.521E-03	0.821E-04
KIDNEYS TO PLASMA	0.0	0.0	0.0	0.0	0.0	0.0	0.0
KIDNEYS TO EXCRETION	0.139E+00	0.139E+00	0.139E+00	0.139E+00	0.139E+00	0.139E+00	0.139E+00
LIVER TO PLASMA	0.0	0.0	0.0	0.0	0.0	0.0	0.0
LIVER TO EXCRETION	0.693E+00	0.693E+00	0.693E+00	0.693E+00	0.693E+00	0.693E+00	0.693E+00
SPLEEN TO PLASMA	0.693E+00	0.693E+00	0.693E+00	0.693E+00	0.693E+00	0.693E+00	0.693E+00
OTHER1 TO PLASMA	0.693E+00	0.693E+00	0.693E+00	0.693E+00	0.693E+00	0.693E+00	0.693E+00
OTHER2 TO PLASMA	0.693E+00	0.693E+00	0.693E+00	0.693E+00	0.693E+00	0.693E+00	0.693E+00

TABLE II-7. AGE-DEPENDENT METABOLIC PARAMETERS FOR THALLIUM

	AGE (DAYS)						
	0	100	365	1825	3650	5475	>7300
FRACTION OF INGESTED ACTIVITY ABSORBED FROM SMALL INTESTINE TO PLASMA	0.100E+01	0.100E+01	0.100E+01	0.100E+01	0.100E+01	0.100E+01	0.100E+01
REMOVAL RATE FROM PLASMA TO ORGANS OR TO EXCRETION (DAY^{-1})	0.693E+01	0.693E+01	0.693E+01	0.693E+01	0.693E+01	0.693E+01	0.693E+01
FRACTION OF ACTIVITY GOING FROM PLASMA DIRECTLY TO EXCRETION	0.180E-01	0.180E-01	0.180E-01	0.180E-01	0.180E-01	0.180E-01	0.180E-01
FRACTION OF NON-EXCRETED ACTIVITY IN PLASMA GOING TO COMPARTMENT:							
TRABECULAR BONE SURFACE	0.320E+00	0.300E+00	0.200E+00	0.130E+00	0.140E+00	0.180E+00	0.100E+00
CORTICAL BONE SURFACE	0.320E+00	0.300E+00	0.200E+00	0.130E+00	0.140E+00	0.180E+00	0.100E+00
KIDNEYS	0.300E-01	0.300E-01	0.300E-01	0.300E-01	0.300E-01	0.300E-01	0.300E-01
LIVER	0.300E-01	0.300E-01	0.300E-01	0.300E-01	0.300E-01	0.300E-01	0.300E-01
SPLEEN	0.500E-02	0.500E-02	0.500E-02	0.500E-02	0.500E-02	0.500E-02	0.500E-02
OTHER1	0.147E+00	0.167E+00	0.267E+00	0.337E+00	0.327E+00	0.287E+00	0.368E+00
OTHER2	0.147E+00	0.167E+00	0.267E+00	0.337E+00	0.327E+00	0.287E+00	0.368E+00
NON-ZERO REMOVAL RATES FROM COMPARTMENTS (DAY^{-1}):							
TRABECULAR BONE SURFACE TO PLASMA	0.693E+00	0.693E+00	0.693E+00	0.693E+00	0.693E+00	0.693E+00	0.693E+00
CORTICAL BONE SURFACE TO PLASMA	0.693E+00	0.693E+00	0.693E+00	0.693E+00	0.693E+00	0.693E+00	0.693E+00
TRABECULAR BONE VOLUME TO PLASMA	0.102E-01	0.822E-02	0.288E-02	0.181E-02	0.132E-02	0.959E-03	0.493E-03
CORTICAL BONE VOLUME TO PLASMA	0.102E-01	0.822E-02	0.288E-02	0.153E-02	0.904E-03	0.521E-03	0.821E-04
KIDNEYS TO PLASMA	0.347E+00	0.347E+00	0.347E+00	0.347E+00	0.347E+00	0.347E+00	0.347E+00
KIDNEYS TO EXCRETION	0.347E+00	0.347E+00	0.347E+00	0.347E+00	0.347E+00	0.347E+00	0.347E+00
LIVER TO PLASMA	0.624E+00	0.624E+00	0.624E+00	0.624E+00	0.624E+00	0.624E+00	0.624E+00
LIVER TO EXCRETION	0.693E-01	0.693E-01	0.693E-01	0.693E-01	0.693E-01	0.693E-01	0.693E-01
SPLEEN TO PLASMA	0.693E+00	0.693E+00	0.693E+00	0.693E+00	0.693E+00	0.693E+00	0.693E+00
OTHER1 TO PLASMA	0.693E+00	0.693E+00	0.693E+00	0.693E+00	0.693E+00	0.693E+00	0.693E+00
OTHER2 TO PLASMA	0.693E+00	0.693E+00	0.693E+00	0.693E+00	0.693E+00	0.693E+00	0.693E+00

known about the physiologically similar element, potassium.[52] The removal rate from bone surfaces to plasma is assumed to be the same as the total removal rate from each soft tissue compartment (0.693/day), which was chosen to produce a whole-body retention time consistent with that given in ICRP 30 despite the recycling involved in our model. The fraction deposited in 'other tissues' is adjusted at each age to accommodate the change in the fraction assumed to be deposited in the skeleton.

Thallium is assumed to reach bone volume only from the decay of its parent already residing there. It is assumed to be removed from bone volume at the rate of bone remodeling.

Radon

Two isotopes of radon occur as daughters in the chains considered in this study: Ra-222 with a half-life of 3.8 d and Ra-220 with a half-life of 55 sec. The age-dependent parameter values for the radon model are given in Table II-8.

The only parameter values assumed to vary with age in this model are the removal rates from bone surfaces to plasma. For each of these parameters, two values were determined, one for adults and one for all other ages. These values were chosen to describe the different radon-to-radium ratios that have been observed in bones of adult and neonatal beagles as a function of time after injection of Ra-226.[53] Of course, the choice of these parameter values depends on the model for radium described in Table II-2.

It is assumed in this model that all radon entering plasma leaves the body via excretion, which in this case is broadened to include exhalation. The removal rate from all soft tissues was determined as an effective half-time based on an existing multi-exponential model.[54]

Actinium and protactinium

These elements occur only as daughter isotopes in the chains in this study, namely, as Ac-228 and Pa-234m, with half-lives of 6.13 h and 1.17 min, respectively. Neither is expected to be very mobile in the body.[1] We assign the age-specific metabolic model for thorium to both isotopes. The effect is that nearly all decays of Ac-228 or Pa-234m are assigned to the point of birth of that isotope at all ages.

TABLE II-8. AGE-DEPENDENT METABOLIC PARAMETERS FOR RADON

	AGE (DAYS)						
	0	100	365	1825	3650	5475	>7300
FRACTION OF INGESTED ACTIVITY ABSORBED FROM SMALL INTESTINE TO PLASMA	0.0	0.0	0.0	0.0	0.0	0.0	0.0
REMOVAL RATE FROM PLASMA TO ORGANS OR TO EXCRETION (DAY^{-1})	0.277E+01	0.277E+01	0.277E+01	0.277E+01	0.277E+01	0.277E+01	0.277E+01
FRACTION OF ACTIVITY GOING FROM PLASMA DIRECTLY TO EXCRETION	0.100E+01	0.100E+01	0.100E+01	0.100E+01	0.100E+01	0.100E+01	0.100E+01
FRACTION OF NON-EXCRETED ACTIVITY IN PLASMA GOING TO COMPARTMENT:							
TRABECULAR BONE SURFACE	0.0	0.0	0.0	0.0	0.0	0.0	0.0
CORTICAL BONE SURFACE	0.0	0.0	0.0	0.0	0.0	0.0	0.0
KIDNEYS	0.0	0.0	0.0	0.0	0.0	0.0	0.0
LIVER	0.0	0.0	0.0	0.0	0.0	0.0	0.0
SPLEEN	0.0	0.0	0.0	0.0	0.0	0.0	0.0
OTHER1	0.0	0.0	0.0	0.0	0.0	0.0	0.0
OTHER2	0.0	0.0	0.0	0.0	0.0	0.0	0.0
NON-ZERO REMOVAL RATES FROM COMPARTMENTS (DAY^{-1}):							
TRABECULAR BONE SURFACE TO PLASMA	0.350E+02	0.350E+02	0.350E+02	0.350E+02	0.350E+02	0.350E+02	0.140E+02
CORTICAL BONE SURFACE TO PLASMA	0.350E+02	0.350E+02	0.350E+02	0.350E+02	0.350E+02	0.350E+02	0.140E+02
TRABECULAR BONE VOLUME TO PLASMA	0.360E+00	0.360E+00	0.360E+00	0.360E+00	0.360E+00	0.360E+00	0.360E+00
CORTICAL BONE VOLUME TO PLASMA	0.360E+00	0.360E+00	0.360E+00	0.360E+00	0.360E+00	0.360E+00	0.360E+00
KIDNEYS TO PLASMA	0.900E+02	0.900E+02	0.900E+02	0.900E+02	0.900E+02	0.900E+02	0.900E+02
LIVER TO PLASMA	0.900E+02	0.900E+02	0.900E+02	0.900E+02	0.900E+02	0.900E+02	0.900E+02
SPLEEN TO PLASMA	0.900E+02	0.900E+02	0.900E+02	0.900E+02	0.900E+02	0.900E+02	0.900E+02
OTHER1 TO PLASMA	0.900E+02	0.900E+02	0.900E+02	0.900E+02	0.900E+02	0.900E+02	0.900E+02
OTHER2 TO PLASMA	0.900E+02	0.900E+02	0.900E+02	0.900E+02	0.900E+02	0.900E+02	0.900E+02

Age-specific gastrointestinal absorption fractions

The GI absorption values used for the various elements in this study are included in Tables II-1 through II-8. Values for adults were taken from ICRP Publication 30. Values for infants and children were chosen to represent the general trend of relative absorption fractions as indicated by a variety of absorption studies.

Studies on laboratory animals indicate that fractional absorption of metals from the small intestine to blood is higher in neonates than in adults and may be considerably higher for poorly absorbed metals (see reviews in Refs. 55-56). These studies generally indicate that the absorption fraction decreases substantially in the first few days, weeks, or months of life, but no clear picture has been developed concerning relative absorption fractions in juvenile and adult animals.

Recent work indicates to us that the wall of the small intestine is a more selective tissue than was previously thought and that absorption of elements may be related to the body's needs to a greater extent than had been believed. In particular, there is evidence of an enhanced absorption of certain essential elements during the period of growth, and chemically related elements or elements transported by the same mechanisms may also experience enhanced absorption during this period.

Best information is for iron, lead, calcium, strontium, and zinc. Fractional absorption of each of these elements appears to be higher in juveniles than in adults. Moreover, data for each of these elements are consistent with the hypothesis that fractional absorption changes with the rate of growth until adulthood. For example, studies with human children from infancy through 4 years indicate that the absorption fraction for iron falls steadily as does the rate of growth,[57-59] and another study with children of ages 7-10 years indicates that the absorption fraction rises during that period as does the rate of growth and the demand for iron.[60]

Lead appears to share an absorption pathway with iron[61-62] and may also be absorbed to some extent along the transport system for calcium.[63] Results of a balance study of human children from 2 weeks to 8 years of age indicate that the absorption of lead is much greater than the adult level during that period.[64-65] Absorption of lead by juveniles has been

studied most extensively in the rat with isolated duodenal loops.[66-67] The animals in one study[66] weighed from 79 to 660 g and varied from recently weaned rats to rats more than one year old. The fraction of lead absorbed decreased substantially (and highly significantly) with increases in age and body weight.

The fractions of the alkaline earth metals calcium, strontium, and radium (but not barium) absorbed by juvenile rats were 2-3 times higher at age 6-8 weeks than at 60-70 weeks.[68] Another study with rats showed absorption of calcium declining from 98% in weanling rats 4 weeks old to 57, 46, 41, and 24% at ages 12-24, 48-72, and 106 weeks, respectively.[69] Data for calcium in humans are piecemeal and less definitive but appear to follow the same general pattern.[70-72] The strong age dependence in the numerous measurements of environmental Sr-90 in the skeletons of humans over three decades can be explained uniformly by a model in which the fraction of ingested Sr-90 absorbed and deposited in bone is directly related to the body's growth requirements for calcium.[5] The concentration of environmental radium in human bone as a function of age[21] appears to follow a pattern very similar to that for Sr-90.

The fraction of zinc absorbed by rats is also greater at younger ages.[73-74] In these studies it was shown that "the physiological ability to absorb zinc did not decrease with age, but rather adapted to the particular supply status"[74] and that the "marked differences between age groups in utilizing dietary zinc reflected the efficient homeostatic adjustments in absorption and endogenous excretion of zinc to the respective supply status."[73] A similar explanation might apply to the other metals.

For radiation protection it has generally been assumed that the fraction of a radionuclide absorbed by children after weaning from a milk diet is similar to that absorbed by adults (e.g., Ref. 75). This assumption does not appear to be based on strong evidence for the entire period of growth. Rather, it is apparently based on observations that the fractional absorption of many metals by laboratory animals decreases sharply toward the adult level after weaning, the conclusion that the enhanced absorption during infancy is related at least in part to the milk diet, and the fact that the structure and function of the small intestine are similar in juveniles (after weaning) and adults.[76] However,

even though the small intestine does appear to be mature in juveniles, the enhanced need during growth for essential metals such as calcium, iron, and zinc result, we believe, in enhanced absorption of these metals and perhaps also some non-essential metals such as lead or plutonium that may share absorption pathways with essential metals. There may be other mechanisms involved in conserving essential metals when the demand is high, but available data suggest to us that enhanced absorption is at least one of the homeostatic processes brought into play in the growing animal.

In view of the data discussed above, we believe that our present models should include consideration of (1) the elevated absorption fractions during the neonatal period indicated by the data for animals and to a lesser extent by that for humans; and (2) the changes with growth in absorption fractions indicated by studies with animals and by the few available studies on humans. For those radioelements with no direct information on changes with age in absorption (for example, uranium), relative values for different ages will be assigned by analogy with better understood elements. We believe that a model for strontium absorption derived for an earlier report[4] may suitably reflect the changes with age in absorption for several of the elements studied in the present report.

In this report, age-specific values for radium, uranium, and lead were derived by scaling the adult values to age-specific values estimated earlier for strontium.[4] (For example, if the value for 15-year-olds for strontium was estimated as 1.8 times the adult value, then the value for 15-year-olds for radium was assumed to be 1.8 times the adult value.) Values for absorption of thorium by neonates were based on studies on animals; other values for nonadults were based loosely on changes that have been observed for iron, since absorption of actinides has been associated with iron absorption pathways.[5,6] Absorption fractions for actinium and protactinium were assumed to be the same as those for thorium. Absorption models for actinium and protactinium are not of much importance in this study, since little activity of Ac-228 or Pa-234m would reach the GI tract under the conditions of this study. Absorption of thallium is usually assumed to be complete in the adult[1] and in this study was assumed to be complete at all ages. There was

assumed to be no absorption of radon at any age. As with actinium and protactinium, assumptions concerning absorption fractions for thallium and radon have little effect on doses estimated in this study. There is no age-specific information on absorption of polonium and bismuth; values for these two elements were scaled to changes estimated for strontium for the sake of conservatism. The absorption fraction for bismuth is not particularly important for this study, but the relative dose equivalents derived for the case of ingestion of Po-210 vary directly with the assumed absorption fraction.

REFERENCES FOR CHAPTER II

[1] International Commission on Radiological Protection, Publication 30, Limits for Intakes by Workers, Pergamon Press, Oxford, 1979.

[2] Leggett, R. W., Dunning, D. E., Jr., and Eckerman K. F., Modelling the behaviour of chains of radionuclides inside the body, Radiat. Prot. Dosim. 9, 1985, 77-91.

[3] Leggett, R. W., A model of the retention, translocation, and excretion of systemic plutonium, Health Phys. 49, 1985, 1115-1137.

[4] Cristy, M., Leggett, R. W., Dunning, D. E., Jr., and Eckerman, K. F., Age-Dependent Dose-Conversion Factors for Selected Bone-Seeking Radionuclides, U.S. Nuclear Regulatory Commission Report NUREG/CR-3535 (Oak Ridge National Laboratory Report ORNL/TM-8929), 1984.

[5] Leggett, R. W., Eckerman, K. F., and Williams, L. R., Strontium-90 in bone: a case study in age-dependent dosimetric modeling, Health Phys. 43, 1982, 307-322.

[6] Morrow, P. E., Bates, D. V., Fish, B. R., Hatch, T. F., and Mercer, T. T., Deposition and retention models for internal dosimetry of the human respiratory tract, Health Phys. 12, 1966, 173-207.

[7] Hofmann, W., Steinhausler, F., and Pohl, E., Dose calculations for the respiratory tract from inhaled natural radioactive nuclides as a function of age, I. Compartment deposition, retention, and resulting dose, Health Phys. 37, 1979, 517-532.

[8] Crawford, D. J., Identifying critical human subpopulations by age groups: radioactivity and lung, Phys. Med. Biol. 27, 1982, 539-552.

[9] Mewhinney, J. A. and Muggenburg, B. A., Comparison of retention of ^{241}Am in immature, young adult, and aged dogs and in monkeys after inhalation of $^{241}AmO_2$, in Annual Report of the Inhalation Toxicology Research Institute, 1984-1985, ed. by M. A. Medinsky and B. A. Muggenburg, Lovelace Biomedical and Environmental Research Institute, Albuquerque, NM 87185, December 1985.

[10] Eve, I. S., A review of the physiology of the gastrointestinal tract in relation to radiation doses from radioactive material, Health Phys. 12, 1966, 131-162.

[11] Crawford-Brown, D. J., An age-dependent model for the kinetics of uptake and removal of radionuclides from the GI tract, Health Phys. 44, 1983, 609-622.

[12] International Commission on Radiological Protection, Publication 20, Alkaline Earth Metabolism in Adult Man, Pergamon Press, Oxford, 1979.

[13] Stover, B. J., Atherton, D. R., Keller, N., and Buster, D. S., Metabolism of the Th-228 decay series in adult beagle dogs. 1. Th-228 (RdTh), Radiat. Res. 12, 1960, 657-671.

[14] Stover, B. J., Atherton, D. R., Buster, D. S., and Bruenger, F. W., The Th-228 decay series in adult beagles: Ra-224, Pb-212, and Bi-212 in selected bones and soft tissues, Radiat. Res. 26, 1965, 132-145.

[15] Maletskos, C. J., Keane, A. T., Telles, N. C., and Evans, R. D., Retention and absorption of Ra-224 and Th-234 and some dosimetric consequences of Ra-224 in human beings, in Delayed Effects of Bone Seeking Radionuclides, ed. by C. W. Mays, University of Utah Press, Salt Lake City, 1969, 29-49.

[16] Wrenn, M. E., Singh, N. P., Cohen, N., Ibrahim, S. A., and Saccomanno, G., Thorium in Human Tissues, New York University Medical Center, NUREG/CR-1227, 1980.

[17] Singh, N. P., Wrenn, M. E., and Ibrahim, S. A., Plutonium concentration in human tissues: comparison to thorium, Health Phys. 44, Supplement No. 1, 1983, 469-476.

[18] Jee, W. S. S., Arnold, J. S., Cochran, T. H., Twente, J. A., and Mical, R. S., Relationship of microdistribution of alpha particles to damage, in Some Aspects of Internal Irradiation, ed. by T. F. Dougherty, W. S. S. Jee, C. W. Mays, and B. J. Stover, Pergamon Press, Oxford, 1962, 27-45.

[19] Leggett, R. W. and Crawford-Brown, D. J., The role of age in human susceptibility to radiation, Sci. Prog., Oxford 68, 1983, 227-258.

[20] Schlenker, R. A., Keane, A. T., and Holtzman, R. B., The retention of Ra-226 in human soft tissue and bone; implications for the ICRP 20 alkaline earth model, Health Phys. 42, 1982, 671-693.

[21] Muth, H. and Gloebel, B., Age dependent concentration of Ra-226 in human bone and some transfer factors from diet to human tissues, Health Phys. 44, 1983, 113-121.

[22] Bruenger, F. W., Smith, J. M., Atherton, D. R., Jee, W. S. S., Lloyd, R. D., and Stevens, W., Skeletal retention and distribution of Ra-226 and Pu-239 in beagles injected at ages ranging from 2 days to 5 years, Health Phys. 44, 1983, 513-527.

[23] Parks, N. J., Pool, R. R., Williams, J. R., and Wolf, H. G., Age and dosage-level dependence of radium retention in beagles, Radiat. Res. 75, 1978, 617-632.

[24] Hursh, J. B. and Lovaas, A., The biliary excretion of radium, Health Phys. 6, 1961, 183-188.

[25] Hursh, J. B., Lovaas, A., Piccirilli, A., and Putnam, T. E., Urinary excretion of radium in dogs, Am. J. Physiol. 199, 1960, 513-516.

[26] Bernard, S. R., Muir, J. R., and Royster, G. W., The distribution and excretion of uranium in man, Proceedings of the Health Physics Society, First Annual Meeting, June 25-27, 1957, 33-48.

[27] Wrenn, M. E., Durbin, P. W., Howard, B., Lipsztein, J., Rundo, J., Still, E. T., and Willis, D. L., Metabolism of ingested U and Ra, Health Phys. 48, 1985, 601-633.

[28] Durbin, P. W. and Wrenn, M. E., Metabolism and effects of uranium in animals, in Conference on Occupational Health; Experience with Uranium, Arlington, Va. (April 28-30, 1975), ERDA 93, 1976, 67-129.

[29] Hursh, J. B. and Spoor, N. L., Data on man, in Handbook Exptl. Pharmacol. 36 (Uranium, Plutonium, Transplutonic Elements), ed. by H. C. Hodge, J. N. Stannard and J. B. Hursh, Springer-Verlag, New York, 1975, 197-240.

[30] Stevens, W., Bruenger, F. W., Atherton, D. R., Smith, J. M., and Taylor, G. N., The distribution and retention of hexavalent U-233 in the beagle, in Actinides in Man and Animals, Proceedings of the Snowbird Workshop, ed. M. E. Wrenn, 1979, 457-472.

[31] Rowland, R. E. and Farnham, J. E., The deposition of uranium in bone, Health Phys. 17, 1969, 139-144.

[32] Neuman, W. F. and Neuman, M. W., The Chemical Dynamics of Bone Mineral, Univ. of Chicago Press, 1958.

[33] Reviews of the Environmental Effects of Pollutants: VII. Lead, EPA-600/1-78-029, US Environmental Protection Agency Health Effects Research Laboratory, Cincinnati, Ohio, 1978.

[34] Proceedings of the International Symposium on the Environmental Health Aspects of Lead, Amsterdam, October 2-6, 1972, published by the Commission of the European Communities, Luxemborg, 1973.

[35] Ratcliffe, J. M., Lead in Man and the Environment, Ellis Horwood Limited, West Sussex, England, 1981.

[36] Heard, M. J. and Chamberlain, A. C., Uptake of Pb by human skeleton and comparative metabolism of Pb and alkaline earth elements, Health Phys. 47, 1984, 857-865.

[37] Pounds, J. G., Wright, R., Morrison, D., and Casciano, D. A., Effect of lead on calcium homeostasis in the isolated rat hepatocyte, Toxicol. Appl. Pharmacol. 63, 1982, 389-401.

[38] Rosen, J. F., The metabolism of lead in isolated bone cell populations: interactions between lead and calcium, Toxicol. Appl. Pharmacol. 71, 1983, 101-112.

[39] Hursh, J. B., Retention of Pb-210 in beagle dogs, Health Phys. 25, 1973, 29-35.

[40] Willes, R. F., Lok, E., and Truelove, J. F., Retention and tissue distribution of $^{210}Pb(NO_3)_2$ administered orally to infant and adult monkeys, Toxicol. Environ. Health 3, 1977, 395-406.

[41] Rabinowitz, M. B., Wetherill, G. W., and Kopple, J. D., Kinetic analysis of lead metabolism in healthy humans, J. Clin. Inv. 58, 1976, 260-270.

[42] Lloyd, R. D., Mays, C. W., Atherton, D. R., and Bruenger, F. W., Pb-210 studies in beagles, Health Phys. 28, 1975, 575-583.

[43] Gross, S. B., Pfitzer, E. A., Yeager, D. W., and Kehoe, R. A., Lead in human tissues, Toxicol. Appl. Pharmacol. 32, 1975, 638-651.

[44] Stannard, J. N. and Casarett, G. W. (editors), Metabolism and Biological Effects of an Alpha Particle Emitter, Polonium-210, pp. 49-204, Radiat. Res., Supplement 5, 1964.

[45] Fink, R. M. (editor), Biological Studies with Polonium, Radium, and Plutonium, pp. 3-156, McGraw-Hill, New York, 1950.

[46] Soremark, R. and Hunt, V., Autoradiographic studies of the distribution of Po-210 in mice after a single intravenous injection, Int. J. Rad. Biol. 11, 1966, 43-50.

[47] Dziewiatkowski, D. D., Sulfur, pp. 175-220 in Mineral Metabolism 2, Part B, ed. by C. L. Comar and F. Bronner, Academic Press, New York, 1962.

[48] Yermolayeva-Makovskaya, A. P., Pertsov, L. A., and Popov, D. K., Polonium-210 in the human body and in the environment, USSR Reports on Natural and Fallout Radioactivity, February 1, 1969 (AEC-TR-7030).

[49] Gehring, P. J. and Hammond, P. B., The interrelationship between thallium and potassium in animals, J. Pharm. exp. Ther. 155, 1967, 187-201.

[50] Barclay, R. K., Peacock, W. C., and Karnofsky, D. A., Distribution and excretion of radioactive thallium in the chick embryo, rat, and man, J. Pharm. exp. Ther. 107, 1953, 178-187.

[51] Lie, R., Thomas, R. G., and Scott, J. K., The distribution and excretion of thallium-204 in the rat, with suggested MPC's and a bio-assay procedure, Health Phys. 2, 1960, 334-340.

[52] Triffitt, J. T., Terepka, A. R., and Neuman, W. F., A comparative study of the exhange in vivo of major constituents of bone mineral, Calc. Tiss. Res. 2, 1968, 165-176.

[53] Lloyd, R. D., Bruenger, F. W., Mays, C. W., and Jones, C. W., Skeletal radon-to-radium ratios in neonatal, juvenile, and mature beagles and in adult St. Bernards, Health Phys. 44, 1983, 61-63.

[54] Bernard, S. R. and Snyder, W. S., Metabolic models for estimation of internal radiation exposure received by human subjects from the inhalation of noble gases, Health Physics Division Annual Progress Report, Period Ending June 20, 1975, Oak Ridge National Laboratory Report ORNL-5046, 1975.

[55] Harrison, J. D., Gut uptake factors for plutonium, americium, and curium, National Radiological Protection Board Report NRPB-R129, 1982.

[56] Cristy, M. and Leggett, R. W., Determination of Metabolic Data Appropriate for HLW Dosimetry. II. Gastrointestinal Absorption, U.S. Nuclear Regulatory Commission Report NUREG/CR-3572 Vol. II (Oak Ridge National Laboratory Report ORNL/TM-8939/V2), February 1986.

[57] Garby, L. and Sjolin, S., Absorption of labelled iron in infants less than three months old, Acta Paediat. 48 (Suppl.), 1959, 24-28.

[58] Schulz, J. and Smith, N. J., A quantitative study of the absorption of food iron in infants and children, J. Dis. Child. 95, 1958, 109-119.

[59] Gorten, M. K., Hepner, R., and Workman, J. B., Iron metabolism in premature infants. I. Absorption and utilization of iron as measured by isotope studies, J. Pediat. 63, 1963, 1063-1071.

[60] Darby, W. J., Hahn, P. F., Kaser, M. M., Steinkamp, R. C., Densen, P. M., and Cook, M. B., The absorption of radioactive iron by children 7-10 years of age, J. Nutr. 33, 1947, 107-119.

[61] Barton, J. C., Conrad, M. E., Nuby, S., and Harrison, L., Effects of iron on the absorption and retention of lead, J. Lab. Clin. Med., 92, 1978, 536-547.

[62] Barton, J. C., Conrad, M. E., and Holland, R., Iron, lead, and cobalt absorption: similarities and dissimilarities, Proc. Soc. Exp. Biol. Med., 166, 1981, 64-69.

[63] Task Group on Metal Accumulation, Accumulation of toxic metals with special reference to their absorption, excretion, and biological half-times, Environ. Physiol. Biochem. 3, 1973, 65-107.

[64] Ziegler, E. E., Edwards, B. B., Jensen, R. L., Mahaffey, K. R., and Fomon, S. J., Absorption and retention of lead by infants, Pediat. Res. 12, 1978, 29-34.

[65] Alexander, F. W., Clayton, B. E., and Delves, H. T., Mineral and trace-metal balances in children receiving normal and synthetic diets, Q. J. Med. 43, 1974, 89-111.

[66] Conrad, M. E. and Barton, J. C., Factors affecting the absorption and excretion of lead in the rat, Gastroenterology 74, 1978, 731-740.

[67] Barton, J. C., Active transport of lead-210 by everted segments of rat duodenum, Am. J. Physiol. 247, 1984, G193-G198.

[68] Taylor, D. M., Bligh, P. H., and Duggan, M. H., The absorption of calcium, strontium, barium, and radium from the gastrointestinal tract of the rat, Biochem. J. 83, 1962, 25-29.

[69] Hansard, S. L., and Crowder, H. M., The physiological behavior of calcium in the rat, J. Nutr. 62, 1957, 325-339.

[70] Harrison, H. E., Factors influencing calcium absorption, Fed. Proc. 18, 1959, 1085-1092.

[71] Kahn, B., Straub, C. P., Robbins, P. J., Wellman, H. N., Seltzer, R. A., and Telles, N. C., Retention of radiostrontium, strontium, calcium, and phosphorus by infants, Pediatrics 43 (Suppl.), 1969, 651-756.

[72] International Commission on Radiological Protection (ICRP), Report of the Task Group on Reference Man, ICRP Publication 23, Pergamon Press, Oxford, 1975, 375-376.

[73] Weigand, E. and Kirchgessner, M., Change in apparent and true absorption and retention of dietary zinc with age in rats, Biol. Trace Element Res., 1, 1979, 347-358.

[74] Kirchgessner, M., Weigand, E., and Schwarz, F. J., Absorption of zinc and manganese in relation to age, in Trace Element Metabolism in Man and Animals, ed. by J. M. Gawthorne, J. Howell, and C. L. White, Springer, New York, 1981, 125-128.

[75] National Radiological Protection Board (NRPB), Metabolic and Dosimetric Models for Application to Members of the Public. Recommended Models for the Metabolism of Iodine and Values for the Gut Transfer Fraction of Plutonium, Americium, Curium, and Neptunium, NRPB Rep. NRPB-GS3, 1984.

[76] Koldovsky, O., Development of the functions of the small intestine in mammals and man, S. Karger, Basel, 1969.

CHAPTER III. IMPLEMENTATION OF AGE-DEPENDENT DOSIMETRIC METHODS

This chapter describes the methods and computer code (together referred to as the AGEDOS methodology) used to estimate 50-year committed dose equivalents, as a function of age at exposure, to radiosensitive organs and tissues in the human body. Much of this chapter is taken from the original document describing the AGEDOS code[1] and from NUREG/CR-3535.[2]

DEFINITIONS AND BACKGROUND INFORMATION

Radioactive materials may be taken into the body through inhalation, ingestion, contact with open wounds, or injection directly into blood or tissue. Whatever the pathway, internally deposited radionuclides are distributed among various organs and tissues and/or excreted from the body through a variety of complex processes. During its sojourn in the body, a radionuclide may release energy during radioactive decay. If this energy is deposited in sensitive cells or tissues, damage may occur and may eventually contribute to a deleterious biological effect such as carcinogenesis or mutagenesis.

The index commonly used to estimate the potential for a given health effect due to exposure to radiation is the absorbed dose, which is defined as the ratio of the energy, $\Delta\varepsilon$, deposited in a specified tissue, to the mass, Δm, of that tissue. The AGEDOS methodology is designed to estimate dose per unit time (dose rate) as well as integrated dose to various radiosensitive organs and tissues at specified times after the beginning of internal exposure to a radionuclide. As described later, the integrated doses estimated by AGEDOS are combined with appropriate quality factors (reflecting the relative biological damage of high-LET and low-LET radiations) to calculate a 'committed dose equivalent' as defined in ICRP Publications 26 and 30.

The dose quantities estimated using the AGEDOS code reflect the anatomic, metabolic, and physiological changes that may occur due to the growth process during or after exposure to a radionuclide. For example, in the case of ingestion of a radionuclide one may consider variation

with age in the fraction of activity absorbed into the bloodstream from the small intestine, the fraction taken from the bloodstream by various systemic organs, and the biological half-times of the radionuclide in various compartments of these organs, among other factors. Moreover, the calculations account for the differences with age in the amounts of energy deposited in various organs and tissues due to radioactive decay at a given location. Such differences will arise from the changes during growth in the masses and geometries of body organs and tissues.

THE MATRIX OF DOSE RATES CALCULATED BY AGEDOS

The notation $\dot{D}_I(b,b + T)$ is used for the dose rate to a specified tissue of a person of age b + T due to an intake I either occurring at, or beginning at, age b. If the intake I is an acute unit intake occurring at age b, then the notation will be $\dot{D}_U(b,b + T)$. If the intake I is a chronic intake beginning at age b, then I is a function of the time t and the exposed person's age between t = 0 (corresponding to age b) and t = T (corresponding to age b + T).

The primary task of the computer code AGEDOS is to calculate a matrix of dose rates $\dot{D}_U(B,B + S)$ for an acute unit intake U, for selected beginning ages B, and for selected times $S \geq 0$ (see Table III-1). This matrix may also be used to estimate dose rates $\dot{D}_I(b,b + T)$ for essentially arbitrary intake I, beginning age b, and subsequent age b + T. In the present document only acute intakes and averages of acute intakes approximating uniform one-year intakes at various ages are considered. As indicated in Chapter II, values presented in this document are relative committed dose equivalents (that is, relative to the committed dose equivalent resulting from exposure as an adult) due to such intakes. The committed dose equivalent is the total dose equivalent which the individual will receive in a fifty-year period following the intake. For an acute unit intake U, for example, the committed dose equivalent is given as

$$H(50,b)_T = \int_0^{50} \dot{D}_U(b,b+s)_T ds,$$

where $H(50,b)_T$ is the committed dose equivalent to organ T per unit activity deposited in the body at age b.

Table III-1. The matrix of dose rates to a specified tissue illustrative of the matrix calculated by AGEDOS.[a]

$\dot{D}_U(0, 0)$[b]	$\dot{D}_U(100, 0)$	$\dot{D}_U(365, 0)$	$\dot{D}_U(1825, 0)$	$\dot{D}_U(3650, 0)$	$\dot{D}_U(5475, 0)$	$\dot{D}_U(7300, 0)$
$\dot{D}_U(0, 0.01)$	$\dot{D}_U(100, 0.01)$	$\dot{D}_U(365, 0.01)$	$\dot{D}_U(1825, 0.01)$	$\dot{D}_U(3650, 0.01)$	$\dot{D}_U(5475, 0.01)$	$\dot{D}_U(7300, 0.01)$
$\dot{D}_U(0, 0.1)$	$\dot{D}_U(100, 0.1)$	$\dot{D}_U(365, 0.1)$	$\dot{D}_U(1825, 0.1)$	$\dot{D}_U(3650, 0.1)$	⋮	⋮
$\dot{D}_U(0, 1.0)$	$\dot{D}_U(100, 1.0)$	$\dot{D}_U(365, 1.0)$	$\dot{D}_U(1825, 1.0)$	⋮		
$\dot{D}_U(0, 10.0)$	$\dot{D}_U(100, 10.0)$	$\dot{D}_U(365, 10.0)$	⋮			
$\dot{D}_U(0, 100.0)$	$\dot{D}_U(100, 100.0)$	⋮				
$\dot{D}_U(0, 365.0)$	⋮					
$\dot{D}_U(0, 730.0)$						
⋮						
$\dot{D}_U(0, 7300.0)$						
⋮						
$\dot{D}_U(0, T_{end})$						

[a]The matrix actually generated by AGEDOS is based on a much finer time grid than is illustrated here.

[b]Each value $\dot{D}_U(B,S)$ is the dose rate at time S (age B + S) following an acute unit intake U at time 0 (age B).

In the AGEDOS code, the "acute unit intake" U is actually represented as an initial activity already in either the stomach or the lungs. In order to allow development of a dosimetric data base with maximum flexibility, the code was designed to estimate dose rates to all organs beginning with an initial unit activity in either the tracheobronchial, nasal-pharyngeal, or pulmonary region of the lungs, with no initial activity in the other two regions. The user of the data base could then perform arithmetic operations to compute dose rates corresponding to arbitrary deposition fractions in the three regions. However, the user of the AGEDOS code has the option of specifying arbitrary initial activities in each region of the lung. The data presented here for the inhalation exposure corresponds to the inhalation of an aerosol with an activity median aerodynamic diameter of 0.3, 1.0, or 5.0 μm.

The beginning ages B (that is, ages at which acute intakes are considered) used in AGEDOS are 0, 100, 365, 1825, 3650, 5475, and 7300 days. Thus, to choose one example, dose rates to the various organs are calculated at ages subsequent to age 1825 days under the assumption that a unit acute intake occurred at age 1825 days (only). The set of beginning ages is somewhat arbitrary but is designed with the intent that no period of rapid anatomic, metabolic, and/or physiological changes be completely ignored.

The set of times T following the acute intake at which dose rates are to be calculated will be referred to as the "time grid system." The time grid system should include relatively densely spaced times shortly after exposure to properly describe the rapid changes in dose rates that may occur in some organs immediately following an acute intake. At relatively long times after the acute intake, the times in the time grid system may become more widely spaced. However, one must keep in mind for general applications of AGEDOS output that information concerning dose rates due to arbitrary intake patterns will be inferred from the dose rates that are estimated assuming acute intakes. Hence it is essential to obtain as accurate a description as possible of the dose rate curve for an acute intake.

Of course, the desire for accuracy must be balanced somewhat with considerations of computing time and storage requirements. The optimal time grid system varies somewhat with the radionuclide and with the particular metabolic models used. In the present study we used the following time grid system for all cases: 0.1 days from time zero to 10 days after exposure, 1.0 days from 10 days to 73 days after exposure, 73 days from 73 days to 1825 days after exposure, and 365 days thereafter.

THE GENERAL SCHEME FOR ESTIMATING THE DISTRIBUTION OF ACTIVITY OF RADIONUCLIDES IN THE BODY

Activity entering the body by ingestion is assumed to originate in the stomach compartment. Thus, if it is assumed that a unit activity of a radionuclide is taken in by acute ingestion, this unit activity is placed in the stomach at time zero. From the stomach the activity is viewed as passing in series through the small intestine, the upper large intestine, and the lower large intestine, from which it may be excreted. Activity reaching the small intestine may also be absorbed through the wall of the small intestine into the bloodstream, from which it may be taken into the skeleton, liver, kidney, spleen, and other tissues.

Activity entering the body through inhalation is assumed to originate in any of three compartments of the lung, namely, the tracheobronchial (TB) region, the pulmonary (P) region, or the nasal-pharyngeal (NP) region. The amount assumed to originate in each of these compartments depends on the assumed particle size. According to the ICRP Task Group Lung Model,[3] if a unit activity of a radionuclide with activity median aerodynamic diameter (AMAD) of 1.0 μm is inhaled, 30% goes to region NP, 8% to TB, 25% to P, and the rest is exhaled. If the AMAD is 0.3 μm, 8.8% goes to NP, 8% to TB, 43% to P, and the rest is exhaled. For an AMAD of 5.0 μm, 74% is placed in NP, 8% in TB, 8.8% in P, and the rest is exhaled. Activity in the lungs may reach the bloodstream directly, or it may enter blood indirectly through the stomach or lymphatic system.

In all calculations performed with AGEDOS, it is assumed that only the first nuclide in a chain of radioactive species is taken into the body. The formation and dynamics within the body of daughters in the chain are considered explicitly, however.

Throughout, $A_{iq}(t)$ denotes the activity of the ith species of the chain in a compartment indexed by subscript q. If we consider $A_{iq}(t)$ over an interval of time that is small enough for changes with age to be neglected, the rate of change of $A_{iq}(t)$ with time may be modeled by a system of differential equations of the form

$$\dot{A}_{ik} = -(\lambda_i^R + \lambda_{ik}^B)\, A_{ik} + c_{ik}\, (\lambda_i^R \sum_{j=1}^{i-1} B_{ij} \sum_{r=1}^{L_j} A_{jr} + p_i) \quad , \tag{1}$$

$$k = 1, \ldots, L_i \ ,$$

where compartment q is assumed to have L_i separate pools of activity, and where

A_{ik} = activity of species i in the kth pool,

$\lambda_i^R = (\ln 2)/T_i^R$ = radioactive decay coefficient (time^{-1}) of species i (T_i^R is the radioactive half-life of species i),

λ_{ik}^B = rate coefficient (time^{-1}) for biological removal of species i from the kth pool,

L_j = number of exponential terms in the retention function for species j,

B_{ij} = branching ratio of the nuclide j to species i,

p_i = inflow rate of ith species into the compartment.

The subsystem described by these L_i equations can be interpreted as a biological compartment in which the fractional retention of species i is governed by the function

$$R_i(t) = \sum_{k=1}^{L_i} c_{ik} \exp[-(\lambda_i^R + \lambda_{ik}^B)(t)] \ .$$

The subscript k in Eq. (1) represents the kth term of the retention function, and the coefficients c_{ik} can be thought of as 'pathway fractions,' that is, the fractions associated with the various pools of activity within the compartment. In the model represented schematically in Fig. II-1, outflow from each compartment during each time interval

generally is represented as a single exponential term, so that each compartment is considered as representing a single pool of activity. An exception is made in a few cases for 'other tissues', whose retention is sometimes represented as a sum of two exponential terms. In many other applications (for example, when the ICRP 30 retention models are used), retention functions often involve multiple exponential terms. For the retention models used in this report, the 'pathway fractions' usually have a clear anatomical and/or physiological definition. Whenever a retention function for a compartment involves multiple exponential terms, however, it is usually difficult to determine the physical meaning of the 'pathway fractions.'

An obvious problem in using Eq. (1) as a model of the rate of change of activity of a radionuclide in a compartment is that the inflow rate, p_i, of species i will not remain constant with time. Moreover, since changes with age in the uptake and retention of radionuclides by a compartment are being considered, it cannot be assumed that the biological removal rates, λ^B_{ik}, and pathway fractions, c_{ik}, remain constant over an extended period.

These problems are handled by dividing the time interval over which dose rates are to be considered into relatively small subintervals over which all parameters in Eq. (1) may be treated as constant. As discussed earlier, the lengths of these subintervals usually vary from a fraction of a day at times close to the initial acute intake of the radionuclide to one year at times very remote from intake. The problem is essentially that of approximating a continuous function by a step function; this requires shorter steps over intervals of rapid change than over intervals of little change. At times close to an acute intake, a close approximation of the inflow rate into some compartments may require steps that are only a small fraction of a day.

The inflow rate p_i on each subinterval is taken to be that constant inflow rate which would yield the total activity of the radionuclide which flows out of the feeding compartments during the same subinterval. (Of course, if a portion of the outflow from the feeding compartments proceeds along another pathway, that portion is not included in the calculation of p_i.) For example, the inflow rate p_i to the small intestine

from the stomach during a subinterval of length 0.1 days is taken to be $\lambda_s\tilde{A}_s/0.1$, where λ_s is the outflow rate coefficient (day^{-1}) from the stomach to the small intestine, and $\tilde{A}_s$ is the integrated activity of the radionuclide in the stomach during the same time interval.

The values of biological half-times and pathway fractions used on each subinterval are determined by linear interpolation of the values input for ages 0, 100, 365, 1825, 3650, 5475, and 7300 days. For example, if the calculation is for a person of age 500 days at the beginning of the subinterval, then the half-times and pathway fractions used on that subinterval are determined by linear interpolation from the values input for ages 365 days and 1825 days.

CONVERTING FROM ACTIVITY TO DOSE RATES

In the preceding section we discussed a general scheme for estimating the distribution of activity in the body as a function of time after intake of a radionuclide. The activity of a radionuclide in a compartment is a measure of the energy being emitted in that compartment at time t. In this section we discuss how one may relate the estimated activities of a radionuclide in all compartments at time t to the dose rate to a specific organ at time t. The problem is to estimate the fraction of the energy emitted by decay of the radionuclide in each compartment ("source organ") that is absorbed by the specified ("target") organ. This absorbed fraction is incorporated into the calculation through the use of dosimetric S-factors.[4,5] The S-factor $S(X \leftarrow Y)$ is defined for our use as the average dose rate to target organ X from one unit of activity of the radionuclide uniformly distributed in source organ (or compartment) Y. The units for S-factors depend on the units used for activity and time; thus the S-factor units may be rad/μCi-day or Gy/Bq-s, for example.

The dose rate $[DR_i(X)](t)$ to target organ X at time t due to radionuclide species i in source organs $Y_1, Y_2, \ldots, Y_M$ is estimated to be

$$[DR_i(X)](t) = \sum_{k=1}^{M} [DR_i(X \leftarrow Y_k)](t) ,$$

where

$$[DR_i(X \leftarrow Y_k)](t) = S_i(X \leftarrow Y_k)A_{ik}(t) \ .$$

In the preceding equation $A_{ik}(t)$ is the activity, at time t, of species i in source organ Y_k.

The dose rate to target organ X from a unit activity of a nuclide in source organ Y due to emissions of type m may be calculated from the expression

$$S_m(X \leftarrow Y) = c \sum f_m E_m \Phi_m(X \leftarrow Y) \ ,$$

where

c = a constant that depends on the units of dose, energy, mass, and time being used,

f_m = intensity of decay event (number per disintegrations),

E_m = average energy of decay event (MeV),

$\Phi_m(X \leftarrow Y)$ = specific absorbed fraction = fraction of emitted energy from source organ Y absorbed by target organ X per unit mass of X,

and where the summation is taken over all events of type m. In the following paragraphs we discuss briefly the estimation of the absorbed fractions $\Phi_m(X \leftarrow Y)$ for photon emissions and beta, electron, and alpha decays. More complete descriptions can be found in Refs. 4 and 5.

The S-factor is similar in concept to the SEE factor (specific effective energy) used by ICRP Committee 2 in their recent Publication 30. The SEE factor includes a quality factor for the radiation emitted during the transformation. The S-factor as used in the AGEDOS analysis does not include consideration of the quality factor, but AGEDOS tabulates absorbed dose separately for low- and high-LET radiation. In this report the appropriate quality factors are included when the low- and high-LET doses calculated by AGEDOS are combined to give the 50-year committed dose equivalents tabulated in Chapter IV. The two quantities are related as

$$SEE_m(X \leftarrow Y) = k \sum Q_m S_m(X \leftarrow Y)$$

where

Q_m = the appropriate quality factor for the mth radiation type

k = a constant that depends on the units used in the S-factor and SEE factor.

It should be evident that the value $S_m(X \leftarrow Y)$ is a function of the age of the individual, because the specific absorbed fraction $\Phi_m(X \leftarrow Y)$ used to calculate $S_m(X \leftarrow Y)$ may depend on the relative geometries of X and Y as well as the mass of the target organ X.[6] We shall first discuss the determination of S-factors for various radiation types for a fixed age, and we later describe the introduction of age dependence into the S-factors.

Photon emissions

There are two principal computational procedures available for estimating specific absorbed fractions for photon emissions: the Monte Carlo method[4] and the point-source kernel method.[7] Each of these will be discussed briefly.

The Monte Carlo method is a computerized approach for estimating the probability of a photon interaction within target organ X after emission from source organ Y. This method is carried out as follows[4] for all combinations of source and target organs and for several (usually 12) photon energies. The body is represented by an idealized phantom in which the internal organs are assigned masses, shapes, positions, and attenuation coefficients based on their chemical composition. A mass attenuation coefficient μ_o is chosen, where μ_o is greater than or equal to the mass attenuation coefficients for any region of the body. The photon begins its course from organ Y in a randomly chosen direction, and a potential site of an interaction is chosen by taking the distance traveled as $-\ln r/\mu_o$, where r is a random number distributed between 0 and 1. The point on the line at this distance from the photon's starting point and in the direction of the photon's path is tested to determine the region of the body containing this point. The computer randomly selects either a favorable or an unfavorable outcome; the probability of a favorable outcome is μ_i/μ_o, where μ_i is the total mass attenuation coefficient for the ith region. If the outcome is

unfavorable, then it is assumed that no interaction occurs, and the photon proceeds another randomly chosen distance along the same line of flight and the game is repeated. If the outcome is favorable, then it is assumed that an interaction occurs. With each interaction, an artificial "weight" of the photon (initially set at unity) is reduced by an amount equal to the expectation of absorption which the photon would have in the actual physical processes. The flight of the photon is terminated (1) if it escapes the body; (2) if its energy falls below a cutoff value -- typically 4 keV; or (3) if its weight falls below 10^{-5}; in the latter two cases, the energy is considered to be totally absorbed. The energy deposition for an interaction is determined according to a standard equation.[4]

The second procedure for estimating specific absorbed fractions for photon emissions involves integration of a point-source kernel $\Phi(x)$, where x is the distance from the point source. The function Φ is composed of inverse-square and exponential attenuation factors that reflect the loss of energy from photon interactions and a build-up factor that reflects the contribution of scattered photons to dose:[7]

$$\Phi(x) = \mu_{en}/\rho \cdot 1/(4\pi x^2) \cdot e^{-\mu x} \cdot B_{en}(\mu x) ,$$

where

$\Phi(x)$ = the point-isotropic specific absorbed fraction,

μ_{en} = the linear energy-absorption coefficient,

μ = the linear attenuation coefficient,

ρ = the density of the medium,

x = the distance from the source,

$B_{en}(\mu x)$ = the energy-absorption build-up factor.

One must integrate this kernel over all distances $x = |u - v|$ corresponding to pairs of points (u,v), where u lies in the source organ Y and v lies in the target organ X.

Both the Monte Carlo method and the point-kernel method may involve significant sources of error, depending on the energy and the organs under consideration.[8] The Monte Carlo method is a probabilistic approach and produces significant errors in situations where few interactions are

expected to occur, such as cases involving target organs which are relatively small or remote from important sources of activity. The point-source kernel method technically is valid only for a homogeneous, unbounded medium. Hence this method may lead to large errors in cases involving significant variations in composition or density of body tissue, or in cases where target organs or important sources of activity lie near a boundary of the body. Cristy[9] has been able to reduce errors in calculations of absorbed fractions by making extensive use of the geometrical reciprocity theorem and by developing correction factors for values generated by the point-kernel method. That is, he uses a weighted average of $\Phi_m(X \leftarrow Y)$ and the reciprocal $\Phi_m(Y \leftarrow X)$ produced by the Monte Carlo method, but replaces this value with the corrected point-kernel value if the former is statistically unreliable.

Beta and electron decay

Beta particles and discrete electrons are usually not sufficiently energetic to contribute significantly to cross-irradiation doses of targets separated from a source organ. Thus, it is generally assumed that $\Phi_m(X \leftarrow X)$ is just the inverse of the mass of organ X, and if source and target are separated, $\Phi_m(X \leftarrow Y) = 0$. Exceptions occur when the source and target are in close proximity, which is the case, for example, with various skeletal tissues. Absorbed fractions for cross irradiations among skeletal tissues and walled organs were taken from ICRP 30.[10]

Alpha particle decay

The energy of alpha particles and their associated recoil nuclei is generally assumed to be absorbed in the source organ. Therefore, $\Phi_\alpha(X \leftarrow X)$ is taken to be the inverse of the organ mass, and $\Phi_\alpha(X \leftarrow Y) = 0$ if X and Y are separated. Special calculations are performed for active marrow and endosteal cells in bone, based on a method of Thorne.[11]

Calculation of S-factors for different age groups

For non-penetrating radiations the calculation of age-dependent specific absorbed fractions (and hence of S-factors) is straightforward.

Since all emitted energy is assumed to be absorbed by the source organ, the only age-dependent variable in this case is the mass of the organ.

The problem is considerably more complex for penetrating radiations, however, because the changing shapes and relative positions of the organs must be taken into account in this case in the development of specific absorbed fractions. Specific absorbed fractions for photon emissions of various energies have been calculated by Cristy and Eckerman[9] for age groups 0, 1, 5, 10, and 15 years. These absorbed fractions were calculated using a combination of the Monte Carlo and point-source kernel methods as described earlier, but using different mathematical phantoms of the human body for each age group. An external view of these mathematically represented phantoms, together with comparative cross-sections of the middle trunk regions of the newborn and adult phantoms, are shown in Fig. III-1.[12] Results of Cristy and Eckerman[9] indicate that the specific absorbed fractions vary substantially with age for some energies, source organs, and target organs (see Fig. III-2).

Specific absorbed fractions for adults (age 20 years) are taken from Ref. 4. To avoid discontinuities in calculated doses, S-factors for any non-adult age are calculated from those for ages 0, 1, 5, 10, 15, and 20 years by linear interpolation.

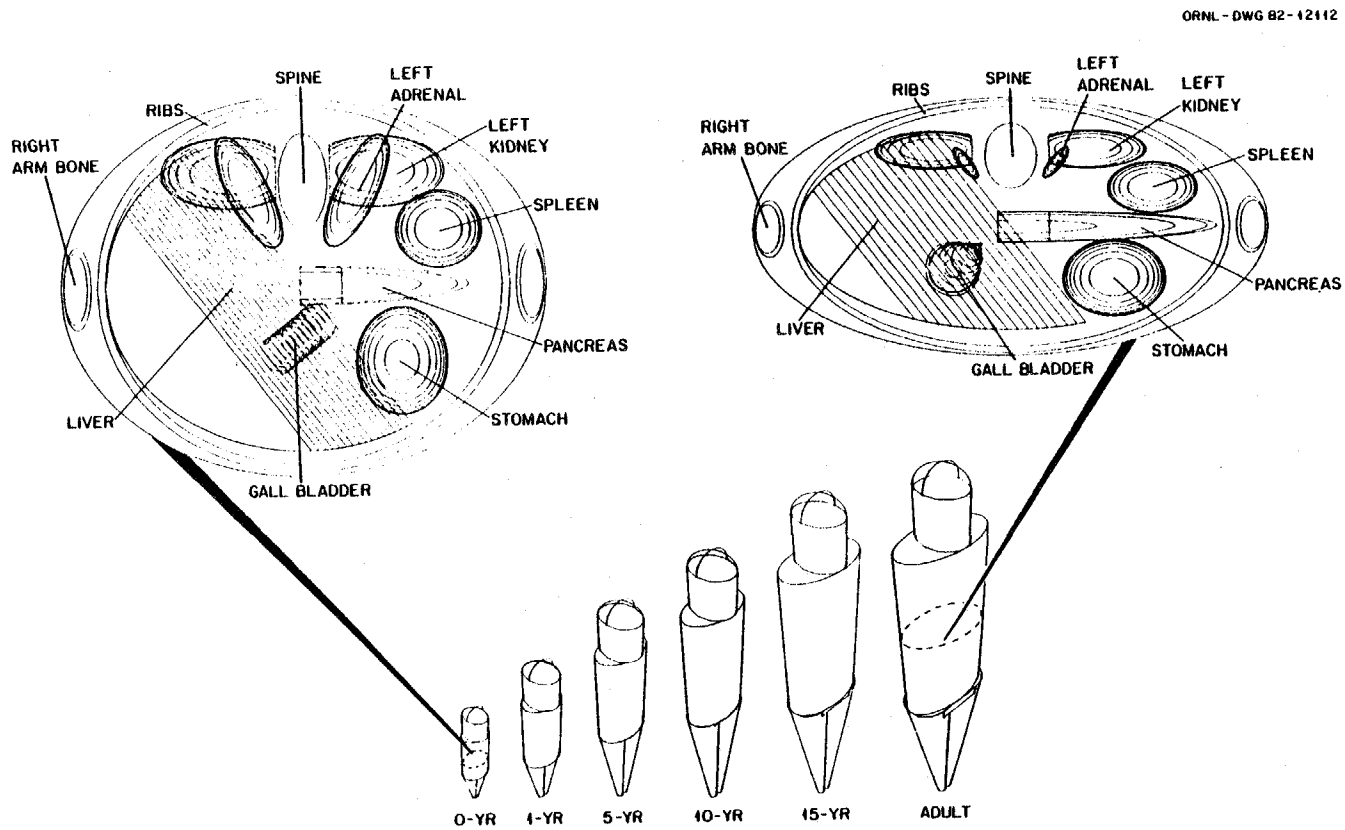

Figure III-1. External views of the phantoms and superimposed cross-sections within the middle trunk of the newborn and adult phantoms, depicting the space from the bottom of the liver to the top of the liver. In the younger phantoms, the head is relatively larger, the legs are relatively smaller, and the trunk is relatively thicker. The geometry of the organs may change dramatically from birth to adulthood. (From Ref. 12.)

ORNL-DWG 82-12113

LIVER -to- OVARIES

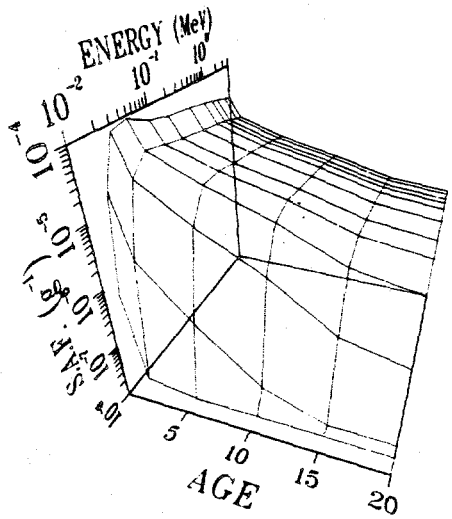

LIVER -to- LIVER

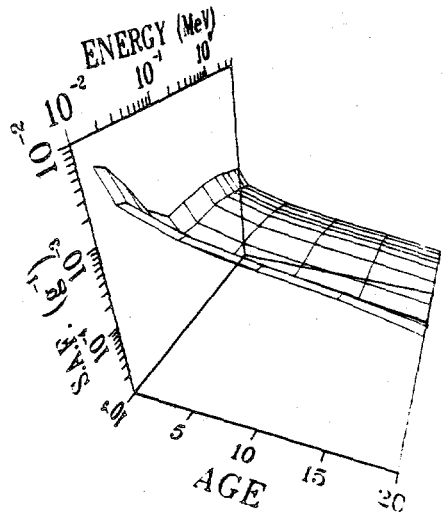

LUNGS -to- BREAST

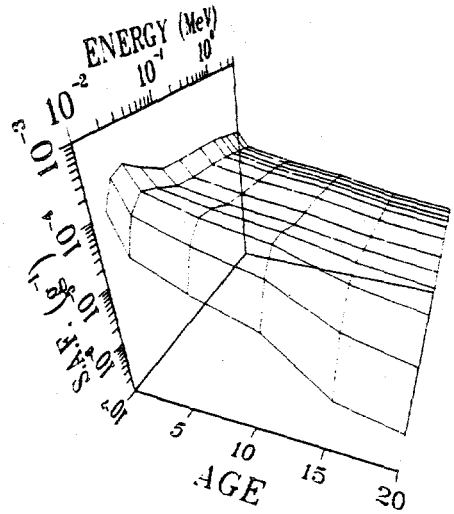

Figure III-2. The notation "Y -to- X" indicates that Y is the source organ and X is the target organ. The figures show the specific absorbed fractions (S.A.F.'s) for photons for various source and target organs, energies, and ages. A typical pattern at all energies is that the S.A.F. (the fraction of energy emitted from within Y that is absorbed by X per gram of X) decreases with age. The effects of the changes with age in the geometries and masses of organs are most marked for low-energy photons. (From Ref. 9 and unpublished work of M. Cristy.)

REFERENCES FOR CHAPTER III

[1] Leggett, R. W., Eckerman, K. F., Dunning, D. E., Jr., Cristy, M., Crawford-Brown, D. J., and Williams, L. R., On Estimating Dose Rates to Organs as a Function of Age Following Internal Exposure to Radionuclides, Oak Ridge National Laboratory Report ORNL/TM-8265, 1984.

[2] M. Cristy, R. W. Leggett, D. E. Dunning, Jr., and K. F. Eckerman, Age-Dependent Dose-Conversion Factors for Selected Bone-Seeking Radionuclides, U.S. Nuclear Regulatory Commission Report NUREG/CR-3535 (Oak Ridge National Laboratory Report ORNL/TM-8929), 1984.

[3] Morrow, P. E., Bates, D. V., Fish, B. R., Hatch, T. F., and Mercer, T. T., Deposition and retention models for internal dosimetry of the human respiratory tract, Health Phys. 12, 1966, 173-207.

[4] Snyder, W. S., Ford, M. R., Warner, G. G., and Watson, S. B., A Tabulation of Dose Equivalent per Microcurie-Day for Source and Target Organs of an Adult for Various Radionuclides, Part 1, Oak Ridge National Laboratory Report ORNL-5000, 1974.

[5] Dunning, D. E., Jr., Pleasant, J. C., and Killough, G. G., S FACTOR: A Computer Code for Calculating Dose Equivalent to a Target Organ per Microcurie-Day Residence of a Radionuclide in a Source Organ - Supplementary Report, U.S. Nuclear Regulatory Commission Report NUREG/CR-1523 (Oak Ridge National Laboratory Report ORNL/NUREG/TM-85/S1), 1980.

[6] Cristy, M., "Development of mathematical pediatric phantoms for internal dose calculations: designs, limitations, and prospects," Proceedings of the International Radiopharmaceutical Dosimetry Symposium, U.S. Department of Health and Human Services, Rockville, Md., 1980, 496-517.

[7] Berger, M. J., "Energy deposition in water by photons from point isotropic sources," MIRD Pamphlet 2, J. Nucl. Med. 9, Suppl. No. 1, 1968, 15-25.

[8] Yalcintas, M. G., Eckerman, K. F., and Warner, G. G., "Experimental validation of Monte Carlo calculations for organ dose," Proceedings of the International Radiopharmaceutical Dosimetry Symposium, U.S. Department of Health and Human Services, Rockville, Md., 1980, 482-495.

[9] Cristy, M., and Eckerman, K. F., Specific Absorbed Fractions of Energy at Various Ages from Internal Photon Sources, Oak Ridge National Laboratory Report ORNL/TM-8381: Vols. 1-6 (in review).

[10] International Commission on Radiological Protection, Publication 30, Limits for Intakes by Workers, Pergamon Press, Oxford, 1979.

[11] Thorne, M. D., "Aspects of the dosimetry of alpha-emitting radionuclides in bone with particular emphasis on Ra-226 and Pu-239," Phys. Med. Biol. 22, 1977, 36-46.

[12] Cristy, M., Mathematical Phantoms Representing Children of Various Ages for Use in Estimates of Internal Dose, U.S. Nuclear Regulatory Commission Report NUREG/CR-1159 (Oak Ridge National Laboratory Report ORNL/NUREG/TM-367), 1980.

CHAPTER IV. RELATIVE AGE-SPECIFIC DOSE-CONVERSION FACTORS

Values of the 50-year committed dose equivalents to 21 target tissues from an acute unit intake of a given radionuclide at age 0, 100, 365, 1825, 3650, 5475, or 7300 days (0, 0.3, 1, 5, 10, 15, or 20 years) are given in Tables IV-1 and IV-2. These values are normalized to the value for the adult, which is taken as one. Values for intakes by ingestion are given in Table IV-1 (denoted by G under "INTAKE MODE" in the table), and intakes by inhalation of a Class D, W, or Y aerosol (also shown under "INTAKE MODE") with activity median aerodynamic diameter (AMAD) of 0.3, 1.0, or 5.0 μm are given in Table IV-2. For uranium nuclides, ingestion of a soluble compound is denoted by G-S and ingestion of an insoluble compound is denoted by G-I.

Tables IV-1 and IV-2 are provided for readers who need to consider age groups different from those defined by the U.S. Nuclear Regulatory Commission (NRC). For purposes of regulation, the NRC defines four different age groups: infant (0-1 yr), child (1-11 yr), teenager (11-17 yr), and adult (over 17 yr). Relative 50-year committed dose equivalents for these age groups are tabulated in Tables IV-3, IV-4, IV-5, and IV-6. Values for intakes by ingestion by persons in the four NRC age groups are given in Table IV-3 for 21 target organs used in ICRP 26[1] and 30[2] and in Table IV-4 for "bone", as defined in NUREG/CR-0150.[3] (It should be noted that "bone" as defined in NUREG/CR-0150 is not considered in ICRP 26 and 30 but is replaced with consideration of dose to bone surfaces and active marrow; however, the concept of dose to "bone" is still used in some NRC regulations.) Values for intakes by inhalation of a Class D, W, or Y aerosol with AMAD of 0.3, 1.0, or 5.0 μm are given in Table IV-5 for the target organs used in ICRP 26 and 30 and in Table IV-6 for bone. As before, ingestion of a soluble uranium compound is denoted by G-S and ingestion of an insoluble uranium compound is denoted by G-I.

For derivation of the relative committed dose equivalents in Tables IV-3 through IV-6, the 50-year committed dose equivalents due to a chronic intake of one unit activity of the parent radionuclide over a one-year period as an infant are approximated as an average of 50-year

committed dose equivalents due to acute unit intakes at ages 0 and 365 days; those for a child are approximated as 50-year committed dose equivalents due to an acute unit intake at age 1825 days (5 years); those for a teenager are approximated using an acute unit intake at age 5475 days (15 years); and those for an adult are approximated using an acute unit intake at age 7300 days (20 years). The committed dose equivalents estimated in this way are not improved substantially by using more precise but laborious approximation techniques (for example, by representing a one-year unit intake as the sum of 365 acute intakes occurring on consecutive days).

Relative committed dose equivalents for the total body have not been tabulated, because the quantity "total body dose" is not consistent with the methodology of ICRP 26 and 30. Instead, we have tabulated the relative effective dose equivalent (under column "EFFECTIVE" in the tables), which was introduced by the ICRP to facilitate comparison of organ doses computed for internal emitters as well as external irradiation, the latter of which approaches a uniform dose distribution. The effective dose equivalent is a weighted average of the dose equivalents to various organs and tissues of the body. Although this quantity was defined in ICRP 26, it was not given a name until the 1980 meeting of the Commission.[4] The weighting factors used in computing this quantity are representative of the contribution of each organ to the risk of stochastic effects such as cancer. Thus the effective dose equivalent, as a single index, represents not only the total energy deposition in the body, as did the earlier quantity "total body dose," but also the manner in which the absorbed energy, and thus dose, is distributed among organs and tissues of the body in accordance with their relative sensitivities. It is recommended that this quantity be used instead of total body dose.

REFERENCES FOR CHAPTER IV

[1] International Commission on Radiological Protection, Publication 26, Recommendations of the International Commission on Radiological Protection, Pergamon Press, Oxford, 1977.

[2] International Commission on Radiological Protection, Publication 30, Limits for Intakes by Workers, Pergamon Press, Oxford, 1979.

[3] Dunning, D. E., Killough, G. G., Bernard, S. R., Pleasant, J. C., Walsh, P. J., Estimates of Internal Dose Equivalent to 22 Target Organs for Radionuclides Occurring in Routine Releases from Nuclear Fuel-Cycle Facilities, Vol. III, U.S. Nuclear Regulatory Commission Report NUREG/CR-0150 (Oak Ridge National Laboratory Report ORNL/NUREG/TM-190/V3), 1981.

[4] International Commission on Radiological Protection, Statement and Recommendations of the 1980 Brighton Meeting of the ICRP, Annals of the ICRP, Volume 4, No. 3/4.

Table IV-1. Ingestion case. AGEDOS grid.

FIFTY-YEAR COMMITTED DOSE EQUIVALENT (NORMALIZED TO ADULT VALUE) FROM RADIONUCLIDE INGESTION

NUCLIDE	INTAKE MODE	F1	AGE	EFFEC-TIVE	ADRENALS	BLADDER WALL	BRAIN	BONE SURFACE	BREAST	STOMACH WALL	SI WALL	ULI WALL	LLI WALL	KIDNEYS
PB-210	G	6.4E-01	0	8.0	20.	20.	20.	5.0	20.	20.	20.	20.	19.	18.
	G	6.0E-01	100	7.1	18.	18.	18.	4.5	18.	18.	18.	18.	17.	15.
	G	4.0E-01	365	4.1	11.	11.	11.	2.6	11.	11.	11.	11.	10.	8.6
	G	2.8E-01	1825	1.7	3.9	3.9	3.9	1.1	3.9	3.9	3.9	3.9	3.9	3.4
	G	3.2E-01	3650	1.7	2.6	2.6	2.6	1.5	2.6	2.6	2.6	2.6	2.6	2.6
	G	3.6E-01	5475	2.2	2.1	2.1	2.1	2.4	2.1	2.1	2.1	2.1	2.0	2.1
	G	2.0E-01	7300	1.0	1.0	1.0	1.0	1.0	1.0	1.0	1.0	1.0	1.0	1.0
PO-210	G	3.2E-01	0	68.	37.	37.	37.	250.	37.	37.	36.	33.	29.	39.
	G	3.0E-01	100	49.	30.	30.	30.	170.	30.	30.	29.	27.	23.	30.
	G	2.0E-01	365	14.	12.	12.	12.	34.	12.	12.	12.	11.	9.9	9.7
	G	1.4E-01	1825	4.7	4.6	4.6	4.6	6.6	4.6	4.6	4.6	4.5	4.2	3.7
	G	1.6E-01	3650	3.5	3.1	3.1	3.1	5.1	3.1	3.0	3.0	2.9	2.7	2.8
	G	1.8E-01	5475	2.5	1.9	1.9	1.9	4.2	1.9	1.9	1.9	1.8	1.6	2.2
	G	1.0E-01	7300	1.0	1.0	1.0	1.0	1.0	1.0	1.0	1.0	1.0	1.0	1.0
RA-226	G	6.4E-01	0	26.	15.	15.	15.	32.	15.	15.	15.	14.	13.	15.
	G	6.0E-01	100	20.	13.	13.	13.	24.	13.	13.	13.	12.	11.	12.
	G	4.0E-01	365	5.8	6.4	6.4	6.4	5.7	6.4	6.4	6.4	6.4	6.1	4.6
	G	2.8E-01	1825	1.8	2.7	2.7	2.7	1.6	2.7	2.7	2.7	2.8	2.9	1.9
	G	3.2E-01	3650	2.0	2.3	2.3	2.3	2.0	2.3	2.3	2.3	2.3	2.2	2.2
	G	3.6E-01	5475	3.2	3.0	3.0	3.0	3.7	3.0	3.0	2.9	2.7	2.2	3.0
	G	2.0E-01	7300	1.0	1.0	1.0	1.0	1.0	1.0	1.0	1.0	1.0	1.0	1.0
RA-228	G	6.4E-01	0	25.	15.	15.	15.	26.	15.	15.	15.	15.	14.	19.
	G	6.0E-01	100	26.	16.	16.	16.	26.	16.	16.	16.	16.	15.	20.
	G	4.0E-01	365	13.	9.9	9.9	9.8	13.	9.9	9.9	9.9	9.8	9.4	11.
	G	2.8E-01	1825	4.1	3.9	3.9	3.9	4.2	3.9	3.9	3.9	3.9	3.8	4.3
	G	3.2E-01	3650	3.1	2.8	2.8	2.8	3.3	2.8	2.8	2.8	2.8	2.7	3.3
	G	3.6E-01	5475	2.4	1.9	1.9	1.9	2.7	1.9	1.9	1.9	1.8	1.8	2.1
	G	2.0E-01	7300	1.0	1.0	1.0	1.0	1.0	1.0	1.0	1.0	1.0	1.0	1.0
TH-228	G	1.0E-02	0	450.	150.	150.	150.	510.	150.	140.	110.	51.	27.	190.
	G	5.0E-03	100	180.	71.	70.	71.	200.	70.	64.	55.	29.	19.	85.
	G	5.0E-04	365	14.	7.9	7.9	7.9	15.	7.9	7.8	7.7	7.7	7.3	8.0
	G	5.0E-04	1825	6.4	4.3	4.3	4.3	6.5	4.3	4.2	4.1	4.0	3.7	4.4
	G	5.0E-04	3650	3.8	2.7	2.7	2.7	4.1	2.7	2.6	2.5	2.4	2.2	3.1
	G	5.0E-04	5475	2.6	1.9	1.9	1.9	2.9	1.9	1.9	1.7	1.4	1.3	2.4
	G	2.0E-04	7300	1.0	1.0	1.0	1.0	1.0	1.0	1.0	1.0	1.0	1.0	1.0
TH-230	G	1.0E-02	0	88.	230.	230.	230.	69.	230.	170.	120.	51.	31.	280.
	G	5.0E-03	100	40.	100.	100.	100.	32.	100.	78.	59.	29.	21.	120.
	G	5.0E-04	365	3.7	8.0	8.0	8.0	2.9	8.0	7.7	7.8	7.8	7.4	10.
	G	5.0E-04	1825	2.8	4.7	4.7	4.7	2.4	4.7	4.3	4.2	4.0	3.7	6.1
	G	5.0E-04	3650	2.4	3.1	3.1	3.1	2.3	3.1	2.8	2.7	2.4	2.2	3.9
	G	5.0E-04	5475	2.2	2.3	2.3	2.3	2.2	2.3	2.0	1.8	1.4	1.3	2.7
	G	2.0E-04	7300	1.0	1.0	1.0	1.0	1.0	1.0	1.0	1.0	1.0	1.0	1.0
TH-232	G	1.0E-02	0	95.	160.	160.	160.	77.	160.	140.	120.	58.	34.	210.
	G	5.0E-03	100	44.	73.	74.	73.	36.	73.	65.	56.	32.	22.	95.
	G	5.0E-04	365	4.0	6.4	6.4	6.3	3.3	6.4	6.5	6.8	7.4	7.3	8.1
	G	5.0E-04	1825	3.1	4.5	4.5	4.5	2.7	4.5	4.4	4.3	4.1	3.8	5.5
	G	5.0E-04	3650	2.6	3.6	3.6	3.6	2.5	3.6	3.3	3.2	2.7	2.3	4.0
	G	5.0E-04	5475	2.4	2.6	2.6	2.6	2.3	2.6	2.4	2.2	1.6	1.4	2.8
	G	2.0E-04	7300	1.0	1.0	1.0	1.0	1.0	1.0	1.0	1.0	1.0	1.0	1.0

Table IV-1. (Continued). Ingestion case. AGEDOS grid.

FIFTY-YEAR COMMITTED DOSE EQUIVALENT (NORMALIZED TO ADULT VALUE) FROM RADIONUCLIDE INGESTION

NUCLIDE	INTAKE MODE	F1	AGE	LIVER	LUNGS	OVARIES	PANCREAS	ACTIVE MARROW	SKIN	SPLEEN	TESTES	THYMUS	THYROID	UTERUS
PB-210	G	6.4E-01	0	22.	20.	20.	20.	3.3	20.	24.	20.	20.	20.	20.
	G	6.0E-01	100	19.	18.	18.	18.	3.1	18.	21.	18.	18.	18.	18.
	G	4.0E-01	365	11.	11.	11.	11.	1.9	11.	12.	11.	11.	11.	11.
	G	2.8E-01	1825	3.9	3.9	3.9	3.9	0.87	3.9	4.5	3.9	3.9	3.9	3.9
	G	3.2E-01	3650	2.8	2.6	2.6	2.6	0.95	2.6	3.2	2.6	2.6	2.6	2.6
	G	3.6E-01	5475	2.1	2.1	2.1	2.1	1.3	2.1	2.3	2.1	2.1	2.1	2.1
	G	2.0E-01	7300	1.0	1.0	1.0	1.0	1.0	1.0	1.0	1.0	1.0	1.0	1.0
PO-210	G	3.2E-01	0	43.	37.	37.	37.	91.	37.	57.	37.	37.	37.	37.
	G	3.0E-01	100	34.	30.	30.	30.	64.	30.	43.	30.	30.	30.	30.
	G	2.0E-01	365	12.	12.	12.	12.	13.	12.	14.	12.	12.	12.	12.
	G	1.4E-01	1825	4.3	4.6	4.6	4.6	3.3	4.6	5.2	4.6	4.6	4.6	4.6
	G	1.6E-01	3650	3.2	3.1	3.1	3.1	2.6	3.1	3.7	3.1	3.1	3.1	3.1
	G	1.8E-01	5475	2.3	1.9	1.9	1.9	2.1	1.9	2.6	1.9	1.9	1.9	1.9
	G	1.0E-01	7300	1.0	1.0	1.0	1.0	1.0	1.0	1.0	1.0	1.0	1.0	1.0
RA-226	G	6.4E-01	0	39.	15.	15.	15.	17.	50.	18.	15.	15.	15.	15.
	G	6.0E-01	100	31.	13.	13.	13.	14.	43.	14.	13.	13.	13.	13.
	G	4.0E-01	365	11.	6.4	6.4	6.4	3.9	22.	5.0	6.4	6.4	6.4	6.4
	G	2.8E-01	1825	3.9	2.7	2.7	2.7	1.3	3.8	2.6	2.7	2.7	2.7	2.7
	G	3.2E-01	3650	3.0	2.3	2.3	2.3	1.4	2.8	2.6	2.3	2.3	2.3	2.3
	G	3.6E-01	5475	2.4	3.0	3.0	3.0	1.9	3.0	3.4	3.0	3.0	3.0	3.0
	G	2.0E-01	7300	1.0	1.0	1.0	1.0	1.0	1.0	1.0	1.0	1.0	1.0	1.0
RA-228	G	6.4E-01	0	24.	15.	15.	15.	27.	15.	34.	15.	15.	15.	15.
	G	6.0E-01	100	25.	16.	16.	16.	27.	16.	35.	16.	16.	16.	16.
	G	4.0E-01	365	14.	9.9	9.9	9.9	13.	9.9	19.	9.9	9.9	9.9	9.9
	G	2.8E-01	1825	4.9	3.9	3.9	3.9	3.8	3.9	6.4	3.9	3.9	3.9	3.9
	G	3.2E-01	3650	3.5	2.8	2.8	2.8	2.6	2.8	4.1	2.8	2.8	2.8	2.8
	G	3.6E-01	5475	2.2	1.9	1.9	1.9	2.0	1.9	2.3	1.9	1.9	1.9	1.9
	G	2.0E-01	7300	1.0	1.0	1.0	1.0	1.0	1.0	1.0	1.0	1.0	1.0	1.0
TH-228	G	1.0E-02	0	250.	150.	150.	150.	800.	150.	390.	150.	150.	150.	150.
	G	5.0E-03	100	110.	71.	69.	71.	300.	71.	160.	71.	71.	71.	70.
	G	5.0E-04	365	10.	7.9	7.9	7.9	20.	7.9	14.	7.9	7.9	7.9	7.9
	G	5.0E-04	1825	5.3	4.3	4.3	4.3	9.1	4.3	7.1	4.3	4.3	4.3	4.3
	G	5.0E-04	3650	3.5	2.7	2.7	2.7	4.7	2.7	4.3	2.7	2.7	2.7	2.7
	G	5.0E-04	5475	2.5	1.9	1.9	1.9	2.9	1.9	2.8	1.9	1.9	1.9	1.9
	G	2.0E-04	7300	1.0	1.0	1.0	1.0	1.0	1.0	1.0	1.0	1.0	1.0	1.0
TH-230	G	1.0E-02	0	320.	230.	230.	230.	200.	230.	380.	230.	230.	230.	230.
	G	5.0E-03	100	140.	100.	100.	100.	87.	100.	170.	100.	100.	100.	100.
	G	5.0E-04	365	12.	8.1	8.1	8.0	7.2	8.1	13.	8.1	8.1	8.1	8.0
	G	5.0E-04	1825	6.6	4.7	4.7	4.7	4.5	4.7	7.5	4.7	4.7	4.7	4.7
	G	5.0E-04	3650	4.1	3.1	3.1	3.1	3.1	3.1	4.4	3.1	3.1	3.1	3.1
	G	5.0E-04	5475	2.7	2.3	2.3	2.3	2.4	2.3	2.8	2.3	2.3	2.3	2.3
	G	2.0E-04	7300	1.0	1.0	1.0	1.0	1.0	1.0	1.0	1.0	1.0	1.0	1.0
TH-232	G	1.0E-02	0	240.	160.	160.	160.	170.	160.	300.	160.	160.	160.	160.
	G	5.0E-03	100	110.	74.	74.	74.	76.	74.	140.	74.	74.	74.	74.
	G	5.0E-04	365	9.3	6.4	6.4	6.4	6.5	6.4	11.	6.4	6.4	6.4	6.4
	G	5.0E-04	1825	5.9	4.5	4.5	4.5	4.3	4.5	6.7	4.5	4.5	4.5	4.5
	G	5.0E-04	3650	4.1	3.6	3.6	3.6	3.1	3.6	4.3	3.6	3.6	3.6	3.6
	G	5.0E-04	5475	2.8	2.6	2.6	2.6	2.4	2.6	2.9	2.6	2.6	2.6	2.6
	G	2.0E-04	7300	1.0	1.0	1.0	1.0	1.0	1.0	1.0	1.0	1.0	1.0	1.0

Table IV-1. (Continued). Ingestion case. AGEDOS grid.

FIFTY-YEAR COMMITTED DOSE EQUIVALENT (NORMALIZED TO ADULT VALUE) FROM RADIONUCLIDE INGESTION

NUCLIDE	INTAKE MODE	F1	AGE	EFFEC-TIVE	ADRENALS	BLADDER WALL	BRAIN	BONE SURFACE	BREAST	STOMACH WALL	SI WALL	ULI WALL	LLI WALL	KIDNEYS
U-234	G-S	1.6E-01	0	110.	56.	56.	56.	190.	56.	53.	49.	36.	26.	55.
	G-S	1.5E-01	100	78.	41.	41.	41.	130.	41.	40.	37.	27.	20.	41.
	G-S	1.0E-01	365	16.	15.	15.	15.	23.	15.	14.	13.	11.	8.7	11.
	G-S	7.0E-02	1825	4.0	4.8	4.8	4.8	4.3	4.8	4.7	4.6	4.3	3.9	3.9
	G-S	8.0E-02	3650	3.2	3.4	3.4	3.4	3.8	3.4	3.2	3.2	2.8	2.4	3.0
	G-S	9.0E-02	5475	3.1	2.4	2.4	2.4	4.3	2.4	2.3	2.2	1.8	1.5	2.5
	G-S	5.0E-02	7300	1.0	1.0	1.0	1.0	1.0	1.0	1.0	1.0	1.0	1.0	1.0
	G-I	6.4E-03	0	59.	56.	56.	56.	190.	56.	34.	25.	21.	20.	55.
	G-I	6.0E-03	100	42.	41.	41.	41.	130.	41.	26.	20.	17.	16.	41.
	G-I	4.0E-03	365	11.	15.	15.	15.	23.	15.	9.5	8.7	8.0	7.4	11.
	G-I	2.8E-03	1825	3.8	4.8	4.8	4.8	4.3	4.8	3.8	3.9	3.9	3.7	3.9
	G-I	3.2E-03	3650	2.6	3.4	3.4	3.4	3.8	3.4	2.4	2.4	2.3	2.2	3.0
	G-I	3.6E-03	5475	2.0	2.4	2.4	2.4	4.3	2.4	1.6	1.4	1.3	1.2	2.5
	G-I	2.0E-03	7300	1.0	1.0	1.0	1.0	1.0	1.0	1.0	1.0	1.0	1.0	1.0
U-235	G-S	1.6E-01	0	110.	55.	55.	55.	190.	55.	53.	48.	34.	25.	55.
	G-S	1.5E-01	100	77.	41.	41.	41.	130.	41.	39.	36.	26.	20.	41.
	G-S	1.0E-01	365	16.	15.	15.	15.	23.	15.	14.	13.	11.	8.5	11.
	G-S	7.0E-02	1825	4.0	4.8	4.8	4.8	4.3	4.8	4.7	4.6	4.2	3.8	3.9
	G-S	8.0E-02	3650	3.2	3.3	3.3	3.3	3.8	3.3	3.2	3.1	2.7	2.4	3.0
	G-S	9.0E-02	5475	3.1	2.4	2.3	2.4	4.3	2.4	2.3	2.1	1.7	1.4	2.5
	G-S	5.0E-02	7300	1.0	1.0	1.0	1.0	1.0	1.0	1.0	1.0	1.0	1.0	1.0
	G-I	6.4E-03	0	55.	55.	50.	55.	190.	53.	33.	24.	21.	19.	55.
	G-I	6.0E-03	100	40.	41.	37.	41.	130.	39.	26.	19.	17.	16.	41.
	G-I	4.0E-03	365	11.	14.	13.	15.	23.	14.	9.2	8.4	7.9	7.4	11.
	G-I	2.8E-03	1825	3.8	4.8	4.5	4.8	4.3	4.6	3.8	3.9	3.9	3.7	3.9
	G-I	3.2E-03	3650	2.6	3.3	3.2	3.3	3.8	3.2	2.3	2.4	2.3	2.2	3.0
	G-I	3.6E-03	5475	1.9	2.3	2.2	2.4	4.3	2.3	1.6	1.4	1.3	1.2	2.5
	G-I	2.0E-03	7300	1.0	1.0	1.0	1.0	1.0	1.0	1.0	1.0	1.0	1.0	1.0
U-238	G-S	1.6E-01	0	110.	54.	54.	54.	180.	54.	51.	48.	35.	25.	53.
	G-S	1.5E-01	100	74.	40.	40.	40.	120.	40.	38.	36.	27.	20.	39.
	G-S	1.0E-01	365	16.	15.	15.	15.	23.	15.	14.	13.	11.	8.6	11.
	G-S	7.0E-02	1825	3.9	4.8	4.8	4.8	4.3	4.8	4.7	4.6	4.3	3.9	3.9
	G-S	8.0E-02	3650	3.2	3.3	3.3	3.3	3.8	3.3	3.2	3.1	2.7	2.4	3.0
	G-S	9.0E-02	5475	3.1	2.3	2.3	2.3	4.3	2.3	2.3	2.2	1.7	1.4	2.5
	G-S	5.0E-02	7300	1.0	1.0	1.0	1.0	1.0	1.0	1.0	1.0	1.0	1.0	1.0
	G-I	6.4E-03	0	56.	54.	53.	54.	180.	53.	33.	25.	21.	20.	53.
	G-I	6.0E-03	100	40.	40.	40.	40.	120.	40.	26.	20.	17.	16.	39.
	G-I	4.0E-03	365	11.	15.	14.	15.	23.	15.	9.4	8.6	8.0	7.4	11.
	G-I	2.8E-03	1825	3.8	4.8	4.7	4.8	4.3	4.8	3.8	3.9	3.9	3.7	3.9
	G-I	3.2E-03	3650	2.6	3.3	3.3	3.3	3.8	3.3	2.4	2.4	2.3	2.2	3.0
	G-I	3.6E-03	5475	2.0	2.3	2.3	2.4	4.3	2.3	1.6	1.4	1.3	1.2	2.5
	G-I	2.0E-03	7300	1.0	1.0	1.0	1.0	1.0	1.0	1.0	1.0	1.0	1.0	1.0

Table IV-1. (Continued). Ingestion case. AGEDOS grid.

FIFTY-YEAR COMMITTED DOSE EQUIVALENT (NORMALIZED TO ADULT VALUE) FROM RADIONUCLIDE INGESTION

NUCLIDE	INTAKE MODE	F1	AGE	LIVER	LUNGS	OVARIES	PANCREAS	ACTIVE MARROW	SKIN	SPLEEN	TESTES	THYMUS	THYROID	UTERUS
U-234	G-S	1.6E-01	0	53.	56.	56.	56.	76.	56.	74.	56.	56.	56.	56.
	G-S	1.5E-01	100	39.	41.	41.	41.	54.	41.	48.	41.	41.	41.	41.
	G-S	1.0E-01	365	14.	15.	15.	15.	10.	15.	15.	15.	15.	15.	15.
	G-S	7.0E-02	1825	4.4	4.8	4.8	4.8	2.4	4.8	5.0	4.8	4.8	4.8	4.8
	G-S	8.0E-02	3650	3.4	3.4	3.4	3.4	2.1	3.4	3.9	3.4	3.4	3.4	3.4
	G-S	9.0E-02	5475	2.5	2.4	2.4	2.4	2.1	2.4	3.1	2.4	2.4	2.4	2.4
	G-S	5.0E-02	7300	1.0	1.0	1.0	1.0	1.0	1.0	1.0	1.0	1.0	1.0	1.0
	G-I	6.4E-03	0	53.	56.	56.	56.	76.	56.	74.	56.	56.	56.	56.
	G-I	6.0E-03	100	39.	41.	41.	41.	54.	41.	48.	41.	41.	41.	41.
	G-I	4.0E-03	365	14.	15.	15.	15.	10.	15.	15.	15.	15.	15.	15.
	G-I	2.8E-03	1825	4.4	4.8	4.8	4.8	2.4	4.8	5.0	4.8	4.8	4.8	4.8
	G-I	3.2E-03	3650	3.4	3.4	3.3	3.4	2.1	3.4	3.9	3.4	3.4	3.4	3.4
	G-I	3.6E-03	5475	2.5	2.4	2.4	2.4	2.1	2.4	3.1	2.4	2.4	2.4	2.4
	G-I	2.0E-03	7300	1.0	1.0	1.0	1.0	1.0	1.0	1.0	1.0	1.0	1.0	1.0
U-235	G-S	1.6E-01	0	53.	55.	55.	55.	76.	55.	74.	55.	55.	55.	55.
	G-S	1.5E-01	100	39.	41.	41.	41.	54.	41.	48.	41.	41.	41.	41.
	G-S	1.0E-01	365	13.	15.	14.	15.	10.	15.	15.	15.	15.	15.	15.
	G-S	7.0E-02	1825	4.4	4.8	4.8	4.8	2.4	4.8	5.0	4.8	4.8	4.8	4.8
	G-S	8.0E-02	3650	3.4	3.3	3.3	3.3	2.1	3.3	3.9	3.3	3.3	3.3	3.3
	G-S	9.0E-02	5475	2.5	2.4	2.3	2.4	2.1	2.4	3.1	2.4	2.4	2.4	2.3
	G-S	5.0E-02	7300	1.0	1.0	1.0	1.0	1.0	1.0	1.0	1.0	1.0	1.0	1.0
	G-I	6.4E-03	0	51.	55.	41.	53.	75.	55.	73.	54.	55.	55.	49.
	G-I	6.0E-03	100	38.	41.	31.	40.	53.	41.	47.	40.	41.	41.	36.
	G-I	4.0E-03	365	13.	15.	11.	14.	9.9	15.	15.	14.	15.	15.	13.
	G-I	2.8E-03	1825	4.4	4.8	4.1	4.7	2.4	4.8	5.0	4.8	4.8	4.8	4.5
	G-I	3.2E-03	3650	3.3	3.3	2.8	3.3	2.1	3.3	3.8	3.3	3.3	3.3	3.1
	G-I	3.6E-03	5475	2.4	2.4	2.0	2.3	2.0	2.3	3.1	2.3	2.4	2.4	2.2
	G-I	2.0E-03	7300	1.0	1.0	1.0	1.0	1.0	1.0	1.0	1.0	1.0	1.0	1.0
U-238	G-S	1.6E-01	0	51.	54.	54.	54.	71.	54.	71.	54.	54.	54.	54.
	G-S	1.5E-01	100	38.	40.	40.	40.	51.	40.	46.	40.	40.	40.	40.
	G-S	1.0E-01	365	13.	15.	15.	15.	9.8	15.	15.	15.	15.	15.	15.
	G-S	7.0E-02	1825	4.4	4.8	4.8	4.8	2.4	4.8	5.0	4.8	4.8	4.8	4.8
	G-S	8.0E-02	3650	3.3	3.3	3.3	3.3	2.1	3.3	3.8	3.3	3.3	3.3	3.3
	G-S	9.0E-02	5475	2.5	2.4	2.3	2.3	2.0	2.3	3.1	2.3	2.3	2.3	2.3
	G-S	5.0E-02	7300	1.0	1.0	1.0	1.0	1.0	1.0	1.0	1.0	1.0	1.0	1.0
	G-I	6.4E-03	0	51.	54.	52.	53.	71.	54.	71.	53.	54.	54.	53.
	G-I	6.0E-03	100	38.	40.	39.	40.	51.	40.	46.	40.	40.	40.	40.
	G-I	4.0E-03	365	13.	15.	14.	15.	9.8	15.	15.	14.	15.	15.	14.
	G-I	2.8E-03	1825	4.3	4.8	4.7	4.8	2.4	4.8	5.0	4.8	4.8	4.8	4.7
	G-I	3.2E-03	3650	3.3	3.3	3.2	3.3	2.1	3.3	3.8	3.3	3.3	3.3	3.3
	G-I	3.6E-03	5475	2.5	2.3	2.3	2.3	2.0	2.3	3.1	2.3	2.3	2.3	2.3
	G-I	2.0E-03	7300	1.0	1.0	1.0	1.0	1.0	1.0	1.0	1.0	1.0	1.0	1.0

Table IV-2. Inhalation case. AGEDOS grid.

FIFTY-YEAR COMMITTED DOSE EQUIVALENT (NORMALIZED TO ADULT VALUE) FROM RADIONUCLIDE INHALATION

NUCLIDE	INTAKE MODE	AMAD	F1	AGE	EFFEC-TIVE	ADRENALS	BLADDER WALL	BRAIN	BONE SURFACE	BREAST	STOMACH WALL	SI WALL	ULI WALL	LLI WALL	KIDNEYS
PB-210	D	0.3	6.4E-01	0	2.6	6.4	6.4	6.4	1.6	6.4	6.4	6.4	6.4	6.4	5.8
	D	0.3	6.0E-01	100	2.5	6.2	6.2	6.2	1.6	6.2	6.2	6.2	6.2	6.2	5.2
	D	0.3	4.0E-01	365	2.1	5.5	5.5	5.5	1.3	5.5	5.5	5.5	5.5	5.5	4.4
	D	0.3	2.8E-01	1825	1.2	2.8	2.8	2.8	0.81	2.8	2.8	2.8	2.8	2.8	2.4
	D	0.3	3.2E-01	3650	1.1	1.7	1.7	1.7	0.95	1.7	1.7	1.7	1.7	1.7	1.6
	D	0.3	3.6E-01	5475	1.2	1.2	1.2	1.2	1.4	1.2	1.2	1.2	1.2	1.2	1.2
	D	0.3	2.0E-01	7300	1.0	1.0	1.0	1.0	1.0	1.0	1.0	1.0	1.0	1.0	1.0
	D	1.0	6.4E-01	0	2.8	7.0	7.0	7.0	1.8	7.0	7.0	7.0	7.0	7.0	6.3
	D	1.0	6.0E-01	100	2.7	6.7	6.7	6.7	1.7	6.7	6.7	6.7	6.7	6.7	5.7
	D	1.0	4.0E-01	365	2.2	5.7	5.7	5.7	1.4	5.7	5.7	5.7	5.7	5.7	4.6
	D	1.0	2.8E-01	1825	1.2	2.9	2.9	2.9	0.82	2.9	2.9	2.9	2.9	2.9	2.5
	D	1.0	3.2E-01	3650	1.1	1.7	1.7	1.7	0.97	1.7	1.7	1.7	1.7	1.7	1.7
	D	1.0	3.6E-01	5475	1.3	1.2	1.2	1.2	1.4	1.2	1.2	1.2	1.2	1.2	1.2
	D	1.0	2.0E-01	7300	1.0	1.0	1.0	1.0	1.0	1.0	1.0	1.0	1.0	1.0	1.0
	D	5.0	6.4E-01	0	3.2	7.9	7.9	7.9	2.0	7.9	7.9	7.9	7.9	7.9	7.0
	D	5.0	6.0E-01	100	3.0	7.4	7.4	7.4	1.9	7.4	7.4	7.4	7.4	7.4	6.3
	D	5.0	4.0E-01	365	2.3	6.1	6.1	6.1	1.5	6.1	6.1	6.1	6.1	6.1	4.8
	D	5.0	2.8E-01	1825	1.3	2.9	2.9	2.9	0.84	2.9	2.9	2.9	2.9	2.9	2.6
	D	5.0	3.2E-01	3650	1.1	1.8	1.8	1.8	1.0	1.8	1.8	1.8	1.8	1.8	1.8
	D	5.0	3.6E-01	5475	1.3	1.3	1.3	1.3	1.5	1.3	1.3	1.3	1.3	1.3	1.3
	D	5.0	2.0E-01	7300	1.0	1.0	1.0	1.0	1.0	1.0	1.0	1.0	1.0	1.0	1.0
PO-210	D	0.3	3.2E-01	0	19.	11.	11.	11.	70.	11.	11.	11.	11.	11.	11.
	D	0.3	3.0E-01	100	15.	9.3	9.3	9.3	51.	9.3	9.3	9.3	9.3	9.3	9.1
	D	0.3	2.0E-01	365	6.8	5.7	5.7	5.7	16.	5.7	5.7	5.7	5.7	5.7	4.7
	D	0.3	1.4E-01	1825	3.3	3.2	3.2	3.2	4.6	3.2	3.2	3.2	3.2	3.2	2.6
	D	0.3	1.6E-01	3650	2.1	1.9	1.9	1.9	3.1	1.9	1.9	1.9	1.9	1.9	1.7
	D	0.3	1.8E-01	5475	1.4	1.1	1.1	1.1	2.2	1.1	1.1	1.1	1.1	1.1	1.2
	D	0.3	1.0E-01	7300	1.0	1.0	1.0	1.0	1.0	1.0	1.0	1.0	1.0	1.0	1.0
	D	1.0	3.2E-01	0	20.	11.	11.	11.	73.	11.	11.	11.	11.	11.	12.
	D	1.0	3.0E-01	100	16.	9.7	9.7	9.7	54.	9.7	9.7	9.7	9.7	9.8	9.5
	D	1.0	2.0E-01	365	7.0	5.9	5.9	5.9	16.	5.9	5.9	5.9	5.9	5.9	4.8
	D	1.0	1.4E-01	1825	3.3	3.2	3.2	3.2	4.6	3.2	3.2	3.2	3.2	3.2	2.6
	D	1.0	1.6E-01	3650	2.1	1.9	1.9	1.9	3.2	1.9	1.9	1.9	1.9	1.9	1.8
	D	1.0	1.8E-01	5475	1.4	1.1	1.1	1.1	2.3	1.1	1.1	1.1	1.1	1.1	1.3
	D	1.0	1.0E-01	7300	1.0	1.0	1.0	1.0	1.0	1.0	1.0	1.0	1.0	1.0	1.0
	D	5.0	3.2E-01	0	22.	12.	12.	12.	78.	12.	12.	12.	12.	12.	12.
	D	5.0	3.0E-01	100	17.	10.	10.	10.	57.	10.	10.	10.	10.	10.	10.
	D	5.0	2.0E-01	365	7.2	6.1	6.1	6.1	17.	6.1	6.1	6.1	6.1	6.1	4.9
	D	5.0	1.4E-01	1825	3.4	3.3	3.3	3.3	4.7	3.3	3.3	3.3	3.3	3.3	2.7
	D	5.0	1.6E-01	3650	2.2	1.9	1.9	1.9	3.2	1.9	1.9	1.9	1.9	1.9	1.8
	D	5.0	1.8E-01	5475	1.5	1.1	1.1	1.1	2.3	1.1	1.1	1.1	1.1	1.1	1.3
	D	5.0	1.0E-01	7300	1.0	1.0	1.0	1.0	1.0	1.0	1.0	1.0	1.0	1.0	1.0

Table IV-2. (Continued). Inhalation case. AGEDOS grid.

FIFTY-YEAR COMMITTED DOSE EQUIVALENT (NORMALIZED TO ADULT VALUE) FROM RADIONUCLIDE INHALATION

NUCLIDE	INTAKE MODE	AMAD	F1	AGE	LIVER	LUNGS	OVARIES	PANCREAS	ACTIVE MARROW	SKIN	SPLEEN	TESTES	THYMUS	THYROID	UTERUS
PB-210	D	0.3	6.4E-01	0	7.1	6.5	6.4	6.4	1.1	6.4	7.9	6.4	6.4	6.4	6.4
	D	0.3	6.0E-01	100	6.5	6.2	6.2	6.2	1.1	6.2	7.3	6.2	6.2	6.2	6.2
	D	0.3	4.0E-01	365	5.4	5.5	5.5	5.5	0.94	5.5	6.3	5.5	5.5	5.5	5.5
	D	0.3	2.8E-01	1825	2.8	2.8	2.8	2.8	0.62	2.8	3.2	2.8	2.8	2.8	2.8
	D	0.3	3.2E-01	3650	1.8	1.7	1.7	1.7	0.60	1.7	2.0	1.7	1.7	1.7	1.7
	D	0.3	3.6E-01	5475	1.2	1.2	1.2	1.2	0.76	1.2	1.3	1.2	1.2	1.2	1.2
	D	0.3	2.0E-01	7300	1.0	1.0	1.0	1.0	1.0	1.0	1.0	1.0	1.0	1.0	1.0
	D	1.0	6.4E-01	0	7.8	7.1	7.0	7.0	1.2	7.0	8.6	7.0	7.0	7.0	7.0
	D	1.0	6.0E-01	100	7.0	6.7	6.7	6.7	1.2	6.7	7.9	6.7	6.7	6.7	6.7
	D	1.0	4.0E-01	365	5.6	5.7	5.7	5.7	0.98	5.7	6.5	5.7	5.7	5.7	5.7
	D	1.0	2.8E-01	1825	2.8	2.9	2.9	2.9	0.63	2.9	3.3	2.9	2.9	2.9	2.9
	D	1.0	3.2E-01	3650	1.8	1.7	1.7	1.7	0.62	1.7	2.0	1.7	1.7	1.7	1.7
	D	1.0	3.6E-01	5475	1.2	1.2	1.2	1.2	0.79	1.2	1.4	1.2	1.2	1.2	1.2
	D	1.0	2.0E-01	7300	1.0	1.0	1.0	1.0	1.0	1.0	1.0	1.0	1.0	1.0	1.0
	D	5.0	6.4E-01	0	8.8	7.9	7.9	7.9	1.3	7.9	9.6	7.9	7.9	7.9	7.9
	D	5.0	6.0E-01	100	7.8	7.4	7.4	7.4	1.3	7.4	8.8	7.4	7.4	7.4	7.4
	D	5.0	4.0E-01	365	5.9	6.1	6.1	6.1	1.0	6.1	6.9	6.1	6.1	6.1	6.1
	D	5.0	2.8E-01	1825	2.9	2.9	2.9	2.9	0.65	2.9	3.4	2.9	2.9	2.9	2.9
	D	5.0	3.2E-01	3650	1.9	1.8	1.8	1.8	0.64	1.8	2.1	1.8	1.8	1.8	1.8
	D	5.0	3.6E-01	5475	1.3	1.3	1.3	1.3	0.82	1.3	1.4	1.3	1.3	1.3	1.3
	D	5.0	2.0E-01	7300	1.0	1.0	1.0	1.0	1.0	1.0	1.0	1.0	1.0	1.0	1.0
PO-210	D	0.3	3.2E-01	0	12.	16.	11.	11.	25.	11.	16.	11.	11.	11.	11.
	D	0.3	3.0E-01	100	10.	13.	9.3	9.3	19.	9.3	13.	9.3	9.3	9.3	9.3
	D	0.3	2.0E-01	365	5.8	6.4	5.7	5.7	6.1	5.7	6.7	5.7	5.7	5.7	5.7
	D	0.3	1.4E-01	1825	3.0	3.4	3.2	3.2	2.3	3.2	3.6	3.2	3.2	3.2	3.2
	D	0.3	1.6E-01	3650	2.0	2.1	1.9	1.9	1.6	1.9	2.2	1.9	1.9	1.9	1.9
	D	0.3	1.8E-01	5475	1.3	1.3	1.1	1.1	1.2	1.1	1.4	1.1	1.1	1.1	1.1
	D	0.3	1.0E-01	7300	1.0	1.0	1.0	1.0	1.0	1.0	1.0	1.0	1.0	1.0	1.0
	D	1.0	3.2E-01	0	13.	15.	11.	11.	26.	11.	17.	11.	11.	11.	11.
	D	1.0	3.0E-01	100	11.	13.	9.7	9.7	20.	9.7	14.	9.7	9.7	9.7	9.7
	D	1.0	2.0E-01	365	6.0	6.4	5.9	5.9	6.3	5.9	6.8	5.9	5.9	5.9	5.9
	D	1.0	1.4E-01	1825	3.0	3.3	3.2	3.2	2.3	3.2	3.6	3.2	3.2	3.2	3.2
	D	1.0	1.6E-01	3650	2.0	2.0	1.9	1.9	1.6	1.9	2.3	1.9	1.9	1.9	1.9
	D	1.0	1.8E-01	5475	1.3	1.3	1.1	1.1	1.2	1.1	1.4	1.1	1.1	1.1	1.1
	D	1.0	1.0E-01	7300	1.0	1.0	1.0	1.0	1.0	1.0	1.0	1.0	1.0	1.0	1.0
	D	5.0	3.2E-01	0	14.	14.	12.	12.	28.	12.	18.	12.	12.	12.	12.
	D	5.0	3.0E-01	100	12.	12.	10.	10.	21.	10.	15.	10.	10.	10.	10.
	D	5.0	2.0E-01	365	6.2	6.2	6.1	6.1	6.5	6.1	7.1	6.1	6.1	6.1	6.1
	D	5.0	1.4E-01	1825	3.0	3.3	3.3	3.3	2.4	3.3	3.7	3.3	3.3	3.3	3.3
	D	5.0	1.6E-01	3650	2.0	2.0	1.9	1.9	1.7	1.9	2.3	1.9	1.9	1.9	1.9
	D	5.0	1.8E-01	5475	1.3	1.2	1.1	1.1	1.2	1.1	1.5	1.1	1.1	1.1	1.1
	D	5.0	1.0E-01	7300	1.0	1.0	1.0	1.0	1.0	1.0	1.0	1.0	1.0	1.0	1.0

Table IV-2. (Continued). Inhalation case. AGEDOS grid.

FIFTY-YEAR COMMITTED DOSE EQUIVALENT (NORMALIZED TO ADULT VALUE) FROM RADIONUCLIDE INHALATION

NUCLIDE	INTAKE MODE	AMAD	F1	AGE	EFFEC-TIVE	ADRENALS	BLADDER WALL	BRAIN	BONE SURFACE	BREAST	STOMACH WALL	SI WALL	ULI WALL	LLI WALL	KIDNEYS
PO-210	W	0.3	3.2E-01	0	20.	16.	16.	16.	94.	16.	16.	15.	15.	15.	16.
	W	0.3	3.0E-01	100	16.	13.	13.	13.	66.	13.	13.	13.	13.	13.	12.
	W	0.3	2.0E-01	365	7.2	7.0	7.0	7.0	19.	7.0	7.0	7.0	7.0	7.0	5.7
	W	0.3	1.4E-01	1825	3.5	3.5	3.5	3.5	5.0	3.5	3.5	3.5	3.5	3.5	2.8
	W	0.3	1.6E-01	3650	2.2	2.1	2.1	2.1	3.6	2.1	2.1	2.1	2.1	2.1	2.0
	W	0.3	1.8E-01	5475	1.6	1.3	1.3	1.3	2.6	1.3	1.3	1.3	1.3	1.3	1.5
	W	0.3	1.0E-01	7300	1.0	1.0	1.0	1.0	1.0	1.0	1.0	1.0	1.0	1.0	1.0
	W	1.0	3.2E-01	0	22.	17.	17.	17.	110.	17.	17.	17.	17.	17.	17.
	W	1.0	3.0E-01	100	17.	14.	14.	14.	75.	14.	14.	14.	14.	14.	14.
	W	1.0	2.0E-01	365	7.5	7.3	7.3	7.3	20.	7.3	7.3	7.3	7.3	7.2	6.0
	W	1.0	1.4E-01	1825	3.5	3.6	3.6	3.6	5.1	3.6	3.6	3.6	3.6	3.5	2.9
	W	1.0	1.6E-01	3650	2.3	2.2	2.2	2.2	3.7	2.2	2.2	2.2	2.2	2.1	2.0
	W	1.0	1.8E-01	5475	1.6	1.3	1.3	1.3	2.7	1.3	1.3	1.3	1.3	1.3	1.5
	W	1.0	1.0E-01	7300	1.0	1.0	1.0	1.0	1.0	1.0	1.0	1.0	1.0	1.0	1.0
	W	5.0	3.2E-01	0	28.	19.	19.	19.	120.	19.	19.	19.	19.	18.	20.
	W	5.0	3.0E-01	100	22.	16.	16.	16.	86.	16.	16.	16.	16.	15.	15.
	W	5.0	2.0E-01	365	8.4	7.8	7.8	7.8	21.	7.8	7.8	7.8	7.7	7.6	6.4
	W	5.0	1.4E-01	1825	3.7	3.7	3.7	3.7	5.3	3.7	3.7	3.7	3.7	3.6	3.0
	W	5.0	1.6E-01	3650	2.4	2.3	2.3	2.3	3.8	2.3	2.3	2.3	2.3	2.2	2.1
	W	5.0	1.8E-01	5475	1.7	1.4	1.4	1.4	2.9	1.4	1.4	1.4	1.4	1.3	1.6
	W	5.0	1.0E-01	7300	1.0	1.0	1.0	1.0	1.0	1.0	1.0	1.0	1.0	1.0	1.0
RA-226	W	0.3	6.4E-01	0	17.	10.	10.	10.	16.	10.	11.	10.	10.	10.	6.7
	W	0.3	6.0E-01	100	13.	8.8	8.9	8.8	12.	8.8	8.9	8.8	8.8	8.7	5.8
	W	0.3	4.0E-01	365	6.4	5.2	5.2	5.2	3.8	5.2	5.2	5.2	5.2	5.2	3.5
	W	0.3	2.8E-01	1825	3.1	2.5	2.5	2.5	1.3	2.5	2.5	2.5	2.5	2.6	1.4
	W	0.3	3.2E-01	3650	2.1	1.9	1.9	1.9	1.6	1.9	1.9	1.9	1.9	1.9	1.7
	W	0.3	3.6E-01	5475	1.6	1.8	1.8	1.8	2.7	1.8	1.8	1.8	1.8	1.7	1.7
	W	0.3	2.0E-01	7300	1.0	1.0	1.0	1.0	1.0	1.0	1.0	1.0	1.0	1.0	1.0
	W	1.0	6.4E-01	0	17.	10.	10.	10.	19.	10.	10.	10.	10.	10.	7.9
	W	1.0	6.0E-01	100	13.	8.8	8.9	8.8	14.	8.9	8.9	8.9	8.8	8.7	6.7
	W	1.0	4.0E-01	365	6.2	5.1	5.1	5.1	4.1	5.1	5.1	5.1	5.1	5.2	3.5
	W	1.0	2.8E-01	1825	3.0	2.4	2.5	2.4	1.3	2.5	2.5	2.5	2.5	2.6	1.5
	W	1.0	3.2E-01	3650	2.0	1.9	1.9	1.9	1.7	1.9	1.9	1.9	1.9	1.9	1.8
	W	1.0	3.6E-01	5475	1.7	2.0	2.0	2.0	2.8	2.0	2.0	2.0	1.9	1.8	2.0
	W	1.0	2.0E-01	7300	1.0	1.0	1.0	1.0	1.0	1.0	1.0	1.0	1.0	1.0	1.0
	W	5.0	6.4E-01	0	17.	11.	11.	11.	22.	11.	11.	11.	10.	10.	9.7
	W	5.0	6.0E-01	100	14.	9.1	9.1	9.1	16.	9.1	9.2	9.1	9.0	8.8	8.1
	W	5.0	4.0E-01	365	5.6	5.1	5.1	5.1	4.4	5.1	5.1	5.1	5.1	5.2	3.6
	W	5.0	2.8E-01	1825	2.4	2.4	2.4	2.4	1.4	2.4	2.4	2.4	2.5	2.6	1.6
	W	5.0	3.2E-01	3650	1.9	1.9	1.9	1.9	1.7	1.9	1.9	1.9	1.9	1.9	1.8
	W	5.0	3.6E-01	5475	2.1	2.3	2.3	2.3	3.0	2.3	2.3	2.3	2.2	2.0	2.3
	W	5.0	2.0E-01	7300	1.0	1.0	1.0	1.0	1.0	1.0	1.0	1.0	1.0	1.0	1.0

Table IV-2. (Continued). Inhalation case. AGEDOS grid.

FIFTY-YEAR COMMITTED DOSE EQUIVALENT (NORMALIZED TO ADULT VALUE) FROM RADIONUCLIDE INHALATION

NUCLIDE	INTAKE MODE	AMAD	F1	AGE	LIVER	LUNGS	OVARIES	PANCREAS	ACTIVE MARROW	SKIN	SPLEEN	TESTES	THYMUS	THYROID	UTERUS
PO-210	W	0.3	3.2E-01	0	18.	18.	16.	16.	34.	16.	23.	16.	16.	16.	16.
	W	0.3	3.0E-01	100	14.	14.	13.	13.	25.	13.	18.	13.	13.	13.	13.
	W	0.3	2.0E-01	365	7.1	6.8	7.0	7.0	7.4	7.0	8.2	7.0	7.0	7.0	7.0
	W	0.3	1.4E-01	1825	3.2	3.4	3.5	3.5	2.5	3.5	3.9	3.5	3.5	3.5	3.5
	W	0.3	1.6E-01	3650	2.2	2.2	2.1	2.1	1.8	2.1	2.5	2.1	2.1	2.1	2.1
	W	0.3	1.8E-01	5475	1.5	1.5	1.3	1.3	1.4	1.3	1.7	1.3	1.3	1.3	1.3
	W	0.3	1.0E-01	7300	1.0	1.0	1.0	1.0	1.0	1.0	1.0	1.0	1.0	1.0	1.0
	W	1.0	3.2E-01	0	20.	18.	17.	17.	38.	17.	25.	17.	17.	17.	17.
	W	1.0	3.0E-01	100	16.	14.	14.	14.	28.	14.	20.	14.	14.	14.	14.
	W	1.0	2.0E-01	365	7.4	6.8	7.3	7.3	7.8	7.3	8.5	7.3	7.3	7.3	7.3
	W	1.0	1.4E-01	1825	3.3	3.4	3.6	3.6	2.6	3.6	4.0	3.6	3.6	3.6	3.6
	W	1.0	1.6E-01	3650	2.3	2.2	2.2	2.2	1.9	2.2	2.6	2.2	2.2	2.2	2.2
	W	1.0	1.8E-01	5475	1.5	1.5	1.3	1.3	1.5	1.3	1.7	1.3	1.3	1.3	1.3
	W	1.0	1.0E-01	7300	1.0	1.0	1.0	1.0	1.0	1.0	1.0	1.0	1.0	1.0	1.0
	W	5.0	3.2E-01	0	22.	18.	19.	19.	44.	19.	29.	19.	19.	19.	19.
	W	5.0	3.0E-01	100	18.	14.	16.	16.	33.	16.	22.	16.	16.	16.	16.
	W	5.0	2.0E-01	365	7.9	6.9	7.8	7.8	8.3	7.8	9.1	7.8	7.8	7.8	7.8
	W	5.0	1.4E-01	1825	3.4	3.4	3.7	3.7	2.6	3.7	4.1	3.7	3.7	3.7	3.7
	W	5.0	1.6E-01	3650	2.4	2.2	2.3	2.3	2.0	2.3	2.7	2.3	2.3	2.3	2.3
	W	5.0	1.8E-01	5475	1.6	1.5	1.4	1.4	1.5	1.4	1.8	1.4	1.4	1.4	1.4
	W	5.0	1.0E-01	7300	1.0	1.0	1.0	1.0	1.0	1.0	1.0	1.0	1.0	1.0	1.0
RA-226	W	0.3	6.4E-01	0	20.	17.	10.	10.	8.9	57.	9.4	10.	10.	10.	10.
	W	0.3	6.0E-01	100	16.	14.	8.8	8.8	7.2	48.	7.6	8.8	8.9	8.9	8.9
	W	0.3	4.0E-01	365	7.2	6.8	5.2	5.2	2.6	28.	3.6	5.2	5.2	5.2	5.2
	W	0.3	2.8E-01	1825	3.0	3.4	2.5	2.5	1.1	3.2	2.2	2.5	2.5	2.5	2.5
	W	0.3	3.2E-01	3650	2.3	2.2	1.9	1.9	1.1	2.2	2.0	1.9	1.9	1.9	1.9
	W	0.3	3.6E-01	5475	1.7	1.5	1.8	1.8	1.4	1.8	2.3	1.8	1.8	1.8	1.8
	W	0.3	2.0E-01	7300	1.0	1.0	1.0	1.0	1.0	1.0	1.0	1.0	1.0	1.0	1.0
	W	1.0	6.4E-01	0	22.	17.	10.	10.	10.	50.	10.	10.	10.	10.	10.
	W	1.0	6.0E-01	100	18.	14.	8.9	8.9	8.2	43.	8.4	8.9	8.9	8.9	8.9
	W	1.0	4.0E-01	365	7.6	6.8	5.1	5.1	2.8	25.	3.7	5.1	5.1	5.1	5.1
	W	1.0	2.8E-01	1825	3.1	3.4	2.5	2.5	1.1	3.2	2.3	2.5	2.5	2.5	2.5
	W	1.0	3.2E-01	3650	2.4	2.2	1.9	1.9	1.1	2.2	2.1	1.9	1.9	1.9	1.9
	W	1.0	3.6E-01	5475	1.8	1.5	2.0	2.0	1.4	2.0	2.4	2.0	2.0	2.0	2.0
	W	1.0	2.0E-01	7300	1.0	1.0	1.0	1.0	1.0	1.0	1.0	1.0	1.0	1.0	1.0
	W	5.0	6.4E-01	0	26.	17.	11.	11.	12.	41.	12.	11.	11.	11.	11.
	W	5.0	6.0E-01	100	21.	13.	9.1	9.1	9.5	35.	9.6	9.1	9.1	9.1	9.1
	W	5.0	4.0E-01	365	8.3	6.7	5.1	5.1	3.0	20.	3.9	5.1	5.1	5.1	5.1
	W	5.0	2.8E-01	1825	3.3	3.4	2.4	2.4	1.1	3.3	2.3	2.4	2.4	2.4	2.4
	W	5.0	3.2E-01	3650	2.5	2.2	1.9	1.9	1.1	2.3	2.1	1.9	1.9	1.9	1.9
	W	5.0	3.6E-01	5475	1.9	1.5	2.3	2.3	1.5	2.3	2.6	2.3	2.3	2.3	2.3
	W	5.0	2.0E-01	7300	1.0	1.0	1.0	1.0	1.0	1.0	1.0	1.0	1.0	1.0	1.0

Table IV-2. (Continued). Inhalation case. AGEDOS grid.

FIFTY-YEAR COMMITTED DOSE EQUIVALENT (NORMALIZED TO ADULT VALUE) FROM RADIONUCLIDE INHALATION

NUCLIDE	INTAKE MODE	AMAD	F1	AGE	EFFEC-TIVE	ADRENALS	BLADDER WALL	BRAIN	BONE SURFACE	BREAST	STOMACH WALL	SI WALL	ULI WALL	LLI WALL	KIDNEYS
RA-228	W	0.3	6.4E-01	0	7.0	3.0	2.9	2.9	3.0	3.0	3.0	3.0	3.0	3.2	3.0
	W	0.3	6.0E-01	100	5.8	2.9	2.8	2.8	2.8	2.9	2.9	2.9	2.9	3.0	2.7
	W	0.3	4.0E-01	365	3.9	2.7	2.6	2.6	2.3	2.7	2.6	2.6	2.7	2.7	2.3
	W	0.3	2.8E-01	1825	2.1	1.7	1.7	1.7	1.3	1.7	1.7	1.7	1.7	1.7	1.5
	W	0.3	3.2E-01	3650	1.5	1.1	1.1	1.1	1.2	1.1	1.1	1.1	1.1	1.1	1.1
	W	0.3	3.6E-01	5475	1.3	0.88	0.87	0.88	1.2	0.88	0.87	0.87	0.87	0.88	1.0
	W	0.3	2.0E-01	7300	1.0	1.0	1.0	1.0	1.0	1.0	1.0	1.0	1.0	1.0	1.0
	W	1.0	6.4E-01	0	6.6	3.4	3.3	3.3	3.4	3.4	3.4	3.4	3.5	3.6	3.4
	W	1.0	6.0E-01	100	5.5	3.3	3.2	3.2	3.2	3.2	3.3	3.3	3.3	3.5	3.0
	W	1.0	4.0E-01	365	3.7	3.0	3.0	3.0	2.5	3.0	3.0	3.0	3.0	3.1	2.5
	W	1.0	2.8E-01	1825	2.0	1.8	1.8	1.8	1.4	1.8	1.8	1.8	1.9	1.9	1.6
	W	1.0	3.2E-01	3650	1.5	1.2	1.2	1.2	1.2	1.2	1.2	1.2	1.2	1.2	1.2
	W	1.0	3.6E-01	5475	1.3	0.94	0.93	0.94	1.4	0.94	0.93	0.93	0.93	0.94	1.1
	W	1.0	2.0E-01	7300	1.0	1.0	1.0	1.0	1.0	1.0	1.0	1.0	1.0	1.0	1.0
	W	5.0	6.4E-01	0	5.6	4.3	4.3	4.3	4.2	4.3	4.3	4.3	4.5	4.6	4.3
	W	5.0	6.0E-01	100	5.0	4.2	4.1	4.1	4.0	4.1	4.2	4.2	4.3	4.4	3.8
	W	5.0	4.0E-01	365	3.4	3.8	3.8	3.8	2.8	3.8	3.8	3.8	3.8	3.9	3.0
	W	5.0	2.8E-01	1825	1.8	2.2	2.2	2.2	1.4	2.2	2.2	2.2	2.2	2.3	1.8
	W	5.0	3.2E-01	3650	1.5	1.4	1.4	1.4	1.4	1.4	1.4	1.4	1.4	1.4	1.4
	W	5.0	3.6E-01	5475	1.5	1.1	1.1	1.1	1.7	1.1	1.1	1.1	1.1	1.1	1.2
	W	5.0	2.0E-01	7300	1.0	1.0	1.0	1.0	1.0	1.0	1.0	1.0	1.0	1.0	1.0
TH-228	W	0.3	1.0E-02	0	13.	3.8	3.8	3.8	9.9	3.8	3.8	3.8	3.9	4.0	4.6
	W	0.3	5.0E-03	100	10.	3.4	3.4	3.4	7.7	3.4	3.4	3.4	3.4	3.5	3.9
	W	0.3	5.0E-04	365	6.1	2.8	2.8	2.8	5.5	2.8	2.8	2.8	2.8	2.9	3.1
	W	0.3	5.0E-04	1825	3.0	1.7	1.7	1.7	2.6	1.7	1.7	1.7	1.7	1.7	1.9
	W	0.3	5.0E-04	3650	1.8	1.0	1.0	1.0	1.6	1.0	1.0	1.0	1.0	1.1	1.3
	W	0.3	5.0E-04	5475	1.2	0.81	0.81	0.81	1.1	0.81	0.81	0.81	0.81	0.81	0.99
	W	0.3	2.0E-04	7300	1.0	1.0	1.0	1.0	1.0	1.0	1.0	1.0	1.0	1.0	1.0
	W	1.0	1.0E-02	0	12.	3.9	3.9	3.9	10.	3.9	3.9	3.9	4.0	4.1	4.7
	W	1.0	5.0E-03	100	9.7	3.4	3.4	3.4	8.0	3.4	3.4	3.4	3.5	3.6	4.0
	W	1.0	5.0E-04	365	6.0	2.8	2.8	2.8	5.5	2.8	2.8	2.8	2.8	2.9	3.1
	W	1.0	5.0E-04	1825	2.9	1.7	1.7	1.7	2.6	1.7	1.7	1.7	1.7	1.7	1.9
	W	1.0	5.0E-04	3650	1.8	1.0	1.0	1.0	1.6	1.0	1.0	1.0	1.0	1.1	1.3
	W	1.0	5.0E-04	5475	1.2	0.80	0.80	0.80	1.1	0.80	0.80	0.80	0.81	0.81	0.99
	W	1.0	2.0E-04	7300	1.0	1.0	1.0	1.0	1.0	1.0	1.0	1.0	1.0	1.0	1.0
	W	5.0	1.0E-02	0	12.	4.0	4.0	4.0	11.	4.0	4.0	4.0	4.1	4.3	4.9
	W	5.0	5.0E-03	100	9.1	3.5	3.5	3.5	8.3	3.5	3.5	3.5	3.5	3.7	4.1
	W	5.0	5.0E-04	365	5.9	2.8	2.8	2.8	5.5	2.8	2.8	2.8	2.8	2.9	3.1
	W	5.0	5.0E-04	1825	2.8	1.7	1.7	1.7	2.6	1.7	1.7	1.7	1.7	1.8	1.9
	W	5.0	5.0E-04	3650	1.7	1.0	1.0	1.0	1.6	1.0	1.0	1.0	1.1	1.1	1.3
	W	5.0	5.0E-04	5475	1.2	0.80	0.80	0.80	1.1	0.80	0.80	0.80	0.80	0.81	0.99
	W	5.0	2.0E-04	7300	1.0	1.0	1.0	1.0	1.0	1.0	1.0	1.0	1.0	1.0	1.0

Table IV-2. (Continued). Inhalation case. AGEDOS grid.

FIFTY-YEAR COMMITTED DOSE EQUIVALENT (NORMALIZED TO ADULT VALUE) FROM RADIONUCLIDE INHALATION

NUCLIDE	INTAKE MODE	AMAD	F1	AGE	LIVER	LUNGS	OVARIES	PANCREAS	ACTIVE MARROW	SKIN	SPLEEN	TESTES	THYMUS	THYROID	UTERUS
RA-228	W	0.3	6.4E-01	0	4.1	14.	2.9	3.0	2.7	2.9	5.4	2.9	2.9	3.0	2.9
	W	0.3	6.0E-01	100	3.7	11.	2.8	2.9	2.7	2.8	4.8	2.8	2.8	2.9	2.8
	W	0.3	4.0E-01	365	3.1	6.5	2.6	2.6	2.3	2.6	3.9	2.6	2.6	2.6	2.6
	W	0.3	2.8E-01	1825	1.8	3.3	1.7	1.7	1.5	1.7	2.3	1.7	1.7	1.7	1.7
	W	0.3	3.2E-01	3650	1.3	2.1	1.1	1.1	1.1	1.1	1.6	1.1	1.1	1.1	1.1
	W	0.3	3.6E-01	5475	1.0	1.5	0.87	0.88	1.0	0.87	1.1	0.87	0.87	0.87	0.87
	W	0.3	2.0E-01	7300	1.0	1.0	1.0	1.0	1.0	1.0	1.0	1.0	1.0	1.0	1.0
	W	1.0	6.4E-01	0	4.6	14.	3.3	3.4	2.8	3.4	6.0	3.3	3.3	3.4	3.3
	W	1.0	6.0E-01	100	4.1	11.	3.2	3.2	2.7	3.2	5.3	3.2	3.2	3.2	3.2
	W	1.0	4.0E-01	365	3.3	6.5	3.0	3.0	2.3	3.0	4.1	3.0	3.0	3.0	3.0
	W	1.0	2.8E-01	1825	1.9	3.3	1.8	1.8	1.4	1.8	2.4	1.8	1.8	1.8	1.8
	W	1.0	3.2E-01	3650	1.4	2.1	1.2	1.2	1.1	1.2	1.6	1.2	1.2	1.2	1.2
	W	1.0	3.6E-01	5475	1.1	1.5	0.93	0.94	1.1	0.93	1.2	0.93	0.93	0.93	0.93
	W	1.0	2.0E-01	7300	1.0	1.0	1.0	1.0	1.0	1.0	1.0	1.0	1.0	1.0	1.0
	W	5.0	6.4E-01	0	6.0	14.	4.3	4.3	3.0	4.3	7.6	4.3	4.3	4.3	4.3
	W	5.0	6.0E-01	100	5.3	11.	4.1	4.2	3.0	4.1	6.6	4.1	4.1	4.2	4.1
	W	5.0	4.0E-01	365	4.0	6.4	3.8	3.8	2.3	3.8	4.8	3.8	3.8	3.8	3.8
	W	5.0	2.8E-01	1825	2.2	3.2	2.2	2.2	1.3	2.2	2.7	2.2	2.2	2.2	2.2
	W	5.0	3.2E-01	3650	1.6	2.1	1.4	1.4	1.1	1.4	1.8	1.4	1.4	1.4	1.4
	W	5.0	3.6E-01	5475	1.2	1.5	1.1	1.1	1.2	1.1	1.3	1.1	1.1	1.1	1.1
	W	5.0	2.0E-01	7300	1.0	1.0	1.0	1.0	1.0	1.0	1.0	1.0	1.0	1.0	1.0
TH-228	W	0.3	1.0E-02	0	5.9	17.	3.8	3.8	16.	3.8	8.6	3.8	3.8	3.8	3.8
	W	0.3	5.0E-03	100	5.0	13.	3.4	3.4	12.	3.4	7.2	3.4	3.4	3.4	3.4
	W	0.3	5.0E-04	365	4.0	6.7	2.8	2.8	8.2	2.8	5.4	2.8	2.8	2.8	2.8
	W	0.3	5.0E-04	1825	2.2	3.3	1.7	1.7	3.8	1.7	3.0	1.7	1.7	1.7	1.7
	W	0.3	5.0E-04	3650	1.4	2.1	1.0	1.0	1.9	1.0	1.8	1.0	1.0	1.0	1.0
	W	0.3	5.0E-04	5475	1.0	1.5	0.81	0.81	1.2	0.81	1.2	0.81	0.81	0.81	0.81
	W	0.3	2.0E-04	7300	1.0	1.0	1.0	1.0	1.0	1.0	1.0	1.0	1.0	1.0	1.0
	W	1.0	1.0E-02	0	6.1	16.	3.9	3.9	17.	3.9	9.0	3.9	3.9	3.9	3.9
	W	1.0	5.0E-03	100	5.1	13.	3.4	3.4	12.	3.4	7.4	3.4	3.4	3.4	3.4
	W	1.0	5.0E-04	365	4.0	6.6	2.8	2.8	8.3	2.8	5.4	2.8	2.8	2.8	2.8
	W	1.0	5.0E-04	1825	2.2	3.3	1.7	1.7	3.8	1.7	3.0	1.7	1.7	1.7	1.7
	W	1.0	5.0E-04	3650	1.4	2.1	1.0	1.0	1.9	1.0	1.8	1.0	1.0	1.0	1.0
	W	1.0	5.0E-04	5475	1.0	1.5	0.80	0.80	1.2	0.80	1.2	0.80	0.80	0.80	0.80
	W	1.0	2.0E-04	7300	1.0	1.0	1.0	1.0	1.0	1.0	1.0	1.0	1.0	1.0	1.0
	W	5.0	1.0E-02	0	6.3	15.	4.0	4.0	18.	4.0	9.4	4.0	4.0	4.0	4.0
	W	5.0	5.0E-03	100	5.3	12.	3.5	3.5	13.	3.5	7.6	3.5	3.5	3.5	3.5
	W	5.0	5.0E-04	365	4.0	6.3	2.8	2.8	8.3	2.8	5.5	2.8	2.8	2.8	2.8
	W	5.0	5.0E-04	1825	2.2	3.2	1.7	1.7	3.8	1.7	3.0	1.7	1.7	1.7	1.7
	W	5.0	5.0E-04	3650	1.4	2.0	1.0	1.0	1.9	1.0	1.8	1.0	1.0	1.0	1.0
	W	5.0	5.0E-04	5475	1.0	1.4	0.80	0.80	1.2	0.80	1.2	0.80	0.80	0.80	0.80
	W	5.0	2.0E-04	7300	1.0	1.0	1.0	1.0	1.0	1.0	1.0	1.0	1.0	1.0	1.0

Table IV-2. (Continued). Inhalation case. AGEDOS grid.

FIFTY-YEAR COMMITTED DOSE EQUIVALENT (NORMALIZED TO ADULT VALUE) FROM RADIONUCLIDE INHALATION

NUCLIDE	INTAKE MODE	AMAD	F1	AGE	EFFEC-TIVE	ADRENALS	BLADDER WALL	BRAIN	BONE SURFACE	BREAST	STOMACH WALL	SI WALL	ULI WALL	LLI WALL	KIDNEYS
TH-228	Y	0.3	1.0E-02	0	9.7	3.5	3.4	3.4	7.3	3.5	3.4	3.4	3.6	4.2	3.9
	Y	0.3	5.0E-03	100	8.0	3.0	2.9	2.9	5.8	3.0	3.0	3.0	3.1	3.6	3.3
	Y	0.3	5.0E-04	365	5.7	2.5	2.4	2.4	4.3	2.5	2.4	2.4	2.5	2.7	2.6
	Y	0.3	5.0E-04	1825	3.0	1.5	1.5	1.5	2.3	1.6	1.5	1.5	1.6	1.7	1.7
	Y	0.3	5.0E-04	3650	2.0	1.0	0.98	0.98	1.5	1.0	0.98	0.98	1.0	1.1	1.2
	Y	0.3	5.0E-04	5475	1.4	0.91	0.90	0.90	1.1	0.91	0.90	0.90	0.91	0.92	1.0
	Y	0.3	2.0E-04	7300	1.0	1.0	1.0	1.0	1.0	1.0	1.0	1.0	1.0	1.0	1.0
	Y	1.0	1.0E-02	0	9.9	4.1	4.0	4.0	9.4	4.1	4.1	4.1	4.4	5.4	4.7
	Y	1.0	5.0E-03	100	8.1	3.4	3.3	3.3	6.8	3.3	3.3	3.3	3.6	4.4	3.7
	Y	1.0	5.0E-04	365	5.7	2.5	2.5	2.5	4.5	2.5	2.5	2.5	2.6	3.0	2.7
	Y	1.0	5.0E-04	1825	3.0	1.6	1.5	1.5	2.4	1.6	1.6	1.6	1.6	1.8	1.7
	Y	1.0	5.0E-04	3650	2.0	1.0	1.0	1.0	1.5	1.0	1.0	1.0	1.0	1.1	1.2
	Y	1.0	5.0E-04	5475	1.4	0.90	0.89	0.89	1.1	0.90	0.89	0.89	0.90	0.92	1.0
	Y	1.0	2.0E-04	7300	1.0	1.0	1.0	1.0	1.0	1.0	1.0	1.0	1.0	1.0	1.0
	Y	5.0	1.0E-02	0	11.	6.0	6.0	6.0	15.	6.0	6.0	6.1	6.6	8.3	7.2
	Y	5.0	5.0E-03	100	8.4	4.4	4.3	4.3	9.7	4.4	4.4	4.4	4.9	6.4	5.0
	Y	5.0	5.0E-04	365	5.7	2.8	2.8	2.8	5.2	2.8	2.8	2.8	3.0	3.7	3.0
	Y	5.0	5.0E-04	1825	3.0	1.7	1.7	1.7	2.6	1.7	1.7	1.7	1.8	2.1	1.8
	Y	5.0	5.0E-04	3650	2.0	1.1	1.1	1.1	1.6	1.1	1.1	1.1	1.1	1.3	1.3
	Y	5.0	5.0E-04	5475	1.4	0.87	0.86	0.86	1.1	0.87	0.87	0.87	0.88	0.93	1.0
	Y	5.0	2.0E-04	7300	1.0	1.0	1.0	1.0	1.0	1.0	1.0	1.0	1.0	1.0	1.0
TH-230	W	0.3	1.0E-02	0	2.1	4.3	4.3	4.3	1.4	4.3	4.3	4.3	4.3	4.4	5.2
	W	0.3	5.0E-03	100	1.9	3.8	3.8	3.8	1.2	3.8	3.8	3.8	3.8	3.9	4.6
	W	0.3	5.0E-04	365	1.5	3.1	3.1	3.1	1.1	3.1	3.1	3.1	3.1	3.1	3.8
	W	0.3	5.0E-04	1825	1.1	1.8	1.8	1.8	0.95	1.8	1.8	1.8	1.8	1.9	2.4
	W	0.3	5.0E-04	3650	0.99	1.2	1.2	1.2	0.90	1.2	1.2	1.2	1.2	1.2	1.5
	W	0.3	5.0E-04	5475	0.91	0.92	0.92	0.92	0.88	0.92	0.92	0.92	0.92	0.92	1.1
	W	0.3	2.0E-04	7300	1.0	1.0	1.0	1.0	1.0	1.0	1.0	1.0	1.0	1.0	1.0
	W	1.0	1.0E-02	0	2.0	4.4	4.4	4.4	1.4	4.4	4.4	4.4	4.5	4.6	5.4
	W	1.0	5.0E-03	100	1.8	3.9	3.9	3.9	1.3	3.9	3.9	3.9	3.9	4.0	4.7
	W	1.0	5.0E-04	365	1.5	3.1	3.1	3.1	1.1	3.1	3.1	3.1	3.1	3.2	3.9
	W	1.0	5.0E-04	1825	1.1	1.8	1.8	1.8	0.95	1.8	1.8	1.8	1.9	1.9	2.4
	W	1.0	5.0E-04	3650	0.98	1.2	1.2	1.2	0.90	1.2	1.2	1.2	1.2	1.3	1.6
	W	1.0	5.0E-04	5475	0.91	0.91	0.91	0.91	0.88	0.91	0.91	0.91	0.92	0.92	1.1
	W	1.0	2.0E-04	7300	1.0	1.0	1.0	1.0	1.0	1.0	1.0	1.0	1.0	1.0	1.0
	W	5.0	1.0E-02	0	1.9	4.6	4.6	4.6	1.4	4.6	4.6	4.6	4.7	4.9	5.6
	W	5.0	5.0E-03	100	1.7	4.0	4.0	4.0	1.3	4.0	4.0	4.0	4.0	4.2	4.9
	W	5.0	5.0E-04	365	1.4	3.1	3.1	3.1	1.1	3.1	3.1	3.1	3.2	3.2	3.9
	W	5.0	5.0E-04	1825	1.1	1.9	1.9	1.9	0.95	1.9	1.9	1.9	1.9	1.9	2.4
	W	5.0	5.0E-04	3650	0.96	1.2	1.2	1.2	0.90	1.2	1.2	1.2	1.2	1.3	1.6
	W	5.0	5.0E-04	5475	0.89	0.91	0.91	0.91	0.88	0.91	0.91	0.91	0.91	0.92	1.1
	W	5.0	2.0E-04	7300	1.0	1.0	1.0	1.0	1.0	1.0	1.0	1.0	1.0	1.0	1.0

Table IV-2. (Continued). Inhalation case. AGEDOS grid.

FIFTY-YEAR COMMITTED DOSE EQUIVALENT (NORMALIZED TO ADULT VALUE) FROM RADIONUCLIDE INHALATION

NUCLIDE	INTAKE MODE	AMAD	F1	AGE	LIVER	LUNGS	OVARIES	PANCREAS	ACTIVE MARROW	SKIN	SPLEEN	TESTES	THYMUS	THYROID	UTERUS
TH-228	Y	0.3	1.0E-02	0	4.9	9.9	3.4	3.4	11.	3.4	6.8	3.4	3.4	3.4	3.4
	Y	0.3	5.0E-03	100	4.1	8.2	2.9	3.0	8.6	2.9	5.6	2.9	2.9	3.0	2.9
	Y	0.3	5.0E-04	365	3.2	5.7	2.4	2.4	6.3	2.4	4.4	2.4	2.4	2.4	2.4
	Y	0.3	5.0E-04	1825	2.0	3.1	1.5	1.5	3.2	1.5	2.6	1.5	1.5	1.5	1.5
	Y	0.3	5.0E-04	3650	1.3	2.0	0.98	0.99	1.7	0.98	1.6	0.98	0.99	0.99	0.98
	Y	0.3	5.0E-04	5475	1.0	1.4	0.90	0.91	1.1	0.90	1.1	0.90	0.91	0.90	0.90
	Y	0.3	2.0E-04	7300	1.0	1.0	1.0	1.0	1.0	1.0	1.0	1.0	1.0	1.0	1.0
	Y	1.0	1.0E-02	0	6.0	9.9	4.0	4.1	14.	4.0	8.4	4.0	4.0	4.1	4.0
	Y	1.0	5.0E-03	100	4.7	8.2	3.3	3.3	10.	3.3	6.5	3.3	3.3	3.3	3.3
	Y	1.0	5.0E-04	365	3.4	5.7	2.5	2.5	6.7	2.5	4.6	2.5	2.5	2.5	2.5
	Y	1.0	5.0E-04	1825	2.0	3.1	1.5	1.6	3.3	1.5	2.7	1.5	1.6	1.6	1.5
	Y	1.0	5.0E-04	3650	1.3	2.0	1.0	1.0	1.7	1.0	1.6	1.0	1.0	1.0	1.0
	Y	1.0	5.0E-04	5475	1.0	1.4	0.89	0.90	1.1	0.89	1.1	0.89	0.90	0.89	0.89
	Y	1.0	2.0E-04	7300	1.0	1.0	1.0	1.0	1.0	1.0	1.0	1.0	1.0	1.0	1.0
	Y	5.0	1.0E-02	0	9.1	9.9	6.0	6.0	24.	6.0	13.	6.0	5.9	6.0	6.0
	Y	5.0	5.0E-03	100	6.3	8.2	4.3	4.3	14.	4.3	8.9	4.3	4.3	4.3	4.3
	Y	5.0	5.0E-04	365	3.8	5.7	2.8	2.8	7.6	2.8	5.2	2.8	2.8	2.8	2.8
	Y	5.0	5.0E-04	1825	2.2	3.1	1.7	1.7	3.6	1.7	2.9	1.7	1.7	1.7	1.7
	Y	5.0	5.0E-04	3650	1.4	2.0	1.1	1.1	1.9	1.1	1.7	1.1	1.1	1.1	1.1
	Y	5.0	5.0E-04	5475	1.0	1.4	0.86	0.86	1.2	0.86	1.2	0.86	0.87	0.86	0.86
	Y	5.0	2.0E-04	7300	1.0	1.0	1.0	1.0	1.0	1.0	1.0	1.0	1.0	1.0	1.0
TH-230	W	0.3	1.0E-02	0	6.0	16.	4.3	4.3	3.7	4.3	7.0	4.3	4.3	4.3	4.3
	W	0.3	5.0E-03	100	5.3	13.	3.8	3.8	3.3	3.8	6.2	3.8	3.8	3.8	3.8
	W	0.3	5.0E-04	365	4.4	6.6	3.1	3.1	2.8	3.1	5.0	3.1	3.1	3.1	3.1
	W	0.3	5.0E-04	1825	2.6	3.3	1.8	1.8	1.8	1.8	2.9	1.8	1.8	1.8	1.8
	W	0.3	5.0E-04	3650	1.6	2.1	1.2	1.2	1.2	1.2	1.7	1.2	1.2	1.2	1.2
	W	0.3	5.0E-04	5475	1.1	1.5	0.92	0.92	0.97	0.92	1.1	0.92	0.92	0.92	0.92
	W	0.3	2.0E-04	7300	1.0	1.0	1.0	1.0	1.0	1.0	1.0	1.0	1.0	1.0	1.0
	W	1.0	1.0E-02	0	6.2	16.	4.4	4.4	3.8	4.4	7.3	4.4	4.4	4.4	4.4
	W	1.0	5.0E-03	100	5.4	13.	3.9	3.9	3.3	3.9	6.3	3.9	3.9	3.9	3.9
	W	1.0	5.0E-04	365	4.4	6.4	3.1	3.1	2.8	3.1	5.1	3.1	3.1	3.1	3.1
	W	1.0	5.0E-04	1825	2.6	3.3	1.8	1.8	1.8	1.8	2.9	1.8	1.8	1.8	1.8
	W	1.0	5.0E-04	3650	1.6	2.1	1.2	1.2	1.2	1.2	1.7	1.2	1.2	1.2	1.2
	W	1.0	5.0E-04	5475	1.1	1.5	0.91	0.91	0.96	0.91	1.1	0.91	0.91	0.91	0.91
	W	1.0	2.0E-04	7300	1.0	1.0	1.0	1.0	1.0	1.0	1.0	1.0	1.0	1.0	1.0
	W	5.0	1.0E-02	0	6.4	14.	4.6	4.6	4.0	4.6	7.6	4.6	4.6	4.6	4.6
	W	5.0	5.0E-03	100	5.6	11.	4.0	4.0	3.4	4.0	6.5	4.0	4.0	4.0	4.0
	W	5.0	5.0E-04	365	4.5	5.9	3.1	3.1	2.8	3.1	5.1	3.1	3.1	3.1	3.1
	W	5.0	5.0E-04	1825	2.6	3.0	1.9	1.9	1.8	1.9	2.9	1.9	1.9	1.9	1.9
	W	5.0	5.0E-04	3650	1.6	2.0	1.2	1.2	1.2	1.2	1.8	1.2	1.2	1.2	1.2
	W	5.0	5.0E-04	5475	1.1	1.4	0.91	0.91	0.96	0.91	1.1	0.91	0.91	0.91	0.91
	W	5.0	2.0E-04	7300	1.0	1.0	1.0	1.0	1.0	1.0	1.0	1.0	1.0	1.0	1.0

Table IV-2. (Continued). Inhalation case. AGEDOS grid.

FIFTY-YEAR COMMITTED DOSE EQUIVALENT (NORMALIZED TO ADULT VALUE) FROM RADIONUCLIDE INHALATION

NUCLIDE	INTAKE MODE	AMAD	F1	AGE	EFFEC-TIVE	ADRENALS	BLADDER WALL	BRAIN	BONE SURFACE	BREAST	STOMACH WALL	SI WALL	ULI WALL	LLI WALL	KIDNEYS
TH-230	Y	0.3	1.0E-02	0	3.4	2.5	2.5	2.5	1.1	2.5	2.5	2.5	2.6	2.8	3.1
	Y	0.3	5.0E-03	100	3.0	2.3	2.3	2.3	1.0	2.3	2.3	2.3	2.4	2.5	2.9
	Y	0.3	5.0E-04	365	2.4	2.0	2.0	2.0	0.98	2.0	2.0	2.0	2.0	2.1	2.5
	Y	0.3	5.0E-04	1825	1.6	1.4	1.4	1.4	0.93	1.4	1.4	1.4	1.4	1.4	1.8
	Y	0.3	5.0E-04	3650	1.3	1.1	1.1	1.1	0.95	1.1	1.1	1.1	1.1	1.1	1.3
	Y	0.3	5.0E-04	5475	1.1	0.99	0.99	0.99	0.98	0.99	0.99	0.99	0.99	1.0	1.0
	Y	0.3	2.0E-04	7300	1.0	1.0	1.0	1.0	1.0	1.0	1.0	1.0	1.0	1.0	1.0
	Y	1.0	1.0E-02	0	3.4	2.9	2.9	2.9	1.2	2.9	2.9	2.9	3.1	3.4	3.6
	Y	1.0	5.0E-03	100	3.0	2.5	2.5	2.5	1.1	2.5	2.5	2.5	2.7	3.0	3.1
	Y	1.0	5.0E-04	365	2.4	2.1	2.1	2.1	1.0	2.1	2.1	2.1	2.1	2.3	2.6
	Y	1.0	5.0E-04	1825	1.6	1.4	1.4	1.4	0.93	1.4	1.4	1.4	1.5	1.5	1.8
	Y	1.0	5.0E-04	3650	1.3	1.1	1.1	1.1	0.95	1.1	1.1	1.1	1.1	1.1	1.3
	Y	1.0	5.0E-04	5475	1.1	0.99	0.99	0.99	0.98	0.99	0.99	0.99	0.99	1.0	1.1
	Y	1.0	2.0E-04	7300	1.0	1.0	1.0	1.0	1.0	1.0	1.0	1.0	1.0	1.0	1.0
	Y	5.0	1.0E-02	0	3.4	4.5	4.5	4.5	1.6	4.5	4.6	4.6	5.1	6.2	5.6
	Y	5.0	5.0E-03	100	2.8	3.4	3.4	3.4	1.3	3.4	3.5	3.5	3.9	4.8	4.2
	Y	5.0	5.0E-04	365	2.2	2.4	2.4	2.4	1.1	2.4	2.4	2.4	2.6	3.0	3.0
	Y	5.0	5.0E-04	1825	1.5	1.6	1.6	1.6	0.95	1.6	1.6	1.6	1.7	1.8	2.0
	Y	5.0	5.0E-04	3650	1.2	1.2	1.2	1.2	0.94	1.2	1.2	1.2	1.2	1.3	1.4
	Y	5.0	5.0E-04	5475	1.0	0.97	0.97	0.97	0.95	0.97	0.97	0.98	0.99	1.0	1.1
	Y	5.0	2.0E-04	7300	1.0	1.0	1.0	1.0	1.0	1.0	1.0	1.0	1.0	1.0	1.0
TH-232	W	0.3	1.0E-02	0	2.2	3.2	3.2	3.2	1.6	3.2	3.2	3.2	3.2	3.3	4.1
	W	0.3	5.0E-03	100	2.0	2.9	2.9	2.9	1.4	2.9	2.9	2.9	2.9	3.0	3.7
	W	0.3	5.0E-04	365	1.7	2.5	2.5	2.5	1.3	2.5	2.5	2.5	2.5	2.5	3.2
	W	0.3	5.0E-04	1825	1.3	1.8	1.8	1.8	1.1	1.8	1.8	1.8	1.8	1.8	2.2
	W	0.3	5.0E-04	3650	1.1	1.4	1.4	1.4	0.98	1.4	1.4	1.4	1.4	1.4	1.6
	W	0.3	5.0E-04	5475	0.96	1.0	1.0	1.0	0.94	1.0	1.0	1.0	1.0	1.0	1.1
	W	0.3	2.0E-04	7300	1.0	1.0	1.0	1.0	1.0	1.0	1.0	1.0	1.0	1.0	1.0
	W	1.0	1.0E-02	0	2.2	3.2	3.3	3.2	1.6	3.2	3.3	3.3	3.3	3.4	4.2
	W	1.0	5.0E-03	100	2.0	2.9	3.0	2.9	1.5	2.9	3.0	3.0	3.0	3.0	3.8
	W	1.0	5.0E-04	365	1.7	2.5	2.5	2.5	1.3	2.5	2.5	2.5	2.5	2.6	3.2
	W	1.0	5.0E-04	1825	1.2	1.8	1.8	1.8	1.1	1.8	1.8	1.8	1.8	1.8	2.2
	W	1.0	5.0E-04	3650	1.1	1.4	1.4	1.4	0.98	1.4	1.4	1.4	1.4	1.4	1.6
	W	1.0	5.0E-04	5475	0.96	1.0	1.0	1.0	0.94	1.0	1.0	1.0	1.0	1.0	1.1
	W	1.0	2.0E-04	7300	1.0	1.0	1.0	1.0	1.0	1.0	1.0	1.0	1.0	1.0	1.0
	W	5.0	1.0E-02	0	2.1	3.3	3.4	3.3	1.6	3.4	3.4	3.4	3.4	3.5	4.4
	W	5.0	5.0E-03	100	1.9	3.0	3.0	3.0	1.5	3.0	3.0	3.0	3.1	3.1	3.9
	W	5.0	5.0E-04	365	1.6	2.5	2.6	2.5	1.3	2.5	2.6	2.6	2.6	2.6	3.2
	W	5.0	5.0E-04	1825	1.2	1.8	1.8	1.8	1.1	1.8	1.8	1.8	1.8	1.8	2.2
	W	5.0	5.0E-04	3650	1.1	1.4	1.4	1.4	0.99	1.4	1.4	1.4	1.4	1.4	1.6
	W	5.0	5.0E-04	5475	0.95	1.0	1.0	1.0	0.94	1.0	1.0	1.0	1.0	1.0	1.1
	W	5.0	2.0E-04	7300	1.0	1.0	1.0	1.0	1.0	1.0	1.0	1.0	1.0	1.0	1.0

Table IV-2. (Continued). Inhalation case. AGEDOS grid.

FIFTY-YEAR COMMITTED DOSE EQUIVALENT (NORMALIZED TO ADULT VALUE) FROM RADIONUCLIDE INHALATION

NUCLIDE	INTAKE MODE	AMAD	F1	AGE	LIVER	LUNGS	OVARIES	PANCREAS	ACTIVE MARROW	SKIN	SPLEEN	TESTES	THYMUS	THYROID	UTERUS
TH-230	Y	0.3	1.0E-02	0	3.5	5.7	2.5	2.5	2.3	2.5	4.0	2.5	2.5	2.5	2.5
	Y	0.3	5.0E-03	100	3.2	4.9	2.3	2.3	2.1	2.3	3.6	2.3	2.3	2.3	2.3
	Y	0.3	5.0E-04	365	2.8	3.8	2.0	2.0	1.9	2.0	3.1	2.0	2.0	2.0	2.0
	Y	0.3	5.0E-04	1825	1.9	2.3	1.4	1.4	1.4	1.4	2.0	1.4	1.4	1.4	1.4
	Y	0.3	5.0E-04	3650	1.3	1.6	1.1	1.1	1.1	1.1	1.4	1.1	1.1	1.1	1.1
	Y	0.3	5.0E-04	5475	1.0	1.2	0.99	0.99	1.0	0.99	1.1	0.99	0.99	0.99	0.99
	Y	0.3	2.0E-04	7300	1.0	1.0	1.0	1.0	1.0	1.0	1.0	1.0	1.0	1.0	1.0
	Y	1.0	1.0E-02	0	4.0	5.7	2.9	2.9	2.6	2.9	4.6	2.9	2.9	2.9	2.9
	Y	1.0	5.0E-03	100	3.5	4.9	2.5	2.5	2.3	2.5	4.0	2.5	2.5	2.5	2.5
	Y	1.0	5.0E-04	365	2.9	3.8	2.1	2.1	2.0	2.1	3.3	2.1	2.1	2.1	2.1
	Y	1.0	5.0E-04	1825	1.9	2.3	1.4	1.4	1.4	1.4	2.1	1.4	1.4	1.4	1.4
	Y	1.0	5.0E-04	3650	1.3	1.6	1.1	1.1	1.1	1.1	1.4	1.1	1.1	1.1	1.1
	Y	1.0	5.0E-04	5475	1.1	1.2	0.99	0.99	1.0	0.99	1.1	0.99	0.99	0.99	0.99
	Y	1.0	2.0E-04	7300	1.0	1.0	1.0	1.0	1.0	1.0	1.0	1.0	1.0	1.0	1.0
	Y	5.0	1.0E-02	0	6.3	5.7	4.5	4.5	4.1	4.5	7.4	4.5	4.5	4.5	4.5
	Y	5.0	5.0E-03	100	4.8	4.9	3.4	3.4	3.1	3.4	5.5	3.4	3.4	3.4	3.4
	Y	5.0	5.0E-04	365	3.4	3.8	2.4	2.4	2.2	2.4	3.8	2.4	2.4	2.4	2.4
	Y	5.0	5.0E-04	1825	2.1	2.3	1.6	1.6	1.5	1.6	2.4	1.6	1.6	1.6	1.6
	Y	5.0	5.0E-04	3650	1.4	1.6	1.2	1.2	1.2	1.2	1.5	1.2	1.2	1.2	1.2
	Y	5.0	5.0E-04	5475	1.1	1.2	0.97	0.97	1.0	0.97	1.1	0.97	0.97	0.97	0.97
	Y	5.0	2.0E-04	7300	1.0	1.0	1.0	1.0	1.0	1.0	1.0	1.0	1.0	1.0	1.0
TH-232	W	0.3	1.0E-02	0	4.8	15.	3.2	3.2	3.3	3.2	5.9	3.2	3.2	3.2	3.2
	W	0.3	5.0E-03	100	4.3	12.	2.9	2.9	3.0	2.9	5.3	2.9	2.9	2.9	2.9
	W	0.3	5.0E-04	365	3.7	6.3	2.5	2.5	2.6	2.5	4.4	2.5	2.5	2.5	2.5
	W	0.3	5.0E-04	1825	2.3	3.2	1.8	1.8	1.7	1.8	2.7	1.8	1.8	1.8	1.8
	W	0.3	5.0E-04	3650	1.6	2.1	1.4	1.4	1.2	1.4	1.7	1.4	1.4	1.4	1.4
	W	0.3	5.0E-04	5475	1.1	1.5	1.0	1.0	0.97	1.0	1.1	1.0	1.0	1.0	1.0
	W	0.3	2.0E-04	7300	1.0	1.0	1.0	1.0	1.0	1.0	1.0	1.0	1.0	1.0	1.0
	W	1.0	1.0E-02	0	4.9	14.	3.3	3.2	3.4	3.3	6.1	3.3	3.3	3.3	3.3
	W	1.0	5.0E-03	100	4.4	12.	3.0	2.9	3.0	3.0	5.4	3.0	3.0	3.0	3.0
	W	1.0	5.0E-04	365	3.7	6.0	2.5	2.5	2.6	2.5	4.4	2.5	2.5	2.5	2.5
	W	1.0	5.0E-04	1825	2.4	3.1	1.8	1.8	1.7	1.8	2.7	1.8	1.8	1.8	1.8
	W	1.0	5.0E-04	3650	1.6	2.0	1.4	1.4	1.2	1.4	1.7	1.4	1.4	1.4	1.4
	W	1.0	5.0E-04	5475	1.1	1.4	1.0	1.0	0.97	1.0	1.1	1.0	1.0	1.0	1.0
	W	1.0	2.0E-04	7300	1.0	1.0	1.0	1.0	1.0	1.0	1.0	1.0	1.0	1.0	1.0
	W	5.0	1.0E-02	0	5.1	11.	3.4	3.4	3.5	3.4	6.3	3.4	3.4	3.4	3.4
	W	5.0	5.0E-03	100	4.5	9.2	3.0	3.0	3.1	3.0	5.5	3.0	3.0	3.0	3.0
	W	5.0	5.0E-04	365	3.7	5.1	2.5	2.5	2.6	2.6	4.4	2.6	2.6	2.6	2.6
	W	5.0	5.0E-04	1825	2.4	2.7	1.8	1.8	1.7	1.8	2.7	1.8	1.8	1.8	1.8
	W	5.0	5.0E-04	3650	1.6	1.9	1.4	1.4	1.3	1.4	1.7	1.4	1.4	1.4	1.4
	W	5.0	5.0E-04	5475	1.1	1.3	1.0	1.0	0.98	1.0	1.1	1.0	1.0	1.0	1.0
	W	5.0	2.0E-04	7300	1.0	1.0	1.0	1.0	1.0	1.0	1.0	1.0	1.0	1.0	1.0

Table IV-2. (Continued). Inhalation case. AGEDOS grid.

FIFTY-YEAR COMMITTED DOSE EQUIVALENT (NORMALIZED TO ADULT VALUE) FROM RADIONUCLIDE INHALATION

NUCLIDE	INTAKE MODE	AMAD	F1	AGE	EFFEC-TIVE	ADRENALS	BLADDER WALL	BRAIN	BONE SURFACE	BREAST	STOMACH WALL	SI WALL	ULI WALL	LLI WALL	KIDNEYS
TH-232	Y	0.3	1.0E-02	0	2.5	2.0	2.0	2.0	1.3	2.0	2.0	2.0	2.0	2.1	2.5
	Y	0.3	5.0E-03	100	2.3	1.9	1.9	1.9	1.2	1.9	1.9	1.9	1.9	2.0	2.3
	Y	0.3	5.0E-04	365	2.0	1.7	1.7	1.7	1.2	1.7	1.7	1.7	1.7	1.8	2.1
	Y	0.3	5.0E-04	1825	1.5	1.4	1.4	1.4	1.0	1.4	1.4	1.4	1.4	1.4	1.6
	Y	0.3	5.0E-04	3650	1.2	1.2	1.2	1.2	1.0	1.2	1.2	1.2	1.2	1.2	1.3
	Y	0.3	5.0E-04	5475	1.0	1.0	1.0	1.0	1.0	1.0	1.0	1.0	1.0	1.0	1.1
	Y	0.3	2.0E-04	7300	1.0	1.0	1.0	1.0	1.0	1.0	1.0	1.0	1.0	1.0	1.0
	Y	1.0	1.0E-02	0	2.5	2.2	2.2	2.2	1.4	2.2	2.2	2.2	2.3	2.4	2.8
	Y	1.0	5.0E-03	100	2.3	2.0	2.0	2.0	1.3	2.0	2.0	2.0	2.1	2.2	2.5
	Y	1.0	5.0E-04	365	2.0	1.8	1.8	1.8	1.2	1.8	1.8	1.8	1.8	1.8	2.2
	Y	1.0	5.0E-04	1825	1.5	1.4	1.4	1.4	1.0	1.4	1.4	1.4	1.4	1.4	1.6
	Y	1.0	5.0E-04	3650	1.2	1.2	1.2	1.2	1.0	1.2	1.2	1.2	1.2	1.2	1.3
	Y	1.0	5.0E-04	5475	1.0	1.0	1.0	1.0	0.99	1.0	1.0	1.0	1.0	1.0	1.1
	Y	1.0	2.0E-04	7300	1.0	1.0	1.0	1.0	1.0	1.0	1.0	1.0	1.0	1.0	1.0
	Y	5.0	1.0E-02	0	2.7	3.2	3.2	3.2	1.9	3.2	3.2	3.2	3.4	3.9	4.1
	Y	5.0	5.0E-03	100	2.4	2.6	2.6	2.5	1.5	2.6	2.6	2.6	2.8	3.2	3.3
	Y	5.0	5.0E-04	365	2.0	2.0	2.0	2.0	1.2	2.0	2.0	2.0	2.1	2.2	2.5
	Y	5.0	5.0E-04	1825	1.4	1.5	1.5	1.5	1.1	1.5	1.5	1.5	1.5	1.6	1.8
	Y	5.0	5.0E-04	3650	1.2	1.3	1.3	1.3	1.0	1.3	1.3	1.3	1.3	1.3	1.4
	Y	5.0	5.0E-04	5475	1.0	1.0	1.0	1.0	0.99	1.0	1.0	1.0	1.1	1.1	1.1
	Y	5.0	2.0E-04	7300	1.0	1.0	1.0	1.0	1.0	1.0	1.0	1.0	1.0	1.0	1.0
U-234	D	0.3	1.6E-01	0	35.	17.	17.	17.	58.	17.	17.	17.	17.	17.	17.
	D	0.3	1.5E-01	100	26.	14.	14.	14.	42.	14.	14.	14.	14.	14.	13.
	D	0.3	1.0E-01	365	8.2	7.4	7.4	7.4	11.	7.4	7.4	7.4	7.4	7.4	5.6
	D	0.3	7.0E-02	1825	2.9	3.4	3.4	3.4	3.1	3.4	3.4	3.4	3.4	3.4	2.8
	D	0.3	8.0E-02	3650	2.1	2.1	2.1	2.1	2.4	2.1	2.1	2.1	2.1	2.1	1.9
	D	0.3	9.0E-02	5475	1.8	1.3	1.3	1.3	2.4	1.3	1.3	1.3	1.3	1.3	1.4
	D	0.3	5.0E-02	7300	1.0	1.0	1.0	1.0	1.0	1.0	1.0	1.0	1.0	1.0	1.0
	D	1.0	1.6E-01	0	36.	17.	17.	17.	60.	17.	17.	17.	17.	17.	17.
	D	1.0	1.5E-01	100	26.	14.	14.	14.	43.	14.	14.	14.	14.	14.	14.
	D	1.0	1.0E-01	365	8.3	7.4	7.4	7.4	12.	7.4	7.4	7.4	7.4	7.4	5.6
	D	1.0	7.0E-02	1825	2.9	3.5	3.5	3.5	3.1	3.5	3.5	3.5	3.5	3.5	2.8
	D	1.0	8.0E-02	3650	2.1	2.1	2.1	2.1	2.4	2.1	2.1	2.1	2.1	2.1	1.9
	D	1.0	9.0E-02	5475	1.8	1.3	1.3	1.3	2.4	1.3	1.3	1.3	1.3	1.3	1.4
	D	1.0	5.0E-02	7300	1.0	1.0	1.0	1.0	1.0	1.0	1.0	1.0	1.0	1.0	1.0
	D	5.0	1.6E-01	0	38.	18.	18.	18.	62.	18.	18.	18.	18.	18.	18.
	D	5.0	1.5E-01	100	28.	14.	14.	14.	44.	14.	14.	14.	14.	14.	14.
	D	5.0	1.0E-01	365	8.5	7.6	7.6	7.6	12.	7.6	7.6	7.6	7.6	7.5	5.7
	D	5.0	7.0E-02	1825	2.9	3.5	3.5	3.5	3.1	3.5	3.5	3.5	3.5	3.5	2.8
	D	5.0	8.0E-02	3650	2.1	2.1	2.1	2.1	2.4	2.1	2.1	2.1	2.1	2.1	1.9
	D	5.0	9.0E-02	5475	1.8	1.3	1.3	1.3	2.4	1.3	1.3	1.3	1.3	1.3	1.4
	D	5.0	5.0E-02	7300	1.0	1.0	1.0	1.0	1.0	1.0	1.0	1.0	1.0	1.0	1.0

Table IV-2. (Continued). Inhalation case. AGEDOS grid.

FIFTY-YEAR COMMITTED DOSE EQUIVALENT (NORMALIZED TO ADULT VALUE) FROM RADIONUCLIDE INHALATION

NUCLIDE	INTAKE MODE	AMAD	F1	AGE	LIVER	LUNGS	OVARIES	PANCREAS	ACTIVE MARROW	SKIN	SPLEEN	TESTES	THYMUS	THYROID	UTERUS
TH-232	Y	0.3	1.0E-02	0	2.8	2.9	2.0	2.0	2.3	2.0	3.4	2.0	2.0	2.0	2.0
	Y	0.3	5.0E-03	100	2.6	2.7	1.9	1.9	2.2	1.9	3.1	1.9	1.9	1.9	1.9
	Y	0.3	5.0E-04	365	2.3	2.3	1.7	1.7	2.0	1.7	2.8	1.7	1.7	1.7	1.7
	Y	0.3	5.0E-04	1825	1.7	1.6	1.4	1.4	1.4	1.4	1.9	1.4	1.4	1.4	1.4
	Y	0.3	5.0E-04	3650	1.3	1.3	1.2	1.2	1.2	1.2	1.4	1.2	1.2	1.2	1.2
	Y	0.3	5.0E-04	5475	1.1	1.1	1.0	1.0	1.0	1.0	1.1	1.0	1.0	1.0	1.0
	Y	0.3	2.0E-04	7300	1.0	1.0	1.0	1.0	1.0	1.0	1.0	1.0	1.0	1.0	1.0
	Y	1.0	1.0E-02	0	3.1	2.9	2.2	2.2	2.6	2.2	3.8	2.2	2.2	2.2	2.2
	Y	1.0	5.0E-03	100	2.8	2.7	2.0	2.0	2.3	2.0	3.4	2.0	2.0	2.0	2.0
	Y	1.0	5.0E-04	365	2.4	2.3	1.8	1.8	2.0	1.8	2.8	1.8	1.8	1.8	1.8
	Y	1.0	5.0E-04	1825	1.7	1.6	1.4	1.4	1.5	1.4	1.9	1.4	1.4	1.4	1.4
	Y	1.0	5.0E-04	3650	1.3	1.3	1.2	1.2	1.2	1.2	1.4	1.2	1.2	1.2	1.2
	Y	1.0	5.0E-04	5475	1.1	1.1	1.0	1.0	1.0	1.0	1.1	1.0	1.0	1.0	1.0
	Y	1.0	2.0E-04	7300	1.0	1.0	1.0	1.0	1.0	1.0	1.0	1.0	1.0	1.0	1.0
	Y	5.0	1.0E-02	0	4.7	2.9	3.2	3.2	3.7	3.2	5.9	3.2	3.2	3.2	3.2
	Y	5.0	5.0E-03	100	3.7	2.7	2.6	2.6	2.9	2.6	4.6	2.6	2.5	2.6	2.6
	Y	5.0	5.0E-04	365	2.8	2.3	2.0	2.0	2.2	2.0	3.3	2.0	2.0	2.0	2.0
	Y	5.0	5.0E-04	1825	1.9	1.6	1.5	1.5	1.5	1.5	2.1	1.5	1.5	1.5	1.5
	Y	5.0	5.0E-04	3650	1.4	1.3	1.3	1.3	1.2	1.3	1.5	1.3	1.3	1.3	1.3
	Y	5.0	5.0E-04	5475	1.1	1.1	1.0	1.0	1.0	1.0	1.1	1.0	1.0	1.0	1.0
	Y	5.0	2.0E-04	7300	1.0	1.0	1.0	1.0	1.0	1.0	1.0	1.0	1.0	1.0	1.0
U-234	D	0.3	1.6E-01	0	16.	19.	17.	17.	23.	17.	23.	17.	17.	17.	17.
	D	0.3	1.5E-01	100	13.	16.	14.	14.	18.	14.	16.	14.	14.	14.	14.
	D	0.3	1.0E-01	365	6.8	7.1	7.4	7.4	5.0	7.4	7.4	7.4	7.4	7.4	7.4
	D	0.3	7.0E-02	1825	3.1	3.4	3.4	3.4	1.8	3.4	3.6	3.4	3.4	3.4	3.4
	D	0.3	8.0E-02	3650	2.1	2.2	2.1	2.1	1.3	2.1	2.4	2.1	2.1	2.1	2.1
	D	0.3	9.0E-02	5475	1.4	1.5	1.3	1.3	1.1	1.3	1.7	1.3	1.3	1.3	1.3
	D	0.3	5.0E-02	7300	1.0	1.0	1.0	1.0	1.0	1.0	1.0	1.0	1.0	1.0	1.0
	D	1.0	1.6E-01	0	17.	19.	17.	17.	24.	17.	23.	17.	17.	17.	17.
	D	1.0	1.5E-01	100	13.	15.	14.	14.	18.	14.	16.	14.	14.	14.	14.
	D	1.0	1.0E-01	365	6.9	7.1	7.4	7.4	5.1	7.4	7.5	7.4	7.4	7.4	7.4
	D	1.0	7.0E-02	1825	3.2	3.5	3.5	3.5	1.8	3.5	3.6	3.5	3.5	3.5	3.5
	D	1.0	8.0E-02	3650	2.1	2.2	2.1	2.1	1.3	2.1	2.4	2.1	2.1	2.1	2.1
	D	1.0	9.0E-02	5475	1.4	1.5	1.3	1.3	1.2	1.3	1.8	1.3	1.3	1.3	1.3
	D	1.0	5.0E-02	7300	1.0	1.0	1.0	1.0	1.0	1.0	1.0	1.0	1.0	1.0	1.0
	D	5.0	1.6E-01	0	17.	19.	18.	18.	24.	18.	24.	18.	18.	18.	18.
	D	5.0	1.5E-01	100	14.	15.	14.	14.	19.	14.	17.	14.	14.	14.	14.
	D	5.0	1.0E-01	365	7.0	7.3	7.6	7.6	5.2	7.6	7.6	7.6	7.6	7.6	7.6
	D	5.0	7.0E-02	1825	3.2	3.5	3.5	3.5	1.8	3.5	3.6	3.5	3.5	3.5	3.5
	D	5.0	8.0E-02	3650	2.1	2.2	2.1	2.1	1.4	2.1	2.5	2.1	2.1	2.1	2.1
	D	5.0	9.0E-02	5475	1.4	1.4	1.3	1.3	1.2	1.3	1.8	1.3	1.3	1.3	1.3
	D	5.0	5.0E-02	7300	1.0	1.0	1.0	1.0	1.0	1.0	1.0	1.0	1.0	1.0	1.0

Table IV-2. (Continued). Inhalation case. AGEDOS grid.

FIFTY-YEAR COMMITTED DOSE EQUIVALENT (NORMALIZED TO ADULT VALUE) FROM RADIONUCLIDE INHALATION

NUCLIDE	INTAKE MODE	AMAD	F1	AGE	EFFEC-TIVE	ADRENALS	BLADDER WALL	BRAIN	BONE SURFACE	BREAST	STOMACH WALL	SI WALL	ULI WALL	LLI WALL	KIDNEYS
U-234	W	0.3	1.6E-01	0	18.	20.	20.	20.	65.	20.	20.	20.	19.	19.	19.
	W	0.3	1.5E-01	100	14.	15.	15.	15.	44.	15.	15.	15.	15.	15.	15.
	W	0.3	1.0E-01	365	6.9	8.2	8.2	8.2	13.	8.2	8.2	8.1	8.1	7.8	6.2
	W	0.3	7.0E-02	1825	3.4	3.6	3.6	3.6	3.2	3.6	3.6	3.6	3.6	3.6	2.9
	W	0.3	8.0E-02	3650	2.2	2.2	2.2	2.2	2.6	2.2	2.2	2.2	2.2	2.2	2.0
	W	0.3	9.0E-02	5475	1.5	1.4	1.4	1.4	2.6	1.4	1.4	1.4	1.4	1.4	1.5
	W	0.3	5.0E-02	7300	1.0	1.0	1.0	1.0	1.0	1.0	1.0	1.0	1.0	1.0	1.0
	W	1.0	1.6E-01	0	20.	22.	22.	22.	73.	22.	22.	22.	21.	20.	21.
	W	1.0	1.5E-01	100	15.	17.	17.	17.	50.	17.	17.	17.	16.	16.	16.
	W	1.0	1.0E-01	365	7.1	8.5	8.5	8.5	13.	8.5	8.4	8.4	8.3	7.9	6.4
	W	1.0	7.0E-02	1825	3.4	3.6	3.6	3.6	3.3	3.6	3.6	3.6	3.7	3.6	2.9
	W	1.0	8.0E-02	3650	2.2	2.3	2.3	2.3	2.6	2.3	2.3	2.3	2.3	2.2	2.1
	W	1.0	9.0E-02	5475	1.6	1.5	1.5	1.5	2.7	1.5	1.5	1.5	1.4	1.4	1.6
	W	1.0	5.0E-02	7300	1.0	1.0	1.0	1.0	1.0	1.0	1.0	1.0	1.0	1.0	1.0
	W	5.0	1.6E-01	0	26.	25.	25.	25.	85.	25.	25.	24.	23.	21.	24.
	W	5.0	1.5E-01	100	20.	19.	19.	19.	59.	19.	19.	19.	18.	17.	19.
	W	5.0	1.0E-01	365	7.7	9.0	9.0	9.0	14.	9.0	8.9	8.9	8.6	8.1	6.8
	W	5.0	7.0E-02	1825	3.3	3.7	3.7	3.7	3.3	3.7	3.7	3.7	3.7	3.7	3.0
	W	5.0	8.0E-02	3650	2.2	2.4	2.4	2.4	2.7	2.4	2.4	2.4	2.3	2.3	2.2
	W	5.0	9.0E-02	5475	1.7	1.5	1.5	1.5	2.8	1.5	1.5	1.5	1.5	1.4	1.6
	W	5.0	5.0E-02	7300	1.0	1.0	1.0	1.0	1.0	1.0	1.0	1.0	1.0	1.0	1.0
	Y	0.3	6.4E-03	0	5.7	5.7	5.7	5.7	11.	5.7	6.0	6.3	8.6	11.	5.0
	Y	0.3	6.0E-03	100	4.9	5.1	5.1	5.1	8.6	5.1	5.3	5.6	7.4	9.3	4.3
	Y	0.3	4.0E-03	365	3.8	4.1	4.1	4.1	5.1	4.1	4.1	4.3	4.9	5.5	3.3
	Y	0.3	2.8E-03	1825	2.3	2.4	2.4	2.4	2.6	2.4	2.4	2.4	2.7	3.0	2.1
	Y	0.3	3.2E-03	3650	1.6	1.5	1.5	1.5	2.1	1.5	1.5	1.5	1.7	1.8	1.5
	Y	0.3	3.6E-03	5475	1.2	1.1	1.1	1.1	1.5	1.1	1.1	1.1	1.1	1.2	1.1
	Y	0.3	2.0E-03	7300	1.0	1.0	1.0	1.0	1.0	1.0	1.0	1.0	1.0	1.0	1.0
	Y	1.0	6.4E-03	0	5.7	6.9	6.9	6.9	16.	6.8	7.5	8.0	11.	14.	6.1
	Y	1.0	6.0E-03	100	5.0	5.9	5.9	5.9	12.	5.9	6.4	6.8	9.6	12.	5.2
	Y	1.0	4.0E-03	365	3.8	4.4	4.4	4.4	5.7	4.4	4.5	4.7	5.6	6.2	3.5
	Y	1.0	2.8E-03	1825	2.3	2.4	2.4	2.4	2.6	2.4	2.5	2.6	3.0	3.2	2.1
	Y	1.0	3.2E-03	3650	1.6	1.6	1.6	1.6	2.1	1.6	1.6	1.6	1.8	1.9	1.5
	Y	1.0	3.6E-03	5475	1.2	1.1	1.1	1.1	1.6	1.1	1.1	1.1	1.2	1.2	1.2
	Y	1.0	2.0E-03	7300	1.0	1.0	1.0	1.0	1.0	1.0	1.0	1.0	1.0	1.0	1.0
	Y	5.0	6.4E-03	0	5.8	12.	12.	12.	36.	12.	13.	14.	17.	18.	11.
	Y	5.0	6.0E-03	100	5.0	9.7	9.7	9.7	25.	9.7	11.	11.	14.	15.	9.1
	Y	5.0	4.0E-03	365	3.9	5.7	5.7	5.7	8.1	5.7	5.8	6.1	7.0	7.1	4.4
	Y	5.0	2.8E-03	1825	2.3	2.8	2.8	2.8	2.8	2.8	2.9	3.1	3.5	3.5	2.4
	Y	5.0	3.2E-03	3650	1.6	1.8	1.8	1.8	2.3	1.8	1.8	1.9	2.1	2.1	1.7
	Y	5.0	3.6E-03	5475	1.2	1.2	1.2	1.2	1.9	1.2	1.3	1.2	1.3	1.2	1.3
	Y	5.0	2.0E-03	7300	1.0	1.0	1.0	1.0	1.0	1.0	1.0	1.0	1.0	1.0	1.0

Table IV-2. (Continued). Inhalation case. AGEDOS grid.

FIFTY-YEAR COMMITTED DOSE EQUIVALENT (NORMALIZED TO ADULT VALUE) FROM RADIONUCLIDE INHALATION

NUCLIDE	INTAKE MODE	AMAD	F1	AGE	LIVER	LUNGS	OVARIES	PANCREAS	ACTIVE MARROW	SKIN	SPLEEN	TESTES	THYMUS	THYROID	UTERUS
U-234	W	0.3	1.6E-01	0	19.	17.	20.	20.	26.	20.	25.	20.	20.	20.	20.
	W	0.3	1.5E-01	100	15.	14.	15.	15.	18.	15.	17.	15.	15.	15.	15.
	W	0.3	1.0E-01	365	7.5	6.8	8.2	8.2	5.6	8.2	8.2	8.2	8.2	8.2	8.2
	W	0.3	7.0E-02	1825	3.3	3.4	3.6	3.6	1.8	3.6	3.8	3.6	3.6	3.6	3.6
	W	0.3	8.0E-02	3650	2.3	2.2	2.2	2.2	1.4	2.2	2.6	2.2	2.2	2.2	2.2
	W	0.3	9.0E-02	5475	1.5	1.5	1.4	1.4	1.3	1.4	1.9	1.4	1.4	1.4	1.4
	W	0.3	5.0E-02	7300	1.0	1.0	1.0	1.0	1.0	1.0	1.0	1.0	1.0	1.0	1.0
	W	1.0	1.6E-01	0	21.	17.	22.	22.	29.	22.	28.	22.	22.	22.	22.
	W	1.0	1.5E-01	100	16.	14.	17.	17.	21.	17.	19.	17.	17.	17.	17.
	W	1.0	1.0E-01	365	7.8	6.8	8.5	8.5	5.8	8.5	8.5	8.5	8.5	8.5	8.5
	W	1.0	7.0E-02	1825	3.3	3.4	3.6	3.6	1.9	3.6	3.8	3.6	3.6	3.6	3.6
	W	1.0	8.0E-02	3650	2.3	2.2	2.3	2.3	1.5	2.3	2.7	2.3	2.3	2.3	2.3
	W	1.0	9.0E-02	5475	1.6	1.5	1.5	1.5	1.3	1.5	2.0	1.5	1.5	1.5	1.5
	W	1.0	5.0E-02	7300	1.0	1.0	1.0	1.0	1.0	1.0	1.0	1.0	1.0	1.0	1.0
	W	5.0	1.6E-01	0	24.	17.	25.	25.	33.	25.	33.	25.	25.	25.	25.
	W	5.0	1.5E-01	100	18.	14.	19.	19.	25.	19.	22.	19.	19.	19.	19.
	W	5.0	1.0E-01	365	8.2	6.8	9.0	9.0	6.1	9.0	9.0	9.0	9.0	9.0	9.0
	W	5.0	7.0E-02	1825	3.4	3.4	3.7	3.7	1.9	3.7	3.9	3.7	3.7	3.7	3.7
	W	5.0	8.0E-02	3650	2.4	2.2	2.4	2.4	1.5	2.4	2.7	2.4	2.4	2.4	2.4
	W	5.0	9.0E-02	5475	1.6	1.5	1.5	1.5	1.4	1.5	2.0	1.5	1.5	1.5	1.5
	W	5.0	5.0E-02	7300	1.0	1.0	1.0	1.0	1.0	1.0	1.0	1.0	1.0	1.0	1.0
	Y	0.3	6.4E-03	0	5.4	5.7	5.7	5.7	4.8	5.7	6.3	5.7	5.7	5.7	5.7
	Y	0.3	6.0E-03	100	4.8	4.9	5.1	5.1	3.9	5.1	5.4	5.1	5.1	5.1	5.1
	Y	0.3	4.0E-03	365	3.9	3.8	4.1	4.1	2.5	4.1	4.3	4.1	4.1	4.1	4.1
	Y	0.3	2.8E-03	1825	2.3	2.3	2.4	2.4	1.5	2.4	2.6	2.4	2.4	2.4	2.4
	Y	0.3	3.2E-03	3650	1.6	1.6	1.5	1.5	1.2	1.5	1.8	1.5	1.5	1.5	1.5
	Y	0.3	3.6E-03	5475	1.1	1.2	1.1	1.1	1.1	1.1	1.3	1.1	1.1	1.1	1.1
	Y	0.3	2.0E-03	7300	1.0	1.0	1.0	1.0	1.0	1.0	1.0	1.0	1.0	1.0	1.0
	Y	1.0	6.4E-03	0	6.5	5.7	6.9	6.9	6.6	6.9	7.9	6.9	6.9	6.9	6.9
	Y	1.0	6.0E-03	100	5.6	4.9	5.9	5.9	5.2	5.9	6.4	5.9	5.9	5.9	5.9
	Y	1.0	4.0E-03	365	4.1	3.8	4.4	4.4	2.8	4.4	4.6	4.4	4.4	4.4	4.4
	Y	1.0	2.8E-03	1825	2.4	2.3	2.4	2.4	1.5	2.4	2.7	2.4	2.4	2.4	2.4
	Y	1.0	3.2E-03	3650	1.6	1.6	1.6	1.6	1.2	1.6	1.9	1.6	1.6	1.6	1.6
	Y	1.0	3.6E-03	5475	1.2	1.2	1.1	1.1	1.1	1.1	1.3	1.1	1.1	1.1	1.1
	Y	1.0	2.0E-03	7300	1.0	1.0	1.0	1.0	1.0	1.0	1.0	1.0	1.0	1.0	1.0
	Y	5.0	6.4E-03	0	11.	5.7	12.	12.	14.	12.	15.	12.	12.	12.	12.
	Y	5.0	6.0E-03	100	9.2	4.9	9.7	9.7	11.	9.7	11.	9.7	9.7	9.7	9.7
	Y	5.0	4.0E-03	365	5.3	3.8	5.7	5.7	3.7	5.7	5.8	5.7	5.7	5.7	5.7
	Y	5.0	2.8E-03	1825	2.7	2.3	2.8	2.8	1.6	2.8	3.1	2.8	2.8	2.8	2.8
	Y	5.0	3.2E-03	3650	1.8	1.6	1.8	1.8	1.3	1.8	2.1	1.8	1.8	1.8	1.8
	Y	5.0	3.6E-03	5475	1.3	1.2	1.2	1.2	1.2	1.2	1.5	1.2	1.2	1.2	1.2
	Y	5.0	2.0E-03	7300	1.0	1.0	1.0	1.0	1.0	1.0	1.0	1.0	1.0	1.0	1.0

Table IV-2. (Continued). Inhalation case. AGEDOS grid.

FIFTY-YEAR COMMITTED DOSE EQUIVALENT (NORMALIZED TO ADULT VALUE) FROM RADIONUCLIDE INHALATION

NUCLIDE	INTAKE MODE	AMAD	F1	AGE	EFFEC-TIVE	ADRENALS	BLADDER WALL	BRAIN	BONE SURFACE	BREAST	STOMACH WALL	SI WALL	ULI WALL	LLI WALL	KIDNEYS
U-235	D	0.3	1.6E-01	0	35.	17.	17.	17.	58.	17.	17.	17.	17.	17.	17.
	D	0.3	1.5E-01	100	26.	13.	13.	13.	42.	13.	13.	13.	13.	13.	13.
	D	0.3	1.0E-01	365	8.2	7.3	7.3	7.3	11.	7.3	7.3	7.3	7.3	7.3	5.6
	D	0.3	7.0E-02	1825	2.9	3.4	3.4	3.4	3.1	3.4	3.4	3.4	3.4	3.4	2.8
	D	0.3	8.0E-02	3650	2.1	2.1	2.1	2.1	2.4	2.1	2.1	2.1	2.1	2.1	1.9
	D	0.3	9.0E-02	5475	1.8	1.3	1.3	1.3	2.4	1.3	1.3	1.3	1.3	1.3	1.4
	D	0.3	5.0E-02	7300	1.0	1.0	1.0	1.0	1.0	1.0	1.0	1.0	1.0	1.0	1.0
	D	1.0	1.6E-01	0	36.	17.	17.	17.	60.	17.	17.	17.	17.	17.	17.
	D	1.0	1.5E-01	100	26.	14.	14.	14.	43.	14.	14.	14.	14.	14.	14.
	D	1.0	1.0E-01	365	8.3	7.4	7.4	7.4	12.	7.4	7.4	7.4	7.4	7.4	5.6
	D	1.0	7.0E-02	1825	2.9	3.4	3.4	3.4	3.1	3.4	3.4	3.4	3.4	3.4	2.8
	D	1.0	8.0E-02	3650	2.1	2.1	2.1	2.1	2.4	2.1	2.1	2.1	2.1	2.1	1.9
	D	1.0	9.0E-02	5475	1.8	1.3	1.3	1.3	2.4	1.3	1.3	1.3	1.3	1.3	1.4
	D	1.0	5.0E-02	7300	1.0	1.0	1.0	1.0	1.0	1.0	1.0	1.0	1.0	1.0	1.0
	D	5.0	1.6E-01	0	38.	18.	18.	18.	62.	18.	18.	18.	18.	18.	18.
	D	5.0	1.5E-01	100	28.	14.	14.	14.	45.	14.	14.	14.	14.	14.	14.
	D	5.0	1.0E-01	365	8.5	7.5	7.5	7.5	12.	7.5	7.5	7.5	7.5	7.5	5.7
	D	5.0	7.0E-02	1825	2.9	3.5	3.5	3.5	3.1	3.5	3.5	3.5	3.5	3.5	2.8
	D	5.0	8.0E-02	3650	2.1	2.1	2.1	2.1	2.4	2.1	2.1	2.1	2.1	2.1	1.9
	D	5.0	9.0E-02	5475	1.8	1.3	1.3	1.3	2.4	1.3	1.3	1.3	1.3	1.3	1.4
	D	5.0	5.0E-02	7300	1.0	1.0	1.0	1.0	1.0	1.0	1.0	1.0	1.0	1.0	1.0
	W	0.3	1.6E-01	0	18.	20.	20.	20.	65.	20.	20.	20.	19.	18.	19.
	W	0.3	1.5E-01	100	14.	15.	15.	15.	44.	15.	15.	15.	15.	15.	15.
	W	0.3	1.0E-01	365	6.9	8.1	8.1	8.1	13.	8.1	8.1	8.1	8.0	7.7	6.2
	W	0.3	7.0E-02	1825	3.4	3.6	3.6	3.6	3.2	3.6	3.6	3.6	3.6	3.6	2.9
	W	0.3	8.0E-02	3650	2.2	2.2	2.2	2.2	2.6	2.2	2.2	2.2	2.2	2.2	2.0
	W	0.3	9.0E-02	5475	1.5	1.4	1.4	1.5	2.6	1.5	1.4	1.4	1.4	1.3	1.5
	W	0.3	5.0E-02	7300	1.0	1.0	1.0	1.0	1.0	1.0	1.0	1.0	1.0	1.0	1.0
	W	1.0	1.6E-01	0	20.	22.	22.	22.	73.	22.	22.	21.	21.	20.	21.
	W	1.0	1.5E-01	100	15.	17.	17.	17.	50.	17.	17.	17.	16.	16.	16.
	W	1.0	1.0E-01	365	7.1	8.4	8.4	8.4	13.	8.4	8.4	8.4	8.2	7.8	6.4
	W	1.0	7.0E-02	1825	3.4	3.6	3.6	3.6	3.3	3.6	3.6	3.6	3.7	3.6	2.9
	W	1.0	8.0E-02	3650	2.2	2.3	2.3	2.3	2.6	2.3	2.3	2.3	2.3	2.2	2.1
	W	1.0	9.0E-02	5475	1.6	1.5	1.5	1.5	2.7	1.5	1.5	1.5	1.4	1.4	1.6
	W	1.0	5.0E-02	7300	1.0	1.0	1.0	1.0	1.0	1.0	1.0	1.0	1.0	1.0	1.0
	W	5.0	1.6E-01	0	26.	25.	25.	25.	85.	25.	25.	24.	23.	21.	24.
	W	5.0	1.5E-01	100	20.	19.	19.	19.	59.	19.	19.	19.	18.	17.	19.
	W	5.0	1.0E-01	365	7.6	8.9	8.9	8.9	14.	8.9	8.8	8.8	8.5	8.0	6.8
	W	5.0	7.0E-02	1825	3.3	3.7	3.7	3.7	3.3	3.7	3.7	3.7	3.7	3.7	3.0
	W	5.0	8.0E-02	3650	2.2	2.4	2.4	2.4	2.7	2.4	2.3	2.3	2.3	2.2	2.2
	W	5.0	9.0E-02	5475	1.7	1.5	1.5	1.5	2.8	1.5	1.5	1.5	1.5	1.4	1.6
	W	5.0	5.0E-02	7300	1.0	1.0	1.0	1.0	1.0	1.0	1.0	1.0	1.0	1.0	1.0

Table IV-2. (Continued). Inhalation case. AGEDOS grid.

FIFTY-YEAR COMMITTED DOSE EQUIVALENT (NORMALIZED TO ADULT VALUE) FROM RADIONUCLIDE INHALATION

NUCLIDE	INTAKE MODE	AMAD	F1	AGE	LIVER	LUNGS	OVARIES	PANCREAS	ACTIVE MARROW	SKIN	SPLEEN	TESTES	THYMUS	THYROID	UTERUS
U-235	D	0.3	1.6E-01	0	16.	19.	17.	17.	23.	17.	22.	17.	17.	17.	17.
	D	0.3	1.5E-01	100	13.	16.	13.	13.	17.	13.	16.	13.	13.	13.	13.
	D	0.3	1.0E-01	365	6.7	7.1	7.3	7.3	5.0	7.3	7.4	7.3	7.3	7.3	7.3
	D	0.3	7.0E-02	1825	3.1	3.5	3.4	3.4	1.7	3.4	3.6	3.4	3.4	3.4	3.4
	D	0.3	8.0E-02	3650	2.1	2.2	2.1	2.1	1.3	2.1	2.4	2.1	2.1	2.1	2.1
	D	0.3	9.0E-02	5475	1.4	1.5	1.3	1.3	1.1	1.3	1.7	1.3	1.3	1.3	1.3
	D	0.3	5.0E-02	7300	1.0	1.0	1.0	1.0	1.0	1.0	1.0	1.0	1.0	1.0	1.0
	D	1.0	1.6E-01	0	16.	19.	17.	17.	23.	17.	23.	17.	17.	17.	17.
	D	1.0	1.5E-01	100	13.	15.	14.	14.	18.	14.	16.	14.	14.	14.	14.
	D	1.0	1.0E-01	365	6.8	7.1	7.4	7.4	5.1	7.4	7.5	7.4	7.4	7.4	7.4
	D	1.0	7.0E-02	1825	3.1	3.5	3.4	3.4	1.8	3.4	3.6	3.4	3.4	3.4	3.4
	D	1.0	8.0E-02	3650	2.1	2.2	2.1	2.1	1.3	2.1	2.4	2.1	2.1	2.1	2.1
	D	1.0	9.0E-02	5475	1.4	1.5	1.3	1.3	1.2	1.3	1.8	1.3	1.3	1.3	1.3
	D	1.0	5.0E-02	7300	1.0	1.0	1.0	1.0	1.0	1.0	1.0	1.0	1.0	1.0	1.0
	D	5.0	1.6E-01	0	17.	19.	18.	18.	24.	18.	24.	18.	18.	18.	18.
	D	5.0	1.5E-01	100	14.	15.	14.	14.	18.	14.	16.	14.	14.	14.	14.
	D	5.0	1.0E-01	365	6.9	7.3	7.5	7.5	5.2	7.5	7.6	7.5	7.5	7.5	7.5
	D	5.0	7.0E-02	1825	3.2	3.5	3.5	3.5	1.8	3.5	3.6	3.5	3.5	3.5	3.5
	D	5.0	8.0E-02	3650	2.1	2.2	2.1	2.1	1.4	2.1	2.5	2.1	2.1	2.1	2.1
	D	5.0	9.0E-02	5475	1.4	1.4	1.3	1.3	1.2	1.3	1.8	1.3	1.3	1.3	1.3
	D	5.0	5.0E-02	7300	1.0	1.0	1.0	1.0	1.0	1.0	1.0	1.0	1.0	1.0	1.0
	W	0.3	1.6E-01	0	18.	17.	20.	20.	26.	20.	25.	20.	19.	20.	20.
	W	0.3	1.5E-01	100	14.	14.	15.	15.	18.	15.	17.	15.	15.	15.	15.
	W	0.3	1.0E-01	365	7.4	6.8	8.1	8.1	5.5	8.1	8.2	8.1	8.0	8.1	8.1
	W	0.3	7.0E-02	1825	3.3	3.4	3.6	3.6	1.8	3.6	3.8	3.6	3.5	3.6	3.6
	W	0.3	8.0E-02	3650	2.2	2.2	2.2	2.2	1.4	2.2	2.6	2.2	2.2	2.2	2.2
	W	0.3	9.0E-02	5475	1.5	1.5	1.4	1.4	1.3	1.4	1.9	1.4	1.4	1.4	1.4
	W	0.3	5.0E-02	7300	1.0	1.0	1.0	1.0	1.0	1.0	1.0	1.0	1.0	1.0	1.0
	W	1.0	1.6E-01	0	20.	17.	22.	22.	29.	22.	28.	22.	21.	22.	22.
	W	1.0	1.5E-01	100	16.	14.	17.	17.	21.	17.	19.	17.	17.	17.	17.
	W	1.0	1.0E-01	365	7.7	6.8	8.4	8.4	5.7	8.4	8.5	8.4	8.4	8.4	8.4
	W	1.0	7.0E-02	1825	3.3	3.4	3.6	3.6	1.9	3.6	3.8	3.6	3.6	3.6	3.6
	W	1.0	8.0E-02	3650	2.3	2.2	2.3	2.3	1.5	2.3	2.6	2.3	2.3	2.3	2.3
	W	1.0	9.0E-02	5475	1.6	1.5	1.5	1.5	1.3	1.5	2.0	1.5	1.5	1.5	1.5
	W	1.0	5.0E-02	7300	1.0	1.0	1.0	1.0	1.0	1.0	1.0	1.0	1.0	1.0	1.0
	W	5.0	1.6E-01	0	23.	17.	25.	25.	33.	25.	33.	25.	25.	25.	25.
	W	5.0	1.5E-01	100	18.	14.	19.	19.	24.	19.	22.	19.	19.	19.	19.
	W	5.0	1.0E-01	365	8.2	6.8	8.9	8.9	6.1	8.9	9.0	8.9	8.9	8.9	8.9
	W	5.0	7.0E-02	1825	3.4	3.4	3.7	3.7	1.9	3.7	3.9	3.7	3.7	3.7	3.7
	W	5.0	8.0E-02	3650	2.4	2.2	2.4	2.4	1.5	2.4	2.7	2.4	2.4	2.4	2.4
	W	5.0	9.0E-02	5475	1.6	1.5	1.5	1.5	1.3	1.5	2.0	1.5	1.5	1.5	1.5
	W	5.0	5.0E-02	7300	1.0	1.0	1.0	1.0	1.0	1.0	1.0	1.0	1.0	1.0	1.0

Table IV-2. (Continued). Inhalation case. AGEDOS grid.

FIFTY-YEAR COMMITTED DOSE EQUIVALENT (NORMALIZED TO ADULT VALUE) FROM RADIONUCLIDE INHALATION

NUCLIDE	INTAKE MODE	AMAD	F1	AGE	EFFEC-TIVE	ADRENALS	BLADDER WALL	BRAIN	BONE SURFACE	BREAST	STOMACH WALL	SI WALL	ULI WALL	LLI WALL	KIDNEYS
U-235	Y	0.3	6.4E-03	0	5.7	5.6	5.7	5.7	11.	6.0	5.5	6.5	8.8	11.	5.0
	Y	0.3	6.0E-03	100	4.9	5.0	5.1	5.1	8.5	5.4	4.9	5.7	7.6	9.6	4.3
	Y	0.3	4.0E-03	365	3.9	4.0	4.1	4.1	5.1	4.4	3.8	4.3	5.0	5.6	3.3
	Y	0.3	2.8E-03	1825	2.3	2.4	2.4	2.3	2.5	2.7	2.3	2.5	2.8	3.0	2.1
	Y	0.3	3.2E-03	3650	1.6	1.6	1.5	1.5	2.1	1.7	1.5	1.6	1.7	1.8	1.5
	Y	0.3	3.6E-03	5475	1.2	1.1	1.1	1.1	1.5	1.2	1.1	1.1	1.2	1.2	1.1
	Y	0.3	2.0E-03	7300	1.0	1.0	1.0	1.0	1.0	1.0	1.0	1.0	1.0	1.0	1.0
	Y	1.0	6.4E-03	0	5.7	6.4	6.9	6.8	16.	6.9	6.7	8.1	12.	14.	6.1
	Y	1.0	6.0E-03	100	5.0	5.6	6.0	5.9	12.	6.0	5.8	6.9	9.8	12.	5.2
	Y	1.0	4.0E-03	365	3.9	4.2	4.4	4.4	5.7	4.6	4.1	4.7	5.7	6.2	3.5
	Y	1.0	2.8E-03	1825	2.3	2.5	2.4	2.4	2.6	2.7	2.3	2.6	3.0	3.2	2.1
	Y	1.0	3.2E-03	3650	1.6	1.6	1.6	1.6	2.1	1.7	1.5	1.6	1.8	2.0	1.5
	Y	1.0	3.6E-03	5475	1.2	1.2	1.1	1.1	1.6	1.2	1.1	1.2	1.2	1.2	1.2
	Y	1.0	2.0E-03	7300	1.0	1.0	1.0	1.0	1.0	1.0	1.0	1.0	1.0	1.0	1.0
	Y	5.0	6.4E-03	0	5.8	11.	12.	12.	36.	11.	12.	14.	17.	18.	11.
	Y	5.0	6.0E-03	100	5.0	8.6	9.6	9.6	25.	9.2	9.7	11.	14.	15.	9.0
	Y	5.0	4.0E-03	365	3.9	5.3	5.7	5.6	8.1	5.7	5.4	6.1	7.0	7.1	4.4
	Y	5.0	2.8E-03	1825	2.3	2.8	2.8	2.8	2.8	3.0	2.7	3.1	3.5	3.5	2.4
	Y	5.0	3.2E-03	3650	1.6	1.8	1.8	1.8	2.3	1.9	1.7	1.9	2.1	2.1	1.7
	Y	5.0	3.6E-03	5475	1.2	1.2	1.2	1.2	1.9	1.3	1.2	1.2	1.3	1.2	1.3
	Y	5.0	2.0E-03	7300	1.0	1.0	1.0	1.0	1.0	1.0	1.0	1.0	1.0	1.0	1.0
U-238	D	0.3	1.6E-01	0	34.	17.	17.	17.	58.	17.	17.	17.	17.	17.	17.
	D	0.3	1.5E-01	100	25.	13.	13.	13.	42.	13.	13.	13.	13.	13.	13.
	D	0.3	1.0E-01	365	8.1	7.3	7.3	7.3	11.	7.3	7.3	7.3	7.3	7.3	5.5
	D	0.3	7.0E-02	1825	2.9	3.4	3.4	3.4	3.1	3.4	3.4	3.4	3.4	3.4	2.8
	D	0.3	8.0E-02	3650	2.1	2.1	2.1	2.1	2.4	2.1	2.1	2.1	2.1	2.1	1.9
	D	0.3	9.0E-02	5475	1.8	1.3	1.3	1.3	2.4	1.3	1.3	1.3	1.3	1.3	1.4
	D	0.3	5.0E-02	7300	1.0	1.0	1.0	1.0	1.0	1.0	1.0	1.0	1.0	1.0	1.0
	D	1.0	1.6E-01	0	35.	17.	17.	17.	59.	17.	17.	17.	17.	17.	17.
	D	1.0	1.5E-01	100	26.	14.	14.	14.	43.	14.	14.	14.	14.	14.	14.
	D	1.0	1.0E-01	365	8.3	7.4	7.4	7.4	12.	7.4	7.4	7.4	7.4	7.4	5.6
	D	1.0	7.0E-02	1825	2.9	3.4	3.4	3.4	3.1	3.4	3.4	3.4	3.4	3.4	2.8
	D	1.0	8.0E-02	3650	2.1	2.1	2.1	2.1	2.4	2.1	2.1	2.1	2.1	2.1	1.9
	D	1.0	9.0E-02	5475	1.8	1.3	1.3	1.3	2.4	1.3	1.3	1.3	1.3	1.3	1.4
	D	1.0	5.0E-02	7300	1.0	1.0	1.0	1.0	1.0	1.0	1.0	1.0	1.0	1.0	1.0
	D	5.0	1.6E-01	0	37.	18.	18.	18.	62.	18.	18.	18.	18.	18.	18.
	D	5.0	1.5E-01	100	27.	14.	14.	14.	44.	14.	14.	14.	14.	14.	14.
	D	5.0	1.0E-01	365	8.4	7.5	7.5	7.5	12.	7.5	7.5	7.5	7.5	7.5	5.7
	D	5.0	7.0E-02	1825	2.9	3.5	3.5	3.5	3.1	3.5	3.5	3.5	3.5	3.5	2.8
	D	5.0	8.0E-02	3650	2.1	2.1	2.1	2.1	2.4	2.1	2.1	2.1	2.1	2.1	1.9
	D	5.0	9.0E-02	5475	1.8	1.3	1.3	1.3	2.4	1.3	1.3	1.3	1.3	1.3	1.4
	D	5.0	5.0E-02	7300	1.0	1.0	1.0	1.0	1.0	1.0	1.0	1.0	1.0	1.0	1.0

Table IV-2. (Continued). Inhalation case. AGEDOS grid.

FIFTY-YEAR COMMITTED DOSE EQUIVALENT (NORMALIZED TO ADULT VALUE) FROM RADIONUCLIDE INHALATION

NUCLIDE	INTAKE MODE	AMAD	F1	AGE	LIVER	LUNGS	OVARIES	PANCREAS	ACTIVE MARROW	SKIN	SPLEEN	TESTES	THYMUS	THYROID	UTERUS
U-235	Y	0.3	6.4E-03	0	4.8	5.7	5.8	5.2	4.8	5.4	6.0	5.7	4.5	5.8	5.8
	Y	0.3	6.0E-03	100	4.3	4.9	5.1	4.7	3.9	4.8	5.1	5.1	4.0	5.2	5.1
	Y	0.3	4.0E-03	365	3.5	3.8	4.1	3.8	2.5	4.0	4.1	4.1	3.3	4.2	4.1
	Y	0.3	2.8E-03	1825	2.2	2.3	2.4	2.2	1.5	2.3	2.5	2.4	2.1	2.4	2.4
	Y	0.3	3.2E-03	3650	1.5	1.6	1.5	1.5	1.2	1.5	1.7	1.5	1.4	1.6	1.5
	Y	0.3	3.6E-03	5475	1.2	1.2	1.1	1.1	1.1	1.1	1.2	1.1	1.1	1.1	1.1
	Y	0.3	2.0E-03	7300	1.0	1.0	1.0	1.0	1.0	1.0	1.0	1.0	1.0	1.0	1.0
	Y	1.0	6.4E-03	0	5.4	5.7	6.9	6.1	6.4	6.3	7.3	6.9	5.2	6.8	6.9
	Y	1.0	6.0E-03	100	4.8	4.9	6.0	5.3	5.1	5.5	6.0	5.9	4.6	5.9	6.0
	Y	1.0	4.0E-03	365	3.7	3.8	4.4	4.0	2.7	4.3	4.3	4.4	3.5	4.5	4.4
	Y	1.0	2.8E-03	1825	2.2	2.3	2.4	2.3	1.5	2.4	2.6	2.4	2.1	2.5	2.4
	Y	1.0	3.2E-03	3650	1.6	1.6	1.6	1.5	1.2	1.5	1.8	1.6	1.4	1.6	1.6
	Y	1.0	3.6E-03	5475	1.2	1.2	1.1	1.1	1.1	1.1	1.3	1.1	1.1	1.2	1.1
	Y	1.0	2.0E-03	7300	1.0	1.0	1.0	1.0	1.0	1.0	1.0	1.0	1.0	1.0	1.0
	Y	5.0	6.4E-03	0	8.8	5.7	12.	10.	14.	11.	14.	12.	9.1	11.	12.
	Y	5.0	6.0E-03	100	7.3	4.9	9.6	8.4	11.	8.9	10.	9.7	7.5	9.4	9.6
	Y	5.0	4.0E-03	365	4.5	3.9	5.6	5.1	3.7	5.5	5.5	5.7	4.6	5.6	5.7
	Y	5.0	2.8E-03	1825	2.5	2.3	2.8	2.6	1.6	2.8	2.9	2.8	2.5	2.8	2.8
	Y	5.0	3.2E-03	3650	1.7	1.6	1.8	1.7	1.3	1.8	2.0	1.8	1.6	1.8	1.8
	Y	5.0	3.6E-03	5475	1.3	1.2	1.2	1.2	1.2	1.2	1.5	1.2	1.2	1.2	1.2
	Y	5.0	2.0E-03	7300	1.0	1.0	1.0	1.0	1.0	1.0	1.0	1.0	1.0	1.0	1.0
U-238	D	0.3	1.6E-01	0	16.	19.	17.	17.	22.	17.	22.	17.	17.	17.	17.
	D	0.3	1.5E-01	100	13.	16.	13.	13.	17.	13.	16.	13.	13.	13.	13.
	D	0.3	1.0E-01	365	6.7	7.0	7.3	7.3	4.9	7.3	7.4	7.3	7.3	7.3	7.3
	D	0.3	7.0E-02	1825	3.1	3.4	3.4	3.4	1.7	3.4	3.6	3.4	3.4	3.4	3.4
	D	0.3	8.0E-02	3650	2.1	2.2	2.1	2.1	1.3	2.1	2.4	2.1	2.1	2.1	2.1
	D	0.3	9.0E-02	5475	1.4	1.5	1.3	1.3	1.1	1.3	1.7	1.3	1.3	1.3	1.3
	D	0.3	5.0E-02	7300	1.0	1.0	1.0	1.0	1.0	1.0	1.0	1.0	1.0	1.0	1.0
	D	1.0	1.6E-01	0	16.	19.	17.	17.	23.	17.	23.	17.	17.	17.	17.
	D	1.0	1.5E-01	100	13.	15.	14.	14.	17.	14.	16.	14.	14.	14.	14.
	D	1.0	1.0E-01	365	6.8	7.1	7.4	7.4	5.0	7.4	7.4	7.4	7.4	7.4	7.4
	D	1.0	7.0E-02	1825	3.1	3.4	3.4	3.4	1.7	3.4	3.6	3.4	3.4	3.4	3.4
	D	1.0	8.0E-02	3650	2.1	2.2	2.1	2.1	1.3	2.1	2.4	2.1	2.1	2.1	2.1
	D	1.0	9.0E-02	5475	1.4	1.5	1.3	1.3	1.1	1.3	1.8	1.3	1.3	1.3	1.3
	D	1.0	5.0E-02	7300	1.0	1.0	1.0	1.0	1.0	1.0	1.0	1.0	1.0	1.0	1.0
	D	5.0	1.6E-01	0	17.	19.	18.	18.	24.	18.	24.	18.	18.	18.	18.
	D	5.0	1.5E-01	100	14.	15.	14.	14.	18.	14.	16.	14.	14.	14.	14.
	D	5.0	1.0E-01	365	6.9	7.3	7.5	7.5	5.1	7.5	7.6	7.5	7.5	7.5	7.5
	D	5.0	7.0E-02	1825	3.2	3.4	3.5	3.5	1.7	3.5	3.6	3.5	3.5	3.5	3.5
	D	5.0	8.0E-02	3650	2.1	2.2	2.1	2.1	1.3	2.1	2.4	2.1	2.1	2.1	2.1
	D	5.0	9.0E-02	5475	1.4	1.4	1.3	1.3	1.2	1.3	1.8	1.3	1.3	1.3	1.3
	D	5.0	5.0E-02	7300	1.0	1.0	1.0	1.0	1.0	1.0	1.0	1.0	1.0	1.0	1.0

Table IV-2. (Continued). Inhalation case. AGEDOS grid.

FIFTY-YEAR COMMITTED DOSE EQUIVALENT (NORMALIZED TO ADULT VALUE) FROM RADIONUCLIDE INHALATION

NUCLIDE	INTAKE MODE	AMAD	F1	AGE	EFFEC-TIVE	ADRENALS	BLADDER WALL	BRAIN	BONE SURFACE	BREAST	STOMACH WALL	SI WALL	ULI WALL	LLI WALL	KIDNEYS
U-238	W	0.3	1.6E-01	0	18.	20.	20.	20.	64.	20.	20.	20.	19.	18.	19.
	W	0.3	1.5E-01	100	14.	15.	15.	15.	43.	15.	15.	15.	15.	15.	15.
	W	0.3	1.0E-01	365	6.9	8.1	8.1	8.1	12.	8.1	8.1	8.1	8.0	7.7	6.2
	W	0.3	7.0E-02	1825	3.3	3.6	3.6	3.6	3.2	3.6	3.6	3.6	3.6	3.6	2.9
	W	0.3	8.0E-02	3650	2.2	2.2	2.2	2.2	2.6	2.2	2.2	2.2	2.2	2.2	2.0
	W	0.3	9.0E-02	5475	1.5	1.4	1.4	1.4	2.6	1.4	1.4	1.4	1.4	1.3	1.5
	W	0.3	5.0E-02	7300	1.0	1.0	1.0	1.0	1.0	1.0	1.0	1.0	1.0	1.0	1.0
	W	1.0	1.6E-01	0	20.	22.	22.	22.	72.	22.	22.	21.	21.	20.	21.
	W	1.0	1.5E-01	100	15.	17.	17.	17.	49.	17.	17.	17.	16.	16.	16.
	W	1.0	1.0E-01	365	7.0	8.4	8.4	8.4	13.	8.4	8.4	8.4	8.2	7.8	6.4
	W	1.0	7.0E-02	1825	3.3	3.6	3.6	3.6	3.2	3.6	3.6	3.6	3.7	3.6	2.9
	W	1.0	8.0E-02	3650	2.2	2.3	2.3	2.3	2.6	2.3	2.3	2.3	2.3	2.2	2.1
	W	1.0	9.0E-02	5475	1.6	1.5	1.5	1.5	2.7	1.5	1.5	1.5	1.4	1.4	1.5
	W	1.0	5.0E-02	7300	1.0	1.0	1.0	1.0	1.0	1.0	1.0	1.0	1.0	1.0	1.0
	W	5.0	1.6E-01	0	26.	25.	25.	25.	84.	25.	25.	24.	23.	21.	24.
	W	5.0	1.5E-01	100	20.	19.	19.	19.	58.	19.	19.	19.	18.	17.	19.
	W	5.0	1.0E-01	365	7.6	8.9	8.9	8.9	14.	8.9	8.9	8.8	8.6	8.0	6.7
	W	5.0	7.0E-02	1825	3.3	3.7	3.7	3.7	3.3	3.7	3.7	3.7	3.7	3.7	3.0
	W	5.0	8.0E-02	3650	2.2	2.4	2.4	2.4	2.7	2.4	2.4	2.3	2.3	2.2	2.1
	W	5.0	9.0E-02	5475	1.7	1.5	1.5	1.5	2.8	1.5	1.5	1.5	1.5	1.4	1.6
	W	5.0	5.0E-02	7300	1.0	1.0	1.0	1.0	1.0	1.0	1.0	1.0	1.0	1.0	1.0
	Y	0.3	6.4E-03	0	5.7	5.5	5.7	5.7	11.	5.6	5.8	6.3	8.6	11.	4.9
	Y	0.3	6.0E-03	100	4.9	4.9	5.1	5.0	8.5	5.0	5.1	5.6	7.4	9.1	4.3
	Y	0.3	4.0E-03	365	3.8	4.0	4.1	4.1	5.1	4.0	4.0	4.3	5.0	5.5	3.3
	Y	0.3	2.8E-03	1825	2.3	2.3	2.3	2.3	2.5	2.4	2.3	2.4	2.7	3.0	2.1
	Y	0.3	3.2E-03	3650	1.6	1.5	1.5	1.5	2.1	1.5	1.5	1.5	1.7	1.8	1.5
	Y	0.3	3.6E-03	5475	1.2	1.1	1.1	1.1	1.5	1.1	1.1	1.1	1.1	1.2	1.1
	Y	0.3	2.0E-03	7300	1.0	1.0	1.0	1.0	1.0	1.0	1.0	1.0	1.0	1.0	1.0
	Y	1.0	6.4E-03	0	5.7	6.6	6.8	6.8	15.	6.7	7.2	7.9	11.	13.	6.1
	Y	1.0	6.0E-03	100	4.9	5.7	5.9	5.9	12.	5.8	6.2	6.8	9.4	11.	5.2
	Y	1.0	4.0E-03	365	3.8	4.3	4.4	4.3	5.6	4.3	4.3	4.7	5.6	6.1	3.5
	Y	1.0	2.8E-03	1825	2.3	2.4	2.4	2.4	2.6	2.4	2.4	2.6	3.0	3.2	2.1
	Y	1.0	3.2E-03	3650	1.6	1.5	1.6	1.6	2.1	1.6	1.5	1.6	1.8	1.9	1.5
	Y	1.0	3.6E-03	5475	1.2	1.1	1.1	1.1	1.6	1.1	1.1	1.1	1.2	1.2	1.2
	Y	1.0	2.0E-03	7300	1.0	1.0	1.0	1.0	1.0	1.0	1.0	1.0	1.0	1.0	1.0
	Y	5.0	6.4E-03	0	5.7	11.	12.	12.	35.	12.	13.	14.	17.	18.	11.
	Y	5.0	6.0E-03	100	5.0	9.3	9.6	9.6	25.	9.4	10.	11.	14.	15.	9.0
	Y	5.0	4.0E-03	365	3.8	5.5	5.6	5.6	8.0	5.6	5.6	6.1	7.0	7.0	4.4
	Y	5.0	2.8E-03	1825	2.3	2.8	2.8	2.8	2.8	2.8	2.8	3.0	3.5	3.5	2.4
	Y	5.0	3.2E-03	3650	1.6	1.8	1.8	1.8	2.3	1.8	1.8	1.9	2.1	2.1	1.7
	Y	5.0	3.6E-03	5475	1.2	1.2	1.2	1.2	1.9	1.2	1.2	1.2	1.3	1.2	1.3
	Y	5.0	2.0E-03	7300	1.0	1.0	1.0	1.0	1.0	1.0	1.0	1.0	1.0	1.0	1.0

Table IV-2. (Continued). Inhalation case. AGEDOS grid.

FIFTY-YEAR COMMITTED DOSE EQUIVALENT (NORMALIZED TO ADULT VALUE) FROM RADIONUCLIDE INHALATION

NUCLIDE	INTAKE MODE	AMAD	F1	AGE	LIVER	LUNGS	OVARIES	PANCREAS	ACTIVE MARROW	SKIN	SPLEEN	TESTES	THYMUS	THYROID	UTERUS
U-238	W	0.3	1.6E-01	0	18.	17.	20.	20.	25.	20.	25.	20.	20.	20.	20.
	W	0.3	1.5E-01	100	14.	14.	15.	15.	18.	15.	17.	15.	15.	15.	15.
	W	0.3	1.0E-01	365	7.4	6.8	8.1	8.1	5.5	8.1	8.2	8.1	8.1	8.1	8.1
	W	0.3	7.0E-02	1825	3.2	3.4	3.6	3.6	1.8	3.6	3.8	3.6	3.6	3.6	3.6
	W	0.3	8.0E-02	3650	2.2	2.2	2.2	2.2	1.4	2.2	2.6	2.2	2.2	2.2	2.2
	W	0.3	9.0E-02	5475	1.5	1.5	1.4	1.4	1.3	1.4	1.9	1.4	1.4	1.4	1.4
	W	0.3	5.0E-02	7300	1.0	1.0	1.0	1.0	1.0	1.0	1.0	1.0	1.0	1.0	1.0
	W	1.0	1.6E-01	0	20.	17.	22.	22.	28.	22.	28.	22.	22.	22.	22.
	W	1.0	1.5E-01	100	16.	14.	17.	17.	20.	17.	19.	17.	17.	17.	17.
	W	1.0	1.0E-01	365	7.7	6.8	8.4	8.4	5.7	8.4	8.5	8.4	8.4	8.4	8.4
	W	1.0	7.0E-02	1825	3.3	3.4	3.6	3.6	1.9	3.6	3.8	3.6	3.6	3.6	3.6
	W	1.0	8.0E-02	3650	2.3	2.2	2.3	2.3	1.4	2.3	2.6	2.3	2.3	2.3	2.3
	W	1.0	9.0E-02	5475	1.6	1.5	1.5	1.5	1.3	1.5	1.9	1.5	1.5	1.5	1.5
	W	1.0	5.0E-02	7300	1.0	1.0	1.0	1.0	1.0	1.0	1.0	1.0	1.0	1.0	1.0
	W	5.0	1.6E-01	0	23.	17.	25.	25.	32.	25.	33.	25.	25.	25.	25.
	W	5.0	1.5E-01	100	18.	14.	19.	19.	24.	19.	22.	19.	19.	19.	19.
	W	5.0	1.0E-01	365	8.1	6.8	8.9	8.9	6.0	8.9	9.0	8.9	8.9	8.9	8.9
	W	5.0	7.0E-02	1825	3.4	3.4	3.7	3.7	1.9	3.7	3.9	3.7	3.7	3.7	3.7
	W	5.0	8.0E-02	3650	2.4	2.2	2.4	2.4	1.5	2.4	2.7	2.4	2.4	2.4	2.4
	W	5.0	9.0E-02	5475	1.6	1.5	1.5	1.5	1.3	1.5	2.0	1.5	1.5	1.5	1.5
	W	5.0	5.0E-02	7300	1.0	1.0	1.0	1.0	1.0	1.0	1.0	1.0	1.0	1.0	1.0
	Y	0.3	6.4E-03	0	5.1	5.7	5.7	5.5	4.8	5.6	6.2	5.7	5.3	5.6	5.7
	Y	0.3	6.0E-03	100	4.6	4.9	5.1	4.9	3.9	5.0	5.3	5.1	4.7	5.0	5.1
	Y	0.3	4.0E-03	365	3.7	3.8	4.1	3.9	2.6	4.0	4.2	4.1	3.8	4.0	4.1
	Y	0.3	2.8E-03	1825	2.2	2.3	2.3	2.3	1.5	2.3	2.6	2.3	2.2	2.3	2.3
	Y	0.3	3.2E-03	3650	1.5	1.6	1.5	1.5	1.2	1.5	1.8	1.5	1.4	1.5	1.5
	Y	0.3	3.6E-03	5475	1.1	1.2	1.1	1.1	1.1	1.1	1.2	1.1	1.1	1.1	1.1
	Y	0.3	2.0E-03	7300	1.0	1.0	1.0	1.0	1.0	1.0	1.0	1.0	1.0	1.0	1.0
	Y	1.0	6.4E-03	0	6.1	5.7	6.8	6.6	6.4	6.7	7.7	6.8	6.3	6.7	6.8
	Y	1.0	6.0E-03	100	5.3	4.9	5.9	5.7	5.1	5.8	6.3	5.9	5.5	5.8	5.9
	Y	1.0	4.0E-03	365	3.9	3.8	4.3	4.2	2.8	4.3	4.5	4.4	4.1	4.3	4.4
	Y	1.0	2.8E-03	1825	2.3	2.3	2.4	2.4	1.5	2.4	2.7	2.4	2.3	2.4	2.4
	Y	1.0	3.2E-03	3650	1.6	1.6	1.6	1.5	1.2	1.5	1.8	1.6	1.5	1.5	1.6
	Y	1.0	3.6E-03	5475	1.2	1.2	1.1	1.1	1.1	1.1	1.3	1.1	1.1	1.1	1.1
	Y	1.0	2.0E-03	7300	1.0	1.0	1.0	1.0	1.0	1.0	1.0	1.0	1.0	1.0	1.0
	Y	5.0	6.4E-03	0	10.	5.7	12.	11.	14.	12.	15.	12.	11.	12.	12.
	Y	5.0	6.0E-03	100	8.5	4.9	9.6	9.3	10.	9.5	11.	9.6	9.0	9.5	9.6
	Y	5.0	4.0E-03	365	5.0	3.8	5.6	5.5	3.7	5.6	5.7	5.6	5.4	5.6	5.6
	Y	5.0	2.8E-03	1825	2.6	2.3	2.8	2.8	1.6	2.8	3.0	2.8	2.7	2.8	2.8
	Y	5.0	3.2E-03	3650	1.8	1.6	1.8	1.8	1.3	1.8	2.1	1.8	1.7	1.8	1.8
	Y	5.0	3.6E-03	5475	1.3	1.2	1.2	1.2	1.1	1.2	1.5	1.2	1.2	1.2	1.2
	Y	5.0	2.0E-03	7300	1.0	1.0	1.0	1.0	1.0	1.0	1.0	1.0	1.0	1.0	1.0

Table IV-3. Ingestion case. NRC age groups.

FIFTY-YEAR COMMITTED DOSE EQUIVALENT (NORMALIZED TO ADULT VALUE) FROM RADIONUCLIDE INGESTION

NUCLIDE	INTAKE MODE	F1	AGE	EFFEC-TIVE	ADRENALS	BLADDER WALL	BRAIN	BONE SURFACE	BREAST	STOMACH WALL	SI WALL	ULI WALL	LLI WALL	KIDNEYS
PB-210	G	*	INFANT	6.1	15.	15.	15.	3.8	15.	15.	15.	15.	15.	13.
	G	2.8E-01	CHILD	1.7	3.9	3.9	3.9	1.1	3.9	3.9	3.9	3.9	3.9	3.4
	G	3.6E-01	TEEN	2.2	2.1	2.1	2.1	2.4	2.1	2.1	2.1	2.1	2.0	2.1
	G	2.0E-01	ADULT	1.0	1.0	1.0	1.0	1.0	1.0	1.0	1.0	1.0	1.0	1.0
PO-210	G	*	INFANT	41.	25.	25.	25.	140.	25.	24.	24.	22.	19.	24.
	G	1.4E-01	CHILD	4.7	4.6	4.6	4.6	6.6	4.6	4.6	4.6	4.5	4.2	3.7
	G	1.8E-01	TEEN	2.5	1.9	1.9	1.9	4.2	1.9	1.9	1.9	1.8	1.6	2.2
	G	1.0E-01	ADULT	1.0	1.0	1.0	1.0	1.0	1.0	1.0	1.0	1.0	1.0	1.0
RA-226	G	*	INFANT	16.	11.	11.	11.	19.	11.	11.	11.	10.	9.3	9.8
	G	2.8E-01	CHILD	1.8	2.7	2.7	2.7	1.6	2.7	2.7	2.7	2.8	2.9	1.9
	G	3.6E-01	TEEN	3.2	3.0	3.0	3.0	3.7	3.0	3.0	2.9	2.7	2.2	3.0
	G	2.0E-01	ADULT	1.0	1.0	1.0	1.0	1.0	1.0	1.0	1.0	1.0	1.0	1.0
RA-228	G	*	INFANT	19.	12.	12.	12.	19.	12.	13.	12.	12.	12.	15.
	G	2.8E-01	CHILD	4.1	3.9	3.9	3.9	4.2	3.9	3.9	3.9	3.9	3.8	4.3
	G	3.6E-01	TEEN	2.4	1.9	1.9	1.9	2.7	1.9	1.9	1.9	1.8	1.8	2.1
	G	2.0E-01	ADULT	1.0	1.0	1.0	1.0	1.0	1.0	1.0	1.0	1.0	1.0	1.0
TH-228	G	*	INFANT	230.	81.	80.	81.	260.	80.	72.	61.	30.	17.	100.
	G	5.0E-04	CHILD	6.4	4.3	4.3	4.3	6.5	4.3	4.2	4.1	4.0	3.7	4.4
	G	5.0E-04	TEEN	2.6	1.9	1.9	1.9	2.9	1.9	1.9	1.7	1.4	1.3	2.4
	G	2.0E-04	ADULT	1.0	1.0	1.0	1.0	1.0	1.0	1.0	1.0	1.0	1.0	1.0
TH-230	G	*	INFANT	46.	120.	120.	120.	36.	120.	89.	66.	29.	19.	140.
	G	5.0E-04	CHILD	2.8	4.7	4.7	4.7	2.4	4.7	4.3	4.2	4.0	3.7	6.1
	G	5.0E-04	TEEN	2.2	2.3	2.3	2.3	2.2	2.3	2.0	1.8	1.4	1.3	2.7
	G	2.0E-04	ADULT	1.0	1.0	1.0	1.0	1.0	1.0	1.0	1.0	1.0	1.0	1.0
TH-232	G	*	INFANT	50.	83.	83.	82.	40.	83.	73.	61.	33.	21.	110.
	G	5.0E-04	CHILD	3.1	4.5	4.5	4.5	2.7	4.5	4.4	4.3	4.1	3.8	5.5
	G	5.0E-04	TEEN	2.4	2.6	2.6	2.6	2.3	2.6	2.4	2.2	1.6	1.4	2.8
	G	2.0E-04	ADULT	1.0	1.0	1.0	1.0	1.0	1.0	1.0	1.0	1.0	1.0	1.0

* F1 CHANGES FROM BIRTH TO AGE 1 YEAR

Table IV-3. (Continued). Ingestion case. NRC age groups.

FIFTY-YEAR COMMITTED DOSE EQUIVALENT (NORMALIZED TO ADULT VALUE) FROM RADIONUCLIDE INGESTION

NUCLIDE	INTAKE MODE	F1	AGE	LIVER	LUNGS	OVARIES	PANCREAS	ACTIVE MARROW	SKIN	SPLEEN	TESTES	THYMUS	THYROID	UTERUS
PB-210	G	*	INFANT	16.	15.	15.	15.	2.6	15.	18.	15.	15.	15.	15.
	G	2.8E-01	CHILD	3.9	3.9	3.9	3.9	0.87	3.9	4.5	3.9	3.9	3.9	3.9
	G	3.6E-01	TEEN	2.1	2.1	2.1	2.1	1.3	2.1	2.3	2.1	2.1	2.1	2.1
	G	2.0E-01	ADULT	1.0	1.0	1.0	1.0	1.0	1.0	1.0	1.0	1.0	1.0	1.0
PO-210	G	*	INFANT	28.	25.	25.	25.	52.	25.	35.	25.	25.	25.	25.
	G	1.4E-01	CHILD	4.3	4.6	4.6	4.6	3.3	4.6	5.2	4.6	4.6	4.6	4.6
	G	1.8E-01	TEEN	2.3	1.9	1.9	1.9	2.1	1.9	2.6	1.9	1.9	1.9	1.9
	G	1.0E-01	ADULT	1.0	1.0	1.0	1.0	1.0	1.0	1.0	1.0	1.0	1.0	1.0
RA-226	G	*	INFANT	25.	11.	11.	11.	11.	36.	11.	11.	11.	11.	11.
	G	2.8E-01	CHILD	3.9	2.7	2.7	2.7	1.3	3.8	2.6	2.7	2.7	2.7	2.7
	G	3.6E-01	TEEN	2.4	3.0	3.0	3.0	1.9	3.0	3.4	3.0	3.0	3.0	3.0
	G	2.0E-01	ADULT	1.0	1.0	1.0	1.0	1.0	1.0	1.0	1.0	1.0	1.0	1.0
RA-228	G	*	INFANT	19.	12.	12.	12.	20.	12.	27.	12.	12.	13.	12.
	G	2.8E-01	CHILD	4.9	3.9	3.9	3.9	3.8	3.9	6.4	3.9	3.9	3.9	3.9
	G	3.6E-01	TEEN	2.2	1.9	1.9	1.9	2.0	1.9	2.3	1.9	1.9	1.9	1.9
	G	2.0E-01	ADULT	1.0	1.0	1.0	1.0	1.0	1.0	1.0	1.0	1.0	1.0	1.0
TH-228	G	*	INFANT	130.	81.	79.	80.	410.	81.	200.	80.	81.	81.	80.
	G	5.0E-04	CHILD	5.3	4.3	4.3	4.3	9.1	4.3	7.1	4.3	4.3	4.3	4.3
	G	5.0E-04	TEEN	2.5	1.9	1.9	1.9	2.9	1.9	2.8	1.9	1.9	1.9	1.9
	G	2.0E-04	ADULT	1.0	1.0	1.0	1.0	1.0	1.0	1.0	1.0	1.0	1.0	1.0
TH-230	G	*	INFANT	170.	120.	120.	120.	100.	120.	200.	120.	120.	120.	120.
	G	5.0E-04	CHILD	6.6	4.7	4.7	4.7	4.5	4.7	7.5	4.7	4.7	4.7	4.7
	G	5.0E-04	TEEN	2.7	2.3	2.3	2.3	2.4	2.3	2.8	2.3	2.3	2.3	2.3
	G	2.0E-04	ADULT	1.0	1.0	1.0	1.0	1.0	1.0	1.0	1.0	1.0	1.0	1.0
TH-232	G	*	INFANT	130.	83.	83.	83.	87.	83.	160.	83.	83.	83.	83.
	G	5.0E-04	CHILD	5.9	4.5	4.5	4.5	4.3	4.5	6.7	4.5	4.5	4.5	4.5
	G	5.0E-04	TEEN	2.8	2.6	2.6	2.6	2.4	2.6	2.9	2.6	2.6	2.6	2.6
	G	2.0E-04	ADULT	1.0	1.0	1.0	1.0	1.0	1.0	1.0	1.0	1.0	1.0	1.0

* F1 CHANGES FROM BIRTH TO AGE 1 YEAR

Table IV-3. (Continued). Ingestion case. NRC age groups.

FIFTY-YEAR COMMITTED DOSE EQUIVALENT (NORMALIZED TO ADULT VALUE) FROM RADIONUCLIDE INGESTION

NUCLIDE	INTAKE MODE	F1	AGE	EFFEC-TIVE	ADRENALS	BLADDER WALL	BRAIN	BONE SURFACE	BREAST	STOMACH WALL	SI WALL	ULI WALL	LLI WALL	KIDNEYS
U-234	G-S	*	INFANT	63.	35.	35.	35.	110.	35.	34.	31.	23.	17.	33.
	G-S	7.0E-02	CHILD	4.0	4.8	4.8	4.8	4.3	4.8	4.7	4.6	4.3	3.9	3.9
	G-S	9.0E-02	TEEN	3.1	2.4	2.4	2.4	4.3	2.4	2.3	2.2	1.8	1.5	2.5
	G-S	5.0E-02	ADULT	1.0	1.0	1.0	1.0	1.0	1.0	1.0	1.0	1.0	1.0	1.0
	G-I	*	INFANT	35.	35.	35.	35.	110.	35.	22.	17.	15.	14.	33.
	G-I	2.8E-03	CHILD	3.8	4.8	4.8	4.8	4.3	4.8	3.8	3.9	3.9	3.7	3.9
	G-I	3.6E-03	TEEN	2.0	2.4	2.4	2.4	4.3	2.4	1.6	1.4	1.3	1.2	2.5
	G-I	2.0E-03	ADULT	1.0	1.0	1.0	1.0	1.0	1.0	1.0	1.0	1.0	1.0	1.0
U-235	G-S	*	INFANT	63.	35.	35.	35.	110.	35.	33.	31.	22.	17.	33.
	G-S	7.0E-02	CHILD	4.0	4.8	4.8	4.8	4.3	4.8	4.7	4.6	4.2	3.8	3.9
	G-S	9.0E-02	TEEN	3.1	2.4	2.3	2.4	4.3	2.4	2.3	2.1	1.7	1.4	2.5
	G-S	5.0E-02	ADULT	1.0	1.0	1.0	1.0	1.0	1.0	1.0	1.0	1.0	1.0	1.0
	G-I	*	INFANT	33.	35.	32.	35.	110.	34.	21.	16.	14.	13.	33.
	G-I	2.8E-03	CHILD	3.8	4.8	4.5	4.8	4.3	4.6	3.8	3.9	3.9	3.7	3.9
	G-I	3.6E-03	TEEN	1.9	2.3	2.2	2.4	4.3	2.3	1.6	1.4	1.3	1.2	2.5
	G-I	2.0E-03	ADULT	1.0	1.0	1.0	1.0	1.0	1.0	1.0	1.0	1.0	1.0	1.0
U-238	G-S	*	INFANT	63.	34.	34.	34.	100.	34.	33.	31.	23.	17.	32.
	G-S	7.0E-02	CHILD	3.9	4.8	4.8	4.8	4.3	4.8	4.7	4.6	4.3	3.9	3.9
	G-S	9.0E-02	TEEN	3.1	2.3	2.3	2.3	4.3	2.3	2.3	2.2	1.7	1.4	2.5
	G-S	5.0E-02	ADULT	1.0	1.0	1.0	1.0	1.0	1.0	1.0	1.0	1.0	1.0	1.0
	G-I	*	INFANT	34.	34.	34.	34.	100.	34.	21.	17.	14.	13.	32.
	G-I	2.8E-03	CHILD	3.8	4.8	4.7	4.8	4.3	4.8	3.8	3.9	3.9	3.7	3.9
	G-I	3.6E-03	TEEN	2.0	2.3	2.3	2.4	4.3	2.3	1.6	1.4	1.3	1.2	2.5
	G-I	2.0E-03	ADULT	1.0	1.0	1.0	1.0	1.0	1.0	1.0	1.0	1.0	1.0	1.0

* F1 CHANGES FROM BIRTH TO AGE 1 YEAR

Table IV-3. (Continued). Ingestion case. NRC age groups.

FIFTY-YEAR COMMITTED DOSE EQUIVALENT (NORMALIZED TO ADULT VALUE) FROM RADIONUCLIDE INGESTION

NUCLIDE	INTAKE MODE	F1	AGE	LIVER	LUNGS	OVARIES	PANCREAS	ACTIVE MARROW	SKIN	SPLEEN	TESTES	THYMUS	THYROID	UTERUS
U-234	G-S	*	INFANT	33.	35.	35.	35.	43.	35.	44.	35.	35.	35.	35.
	G-S	7.0E-02	CHILD	4.4	4.8	4.8	4.8	2.4	4.8	5.0	4.8	4.8	4.8	4.8
	G-S	9.0E-02	TEEN	2.5	2.4	2.4	2.4	2.1	2.4	3.1	2.4	2.4	2.4	2.4
	G-S	5.0E-02	ADULT	1.0	1.0	1.0	1.0	1.0	1.0	1.0	1.0	1.0	1.0	1.0
	G-I	*	INFANT	33.	35.	35.	35.	43.	35.	44.	35.	35.	35.	35.
	G-I	2.8E-03	CHILD	4.4	4.8	4.8	4.8	2.4	4.8	5.0	4.8	4.8	4.8	4.8
	G-I	3.6E-03	TEEN	2.5	2.4	2.4	2.4	2.1	2.4	3.1	2.4	2.4	2.4	2.4
	G-I	2.0E-03	ADULT	1.0	1.0	1.0	1.0	1.0	1.0	1.0	1.0	1.0	1.0	1.0
U-235	G-S	*	INFANT	33.	35.	35.	35.	43.	35.	44.	35.	35.	35.	35.
	G-S	7.0E-02	CHILD	4.4	4.8	4.8	4.8	2.4	4.8	5.0	4.8	4.8	4.8	4.8
	G-S	9.0E-02	TEEN	2.5	2.4	2.3	2.4	2.1	2.4	3.1	2.4	2.4	2.4	2.3
	G-S	5.0E-02	ADULT	1.0	1.0	1.0	1.0	1.0	1.0	1.0	1.0	1.0	1.0	1.0
	G-I	*	INFANT	32.	35.	26.	34.	42.	35.	44.	34.	35.	35.	31.
	G-I	2.8E-03	CHILD	4.4	4.8	4.1	4.7	2.4	4.8	5.0	4.8	4.8	4.8	4.5
	G-I	3.6E-03	TEEN	2.4	2.4	2.0	2.3	2.0	2.3	3.1	2.3	2.4	2.4	2.2
	G-I	2.0E-03	ADULT	1.0	1.0	1.0	1.0	1.0	1.0	1.0	1.0	1.0	1.0	1.0
U-238	G-S	*	INFANT	32.	34.	34.	34.	40.	34.	43.	34.	34.	34.	34.
	G-S	7.0E-02	CHILD	4.4	4.8	4.8	4.8	2.4	4.8	5.0	4.8	4.8	4.8	4.8
	G-S	9.0E-02	TEEN	2.5	2.4	2.3	2.3	2.0	2.3	3.1	2.3	2.3	2.3	2.3
	G-S	5.0E-02	ADULT	1.0	1.0	1.0	1.0	1.0	1.0	1.0	1.0	1.0	1.0	1.0
	G-I	*	INFANT	32.	34.	33.	34.	40.	34.	43.	34.	34.	34.	34.
	G-I	2.8E-03	CHILD	4.3	4.8	4.7	4.8	2.4	4.8	5.0	4.8	4.8	4.8	4.7
	G-I	3.6E-03	TEEN	2.5	2.3	2.3	2.3	2.0	2.3	3.1	2.3	2.3	2.3	2.3
	G-I	2.0E-03	ADULT	1.0	1.0	1.0	1.0	1.0	1.0	1.0	1.0	1.0	1.0	1.0

* F1 CHANGES FROM BIRTH TO AGE 1 YEAR

Table IV-4. Ingestion case. NRC age groups. Dose to bone.[1]
Fifty-year committed dose equivalent (normalized to adult value).

Nuclide	Intake Mode	f_1	Age	Bone	Nuclide	Intake Mode	f_1	Age	Bone
Pb-210	G	*	Infant	2.3	U-234	G-S	*	Infant	13.
	G	2.8E-01	Child	0.97		G-S	7.0E-02	Child	1.3
	G	3.6E-01	Teen	2.9		G-S	9.0E-02	Teen	4.9
	G	2.0E-01	Adult	1.0		G-S	5.0E-02	Adult	1.0
Po-210	G	*	Infant	78.		G-I	*	Infant	13.
	G	1.4E-01	Child	4.9		G-I	2.8E-03	Child	1.3
	G	1.8E-01	Teen	3.9		G-I	3.6E-03	Teen	4.9
	G	1.0E-01	Adult	1.0		G-I	2.0E-03	Adult	1.0
Ra-226	G	*	Infant	4.3	U-235	G-S	*	Infant	13.
	G	2.8E-01	Child	0.99		G-S	7.0E-02	Child	1.3
	G	3.6E-01	Teen	4.3		G-S	9.0E-02	Teen	4.9
	G	2.0E-01	Adult	1.0		G-S	5.0E-02	Adult	1.0
Ra-228	G	*	Infant	5.6		G-I	*	Infant	13.
	G	2.8E-01	Child	1.9		G-I	2.8E-03	Child	1.3
	G	3.6E-01	Teen	4.0		G-I	3.6E-03	Teen	4.9
	G	2.0E-01	Adult	1.0		G-I	2.0E-03	Adult	1.0
Th-228	G	*	Infant	230.	U-238	G-S	*	Infant	12.
	G	5.0E-04	Child	7.4		G-S	7.0E-02	Child	1.3
	G	5.0E-04	Teen	3.6		G-S	9.0E-02	Teen	4.9
	G	2.0E-04	Adult	1.0		G-S	5.0E-02	Adult	1.0
Th-230	G	*	Infant	33.		G-I	*	Infant	12.
	G	5.0E-04	Child	2.5		G-I	2.8E-03	Child	1.3
	G	5.0E-04	Teen	2.5		G-I	3.6E-03	Teen	4.9
	G	2.0E-04	Adult	1.0		G-I	2.0E-03	Adult	1.0
Th-232	G	*	Infant	24.					
	G	5.0E-04	Child	2.2					
	G	5.0E-04	Teen	3.1					
	G	2.0E-04	Adult	1.0					

[1]Bone is defined here as the marrow-free skeleton, and doses to bone are defined as in NUREG/CR-150.

*f_1 changes from birth to age 1 year.

Table IV-5. Inhalation case. NRC age groups.

FIFTY-YEAR COMMITTED DOSE EQUIVALENT (NORMALIZED TO ADULT VALUE) FROM RADIONUCLIDE INHALATION

NUCLIDE	INTAKE MODE	AMAD	F1	AGE	EFFEC-TIVE	ADRENALS	BLADDER WALL	BRAIN	BONE SURFACE	BREAST	STOMACH WALL	SI WALL	ULI WALL	LLI WALL	KIDNEYS
PB-210	D	0.3	*	INFANT	2.4	6.0	6.0	6.0	1.5	6.0	6.0	6.0	6.0	6.0	5.1
	D	0.3	2.8E-01	CHILD	1.2	2.8	2.8	2.8	0.81	2.8	2.8	2.8	2.8	2.8	2.4
	D	0.3	3.6E-01	TEEN	1.2	1.2	1.2	1.2	1.4	1.2	1.2	1.2	1.2	1.2	1.2
	D	0.3	2.0E-01	ADULT	1.0	1.0	1.0	1.0	1.0	1.0	1.0	1.0	1.0	1.0	1.0
	D	1.0	*	INFANT	2.5	6.4	6.4	6.4	1.6	6.4	6.4	6.4	6.4	6.4	5.4
	D	1.0	2.8E-01	CHILD	1.2	2.9	2.9	2.9	0.82	2.9	2.9	2.9	2.9	2.9	2.5
	D	1.0	3.6E-01	TEEN	1.3	1.2	1.2	1.2	1.4	1.2	1.2	1.2	1.2	1.2	1.2
	D	1.0	2.0E-01	ADULT	1.0	1.0	1.0	1.0	1.0	1.0	1.0	1.0	1.0	1.0	1.0
	D	5.0	*	INFANT	2.7	7.0	7.0	7.0	1.7	7.0	7.0	7.0	7.0	7.0	5.9
	D	5.0	2.8E-01	CHILD	1.3	2.9	2.9	2.9	0.84	2.9	2.9	2.9	2.9	2.9	2.6
	D	5.0	3.6E-01	TEEN	1.3	1.3	1.3	1.3	1.5	1.3	1.3	1.3	1.3	1.3	1.3
	D	5.0	2.0E-01	ADULT	1.0	1.0	1.0	1.0	1.0	1.0	1.0	1.0	1.0	1.0	1.0
PO-210	D	0.3	*	INFANT	13.	8.2	8.2	8.2	43.	8.2	8.2	8.2	8.2	8.2	7.9
	D	0.3	1.4E-01	CHILD	3.3	3.2	3.2	3.2	4.6	3.2	3.2	3.2	3.2	3.2	2.6
	D	0.3	1.8E-01	TEEN	1.4	1.1	1.1	1.1	2.2	1.1	1.1	1.1	1.1	1.1	1.2
	D	0.3	1.0E-01	ADULT	1.0	1.0	1.0	1.0	1.0	1.0	1.0	1.0	1.0	1.0	1.0
	D	1.0	*	INFANT	13.	8.6	8.6	8.6	45.	8.6	8.6	8.6	8.6	8.6	8.2
	D	1.0	1.4E-01	CHILD	3.3	3.2	3.2	3.2	4.6	3.2	3.2	3.2	3.2	3.2	2.6
	D	1.0	1.8E-01	TEEN	1.4	1.1	1.1	1.1	2.3	1.1	1.1	1.1	1.1	1.1	1.3
	D	1.0	1.0E-01	ADULT	1.0	1.0	1.0	1.0	1.0	1.0	1.0	1.0	1.0	1.0	1.0
	D	5.0	*	INFANT	15.	9.1	9.1	9.1	48.	9.1	9.1	9.1	9.1	9.1	8.7
	D	5.0	1.4E-01	CHILD	3.4	3.3	3.3	3.3	4.7	3.3	3.3	3.3	3.3	3.3	2.7
	D	5.0	1.8E-01	TEEN	1.5	1.1	1.1	1.1	2.3	1.1	1.1	1.1	1.1	1.1	1.3
	D	5.0	1.0E-01	ADULT	1.0	1.0	1.0	1.0	1.0	1.0	1.0	1.0	1.0	1.0	1.0
	W	0.3	*	INFANT	14.	11.	11.	11.	57.	11.	11.	11.	11.	11.	11.
	W	0.3	1.4E-01	CHILD	3.5	3.5	3.5	3.5	5.0	3.5	3.5	3.5	3.5	3.5	2.8
	W	0.3	1.8E-01	TEEN	1.6	1.3	1.3	1.3	2.6	1.3	1.3	1.3	1.3	1.3	1.5
	W	0.3	1.0E-01	ADULT	1.0	1.0	1.0	1.0	1.0	1.0	1.0	1.0	1.0	1.0	1.0
	W	1.0	*	INFANT	15.	12.	12.	12.	63.	12.	12.	12.	12.	12.	12.
	W	1.0	1.4E-01	CHILD	3.5	3.6	3.6	3.6	5.1	3.6	3.6	3.6	3.6	3.5	2.9
	W	1.0	1.8E-01	TEEN	1.6	1.3	1.3	1.3	2.7	1.3	1.3	1.3	1.3	1.3	1.5
	W	1.0	1.0E-01	ADULT	1.0	1.0	1.0	1.0	1.0	1.0	1.0	1.0	1.0	1.0	1.0
	W	5.0	*	INFANT	18.	13.	13.	13.	72.	13.	13.	13.	13.	13.	13.
	W	5.0	1.4E-01	CHILD	3.7	3.7	3.7	3.7	5.3	3.7	3.7	3.7	3.7	3.6	3.0
	W	5.0	1.8E-01	TEEN	1.7	1.4	1.4	1.4	2.9	1.4	1.4	1.4	1.4	1.3	1.6
	W	5.0	1.0E-01	ADULT	1.0	1.0	1.0	1.0	1.0	1.0	1.0	1.0	1.0	1.0	1.0

* F1 CHANGES FROM BIRTH TO AGE 1 YEAR

Table IV-5. (Continued). Inhalation case. NRC age groups.

FIFTY-YEAR COMMITTED DOSE EQUIVALENT (NORMALIZED TO ADULT VALUE) FROM RADIONUCLIDE INHALATION

NUCLIDE	INTAKE MODE	AMAD	F1	AGE	LIVER	LUNGS	OVARIES	PANCREAS	ACTIVE MARROW	SKIN	SPLEEN	TESTES	THYMUS	THYROID	UTERUS
PB-210	D	0.3	*	INFANT	6.3	6.0	6.0	6.0	1.0	6.0	7.1	6.0	6.0	6.0	6.0
	D	0.3	2.8E-01	CHILD	2.8	2.8	2.8	2.8	0.62	2.8	3.2	2.8	2.8	2.8	2.8
	D	0.3	3.6E-01	TEEN	1.2	1.2	1.2	1.2	0.76	1.2	1.3	1.2	1.2	1.2	1.2
	D	0.3	2.0E-01	ADULT	1.0	1.0	1.0	1.0	1.0	1.0	1.0	1.0	1.0	1.0	1.0
	D	1.0	*	INFANT	6.7	6.4	6.4	6.4	1.1	6.4	7.6	6.4	6.4	6.4	6.4
	D	1.0	2.8E-01	CHILD	2.8	2.9	2.9	2.9	0.63	2.9	3.3	2.9	2.9	2.9	2.9
	D	1.0	3.6E-01	TEEN	1.2	1.2	1.2	1.2	0.79	1.2	1.4	1.2	1.2	1.2	1.2
	D	1.0	2.0E-01	ADULT	1.0	1.0	1.0	1.0	1.0	1.0	1.0	1.0	1.0	1.0	1.0
	D	5.0	*	INFANT	7.3	7.0	7.0	7.0	1.2	7.0	8.3	7.0	7.0	7.0	7.0
	D	5.0	2.8E-01	CHILD	2.9	2.9	2.9	2.9	0.65	2.9	3.4	2.9	2.9	2.9	2.9
	D	5.0	3.6E-01	TEEN	1.3	1.3	1.3	1.3	0.82	1.3	1.4	1.3	1.3	1.3	1.3
	D	5.0	2.0E-01	ADULT	1.0	1.0	1.0	1.0	1.0	1.0	1.0	1.0	1.0	1.0	1.0
PO-210	D	0.3	*	INFANT	9.1	11.	8.2	8.2	16.	8.2	11.	8.2	8.2	8.2	8.2
	D	0.3	1.4E-01	CHILD	3.0	3.4	3.2	3.2	2.3	3.2	3.6	3.2	3.2	3.2	3.2
	D	0.3	1.8E-01	TEEN	1.3	1.3	1.1	1.1	1.2	1.1	1.4	1.1	1.1	1.1	1.1
	D	0.3	1.0E-01	ADULT	1.0	1.0	1.0	1.0	1.0	1.0	1.0	1.0	1.0	1.0	1.0
	D	1.0	*	INFANT	9.5	11.	8.6	8.6	16.	8.6	12.	8.6	8.6	8.6	8.6
	D	1.0	1.4E-01	CHILD	3.0	3.3	3.2	3.2	2.3	3.2	3.6	3.2	3.2	3.2	3.2
	D	1.0	1.8E-01	TEEN	1.3	1.3	1.1	1.1	1.2	1.1	1.4	1.1	1.1	1.1	1.1
	D	1.0	1.0E-01	ADULT	1.0	1.0	1.0	1.0	1.0	1.0	1.0	1.0	1.0	1.0	1.0
	D	5.0	*	INFANT	10.	9.9	9.1	9.1	17.	9.1	13.	9.1	9.1	9.1	9.1
	D	5.0	1.4E-01	CHILD	3.0	3.3	3.3	3.3	2.4	3.3	3.7	3.3	3.3	3.3	3.3
	D	5.0	1.8E-01	TEEN	1.3	1.2	1.1	1.1	1.2	1.1	1.5	1.1	1.1	1.1	1.1
	D	5.0	1.0E-01	ADULT	1.0	1.0	1.0	1.0	1.0	1.0	1.0	1.0	1.0	1.0	1.0
	W	0.3	*	INFANT	12.	12.	11.	11.	21.	11.	15.	11.	11.	11.	11.
	W	0.3	1.4E-01	CHILD	3.2	3.4	3.5	3.5	2.5	3.5	3.9	3.5	3.5	3.5	3.5
	W	0.3	1.8E-01	TEEN	1.5	1.5	1.3	1.3	1.4	1.3	1.7	1.3	1.3	1.3	1.3
	W	0.3	1.0E-01	ADULT	1.0	1.0	1.0	1.0	1.0	1.0	1.0	1.0	1.0	1.0	1.0
	W	1.0	*	INFANT	14.	12.	12.	12.	23.	12.	17.	12.	12.	12.	12.
	W	1.0	1.4E-01	CHILD	3.3	3.4	3.6	3.6	2.6	3.6	4.0	3.6	3.6	3.6	3.6
	W	1.0	1.8E-01	TEEN	1.5	1.5	1.3	1.3	1.5	1.3	1.7	1.3	1.3	1.3	1.3
	W	1.0	1.0E-01	ADULT	1.0	1.0	1.0	1.0	1.0	1.0	1.0	1.0	1.0	1.0	1.0
	W	5.0	*	INFANT	15.	12.	13.	13.	26.	13.	19.	13.	13.	13.	13.
	W	5.0	1.4E-01	CHILD	3.4	3.4	3.7	3.7	2.6	3.7	4.1	3.7	3.7	3.7	3.7
	W	5.0	1.8E-01	TEEN	1.6	1.5	1.4	1.4	1.5	1.4	1.8	1.4	1.4	1.4	1.4
	W	5.0	1.0E-01	ADULT	1.0	1.0	1.0	1.0	1.0	1.0	1.0	1.0	1.0	1.0	1.0

* F1 CHANGES FROM BIRTH TO AGE 1 YEAR

Table IV-5. (Continued). Inhalation case. NRC age groups.

FIFTY-YEAR COMMITTED DOSE EQUIVALENT (NORMALIZED TO ADULT VALUE) FROM RADIONUCLIDE INHALATION

NUCLIDE	INTAKE MODE	AMAD	F1	AGE	EFFEC-TIVE	ADRENALS	BLADDER WALL	BRAIN	BONE SURFACE	BREAST	STOMACH WALL	SI WALL	ULI WALL	LLI WALL	KIDNEYS
RA-226	W	0.3	*	INFANT	12.	7.8	7.8	7.8	10.	7.8	7.9	7.8	7.8	7.7	5.1
	W	0.3	2.8E-01	CHILD	3.1	2.5	2.5	2.5	1.3	2.5	2.5	2.5	2.5	2.6	1.4
	W	0.3	3.6E-01	TEEN	1.6	1.8	1.8	1.8	2.7	1.8	1.8	1.8	1.8	1.7	1.7
	W	0.3	2.0E-01	ADULT	1.0	1.0	1.0	1.0	1.0	1.0	1.0	1.0	1.0	1.0	1.0
	W	1.0	*	INFANT	12.	7.7	7.8	7.7	11.	7.8	7.8	7.8	7.7	7.6	5.7
	W	1.0	2.8E-01	CHILD	3.0	2.4	2.5	2.4	1.3	2.5	2.5	2.5	2.5	2.6	1.5
	W	1.0	3.6E-01	TEEN	1.7	2.0	2.0	2.0	2.8	2.0	2.0	2.0	1.9	1.8	2.0
	W	1.0	2.0E-01	ADULT	1.0	1.0	1.0	1.0	1.0	1.0	1.0	1.0	1.0	1.0	1.0
	W	5.0	*	INFANT	11.	7.8	7.8	7.8	13.	7.8	7.9	7.8	7.8	7.6	6.7
	W	5.0	2.8E-01	CHILD	2.4	2.4	2.4	2.4	1.4	2.4	2.4	2.4	2.5	2.6	1.6
	W	5.0	3.6E-01	TEEN	2.1	2.3	2.3	2.3	3.0	2.3	2.3	2.3	2.2	2.0	2.3
	W	5.0	2.0E-01	ADULT	1.0	1.0	1.0	1.0	1.0	1.0	1.0	1.0	1.0	1.0	1.0
RA-228	W	0.3	*	INFANT	5.4	2.8	2.8	2.8	2.7	2.8	2.8	2.8	2.9	3.0	2.7
	W	0.3	2.8E-01	CHILD	2.1	1.7	1.7	1.7	1.3	1.7	1.7	1.7	1.7	1.7	1.5
	W	0.3	3.6E-01	TEEN	1.3	0.88	0.87	0.88	1.2	0.88	0.87	0.87	0.87	0.88	1.0
	W	0.3	2.0E-01	ADULT	1.0	1.0	1.0	1.0	1.0	1.0	1.0	1.0	1.0	1.0	1.0
	W	1.0	*	INFANT	5.2	3.2	3.2	3.2	2.9	3.2	3.2	3.2	3.2	3.4	2.9
	W	1.0	2.8E-01	CHILD	2.0	1.8	1.8	1.8	1.4	1.8	1.8	1.8	1.9	1.9	1.6
	W	1.0	3.6E-01	TEEN	1.3	0.94	0.93	0.94	1.4	0.94	0.93	0.93	0.93	0.94	1.1
	W	1.0	2.0E-01	ADULT	1.0	1.0	1.0	1.0	1.0	1.0	1.0	1.0	1.0	1.0	1.0
	W	5.0	*	INFANT	4.5	4.0	4.0	4.0	3.5	4.0	4.1	4.1	4.1	4.3	3.7
	W	5.0	2.8E-01	CHILD	1.8	2.2	2.2	2.2	1.4	2.2	2.2	2.2	2.2	2.3	1.8
	W	5.0	3.6E-01	TEEN	1.5	1.1	1.1	1.1	1.7	1.1	1.1	1.1	1.1	1.1	1.2
	W	5.0	2.0E-01	ADULT	1.0	1.0	1.0	1.0	1.0	1.0	1.0	1.0	1.0	1.0	1.0
TH-228	W	0.3	*	INFANT	9.6	3.3	3.3	3.3	7.7	3.3	3.3	3.3	3.4	3.5	3.8
	W	0.3	5.0E-04	CHILD	3.0	1.7	1.7	1.7	2.6	1.7	1.7	1.7	1.7	1.7	1.9
	W	0.3	5.0E-04	TEEN	1.2	0.81	0.81	0.81	1.1	0.81	0.81	0.81	0.81	0.81	0.99
	W	0.3	2.0E-04	ADULT	1.0	1.0	1.0	1.0	1.0	1.0	1.0	1.0	1.0	1.0	1.0
	W	1.0	*	INFANT	9.0	3.4	3.4	3.4	7.9	3.4	3.4	3.4	3.4	3.5	3.9
	W	1.0	5.0E-04	CHILD	2.9	1.7	1.7	1.7	2.6	1.7	1.7	1.7	1.7	1.7	1.9
	W	1.0	5.0E-04	TEEN	1.2	0.80	0.80	0.80	1.1	0.80	0.80	0.80	0.81	0.81	0.99
	W	1.0	2.0E-04	ADULT	1.0	1.0	1.0	1.0	1.0	1.0	1.0	1.0	1.0	1.0	1.0
	W	5.0	*	INFANT	9.0	3.4	3.4	3.4	8.2	3.4	3.4	3.4	3.5	3.6	4.0
	W	5.0	5.0E-04	CHILD	2.8	1.7	1.7	1.7	2.6	1.7	1.7	1.7	1.7	1.8	1.9
	W	5.0	5.0E-04	TEEN	1.2	0.80	0.80	0.80	1.1	0.80	0.80	0.80	0.80	0.81	0.99
	W	5.0	2.0E-04	ADULT	1.0	1.0	1.0	1.0	1.0	1.0	1.0	1.0	1.0	1.0	1.0

* F1 CHANGES FROM BIRTH TO AGE 1 YEAR

Table IV-5. (Continued). Inhalation case. NRC age groups.

FIFTY-YEAR COMMITTED DOSE EQUIVALENT (NORMALIZED TO ADULT VALUE) FROM RADIONUCLIDE INHALATION

NUCLIDE	INTAKE MODE	AMAD	F1	AGE	LIVER	LUNGS	OVARIES	PANCREAS	ACTIVE MARROW	SKIN	SPLEEN	TESTES	THYMUS	THYROID	UTERUS
RA-226	W	0.3	*	INFANT	13.	12.	7.8	7.8	5.8	42.	6.5	7.8	7.8	7.8	7.8
	W	0.3	2.8E-01	CHILD	3.0	3.4	2.5	2.5	1.1	3.2	2.2	2.5	2.5	2.5	2.5
	W	0.3	3.6E-01	TEEN	1.7	1.5	1.8	1.8	1.4	1.8	2.3	1.8	1.8	1.8	1.8
	W	0.3	2.0E-01	ADULT	1.0	1.0	1.0	1.0	1.0	1.0	1.0	1.0	1.0	1.0	1.0
	W	1.0	*	INFANT	15.	12.	7.8	7.8	6.5	37.	7.1	7.8	7.8	7.8	7.8
	W	1.0	2.8E-01	CHILD	3.1	3.4	2.5	2.5	1.1	3.2	2.3	2.5	2.5	2.5	2.5
	W	1.0	3.6E-01	TEEN	1.8	1.5	2.0	2.0	1.4	2.0	2.4	2.0	2.0	2.0	2.0
	W	1.0	2.0E-01	ADULT	1.0	1.0	1.0	1.0	1.0	1.0	1.0	1.0	1.0	1.0	1.0
	W	5.0	*	INFANT	17.	12.	7.8	7.8	7.4	30.	7.9	7.8	7.8	7.8	7.8
	W	5.0	2.8E-01	CHILD	3.3	3.4	2.4	2.4	1.1	3.3	2.3	2.4	2.4	2.4	2.4
	W	5.0	3.6E-01	TEEN	1.9	1.5	2.3	2.3	1.5	2.3	2.6	2.3	2.3	2.3	2.3
	W	5.0	2.0E-01	ADULT	1.0	1.0	1.0	1.0	1.0	1.0	1.0	1.0	1.0	1.0	1.0
RA-228	W	0.3	*	INFANT	3.6	10.	2.8	2.8	2.5	2.8	4.7	2.8	2.8	2.8	2.8
	W	0.3	2.8E-01	CHILD	1.8	3.3	1.7	1.7	1.5	1.7	2.3	1.7	1.7	1.7	1.7
	W	0.3	3.6E-01	TEEN	1.0	1.5	0.87	0.88	1.0	0.87	1.1	0.87	0.87	0.87	0.87
	W	0.3	2.0E-01	ADULT	1.0	1.0	1.0	1.0	1.0	1.0	1.0	1.0	1.0	1.0	1.0
	W	1.0	*	INFANT	4.0	10.	3.2	3.2	2.6	3.2	5.1	3.2	3.2	3.2	3.2
	W	1.0	2.8E-01	CHILD	1.9	3.3	1.8	1.8	1.4	1.8	2.4	1.8	1.8	1.8	1.8
	W	1.0	3.6E-01	TEEN	1.1	1.5	0.93	0.94	1.1	0.93	1.2	0.93	0.93	0.93	0.93
	W	1.0	2.0E-01	ADULT	1.0	1.0	1.0	1.0	1.0	1.0	1.0	1.0	1.0	1.0	1.0
	W	5.0	*	INFANT	5.0	10.	4.0	4.0	2.7	4.0	6.2	4.0	4.0	4.0	4.0
	W	5.0	2.8E-01	CHILD	2.2	3.2	2.2	2.2	1.3	2.2	2.7	2.2	2.2	2.2	2.2
	W	5.0	3.6E-01	TEEN	1.2	1.5	1.1	1.1	1.2	1.1	1.3	1.1	1.1	1.1	1.1
	W	5.0	2.0E-01	ADULT	1.0	1.0	1.0	1.0	1.0	1.0	1.0	1.0	1.0	1.0	1.0
TH-228	W	0.3	*	INFANT	4.9	12.	3.3	3.3	12.	3.3	7.0	3.3	3.3	3.3	3.3
	W	0.3	5.0E-04	CHILD	2.2	3.3	1.7	1.7	3.8	1.7	3.0	1.7	1.7	1.7	1.7
	W	0.3	5.0E-04	TEEN	1.0	1.5	0.81	0.81	1.2	0.81	1.2	0.81	0.81	0.81	0.81
	W	0.3	2.0E-04	ADULT	1.0	1.0	1.0	1.0	1.0	1.0	1.0	1.0	1.0	1.0	1.0
	W	1.0	*	INFANT	5.0	12.	3.4	3.4	12.	3.4	7.2	3.4	3.4	3.4	3.4
	W	1.0	5.0E-04	CHILD	2.2	3.3	1.7	1.7	3.8	1.7	3.0	1.7	1.7	1.7	1.7
	W	1.0	5.0E-04	TEEN	1.0	1.5	0.80	0.80	1.2	0.80	1.2	0.80	0.80	0.80	0.80
	W	1.0	2.0E-04	ADULT	1.0	1.0	1.0	1.0	1.0	1.0	1.0	1.0	1.0	1.0	1.0
	W	5.0	*	INFANT	5.2	11.	3.4	3.4	13.	3.4	7.4	3.4	3.4	3.4	3.4
	W	5.0	5.0E-04	CHILD	2.2	3.2	1.7	1.7	3.8	1.7	3.0	1.7	1.7	1.7	1.7
	W	5.0	5.0E-04	TEEN	1.0	1.4	0.80	0.80	1.2	0.80	1.2	0.80	0.80	0.80	0.80
	W	5.0	2.0E-04	ADULT	1.0	1.0	1.0	1.0	1.0	1.0	1.0	1.0	1.0	1.0	1.0

* F1 CHANGES FROM BIRTH TO AGE 1 YEAR

Table IV-5. (Continued). Inhalation case. NRC age groups.

FIFTY-YEAR COMMITTED DOSE EQUIVALENT (NORMALIZED TO ADULT VALUE) FROM RADIONUCLIDE INHALATION

NUCLIDE	INTAKE MODE	AMAD	F1	AGE	EFFEC-TIVE	ADRENALS	BLADDER WALL	BRAIN	BONE SURFACE	BREAST	STOMACH WALL	SI WALL	ULI WALL	LLI WALL	KIDNEYS
TH-228	Y	0.3	*	INFANT	7.7	3.0	2.9	2.9	5.8	3.0	2.9	2.9	3.0	3.4	3.2
	Y	0.3	5.0E-04	CHILD	3.0	1.5	1.5	1.5	2.3	1.6	1.5	1.5	1.6	1.7	1.7
	Y	0.3	5.0E-04	TEEN	1.4	0.91	0.90	0.90	1.1	0.91	0.90	0.90	0.91	0.92	1.0
	Y	0.3	2.0E-04	ADULT	1.0	1.0	1.0	1.0	1.0	1.0	1.0	1.0	1.0	1.0	1.0
	Y	1.0	*	INFANT	7.8	3.3	3.3	3.3	7.0	3.3	3.3	3.3	3.5	4.2	3.7
	Y	1.0	5.0E-04	CHILD	3.0	1.6	1.5	1.5	2.4	1.6	1.6	1.6	1.6	1.8	1.7
	Y	1.0	5.0E-04	TEEN	1.4	0.90	0.89	0.89	1.1	0.90	0.89	0.89	0.90	0.92	1.0
	Y	1.0	2.0E-04	ADULT	1.0	1.0	1.0	1.0	1.0	1.0	1.0	1.0	1.0	1.0	1.0
	Y	5.0	*	INFANT	8.3	4.4	4.4	4.4	10.	4.4	4.4	4.4	4.8	6.0	5.1
	Y	5.0	5.0E-04	CHILD	3.0	1.7	1.7	1.7	2.6	1.7	1.7	1.7	1.8	2.1	1.8
	Y	5.0	5.0E-04	TEEN	1.4	0.87	0.86	0.86	1.1	0.87	0.87	0.87	0.88	0.93	1.0
	Y	5.0	2.0E-04	ADULT	1.0	1.0	1.0	1.0	1.0	1.0	1.0	1.0	1.0	1.0	1.0
TH-230	W	0.3	*	INFANT	1.8	3.7	3.7	3.7	1.2	3.7	3.7	3.7	3.7	3.8	4.5
	W	0.3	5.0E-04	CHILD	1.1	1.8	1.8	1.8	0.95	1.8	1.8	1.8	1.8	1.9	2.4
	W	0.3	5.0E-04	TEEN	0.91	0.92	0.92	0.92	0.88	0.92	0.92	0.92	0.92	0.92	1.1
	W	0.3	2.0E-04	ADULT	1.0	1.0	1.0	1.0	1.0	1.0	1.0	1.0	1.0	1.0	1.0
	W	1.0	*	INFANT	1.8	3.7	3.7	3.7	1.3	3.7	3.8	3.8	3.8	3.9	4.6
	W	1.0	5.0E-04	CHILD	1.1	1.8	1.8	1.8	0.95	1.8	1.8	1.8	1.9	1.9	2.4
	W	1.0	5.0E-04	TEEN	0.91	0.91	0.91	0.91	0.88	0.91	0.91	0.91	0.92	0.92	1.1
	W	1.0	2.0E-04	ADULT	1.0	1.0	1.0	1.0	1.0	1.0	1.0	1.0	1.0	1.0	1.0
	W	5.0	*	INFANT	1.7	3.9	3.9	3.9	1.3	3.9	3.9	3.9	3.9	4.0	4.7
	W	5.0	5.0E-04	CHILD	1.1	1.9	1.9	1.9	0.95	1.9	1.9	1.9	1.9	1.9	2.4
	W	5.0	5.0E-04	TEEN	0.89	0.91	0.91	0.91	0.88	0.91	0.91	0.91	0.91	0.92	1.1
	W	5.0	2.0E-04	ADULT	1.0	1.0	1.0	1.0	1.0	1.0	1.0	1.0	1.0	1.0	1.0
	Y	0.3	*	INFANT	2.9	2.2	2.2	2.2	1.0	2.2	2.2	2.3	2.3	2.4	2.8
	Y	0.3	5.0E-04	CHILD	1.6	1.4	1.4	1.4	0.93	1.4	1.4	1.4	1.4	1.4	1.8
	Y	0.3	5.0E-04	TEEN	1.1	0.99	0.99	0.99	0.98	0.99	0.99	0.99	0.99	1.0	1.0
	Y	0.3	2.0E-04	ADULT	1.0	1.0	1.0	1.0	1.0	1.0	1.0	1.0	1.0	1.0	1.0
	Y	1.0	*	INFANT	2.9	2.5	2.5	2.5	1.1	2.5	2.5	2.5	2.6	2.9	3.1
	Y	1.0	5.0E-04	CHILD	1.6	1.4	1.4	1.4	0.93	1.4	1.4	1.4	1.5	1.5	1.8
	Y	1.0	5.0E-04	TEEN	1.1	0.99	0.99	0.99	0.98	0.99	0.99	0.99	0.99	1.0	1.1
	Y	1.0	2.0E-04	ADULT	1.0	1.0	1.0	1.0	1.0	1.0	1.0	1.0	1.0	1.0	1.0
	Y	5.0	*	INFANT	2.8	3.5	3.5	3.5	1.3	3.5	3.5	3.5	3.9	4.6	4.3
	Y	5.0	5.0E-04	CHILD	1.5	1.6	1.6	1.6	0.95	1.6	1.6	1.6	1.7	1.8	2.0
	Y	5.0	5.0E-04	TEEN	1.0	0.97	0.97	0.97	0.95	0.97	0.97	0.98	0.99	1.0	1.1
	Y	5.0	2.0E-04	ADULT	1.0	1.0	1.0	1.0	1.0	1.0	1.0	1.0	1.0	1.0	1.0

* F1 CHANGES FROM BIRTH TO AGE 1 YEAR

Table IV-5. (Continued). Inhalation case. NRC age groups.

FIFTY-YEAR COMMITTED DOSE EQUIVALENT (NORMALIZED TO ADULT VALUE) FROM RADIONUCLIDE INHALATION

NUCLIDE	INTAKE MODE	AMAD	F1	AGE	LIVER	LUNGS	OVARIES	PANCREAS	ACTIVE MARROW	SKIN	SPLEEN	TESTES	THYMUS	THYROID	UTERUS
TH-228	Y	0.3	*	INFANT	4.0	7.8	2.9	2.9	8.7	2.9	5.6	2.9	2.9	2.9	2.9
	Y	0.3	5.0E-04	CHILD	2.0	3.1	1.5	1.5	3.2	1.5	2.6	1.5	1.5	1.5	1.5
	Y	0.3	5.0E-04	TEEN	1.0	1.4	0.90	0.91	1.1	0.90	1.1	0.90	0.91	0.90	0.90
	Y	0.3	2.0E-04	ADULT	1.0	1.0	1.0	1.0	1.0	1.0	1.0	1.0	1.0	1.0	1.0
	Y	1.0	*	INFANT	4.7	7.8	3.3	3.3	11.	3.3	6.5	3.3	3.3	3.3	3.3
	Y	1.0	5.0E-04	CHILD	2.0	3.1	1.5	1.6	3.3	1.5	2.7	1.5	1.6	1.6	1.5
	Y	1.0	5.0E-04	TEEN	1.0	1.4	0.89	0.90	1.1	0.89	1.1	0.89	0.90	0.89	0.89
	Y	1.0	2.0E-04	ADULT	1.0	1.0	1.0	1.0	1.0	1.0	1.0	1.0	1.0	1.0	1.0
	Y	5.0	*	INFANT	6.5	7.8	4.4	4.4	16.	4.4	9.2	4.4	4.4	4.4	4.4
	Y	5.0	5.0E-04	CHILD	2.2	3.1	1.7	1.7	3.6	1.7	2.9	1.7	1.7	1.7	1.7
	Y	5.0	5.0E-04	TEEN	1.0	1.4	0.86	0.86	1.2	0.86	1.2	0.86	0.87	0.86	0.86
	Y	5.0	2.0E-04	ADULT	1.0	1.0	1.0	1.0	1.0	1.0	1.0	1.0	1.0	1.0	1.0
TH-230	W	0.3	*	INFANT	5.2	11.	3.7	3.7	3.3	3.7	6.0	3.7	3.7	3.7	3.7
	W	0.3	5.0E-04	CHILD	2.6	3.3	1.8	1.8	1.8	1.8	2.9	1.8	1.8	1.8	1.8
	W	0.3	5.0E-04	TEEN	1.1	1.5	0.92	0.92	0.97	0.92	1.1	0.92	0.92	0.92	0.92
	W	0.3	2.0E-04	ADULT	1.0	1.0	1.0	1.0	1.0	1.0	1.0	1.0	1.0	1.0	1.0
	W	1.0	*	INFANT	5.3	11.	3.7	3.7	3.3	3.7	6.2	3.7	3.7	3.7	3.7
	W	1.0	5.0E-04	CHILD	2.6	3.3	1.8	1.8	1.8	1.8	2.9	1.8	1.8	1.8	1.8
	W	1.0	5.0E-04	TEEN	1.1	1.5	0.91	0.91	0.96	0.91	1.1	0.91	0.91	0.91	0.91
	W	1.0	2.0E-04	ADULT	1.0	1.0	1.0	1.0	1.0	1.0	1.0	1.0	1.0	1.0	1.0
	W	5.0	*	INFANT	5.4	9.9	3.9	3.9	3.4	3.9	6.3	3.9	3.9	3.9	3.9
	W	5.0	5.0E-04	CHILD	2.6	3.0	1.9	1.9	1.8	1.9	2.9	1.9	1.9	1.9	1.9
	W	5.0	5.0E-04	TEEN	1.1	1.4	0.91	0.91	0.96	0.91	1.1	0.91	0.91	0.91	0.91
	W	5.0	2.0E-04	ADULT	1.0	1.0	1.0	1.0	1.0	1.0	1.0	1.0	1.0	1.0	1.0
	Y	0.3	*	INFANT	3.1	4.8	2.2	2.2	2.1	2.2	3.6	2.2	2.2	2.2	2.2
	Y	0.3	5.0E-04	CHILD	1.9	2.3	1.4	1.4	1.4	1.4	2.0	1.4	1.4	1.4	1.4
	Y	0.3	5.0E-04	TEEN	1.0	1.2	0.99	0.99	1.0	0.99	1.1	0.99	0.99	0.99	0.99
	Y	0.3	2.0E-04	ADULT	1.0	1.0	1.0	1.0	1.0	1.0	1.0	1.0	1.0	1.0	1.0
	Y	1.0	*	INFANT	3.4	4.8	2.5	2.5	2.3	2.5	3.9	2.5	2.5	2.5	2.5
	Y	1.0	5.0E-04	CHILD	1.9	2.3	1.4	1.4	1.4	1.4	2.1	1.4	1.4	1.4	1.4
	Y	1.0	5.0E-04	TEEN	1.1	1.2	0.99	0.99	1.0	0.99	1.1	0.99	0.99	0.99	0.99
	Y	1.0	2.0E-04	ADULT	1.0	1.0	1.0	1.0	1.0	1.0	1.0	1.0	1.0	1.0	1.0
	Y	5.0	*	INFANT	4.8	4.8	3.5	3.5	3.1	3.5	5.6	3.5	3.5	3.5	3.5
	Y	5.0	5.0E-04	CHILD	2.1	2.3	1.6	1.6	1.5	1.6	2.4	1.6	1.6	1.6	1.6
	Y	5.0	5.0E-04	TEEN	1.1	1.2	0.97	0.97	1.0	0.97	1.1	0.97	0.97	0.97	0.97
	Y	5.0	2.0E-04	ADULT	1.0	1.0	1.0	1.0	1.0	1.0	1.0	1.0	1.0	1.0	1.0

* F1 CHANGES FROM BIRTH TO AGE 1 YEAR

Table IV-5. (Continued). Inhalation case. NRC age groups.

FIFTY-YEAR COMMITTED DOSE EQUIVALENT (NORMALIZED TO ADULT VALUE) FROM RADIONUCLIDE INHALATION

NUCLIDE	INTAKE MODE	AMAD	F1	AGE	EFFEC-TIVE	ADRENALS	BLADDER WALL	BRAIN	BONE SURFACE	BREAST	STOMACH WALL	SI WALL	ULI WALL	LLI WALL	KIDNEYS
TH-232	W	0.3	*	INFANT	2.0	2.8	2.9	2.8	1.4	2.8	2.9	2.9	2.9	2.9	3.7
	W	0.3	5.0E-04	CHILD	1.3	1.8	1.8	1.8	1.1	1.8	1.8	1.8	1.8	1.8	2.2
	W	0.3	5.0E-04	TEEN	0.96	1.0	1.0	1.0	0.94	1.0	1.0	1.0	1.0	1.0	1.1
	W	0.3	2.0E-04	ADULT	1.0	1.0	1.0	1.0	1.0	1.0	1.0	1.0	1.0	1.0	1.0
	W	1.0	*	INFANT	1.9	2.9	2.9	2.9	1.4	2.9	2.9	2.9	2.9	3.0	3.7
	W	1.0	5.0E-04	CHILD	1.2	1.8	1.8	1.8	1.1	1.8	1.8	1.8	1.8	1.8	2.2
	W	1.0	5.0E-04	TEEN	0.96	1.0	1.0	1.0	0.94	1.0	1.0	1.0	1.0	1.0	1.1
	W	1.0	2.0E-04	ADULT	1.0	1.0	1.0	1.0	1.0	1.0	1.0	1.0	1.0	1.0	1.0
	W	5.0	*	INFANT	1.9	2.9	3.0	2.9	1.5	3.0	3.0	3.0	3.0	3.1	3.8
	W	5.0	5.0E-04	CHILD	1.2	1.8	1.8	1.8	1.1	1.8	1.8	1.8	1.8	1.8	2.2
	W	5.0	5.0E-04	TEEN	0.95	1.0	1.0	1.0	0.94	1.0	1.0	1.0	1.0	1.0	1.1
	W	5.0	2.0E-04	ADULT	1.0	1.0	1.0	1.0	1.0	1.0	1.0	1.0	1.0	1.0	1.0
	Y	0.3	*	INFANT	2.3	1.9	1.9	1.9	1.2	1.9	1.9	1.9	1.9	1.9	2.3
	Y	0.3	5.0E-04	CHILD	1.5	1.4	1.4	1.4	1.0	1.4	1.4	1.4	1.4	1.4	1.6
	Y	0.3	5.0E-04	TEEN	1.0	1.0	1.0	1.0	1.0	1.0	1.0	1.0	1.0	1.0	1.1
	Y	0.3	2.0E-04	ADULT	1.0	1.0	1.0	1.0	1.0	1.0	1.0	1.0	1.0	1.0	1.0
	Y	1.0	*	INFANT	2.3	2.0	2.0	2.0	1.3	2.0	2.0	2.0	2.0	2.1	2.5
	Y	1.0	5.0E-04	CHILD	1.5	1.4	1.4	1.4	1.0	1.4	1.4	1.4	1.4	1.4	1.6
	Y	1.0	5.0E-04	TEEN	1.0	1.0	1.0	1.0	0.99	1.0	1.0	1.0	1.0	1.0	1.1
	Y	1.0	2.0E-04	ADULT	1.0	1.0	1.0	1.0	1.0	1.0	1.0	1.0	1.0	1.0	1.0
	Y	5.0	*	INFANT	2.3	2.6	2.6	2.6	1.6	2.6	2.6	2.6	2.8	3.1	3.3
	Y	5.0	5.0E-04	CHILD	1.4	1.5	1.5	1.5	1.1	1.5	1.5	1.5	1.5	1.6	1.8
	Y	5.0	5.0E-04	TEEN	1.0	1.0	1.0	1.0	0.99	1.0	1.0	1.0	1.1	1.1	1.1
	Y	5.0	2.0E-04	ADULT	1.0	1.0	1.0	1.0	1.0	1.0	1.0	1.0	1.0	1.0	1.0

* F1 CHANGES FROM BIRTH TO AGE 1 YEAR

Table IV-5. (Continued). Inhalation case. NRC age groups.

FIFTY-YEAR COMMITTED DOSE EQUIVALENT (NORMALIZED TO ADULT VALUE) FROM RADIONUCLIDE INHALATION

NUCLIDE	INTAKE MODE	AMAD	F1	AGE	LIVER	LUNGS	OVARIES	PANCREAS	ACTIVE MARROW	SKIN	SPLEEN	TESTES	THYMUS	THYROID	UTERUS
TH-232	W	0.3	*	INFANT	4.2	11.	2.9	2.8	2.9	2.9	5.2	2.9	2.9	2.9	2.9
	W	0.3	5.0E-04	CHILD	2.3	3.2	1.8	1.8	1.7	1.8	2.7	1.8	1.8	1.8	1.8
	W	0.3	5.0E-04	TEEN	1.1	1.5	1.0	1.0	0.97	1.0	1.1	1.0	1.0	1.0	1.0
	W	0.3	2.0E-04	ADULT	1.0	1.0	1.0	1.0	1.0	1.0	1.0	1.0	1.0	1.0	1.0
	W	1.0	*	INFANT	4.3	10.	2.9	2.9	3.0	2.9	5.2	2.9	2.9	2.9	2.9
	W	1.0	5.0E-04	CHILD	2.4	3.1	1.8	1.8	1.7	1.8	2.7	1.8	1.8	1.8	1.8
	W	1.0	5.0E-04	TEEN	1.1	1.4	1.0	1.0	0.97	1.0	1.1	1.0	1.0	1.0	1.0
	W	1.0	2.0E-04	ADULT	1.0	1.0	1.0	1.0	1.0	1.0	1.0	1.0	1.0	1.0	1.0
	W	5.0	*	INFANT	4.4	8.2	3.0	3.0	3.1	3.0	5.4	3.0	3.0	3.0	3.0
	W	5.0	5.0E-04	CHILD	2.4	2.7	1.8	1.8	1.7	1.8	2.7	1.8	1.8	1.8	1.8
	W	5.0	5.0E-04	TEEN	1.1	1.3	1.0	1.0	0.98	1.0	1.1	1.0	1.0	1.0	1.0
	W	5.0	2.0E-04	ADULT	1.0	1.0	1.0	1.0	1.0	1.0	1.0	1.0	1.0	1.0	1.0
	Y	0.3	*	INFANT	2.6	2.6	1.9	1.9	2.1	1.9	3.1	1.9	1.9	1.9	1.9
	Y	0.3	5.0E-04	CHILD	1.7	1.6	1.4	1.4	1.4	1.4	1.9	1.4	1.4	1.4	1.4
	Y	0.3	5.0E-04	TEEN	1.1	1.1	1.0	1.0	1.0	1.0	1.1	1.0	1.0	1.0	1.0
	Y	0.3	2.0E-04	ADULT	1.0	1.0	1.0	1.0	1.0	1.0	1.0	1.0	1.0	1.0	1.0
	Y	1.0	*	INFANT	2.8	2.6	2.0	2.0	2.3	2.0	3.3	2.0	2.0	2.0	2.0
	Y	1.0	5.0E-04	CHILD	1.7	1.6	1.4	1.4	1.5	1.4	1.9	1.4	1.4	1.4	1.4
	Y	1.0	5.0E-04	TEEN	1.1	1.1	1.0	1.0	1.0	1.0	1.1	1.0	1.0	1.0	1.0
	Y	1.0	2.0E-04	ADULT	1.0	1.0	1.0	1.0	1.0	1.0	1.0	1.0	1.0	1.0	1.0
	Y	5.0	*	INFANT	3.8	2.6	2.6	2.6	3.0	2.6	4.6	2.6	2.6	2.6	2.6
	Y	5.0	5.0E-04	CHILD	1.9	1.6	1.5	1.5	1.5	1.5	2.1	1.5	1.5	1.5	1.5
	Y	5.0	5.0E-04	TEEN	1.1	1.1	1.0	1.0	1.0	1.0	1.1	1.0	1.0	1.0	1.0
	Y	5.0	2.0E-04	ADULT	1.0	1.0	1.0	1.0	1.0	1.0	1.0	1.0	1.0	1.0	1.0

* F1 CHANGES FROM BIRTH TO AGE 1 YEAR

Table IV-5. (Continued). Inhalation case. NRC age groups.

FIFTY-YEAR COMMITTED DOSE EQUIVALENT (NORMALIZED TO ADULT VALUE) FROM RADIONUCLIDE INHALATION

NUCLIDE	INTAKE MODE	AMAD	F1	AGE	EFFEC-TIVE	ADRENALS	BLADDER WALL	BRAIN	BONE SURFACE	BREAST	STOMACH WALL	SI WALL	ULI WALL	LLI WALL	KIDNEYS
U-234	D	0.3	*	INFANT	22.	12.	12.	12.	35.	12.	12.	12.	12.	12.	11.
	D	0.3	7.0E-02	CHILD	2.9	3.4	3.4	3.4	3.1	3.4	3.4	3.4	3.4	3.4	2.8
	D	0.3	9.0E-02	TEEN	1.8	1.3	1.3	1.3	2.4	1.3	1.3	1.3	1.3	1.3	1.4
	D	0.3	5.0E-02	ADULT	1.0	1.0	1.0	1.0	1.0	1.0	1.0	1.0	1.0	1.0	1.0
	D	1.0	*	INFANT	22.	12.	12.	12.	36.	12.	12.	12.	12.	12.	11.
	D	1.0	7.0E-02	CHILD	2.9	3.5	3.5	3.5	3.1	3.5	3.5	3.5	3.5	3.5	2.8
	D	1.0	9.0E-02	TEEN	1.8	1.3	1.3	1.3	2.4	1.3	1.3	1.3	1.3	1.3	1.4
	D	1.0	5.0E-02	ADULT	1.0	1.0	1.0	1.0	1.0	1.0	1.0	1.0	1.0	1.0	1.0
	D	5.0	*	INFANT	23.	13.	13.	13.	37.	13.	13.	13.	13.	13.	12.
	D	5.0	7.0E-02	CHILD	2.9	3.5	3.5	3.5	3.1	3.5	3.5	3.5	3.5	3.5	2.8
	D	5.0	9.0E-02	TEEN	1.8	1.3	1.3	1.3	2.4	1.3	1.3	1.3	1.3	1.3	1.4
	D	5.0	5.0E-02	ADULT	1.0	1.0	1.0	1.0	1.0	1.0	1.0	1.0	1.0	1.0	1.0
	W	0.3	*	INFANT	12.	14.	14.	14.	39.	14.	14.	14.	14.	13.	13.
	W	0.3	7.0E-02	CHILD	3.4	3.6	3.6	3.6	3.2	3.6	3.6	3.6	3.6	3.6	2.9
	W	0.3	9.0E-02	TEEN	1.5	1.4	1.4	1.4	2.6	1.4	1.4	1.4	1.4	1.4	1.5
	W	0.3	5.0E-02	ADULT	1.0	1.0	1.0	1.0	1.0	1.0	1.0	1.0	1.0	1.0	1.0
	W	1.0	*	INFANT	14.	15.	15.	15.	43.	15.	15.	15.	15.	14.	14.
	W	1.0	7.0E-02	CHILD	3.4	3.6	3.6	3.6	3.3	3.6	3.6	3.6	3.7	3.6	2.9
	W	1.0	9.0E-02	TEEN	1.6	1.5	1.5	1.5	2.7	1.5	1.5	1.5	1.4	1.4	1.6
	W	1.0	5.0E-02	ADULT	1.0	1.0	1.0	1.0	1.0	1.0	1.0	1.0	1.0	1.0	1.0
	W	5.0	*	INFANT	17.	17.	17.	17.	49.	17.	17.	17.	16.	15.	16.
	W	5.0	7.0E-02	CHILD	3.3	3.7	3.7	3.7	3.3	3.7	3.7	3.7	3.7	3.7	3.0
	W	5.0	9.0E-02	TEEN	1.7	1.5	1.5	1.5	2.8	1.5	1.5	1.5	1.5	1.4	1.6
	W	5.0	5.0E-02	ADULT	1.0	1.0	1.0	1.0	1.0	1.0	1.0	1.0	1.0	1.0	1.0
	Y	0.3	*	INFANT	4.8	4.9	4.9	4.9	8.1	4.9	5.1	5.3	6.7	8.3	4.1
	Y	0.3	2.8E-03	CHILD	2.3	2.4	2.4	2.4	2.6	2.4	2.4	2.4	2.7	3.0	2.1
	Y	0.3	3.6E-03	TEEN	1.2	1.1	1.1	1.1	1.5	1.1	1.1	1.1	1.1	1.2	1.1
	Y	0.3	2.0E-03	ADULT	1.0	1.0	1.0	1.0	1.0	1.0	1.0	1.0	1.0	1.0	1.0
	Y	1.0	*	INFANT	4.8	5.6	5.6	5.6	11.	5.6	6.0	6.3	8.5	10.	4.8
	Y	1.0	2.8E-03	CHILD	2.3	2.4	2.4	2.4	2.6	2.4	2.5	2.6	3.0	3.2	2.1
	Y	1.0	3.6E-03	TEEN	1.2	1.1	1.1	1.1	1.6	1.1	1.1	1.1	1.2	1.2	1.2
	Y	1.0	2.0E-03	ADULT	1.0	1.0	1.0	1.0	1.0	1.0	1.0	1.0	1.0	1.0	1.0
	Y	5.0	*	INFANT	4.8	8.8	8.8	8.8	22.	8.8	9.5	9.9	12.	12.	7.9
	Y	5.0	2.8E-03	CHILD	2.3	2.8	2.8	2.8	2.8	2.8	2.9	3.1	3.5	3.5	2.4
	Y	5.0	3.6E-03	TEEN	1.2	1.2	1.2	1.2	1.9	1.2	1.3	1.2	1.3	1.2	1.3
	Y	5.0	2.0E-03	ADULT	1.0	1.0	1.0	1.0	1.0	1.0	1.0	1.0	1.0	1.0	1.0

* F1 CHANGES FROM BIRTH TO AGE 1 YEAR

Table IV-5. (Continued). Inhalation case. NRC age groups.

FIFTY-YEAR COMMITTED DOSE EQUIVALENT (NORMALIZED TO ADULT VALUE) FROM RADIONUCLIDE INHALATION

NUCLIDE	INTAKE MODE	AMAD	F1	AGE	LIVER	LUNGS	OVARIES	PANCREAS	ACTIVE MARROW	SKIN	SPLEEN	TESTES	THYMUS	THYROID	UTERUS
U-234	D	0.3	*	INFANT	11.	13.	12.	12.	14.	12.	15.	12.	12.	12.	12.
	D	0.3	7.0E-02	CHILD	3.1	3.4	3.4	3.4	1.8	3.4	3.6	3.4	3.4	3.4	3.4
	D	0.3	9.0E-02	TEEN	1.4	1.5	1.3	1.3	1.1	1.3	1.7	1.3	1.3	1.3	1.3
	D	0.3	5.0E-02	ADULT	1.0	1.0	1.0	1.0	1.0	1.0	1.0	1.0	1.0	1.0	1.0
	D	1.0	*	INFANT	12.	13.	12.	12.	14.	12.	15.	12.	12.	12.	12.
	D	1.0	7.0E-02	CHILD	3.2	3.5	3.5	3.5	1.8	3.5	3.6	3.5	3.5	3.5	3.5
	D	1.0	9.0E-02	TEEN	1.4	1.5	1.3	1.3	1.2	1.3	1.8	1.3	1.3	1.3	1.3
	D	1.0	5.0E-02	ADULT	1.0	1.0	1.0	1.0	1.0	1.0	1.0	1.0	1.0	1.0	1.0
	D	5.0	*	INFANT	12.	13.	13.	13.	15.	13.	16.	13.	13.	13.	13.
	D	5.0	7.0E-02	CHILD	3.2	3.5	3.5	3.5	1.8	3.5	3.6	3.5	3.5	3.5	3.5
	D	5.0	9.0E-02	TEEN	1.4	1.4	1.3	1.3	1.2	1.3	1.8	1.3	1.3	1.3	1.3
	D	5.0	5.0E-02	ADULT	1.0	1.0	1.0	1.0	1.0	1.0	1.0	1.0	1.0	1.0	1.0
	W	0.3	*	INFANT	13.	12.	14.	14.	16.	14.	17.	14.	14.	14.	14.
	W	0.3	7.0E-02	CHILD	3.3	3.4	3.6	3.6	1.8	3.6	3.8	3.6	3.6	3.6	3.6
	W	0.3	9.0E-02	TEEN	1.5	1.5	1.4	1.4	1.3	1.4	1.9	1.4	1.4	1.4	1.4
	W	0.3	5.0E-02	ADULT	1.0	1.0	1.0	1.0	1.0	1.0	1.0	1.0	1.0	1.0	1.0
	W	1.0	*	INFANT	14.	12.	15.	15.	17.	15.	18.	15.	15.	15.	15.
	W	1.0	7.0E-02	CHILD	3.3	3.4	3.6	3.6	1.9	3.6	3.8	3.6	3.6	3.6	3.6
	W	1.0	9.0E-02	TEEN	1.6	1.5	1.5	1.5	1.3	1.5	2.0	1.5	1.5	1.5	1.5
	W	1.0	5.0E-02	ADULT	1.0	1.0	1.0	1.0	1.0	1.0	1.0	1.0	1.0	1.0	1.0
	W	5.0	*	INFANT	16.	12.	17.	17.	20.	17.	21.	17.	17.	17.	17.
	W	5.0	7.0E-02	CHILD	3.4	3.4	3.7	3.7	1.9	3.7	3.9	3.7	3.7	3.7	3.7
	W	5.0	9.0E-02	TEEN	1.6	1.5	1.5	1.5	1.4	1.5	2.0	1.5	1.5	1.5	1.5
	W	5.0	5.0E-02	ADULT	1.0	1.0	1.0	1.0	1.0	1.0	1.0	1.0	1.0	1.0	1.0
	Y	0.3	*	INFANT	4.6	4.8	4.9	4.9	3.7	4.9	5.3	4.9	4.9	4.9	4.9
	Y	0.3	2.8E-03	CHILD	2.3	2.3	2.4	2.4	1.5	2.4	2.6	2.4	2.4	2.4	2.4
	Y	0.3	3.6E-03	TEEN	1.1	1.2	1.1	1.1	1.1	1.1	1.3	1.1	1.1	1.1	1.1
	Y	0.3	2.0E-03	ADULT	1.0	1.0	1.0	1.0	1.0	1.0	1.0	1.0	1.0	1.0	1.0
	Y	1.0	*	INFANT	5.3	4.8	5.6	5.6	4.7	5.6	6.3	5.6	5.6	5.6	5.6
	Y	1.0	2.8E-03	CHILD	2.4	2.3	2.4	2.4	1.5	2.4	2.7	2.4	2.4	2.4	2.4
	Y	1.0	3.6E-03	TEEN	1.2	1.2	1.1	1.1	1.1	1.1	1.3	1.1	1.1	1.1	1.1
	Y	1.0	2.0E-03	ADULT	1.0	1.0	1.0	1.0	1.0	1.0	1.0	1.0	1.0	1.0	1.0
	Y	5.0	*	INFANT	8.3	4.8	8.8	8.8	9.0	8.8	10.	8.8	8.8	8.8	8.8
	Y	5.0	2.8E-03	CHILD	2.7	2.3	2.8	2.8	1.6	2.8	3.1	2.8	2.8	2.8	2.8
	Y	5.0	3.6E-03	TEEN	1.3	1.2	1.2	1.2	1.2	1.2	1.5	1.2	1.2	1.2	1.2
	Y	5.0	2.0E-03	ADULT	1.0	1.0	1.0	1.0	1.0	1.0	1.0	1.0	1.0	1.0	1.0

* F1 CHANGES FROM BIRTH TO AGE 1 YEAR

Table IV-5. (Continued). Inhalation case. NRC age groups.

FIFTY-YEAR COMMITTED DOSE EQUIVALENT (NORMALIZED TO ADULT VALUE) FROM RADIONUCLIDE INHALATION

NUCLIDE	INTAKE MODE	AMAD	F1	AGE	EFFEC-TIVE	ADRENALS	BLADDER WALL	BRAIN	BONE SURFACE	BREAST	STOMACH WALL	SI WALL	ULI WALL	LLI WALL	KIDNEYS
U-235	D	0.3	*	INFANT	22.	12.	12.	12.	35.	12.	12.	12.	12.	12.	11.
	D	0.3	7.0E-02	CHILD	2.9	3.4	3.4	3.4	3.1	3.4	3.4	3.4	3.4	3.4	2.8
	D	0.3	9.0E-02	TEEN	1.8	1.3	1.3	1.3	2.4	1.3	1.3	1.3	1.3	1.3	1.4
	D	0.3	5.0E-02	ADULT	1.0	1.0	1.0	1.0	1.0	1.0	1.0	1.0	1.0	1.0	1.0
	D	1.0	*	INFANT	22.	12.	12.	12.	36.	12.	12.	12.	12.	12.	11.
	D	1.0	7.0E-02	CHILD	2.9	3.4	3.4	3.4	3.1	3.4	3.4	3.4	3.4	3.4	2.8
	D	1.0	9.0E-02	TEEN	1.8	1.3	1.3	1.3	2.4	1.3	1.3	1.3	1.3	1.3	1.4
	D	1.0	5.0E-02	ADULT	1.0	1.0	1.0	1.0	1.0	1.0	1.0	1.0	1.0	1.0	1.0
	D	5.0	*	INFANT	23.	13.	13.	13.	37.	13.	13.	13.	13.	13.	12.
	D	5.0	7.0E-02	CHILD	2.9	3.5	3.5	3.5	3.1	3.5	3.5	3.5	3.5	3.5	2.8
	D	5.0	9.0E-02	TEEN	1.8	1.3	1.3	1.3	2.4	1.3	1.3	1.3	1.3	1.3	1.4
	D	5.0	5.0E-02	ADULT	1.0	1.0	1.0	1.0	1.0	1.0	1.0	1.0	1.0	1.0	1.0
	W	0.3	*	INFANT	12.	14.	14.	14.	39.	14.	14.	14.	14.	13.	13.
	W	0.3	7.0E-02	CHILD	3.4	3.6	3.6	3.6	3.2	3.6	3.6	3.6	3.6	3.6	2.9
	W	0.3	9.0E-02	TEEN	1.5	1.4	1.4	1.5	2.6	1.5	1.4	1.4	1.4	1.3	1.5
	W	0.3	5.0E-02	ADULT	1.0	1.0	1.0	1.0	1.0	1.0	1.0	1.0	1.0	1.0	1.0
	W	1.0	*	INFANT	14.	15.	15.	15.	43.	15.	15.	15.	15.	14.	14.
	W	1.0	7.0E-02	CHILD	3.4	3.6	3.6	3.6	3.3	3.6	3.6	3.6	3.7	3.6	2.9
	W	1.0	9.0E-02	TEEN	1.6	1.5	1.5	1.5	2.7	1.5	1.5	1.5	1.4	1.4	1.6
	W	1.0	5.0E-02	ADULT	1.0	1.0	1.0	1.0	1.0	1.0	1.0	1.0	1.0	1.0	1.0
	W	5.0	*	INFANT	17.	17.	17.	17.	49.	17.	17.	17.	16.	14.	16.
	W	5.0	7.0E-02	CHILD	3.3	3.7	3.7	3.7	3.3	3.7	3.7	3.7	3.7	3.7	3.0
	W	5.0	9.0E-02	TEEN	1.7	1.5	1.5	1.5	2.8	1.5	1.5	1.5	1.5	1.4	1.6
	W	5.0	5.0E-02	ADULT	1.0	1.0	1.0	1.0	1.0	1.0	1.0	1.0	1.0	1.0	1.0
	Y	0.3	*	INFANT	4.8	4.8	4.9	4.9	8.1	5.2	4.6	5.4	6.9	8.5	4.1
	Y	0.3	2.8E-03	CHILD	2.3	2.4	2.4	2.3	2.5	2.7	2.3	2.5	2.8	3.0	2.1
	Y	0.3	3.6E-03	TEEN	1.2	1.1	1.1	1.1	1.5	1.2	1.1	1.1	1.2	1.2	1.1
	Y	0.3	2.0E-03	ADULT	1.0	1.0	1.0	1.0	1.0	1.0	1.0	1.0	1.0	1.0	1.0
	Y	1.0	*	INFANT	4.8	5.3	5.6	5.6	11.	5.8	5.4	6.4	8.6	10.	4.8
	Y	1.0	2.8E-03	CHILD	2.3	2.5	2.4	2.4	2.6	2.7	2.3	2.6	3.0	3.2	2.1
	Y	1.0	3.6E-03	TEEN	1.2	1.2	1.1	1.1	1.6	1.2	1.1	1.2	1.2	1.2	1.2
	Y	1.0	2.0E-03	ADULT	1.0	1.0	1.0	1.0	1.0	1.0	1.0	1.0	1.0	1.0	1.0
	Y	5.0	*	INFANT	4.8	7.9	8.7	8.7	22.	8.4	8.6	9.9	12.	12.	7.8
	Y	5.0	2.8E-03	CHILD	2.3	2.8	2.8	2.8	2.8	3.0	2.7	3.1	3.5	3.5	2.4
	Y	5.0	3.6E-03	TEEN	1.2	1.2	1.2	1.2	1.9	1.3	1.2	1.2	1.3	1.2	1.3
	Y	5.0	2.0E-03	ADULT	1.0	1.0	1.0	1.0	1.0	1.0	1.0	1.0	1.0	1.0	1.0

* F1 CHANGES FROM BIRTH TO AGE 1 YEAR

Table IV-5. (Continued). Inhalation case. NRC age groups.

FIFTY-YEAR COMMITTED DOSE EQUIVALENT (NORMALIZED TO ADULT VALUE) FROM RADIONUCLIDE INHALATION

NUCLIDE	INTAKE MODE	AMAD	F1	AGE	LIVER	LUNGS	OVARIES	PANCREAS	ACTIVE MARROW	SKIN	SPLEEN	TESTES	THYMUS	THYROID	UTERUS
U-235	D	0.3	*	INFANT	11.	13.	12.	12.	14.	12.	15.	12.	12.	12.	12.
	D	0.3	7.0E-02	CHILD	3.1	3.5	3.4	3.4	1.7	3.4	3.6	3.4	3.4	3.4	3.4
	D	0.3	9.0E-02	TEEN	1.4	1.5	1.3	1.3	1.1	1.3	1.7	1.3	1.3	1.3	1.3
	D	0.3	5.0E-02	ADULT	1.0	1.0	1.0	1.0	1.0	1.0	1.0	1.0	1.0	1.0	1.0
	D	1.0	*	INFANT	12.	13.	12.	12.	14.	12.	15.	12.	12.	12.	12.
	D	1.0	7.0E-02	CHILD	3.1	3.5	3.4	3.4	1.8	3.4	3.6	3.4	3.4	3.4	3.4
	D	1.0	9.0E-02	TEEN	1.4	1.5	1.3	1.3	1.2	1.3	1.8	1.3	1.3	1.3	1.3
	D	1.0	5.0E-02	ADULT	1.0	1.0	1.0	1.0	1.0	1.0	1.0	1.0	1.0	1.0	1.0
	D	5.0	*	INFANT	12.	13.	13.	13.	15.	13.	16.	13.	13.	13.	13.
	D	5.0	7.0E-02	CHILD	3.2	3.5	3.5	3.5	1.8	3.5	3.6	3.5	3.5	3.5	3.5
	D	5.0	9.0E-02	TEEN	1.4	1.4	1.3	1.3	1.2	1.3	1.8	1.3	1.3	1.3	1.3
	D	5.0	5.0E-02	ADULT	1.0	1.0	1.0	1.0	1.0	1.0	1.0	1.0	1.0	1.0	1.0
	W	0.3	*	INFANT	13.	12.	14.	14.	16.	14.	17.	14.	14.	14.	14.
	W	0.3	7.0E-02	CHILD	3.3	3.4	3.6	3.6	1.8	3.6	3.8	3.6	3.5	3.6	3.6
	W	0.3	9.0E-02	TEEN	1.5	1.5	1.4	1.4	1.3	1.4	1.9	1.4	1.4	1.4	1.4
	W	0.3	5.0E-02	ADULT	1.0	1.0	1.0	1.0	1.0	1.0	1.0	1.0	1.0	1.0	1.0
	W	1.0	*	INFANT	14.	12.	15.	15.	17.	15.	18.	15.	15.	15.	15.
	W	1.0	7.0E-02	CHILD	3.3	3.4	3.6	3.6	1.9	3.6	3.8	3.6	3.6	3.6	3.6
	W	1.0	9.0E-02	TEEN	1.6	1.5	1.5	1.5	1.3	1.5	2.0	1.5	1.5	1.5	1.5
	W	1.0	5.0E-02	ADULT	1.0	1.0	1.0	1.0	1.0	1.0	1.0	1.0	1.0	1.0	1.0
	W	5.0	*	INFANT	16.	12.	17.	17.	20.	17.	21.	17.	17.	17.	17.
	W	5.0	7.0E-02	CHILD	3.4	3.4	3.7	3.7	1.9	3.7	3.9	3.7	3.7	3.7	3.7
	W	5.0	9.0E-02	TEEN	1.6	1.5	1.5	1.5	1.3	1.5	2.0	1.5	1.5	1.5	1.5
	W	5.0	5.0E-02	ADULT	1.0	1.0	1.0	1.0	1.0	1.0	1.0	1.0	1.0	1.0	1.0
	Y	0.3	*	INFANT	4.1	4.8	4.9	4.5	3.7	4.7	5.0	4.9	3.9	5.0	4.9
	Y	0.3	2.8E-03	CHILD	2.2	2.3	2.4	2.2	1.5	2.3	2.5	2.4	2.1	2.4	2.4
	Y	0.3	3.6E-03	TEEN	1.2	1.2	1.1	1.1	1.1	1.1	1.2	1.1	1.1	1.1	1.1
	Y	0.3	2.0E-03	ADULT	1.0	1.0	1.0	1.0	1.0	1.0	1.0	1.0	1.0	1.0	1.0
	Y	1.0	*	INFANT	4.5	4.8	5.6	5.0	4.6	5.3	5.8	5.6	4.4	5.6	5.6
	Y	1.0	2.8E-03	CHILD	2.2	2.3	2.4	2.3	1.5	2.4	2.6	2.4	2.1	2.5	2.4
	Y	1.0	3.6E-03	TEEN	1.2	1.2	1.1	1.1	1.1	1.1	1.3	1.1	1.1	1.2	1.1
	Y	1.0	2.0E-03	ADULT	1.0	1.0	1.0	1.0	1.0	1.0	1.0	1.0	1.0	1.0	1.0
	Y	5.0	*	INFANT	6.7	4.8	8.7	7.7	8.8	8.2	9.6	8.8	6.9	8.5	8.7
	Y	5.0	2.8E-03	CHILD	2.5	2.3	2.8	2.6	1.6	2.8	2.9	2.8	2.5	2.8	2.8
	Y	5.0	3.6E-03	TEEN	1.3	1.2	1.2	1.2	1.2	1.2	1.5	1.2	1.2	1.2	1.2
	Y	5.0	2.0E-03	ADULT	1.0	1.0	1.0	1.0	1.0	1.0	1.0	1.0	1.0	1.0	1.0

* F1 CHANGES FROM BIRTH TO AGE 1 YEAR

Table IV-5. (Continued). Inhalation case. NRC age groups.

FIFTY-YEAR COMMITTED DOSE EQUIVALENT (NORMALIZED TO ADULT VALUE) FROM RADIONUCLIDE INHALATION

NUCLIDE	INTAKE MODE	AMAD	F1	AGE	EFFEC-TIVE	ADRENALS	BLADDER WALL	BRAIN	BONE SURFACE	BREAST	STOMACH WALL	SI WALL	ULI WALL	LLI WALL	KIDNEYS
U-238	D	0.3	*	INFANT	21.	12.	12.	12.	35.	12.	12.	12.	12.	12.	11.
	D	0.3	7.0E-02	CHILD	2.9	3.4	3.4	3.4	3.1	3.4	3.4	3.4	3.4	3.4	2.8
	D	0.3	9.0E-02	TEEN	1.8	1.3	1.3	1.3	2.4	1.3	1.3	1.3	1.3	1.3	1.4
	D	0.3	5.0E-02	ADULT	1.0	1.0	1.0	1.0	1.0	1.0	1.0	1.0	1.0	1.0	1.0
	D	1.0	*	INFANT	22.	12.	12.	12.	35.	12.	12.	12.	12.	12.	11.
	D	1.0	7.0E-02	CHILD	2.9	3.4	3.4	3.4	3.1	3.4	3.4	3.4	3.4	3.4	2.8
	D	1.0	9.0E-02	TEEN	1.8	1.3	1.3	1.3	2.4	1.3	1.3	1.3	1.3	1.3	1.4
	D	1.0	5.0E-02	ADULT	1.0	1.0	1.0	1.0	1.0	1.0	1.0	1.0	1.0	1.0	1.0
	D	5.0	*	INFANT	23.	13.	13.	13.	37.	13.	13.	13.	13.	13.	12.
	D	5.0	7.0E-02	CHILD	2.9	3.5	3.5	3.5	3.1	3.5	3.5	3.5	3.5	3.5	2.8
	D	5.0	9.0E-02	TEEN	1.8	1.3	1.3	1.3	2.4	1.3	1.3	1.3	1.3	1.3	1.4
	D	5.0	5.0E-02	ADULT	1.0	1.0	1.0	1.0	1.0	1.0	1.0	1.0	1.0	1.0	1.0
	W	0.3	*	INFANT	12.	14.	14.	14.	38.	14.	14.	14.	14.	13.	13.
	W	0.3	7.0E-02	CHILD	3.3	3.6	3.6	3.6	3.2	3.6	3.6	3.6	3.6	3.6	2.9
	W	0.3	9.0E-02	TEEN	1.5	1.4	1.4	1.4	2.6	1.4	1.4	1.4	1.4	1.3	1.5
	W	0.3	5.0E-02	ADULT	1.0	1.0	1.0	1.0	1.0	1.0	1.0	1.0	1.0	1.0	1.0
	W	1.0	*	INFANT	14.	15.	15.	15.	42.	15.	15.	15.	14.	14.	14.
	W	1.0	7.0E-02	CHILD	3.3	3.6	3.6	3.6	3.2	3.6	3.6	3.6	3.7	3.6	2.9
	W	1.0	9.0E-02	TEEN	1.6	1.5	1.5	1.5	2.7	1.5	1.5	1.5	1.4	1.4	1.5
	W	1.0	5.0E-02	ADULT	1.0	1.0	1.0	1.0	1.0	1.0	1.0	1.0	1.0	1.0	1.0
	W	5.0	*	INFANT	17.	17.	17.	17.	49.	17.	17.	17.	16.	15.	15.
	W	5.0	7.0E-02	CHILD	3.3	3.7	3.7	3.7	3.3	3.7	3.7	3.7	3.7	3.7	3.0
	W	5.0	9.0E-02	TEEN	1.7	1.5	1.5	1.5	2.8	1.5	1.5	1.5	1.5	1.4	1.6
	W	5.0	5.0E-02	ADULT	1.0	1.0	1.0	1.0	1.0	1.0	1.0	1.0	1.0	1.0	1.0
	Y	0.3	*	INFANT	4.8	4.8	4.9	4.9	8.0	4.8	4.9	5.3	6.8	8.1	4.1
	Y	0.3	2.8E-03	CHILD	2.3	2.3	2.3	2.3	2.5	2.4	2.3	2.4	2.7	3.0	2.1
	Y	0.3	3.6E-03	TEEN	1.2	1.1	1.1	1.1	1.5	1.1	1.1	1.1	1.1	1.2	1.1
	Y	0.3	2.0E-03	ADULT	1.0	1.0	1.0	1.0	1.0	1.0	1.0	1.0	1.0	1.0	1.0
	Y	1.0	*	INFANT	4.8	5.4	5.6	5.6	11.	5.5	5.7	6.3	8.4	9.8	4.8
	Y	1.0	2.8E-03	CHILD	2.3	2.4	2.4	2.4	2.6	2.4	2.4	2.6	3.0	3.2	2.1
	Y	1.0	3.6E-03	TEEN	1.2	1.1	1.1	1.1	1.6	1.1	1.1	1.1	1.2	1.2	1.2
	Y	1.0	2.0E-03	ADULT	1.0	1.0	1.0	1.0	1.0	1.0	1.0	1.0	1.0	1.0	1.0
	Y	5.0	*	INFANT	4.8	8.5	8.7	8.7	22.	8.6	9.2	9.8	12.	12.	7.8
	Y	5.0	2.8E-03	CHILD	2.3	2.8	2.8	2.8	2.8	2.8	2.8	3.0	3.5	3.5	2.4
	Y	5.0	3.6E-03	TEEN	1.2	1.2	1.2	1.2	1.9	1.2	1.2	1.2	1.3	1.2	1.3
	Y	5.0	2.0E-03	ADULT	1.0	1.0	1.0	1.0	1.0	1.0	1.0	1.0	1.0	1.0	1.0

* F1 CHANGES FROM BIRTH TO AGE 1 YEAR

Table IV-5. (Continued). Inhalation case. NRC age groups.

FIFTY-YEAR COMMITTED DOSE EQUIVALENT (NORMALIZED TO ADULT VALUE) FROM RADIONUCLIDE INHALATION

NUCLIDE	INTAKE MODE	AMAD	F1	AGE	LIVER	LUNGS	OVARIES	PANCREAS	ACTIVE MARROW	SKIN	SPLEEN	TESTES	THYMUS	THYROID	UTERUS
U-238	D	0.3	*	INFANT	11.	13.	12.	12.	14.	12.	15.	12.	12.	12.	12.
	D	0.3	7.0E-02	CHILD	3.1	3.4	3.4	3.4	1.7	3.4	3.6	3.4	3.4	3.4	3.4
	D	0.3	9.0E-02	TEEN	1.4	1.5	1.3	1.3	1.1	1.3	1.7	1.3	1.3	1.3	1.3
	D	0.3	5.0E-02	ADULT	1.0	1.0	1.0	1.0	1.0	1.0	1.0	1.0	1.0	1.0	1.0
	D	1.0	*	INFANT	12.	13.	12.	12.	14.	12.	15.	12.	12.	12.	12.
	D	1.0	7.0E-02	CHILD	3.1	3.4	3.4	3.4	1.7	3.4	3.6	3.4	3.4	3.4	3.4
	D	1.0	9.0E-02	TEEN	1.4	1.5	1.3	1.3	1.1	1.3	1.8	1.3	1.3	1.3	1.3
	D	1.0	5.0E-02	ADULT	1.0	1.0	1.0	1.0	1.0	1.0	1.0	1.0	1.0	1.0	1.0
	D	5.0	*	INFANT	12.	13.	13.	13.	14.	13.	16.	13.	13.	13.	13.
	D	5.0	7.0E-02	CHILD	3.2	3.4	3.5	3.5	1.7	3.5	3.6	3.5	3.5	3.5	3.5
	D	5.0	9.0E-02	TEEN	1.4	1.4	1.3	1.3	1.2	1.3	1.8	1.3	1.3	1.3	1.3
	D	5.0	5.0E-02	ADULT	1.0	1.0	1.0	1.0	1.0	1.0	1.0	1.0	1.0	1.0	1.0
	W	0.3	*	INFANT	13.	12.	14.	14.	15.	14.	17.	14.	14.	14.	14.
	W	0.3	7.0E-02	CHILD	3.2	3.4	3.6	3.6	1.8	3.6	3.8	3.6	3.6	3.6	3.6
	W	0.3	9.0E-02	TEEN	1.5	1.5	1.4	1.4	1.3	1.4	1.9	1.4	1.4	1.4	1.4
	W	0.3	5.0E-02	ADULT	1.0	1.0	1.0	1.0	1.0	1.0	1.0	1.0	1.0	1.0	1.0
	W	1.0	*	INFANT	14.	12.	15.	15.	17.	15.	18.	15.	15.	15.	15.
	W	1.0	7.0E-02	CHILD	3.3	3.4	3.6	3.6	1.9	3.6	3.8	3.6	3.6	3.6	3.6
	W	1.0	9.0E-02	TEEN	1.6	1.5	1.5	1.5	1.3	1.5	1.9	1.5	1.5	1.5	1.5
	W	1.0	5.0E-02	ADULT	1.0	1.0	1.0	1.0	1.0	1.0	1.0	1.0	1.0	1.0	1.0
	W	5.0	*	INFANT	16.	12.	17.	17.	19.	17.	21.	17.	17.	17.	17.
	W	5.0	7.0E-02	CHILD	3.4	3.4	3.7	3.7	1.9	3.7	3.9	3.7	3.7	3.7	3.7
	W	5.0	9.0E-02	TEEN	1.6	1.5	1.5	1.5	1.3	1.5	2.0	1.5	1.5	1.5	1.5
	W	5.0	5.0E-02	ADULT	1.0	1.0	1.0	1.0	1.0	1.0	1.0	1.0	1.0	1.0	1.0
	Y	0.3	*	INFANT	4.4	4.7	4.9	4.7	3.7	4.8	5.2	4.9	4.5	4.8	4.9
	Y	0.3	2.8E-03	CHILD	2.2	2.3	2.3	2.3	1.5	2.3	2.6	2.3	2.2	2.3	2.3
	Y	0.3	3.6E-03	TEEN	1.1	1.2	1.1	1.1	1.1	1.1	1.2	1.1	1.1	1.1	1.1
	Y	0.3	2.0E-03	ADULT	1.0	1.0	1.0	1.0	1.0	1.0	1.0	1.0	1.0	1.0	1.0
	Y	1.0	*	INFANT	5.0	4.7	5.6	5.4	4.6	5.5	6.1	5.6	5.2	5.5	5.6
	Y	1.0	2.8E-03	CHILD	2.3	2.3	2.4	2.4	1.5	2.4	2.7	2.4	2.3	2.4	2.4
	Y	1.0	3.6E-03	TEEN	1.2	1.2	1.1	1.1	1.1	1.1	1.3	1.1	1.1	1.1	1.1
	Y	1.0	2.0E-03	ADULT	1.0	1.0	1.0	1.0	1.0	1.0	1.0	1.0	1.0	1.0	1.0
	Y	5.0	*	INFANT	7.7	4.8	8.7	8.5	8.7	8.6	10.	8.7	8.2	8.6	8.7
	Y	5.0	2.8E-03	CHILD	2.6	2.3	2.8	2.8	1.6	2.8	3.0	2.8	2.7	2.8	2.8
	Y	5.0	3.6E-03	TEEN	1.3	1.2	1.2	1.2	1.1	1.2	1.5	1.2	1.2	1.2	1.2
	Y	5.0	2.0E-03	ADULT	1.0	1.0	1.0	1.0	1.0	1.0	1.0	1.0	1.0	1.0	1.0

* F1 CHANGES FROM BIRTH TO AGE 1 YEAR

Table IV-6. Inhalation case. NRC age groups. Dose to bone.[1] Fifty-year committed dose equivalent (normalized to adult value).

Nuclide	Intake mode	AMAD	Age	Bone	Nuclide	Intake mode	AMAD	Age	Bone
Pb-210	D	0.3	Infant	0.91	Ra-226	W	0.3	Infant	2.6
	D	0.3	Child	0.69		W	0.3	Child	0.85
	D	0.3	Teen	1.7		W	0.3	Teen	3.1
	D	0.3	Adult	1.0		W	0.3	Adult	1.0
	D	1.0	Infant	0.97		W	1.0	Infant	2.7
	D	1.0	Child	0.71		W	1.0	Child	0.85
	D	1.0	Teen	1.7		W	1.0	Teen	3.2
	D	1.0	Adult	1.0		W	1.0	Adult	1.0
	D	5.0	Infant	1.1		W	5.0	Infant	3.0
	D	5.0	Child	0.72		W	5.0	Child	0.87
	D	5.0	Teen	1.8		W	5.0	Teen	3.4
	D	5.0	Adult	1.0		W	5.0	Adult	1.0
Po-210	D	0.3	Infant	24.	Ra-228	W	0.3	Infant	2.2
	D	0.3	Child	3.4		W	0.3	Child	1.2
	D	0.3	Teen	2.1		W	0.3	Teen	2.4
	D	0.3	Adult	1.0		W	0.3	Adult	1.0
	D	1.0	Infant	25.		W	1.0	Infant	2.2
	D	1.0	Child	3.5		W	1.0	Child	1.2
	D	1.0	Teen	2.1		W	1.0	Teen	2.6
	D	1.0	Adult	1.0		W	1.0	Adult	1.0
	D	5.0	Infant	26.		W	5.0	Infant	2.2
	D	5.0	Child	3.5		W	5.0	Child	1.1
	D	5.0	Teen	2.2		W	5.0	Teen	2.9
	D	5.0	Adult	1.0		W	5.0	Adult	1.0
	W	0.3	Infant	33.	Th-228	W	0.3	Infant	7.2
	W	0.3	Child	3.8		W	0.3	Child	3.0
	W	0.3	Teen	2.4		W	0.3	Teen	1.4
	W	0.3	Adult	1.0		W	0.3	Adult	1.0
	W	1.0	Infant	36.		W	1.0	Infant	7.4
	W	1.0	Child	3.9		W	1.0	Child	3.0
	W	1.0	Teen	2.5		W	1.0	Teen	1.4
	W	1.0	Adult	1.0		W	1.0	Adult	1.0
	W	5.0	Infant	40.		W	5.0	Infant	7.6
	W	5.0	Child	4.0		W	5.0	Child	3.0
	W	5.0	Teen	2.7		W	5.0	Teen	1.4
	W	5.0	Adult	1.0		W	5.0	Adult	1.0

[1]Bone is defined here as the marrow-free skeleton, and doses to bone are defined as in NUREG/CR-150.

Table IV-6. (Continued). Inhalation case. NRC age groups. Bone.[1] Fifty-year committed dose equivalent (normalized to adult value).

Nuclide	Intake mode	AMAD	Age	Bone	Nuclide	Intake mode	AMAD	Age	Bone
Th-228	Y	0.3	Infant	5.5	Th-232	W	0.3	Infant	0.91
	Y	0.3	Child	2.6		W	0.3	Child	0.89
	Y	0.3	Teen	1.2		W	0.3	Teen	1.2
	Y	0.3	Adult	1.0		W	0.3	Adult	1.0
	Y	1.0	Infant	6.5		W	1.0	Infant	0.92
	Y	1.0	Child	2.6		W	1.0	Child	0.89
	Y	1.0	Teen	1.3		W	1.0	Teen	1.2
	Y	1.0	Adult	1.0		W	1.0	Adult	1.0
	Y	5.0	Infant	9.3		W	5.0	Infant	0.93
	Y	5.0	Child	2.9		W	5.0	Child	0.89
	Y	5.0	Teen	1.4		W	5.0	Teen	1.2
	Y	5.0	Adult	1.0		W	5.0	Adult	1.0
Th-230	W	0.3	Infant	1.2		Y	0.3	Infant	0.99
	W	0.3	Child	0.98		Y	0.3	Child	0.96
	W	0.3	Teen	1.0		Y	0.3	Teen	1.0
	W	0.3	Adult	1.0		Y	0.3	Adult	1.0
	W	1.0	Infant	1.2		Y	1.0	Infant	1.0
	W	1.0	Child	0.98		Y	1.0	Child	0.96
	W	1.0	Teen	1.0		Y	1.0	Teen	1.0
	W	1.0	Adult	1.0		Y	1.0	Adult	1.0
	W	5.0	Infant	1.2		Y	5.0	Infant	1.1
	W	5.0	Child	0.98		Y	5.0	Child	0.94
	W	5.0	Teen	1.0		Y	5.0	Teen	1.1
	W	5.0	Adult	1.0		Y	5.0	Adult	1.0
	Y	0.3	Infant	1.1					
	Y	0.3	Child	0.97					
	Y	0.3	Teen	1.0					
	Y	0.3	Adult	1.0					
	Y	1.0	Infant	1.1					
	Y	1.0	Child	0.97					
	Y	1.0	Teen	1.0					
	Y	1.0	Adult	1.0					
	Y	5.0	Infant	1.3					
	Y	5.0	Child	0.98					
	Y	5.0	Teen	1.0					
	Y	5.0	Adult	1.0					

[1]Bone is defined here as the marrow-free skeleton, and doses to bone are defined as in NUREG/CR-150.

Table IV-6. (Continued). Inhalation case. NRC age groups. Bone.[1] Fifty-year committed dose equivalent (normalized to adult value).

Nuclide	Intake mode	AMAD	Age	Bone	Nuclide	Intake mode	AMAD	Age	Bone
U-234	D	0.3	Infant	4.3	U-235	D	0.3	Infant	4.3
	D	0.3	Child	0.96		D	0.3	Child	0.96
	D	0.3	Teen	2.7		D	0.3	Teen	2.7
	D	0.3	Adult	1.0		D	0.3	Adult	1.0
	D	1.0	Infant	4.4		D	1.0	Infant	4.4
	D	1.0	Child	0.96		D	1.0	Child	0.96
	D	1.0	Teen	2.8		D	1.0	Teen	2.8
	D	1.0	Adult	1.0		D	1.0	Adult	1.0
	D	5.0	Infant	4.5		D	5.0	Infant	4.5
	D	5.0	Child	0.97		D	5.0	Child	0.97
	D	5.0	Teen	2.8		D	5.0	Teen	2.8
	D	5.0	Adult	1.0		D	5.0	Adult	1.0
	W	0.3	Infant	5.1		W	0.3	Infant	5.1
	W	0.3	Child	1.0		W	0.3	Child	1.0
	W	0.3	Teen	3.0		W	0.3	Teen	3.0
	W	0.3	Adult	1.0		W	0.3	Adult	1.0
	W	1.0	Infant	5.5		W	1.0	Infant	5.4
	W	1.0	Child	1.0		W	1.0	Child	1.0
	W	1.0	Teen	3.1		W	1.0	Teen	3.1
	W	1.0	Adult	1.0		W	1.0	Adult	1.0
	W	5.0	Infant	6.0		W	5.0	Infant	6.0
	W	5.0	Child	1.0		W	5.0	Child	1.0
	W	5.0	Teen	3.2		W	5.0	Teen	3.2
	W	5.0	Adult	1.0		W	5.0	Adult	1.0
	Y	0.3	Infant	1.9		Y	0.3	Infant	1.9
	Y	0.3	Child	1.4		Y	0.3	Child	1.4
	Y	0.3	Teen	1.7		Y	0.3	Teen	1.7
	Y	0.3	Adult	1.0		Y	0.3	Adult	1.0
	Y	1.0	Infant	2.1		Y	1.0	Infant	2.1
	Y	1.0	Child	1.4		Y	1.0	Child	1.4
	Y	1.0	Teen	1.8		Y	1.0	Teen	1.8
	Y	1.0	Adult	1.0		Y	1.0	Adult	1.0
	Y	5.0	Infant	3.2		Y	5.0	Infant	3.2
	Y	5.0	Child	1.2		Y	5.0	Child	1.2
	Y	5.0	Teen	2.2		Y	5.0	Teen	2.2
	Y	5.0	Adult	1.0		Y	5.0	Adult	1.0

[1]Bone is defined here as the marrow-free skeleton, and doses to bone are defined as in NUREG/CR-150.

Table IV-6. (Continued). Inhalation case. NRC age groups. Bone.[1] Fifty-year committed dose equivalent (normalized to adult value).

Nuclide	Intake mode	AMAD	Age	Bone
U-238	D	0.3	Infant	4.3
	D	0.3	Child	0.96
	D	0.3	Teen	2.7
	D	0.3	Adult	1.0
	D	1.0	Infant	4.4
	D	1.0	Child	0.96
	D	1.0	Teen	2.8
	D	1.0	Adult	1.0
	D	5.0	Infant	4.5
	D	5.0	Child	0.97
	D	5.0	Teen	2.8
	D	5.0	Adult	1.0
	W	0.3	Infant	5.1
	W	0.3	Child	1.0
	W	0.3	Teen	3.0
	W	0.3	Adult	1.0
	W	1.0	Infant	5.4
	W	1.0	Child	1.0
	W	1.0	Teen	3.1
	W	1.0	Adult	1.0
	W	5.0	Infant	6.0
	W	5.0	Child	1.0
	W	5.0	Teen	3.2
	W	5.0	Adult	1.0
	Y	0.3	Infant	1.9
	Y	0.3	Child	1.4
	Y	0.3	Teen	1.7
	Y	0.3	Adult	1.0
	Y	1.0	Infant	2.1
	Y	1.0	Child	1.4
	Y	1.0	Teen	1.8
	Y	1.0	Adult	1.0
	Y	5.0	Infant	3.2
	Y	5.0	Child	1.3
	Y	5.0	Teen	2.2
	Y	5.0	Adult	1.0

[1]Bone is defined here as the marrow-free skeleton, and doses to bone are defined as in NUREG/CR-150.

NUREG/CR-4628
ORNL/TM-9890
Dist. Category RH

INTERNAL DISTRIBUTION

1. B. A. Berven
2-3. R. O. Chester
4-8. M. Cristy
9. J. L. Davis
10-14. D. E. Dunning, Jr.
15-19. K. F. Eckerman
20. W. R. Garrett
21. S. V. Kaye
22. G. D. Kerr
23. G. G. Killough
24. D. C. Kocher
25-29. R. W. Leggett
30. C. W. Miller
31. C. R. Richmond
32. J. C. Ryman
33. C. S. Sims
34. R. E. Swaja
35. P. J. Walsh
36. J. P. Witherspoon
37. H. A. Wright
38. Central Research Library
39. Document Reference Section
40-41. Laboratory Records
42. Laboratory Records, ORNL - RC
43. ORNL Patent Office
44. RSIC Library

EXTERNAL DISTRIBUTION

45. Office of the Assistant Manager for Energy Research and Development, Department of Energy, Oak Ridge Operations Office, Oak Ridge, TN 37831

46-47. Technical Information Center, Office of Scientific and Technical Information, U.S. Department of Energy, P. O. Box 62, Oak Ridge, TN 37831

NRC FORM 335 (2-84) NRCM 1102, 3201, 3202

U.S. NUCLEAR REGULATORY COMMISSION

BIBLIOGRAPHIC DATA SHEET

SEE INSTRUCTIONS ON THE REVERSE

1. REPORT NUMBER (Assigned by TIDC, add Vol. No., if any)
NUREG/CR-4628
ORNL/TM-9890

2. TITLE AND SUBTITLE
RELATIVE AGE-SPECIFIC RADIATION DOSE COMMITMENT FACTORS FOR MAJOR RADIONUCLIDES RELEASED FROM NUCLEAR FUEL FACILITIES

3. LEAVE BLANK

4. DATE REPORT COMPLETED
MONTH: May
YEAR: 1968

5. AUTHOR(S)
M. Cristy, R. W. Leggett, D. E. Dunning, Jr., and K. F. Eckerman

6. DATE REPORT ISSUED
MONTH: June
YEAR: 1968

7. PERFORMING ORGANIZATION NAME AND MAILING ADDRESS (Include Zip Code)
Health and Safety Research Division
Oak Ridge National Laboratory
P. O. Box X
Oak Ridge, Tennessee 37831

8. PROJECT/TASK/WORK UNIT NUMBER

9. FIN OR GRANT NUMBER
B0293

10. SPONSORING ORGANIZATION NAME AND MAILING ADDRESS (Include Zip Code)
Uranium Fuel Licensing Branch
Division of Fuel Cycle and Material Safety
U.S. Nuclear Regulatory Commission
Washington, DC 20555

11a. TYPE OF REPORT
Topical

b. PERIOD COVERED (Inclusive dates)

12. SUPPLEMENTARY NOTES

13. ABSTRACT (200 words or less)
During the licensing process for nuclear fuel facilities, committed dose equivalents must be calculated for potential exposures to people in the area around these facilities. These committed dose equivalents are usually calculated from tabulated dose-conversion factors that convert the quantity of radioactive material potentially taken in by individuals through ingestion or inhalation. For calculating committed dose equivalents to children, the Nuclear Regulatory Commission has in the past appealed to age-specific dose-conversion factors listed in NUREG-0172 (1977), which is based on a computational methodology found in ICRP Publication 2 (1959). Since the publication of NUREG-0172 new models and new concepts of risk have been provided in ICRP Publications 26 and 30 (1977, 1979). These documents provide a detailed methodology for calculating dose-conversion factors for the various radionuclides for an adult reference man. The report NUREG/CR-0150 (1981) provides dose- conversion factors for an adult based on ICRP Publications 26 and 30 but does not provide dose-conversion factors for children. In this report are tabulated age-specific dose-conversion factors, given as multiples of the adult values, for inhalation or ingestion of each of the following isotopes: U-234, U-235, U-238, Th-228, Th-230, Th-232, Ra-226, Ra-228, Pb-210, or Po-210. Our methodology is consistent as far as practical with that of ICRP Publications 26 and 30, but we have modified and extended the ICRP methodology as necessary to include age dependence and to include metabolic and dosimetric information that has been developed since the issuance of these ICRP documents.

14. DOCUMENT ANALYSIS – a. KEYWORDS/DESCRIPTORS

nuclear fuel facilities
organ dose
health effects
uranium
thorium
radium
polonium
lead
age dependence
metabolism
ICRP Publication 26
ICRP Publication 30
NUREG/CR-0172
NUREG/CR-0150

15. AVAILABILITY STATEMENT
Unlimited

16. SECURITY CLASSIFICATION
(This page) Unclassified
(This report) Unclassified

17. NUMBER OF PAGES

18. PRICE