COPY

K/DSAR-11
Revision 2

MARTIN MARIETTA

00967

FINAL SAFETY ANALYSIS REPORT

FOR TSCA INCINERATOR

March 16, 1991

ChemRisk Document No. 239

APPROVAL FOR RELEASE

Document: # K/DSAR-11/R2 ; Date 3/16/91 ;
Title/Subject FINAL SAFETY ANALYSIS REPORT FOR TSCA INCINERATOR -- Compiled by JD Joyner

Approval for unrestricted release of this document is authorized by the Oak Ridge K-25 Site Classification and Information Control Office, Martin Marietta Energy Systems, Inc., PO Box 2003, Oak Ridge, TN 37831-7307.

K-25 Classification & Information Control Officer — Date 1/6/93

MANAGED BY
MARTIN MARIETTA ENERGY SYSTEMS, INC.
FOR THE UNITED STATES
DEPARTMENT OF ENERGY

#239

ChemRisk Repository Number: 239 Document Number: 00967
Title: Final Safety Analysis for TSCA Incinerator
Authors: J. D. Joyner
Abstract: This document provides a safety analysis for the TSCA Incinerator. In addition, it provides information on the incinerator process, effluent management, monitoring and protection systems, ventilation, systems, and waste disposal.
Reviewer: J. Lamb
Document Source or Location: K-25 SDRC
Date Document Issued: 03/16/91
Classification Category: unc
Site Document Addresses: K
Primary Document Category: HO
Secondary Document Category: hp
Date Entered: 11/16/92
Entered By: cmv
Keywords: Incinerator, Ventilation system, Process description, Monitoring

---

DISCLAIMER

This report was prepared as an account of work sponsored by an agency of the United States Government. Neither the United States Government nor any agency thereof, nor any of their employees, makes any warranty, express or implied, or assumes any legal liability or responsibility for the accuracy, completeness, or usefulness of any information, apparatus, product, or process disclosed, or represents that its use would not infringe privately owned rights. Reference herein to any specific commercial product, process, or service by trade name, trademark, manufacturer, or otherwise, does not necessarily constitute or imply its endorsement, recommendation, or favoring by the United States Government or any agency thereof. The views and opinions of authors expressed herein do not necessarily state or reflect those of the United States Government or any agency thereof.

MAR 16 1991

K/DSAR-11, Rev. 2

FINAL SAFETY ANALYSIS REPORT FOR COMPLIANCE WITH THE TOXIC SUBSTANCES CONTROL ACT (TSCA) K-1435 INCINERATION FACILITY, OAK RIDGE K-25 SITE

REVISION 2

March 16, 1991

Compiled by
J. D. Joyner
System Safety Engineering

with input from

Engineering Division Project Team

TSCA Incinerator Operations

Prepared by the
Oak Ridge K-25 Site
Oak Ridge, Tennessee 37831
managed by
MARTIN MARIETTA ENERGY SYSTEMS, INC.
for the
U.S. DEPARTMENT OF ENERGY
under contract DE-AC05-84OR21400

MAR 13 1991

Report K/DSAR-11, Rev. 2

REVISION 2

FINAL SAFETY ANALYSIS REPORT FOR COMPLIANCE WITH THE TOXIC SUBSTANCES CONTROL ACT (TSCA) K-1435 INCINERATION FACILITY, OAK RIDGE K-25 SITE

APPROVALS

SSE K-25 Site Coordinator, J. A. Hoffmeister	3/5/91 Date
TSCA Operations Manager, C.E. Frye	3/11/91 Date
K-25 Environmental, Health and Safety Council Chairman, J. S. Dalton	3-5-91 Date
K-25 Facility Safety Manager, L. Wyatt	3/11/91 Date
for K-25 Site Manager, L. E. Hall	3/11/91 Date
DOE-ORO Contracting Officer's Representative	3/16/91 Date

MAR 16 1991

CONTENTS

	Page	Revision
LIST OF TABLES	vii	
LIST OF FIGURES	x	
1. INTRODUCTION AND GENERAL OBJECTIVES OF THE PROJECT	1-1	5/13/88
2. SUMMARY SAFETY ANALYSIS	2-1	5/13/88
2.1 Radiation Safety	2-2	5/13/88
2.2 Hazardous or Toxic Material Safety	2-2	5/13/88
2.3 Criticality Safety	2-4	5/13/88
2.4 Fire	2-4	5/13/88
2.5 Explosion and High Pressure	2-4	5/13/88
2.6 Natural Phenomena	2-5	5/13/88
2.7 Risk Assessment/Conclusion	2-5	5/13/88
3. SITE	3-1	5/13/88
References for Section 3	3-5	5/13/88
4. FACILITY AND PROCESS DESCRIPTION	4-1	5/13/88
4.1 General Facility Description	4-1	5/13/88
4.1.1 Buildings	4-1	5/13/88
4.1.2 Tank Farm and Drain Tanks	4-5	5/13/88
4.1.3 Incineration Area	4-6	5/13/88
4.1.4 Concrete Tanks	4-7	5/13/88
4.1.5 Utilities and Support Services	4-7	5/13/88
4.2 Waste Feed Characterization	4-10	5/13/88
4.2.1 Classification and Major Categories of Waste	4-10	5/13/88
4.2.2 Quantities of Waste	4-12	5/13/88
4.2.3 Waste Analysis Plan	4-12	5/13/88
4.2.4 Waste Characteristics and Annual Feed Rates	4-17	5/13/88
4.2.5 Design Basis and Heat and Material Balance	4-21	5/13/88
References for Section 4.2	4-24	5/13/88
4.3 Process Description	4-25	5/13/88
4.3.1 Receiving and Sorting	4-26	5/13/88
4.3.2 Process Storage	4-34	5/13/88

	Page	Revision
4.3.3 Feed Preparation	4-38	5/13/88
4.3.3.1 Liquid Waste Blending	4-38	5/13/88
4.3.3.2 Drum Handling System	4-39	5/13/88
4.3.3.3 Shredder System	4-46	5/13/88
4.3.4 Waste Feed Systems	4-50	5/13/88
4.3.4.1 Shredded Product Conveyor System	4-50	5/13/88
4.3.4.2 Bulk Solids Feed System	4-53	5/13/88
4.3.4.3 Ram Feeder System	4-55	5/13/88
4.3.4.4 Package Drop	4-59	5/13/88
4.3.4.5 Bottle Drop System	4-59	5/13/88
4.3.4.6 Liquid Waste Feed System	4-60	5/13/88
4.3.4.7 Sludge Waste Feed System	4-66	5/13/88
4.3.5 Incineration Systems	4-66	5/13/88
4.3.5.1 Primary Combustion System	4-68	5/13/88
4.3.5.2 Mixing Chamber	4-72	5/13/88
4.3.5.3 Ash Handling System	4-73	5/13/88
4.3.5.4 Secondary Combustion System	4-73	5/13/88
4.3.6 Process Gas Cleaning System	4-76	5/13/88
4.3.6.1 Quench Chamber	4-76	5/13/88
4.3.6.2 Venture Scrubber	4-80	5/13/88
4.3.6.3 Mist Eliminator	4-80	5/13/88
4.3.6.4 Packed Bed Scrubber	4-81	5/13/88
4.3.6.5 Ionizing Wet Scrubber	4-81	5/13/88
4.3.6.6 Scrubbing Solution Control System	4-82	5/13/88
4.3.6.7 Induced Draft Fan	4-82	5/13/88
4.3.6.8 Stack	4-83	5/13/88
4.3.7 Effluent Management	4-84	5/13/88
4.3.8 Instrumentation and Controls	4-84	5/13/88
4.4 Operational and Control Features	4-85	5/13/88
4.4.1 Monitoring and Protection Systems	4-85	5/13/88
4.4.1.1 Control Room	4-86	5/13/88
4.4.1.2 Field-Mounted Instrumentation	4-86	5/13/88
4.4.1.3 Tank Monitoring	4-87	5/13/88
4.4.1.4 Oxygen Monitoring Systems	4-87	5/13/88
4.4.1.5 Process Equipment Interlocks	4-88	5/13/88
4.4.2 Confinement Systems	4-92	5/13/88
4.4.2.1 K-1435B PCB Drum Storage Area	4-92	5/13/88
4.4.2.2 K-1435B Non-PCB Drum Storage Area and Tank Farm	4-93	5/13/88
4.4.2.3 Incinerator Area	4-95	5/13/88
4.4.3 Ventilation Systems	4-95	5/13/88
4.4.3.1 Drum Handling Air Sweep System	4-95	5/13/88
4.4.3.2 Bulk Solids Conveyor Air Sweep System	4-97	5/13/88
4.4.4 Process Waste Disposal Systems	4-97	5/13/88
4.4.4.1 Gaseous Effluents	4-97	5/13/88
4.4.4.2 Liquid Effluents	4-101	5/13/88
4.4.4.3 Solid Effluents	4-106	5/13/88
4.4.5 Criticality Control Considerations	4-108	5/13/88

	Page	Revision
4.4.6 Fire Protection Systems	4-109	5/13/88
4.4.7 Explosion and Pressure Relief Systems	4-111	5/13/88
4.4.7.1 Automatic Shutdown System	4-112	5/13/88
4.4.7.2 Atmosphere Control System	4-115	5/13/88
4.4.7.3 Blowout and Pressure Relief Panels	4-116	5/13/88
4.4.8 Radiation Monitoring	4-116	5/13/88
References for 4.4	4-118	5/13/88
4.5 Administrative Controls	4-119	5/13/88
5. ACCIDENT ANALYSIS	5-1	3/16/91
5.1 Introduction and Approach	5-1	3/16/91
5.1.1 Hazards and Accidents	5-2	3/16/91
5.1.2 Objectives	5-2	3/16/91
5.2 System Safety Adequacy for Normal Operation	5-3	3/16/91
5.2.1 Radiation Safety	5-3	3/16/91
5.2.2 Hazardous or Toxic Materials	5-3	3/16/91
5.2.3 Criticality Safety	5-4	3/16/91
5.2.4 Fire Safety	5-4	3/16/91
5.2.5 Explosion or High Pressure	5-4	3/16/91
5.2.6 Safety-Related Monitoring	5-5	3/16/91
5.2.7 Engineering Controls and Worker Protection	5-5	3/16/91
5.2.8 Administrative Procedures	5-5	3/16/91
5.2.9 Spill Prevention Control and Countermeasures	5-5	3/16/91
5.2.10 System Testing	5-10	3/16/91
5.3 Abnormal Conditions and Accidents	5-10	3/16/91
5.3.1 Accident Summary	5-10	3/16/91
5.3.2 Radiation	5-18	3/16/91
5.3.3 Hazardous or Toxic Material	5-19	3/16/91
5.3.3.1 Liquid Release from Large Spill (PS-1)	5-19	3/16/91
5.3.3.2 Gaseous Release from Thermal Relief Vent (I-6)	5-20	3/16/91
5.3.4 Criticality	5-22	3/16/91
5.3.5 Fire	5-24	3/16/91
5.3.5.1 Fire in the Storage Area (PS-2)	5-24	3/16/91
5.3.5.2 Fire in Shredder (FP-3)	5-26	3/16/91
5.3.5.3 Major Fire in Tank Farm (PS-2M)	5-28	3/16/91
5.3.6 Explosion or High Pressure	5-31	3/16/91
5.3.6.1 Explosion in Shredder (FP-4)	5-32	3/16/91
5.3.6.2 Explosion in Shredded Product Hopper (FP-4)	5-32	3/16/91
5.3.6.3 Steam Overpressure/Explosion in Secondary Combustion/Ash Quench (I-8)	5-34	3/16/91
5.3.6.4 Explosion in Incinerator Due to Natural Gas Buildup (I-10)	5-36	3/16/91
5.3.7 Equipment/System Failure [New]	5-37	3/16/91
5.3.7.2 Stack Falling (OG-7) [New]	5-39	3/16/91

	Page	Revision
5.3.7.3 Liquid Waste Feed Pump Failure (PS-3) [New]	5-40	11/90
5.3.7.4 Burns/Exposure in SCC and SCC Crossover Section (I-9)	5-41	3/16/91
5.4 Natural Phenomena	5-43	3/16/91
5.4.1 Earthquake	5-43	3/16/91
5.4.2 Tornadoes and Extreme Winds	5-43	3/16/91
5.4.3 Floods	5-44	3/16/91
5.4.4 Lightning	5-44	3/16/91
5.5 Impact on Adjacent Operations	5-45	3/16/91
5.6 Impact on Occupational Health and Safety	5-46	3/16/91
5.7 Impact on Public Health	5-46	3/16/91
References for Section 5	5-48	3/16/91
6. QUALITY ASSURANCE	6-1	5/13/88
6.1 ORGDP Quality Assurance Program	6-1	5/13/88
6.2 Engineering Quality Assurance Program	6-2	5/13/88
6.3 Project Quality Assurance Assessment and Plan	6-2	5/13/88
References for Section 6	6-3	5/13/88
7. CONDUCT OF OPERATIONS	7-1	5/13/88
7.1 Introduction	7-1	5/13/88
7.2 Organization	7-1	5/13/88
7.3 Training	7-5	5/13/88
7.4 Testing Program	7-7	5/13/88
7.5 Configuration Control	7-7	5/13/88
7.6 Procedures	7-7	5/13/88
7.7 Safety Review and Documentation Program	7-8	5/13/88
7.8 Operational Safety Review Committee	7-8	5/13/88
7.9 Nuclear Criticality Safety	7-10	5/13/88
7.10 Emergency Planning	7-11	5/13/88
7.11 Record Keeping and Reporting	7-12	5/13/88

APPENDICES

A. Instrument Loops with Alarms and Interlocks	A-1	Del 4/88
B. Combustion System Interlock and Shutdown Description	B-1	5/13/88
C. Interlock and Shutdown Schedule	C-1	Del 4/88
D. Technical Report Fire Protection Memorandum	D-1	5/13/88
E. Risk Analysis Methodology	E-1	5/13/88
F. Accident/Risk Table	F-1	3/16/91
G. Failure Modes and Effects Analysis	G-1	5/13/88
H. Probability and Fault Tree for Accident Scenarios	H-1	5/13/88
I. Process and Instrument Diagrams	I-1	5/13/88
J. Control Logic flow Sheets	J-1	5/13/88
K. Electrical Schematic Diagrams	K-1	5/13/88
L. Major Fire in Tank Farm Bounding PCB Fire Accident Scenario	L-1	03/16/91

LIST OF TABLES

		Page	Revision
4.2-1	Chain-of-custody procedures for sampling, shipping, and receiving off-site wastes	4-11	5/13/88
4.2-2	Summary of waste information	4-13	5/13/88
4.2-3	Approximate quantities of waster materials	4-13	5/13/88
4.2-4	Waste analysis parameters and rationale	4-14	5/13/88
4.2-5	Minimum frequency of analysis and rationale	4-15	5/13/88
4.2-6	Waste characterization summary - major parameters	4-18	5/13/88
4.2-7	Waste characterization summary - elemental contaminants	4-19	5/13/88
4.2-8	Waste characterization summary - uranium contaminants	4-20	5/13/88
4.2-9	Design waste loads for the incineration facility	4-22	5/13/88
4.3-1	Contents, capacities, and dimensions for the K-1435 tanks	4-35	5/13/88
4.3-2	Typical chemicals known to be encountered in the drum handling system	4-44	5/13/88
4.3-3	Maximum case design conditions for gas and liquid streams for process gas cleaning system	4-78	5/13/88
4.4-1	Process equipment interlocks for K-1435 incineration facility	4-89	5/13/88

LIST OF TABLES (continued)

		Page	Revision
4.4-2a	Atmospheric emission summary: toxic chemicals	4-99	5/13/88
4.4-2b	Atmospheric emission summary: radionuclides	4-100	5/13/88
4.4-3a	Scrubber blowdown composition: toxic chemicals	4-102	5/13/88
4.4-3b	Scrubber blowdown composition: radionuclides	4-103	5/13/88
5.2-1	Summary of control technology for K-1435 incineration facility at K-25	5-5	3/16/91
5.3-1	Accidents by category [Revised]	5-10	3/16/91
5.3-2	Accident scenarios by area function [Revised]	5-11	3/16/91
5.3-3	Summary of systems for preventing or mitigating accidents	5-14	3/16/91
5.3-4	Predicted maximum downwind PCB concentrations resulting from a fire at the shredder	5-26	3/16/91
E-1	Probability rating scale	E-4	5/13/88
E-2	Hazard rating and consequence definitions	E-5	5/13/88
F-1	Accident/scenario table (Rev. 2) for K-1435 incineration facility	F-1	3/16/91
I-1	List of P&ID drawings	I-1	5/13/88
J-1	List of control logic flowsheets	J-1	5/13/88
K-1	List of electrical schematic drawings	K-1	5/13/88
L.3-1	PCB fire by-products estimates developed from fire data	L-8	3/16/91
L.4-1	Estimates of PCB concentrations	L-11	3/16/91
L.4-2	Estimates of PCB concentrations and combustion products	L-11	3/16/91
L.4-3	Estimates of ground-surface concentrations	L-11	3/16/91
L.5-1	Lowest lethal doses of TCDD in laboratory assays	L-14	3/16/91

LIST OF TABLES (continued)

		Page	Revision
L.5-3	Relative potency of congeners	L-16	3/16/91
L.5-4	Relative carcinogenic potencies of PCB fire products	L-18	3/16/91
L.5-5	Summary of airborne carcinogenic potency of fire products based on the potency of PCBs	L-19	3/16/91
L.6-1	Radiological concentrations and exposures	L-21	3/16/91

LIST OF FIGURES

		Page	Revision
1-1	Uranium Content Limit in Facility Feed Streams	1-3	5/13/88
3.1-1	United States Department of Energy Oak Ridge Reservation	3-2	5/13/88
3.1-2	Oak Ridge Gaseous Diffusion Plant	3-3	5/13/88
3.1-3	Site of the K-1435 incineration facility	3-4	5/13/88
4.1-1	Overall layout of K-1435 incineration facility	4-2	5/13/88
4.1-1	Plan view of K-1435 incineration facility	4-3	5/13/88
4.3-1	Block flow diagram for K-1435 incineration facility	4-27	5/13/88
4.3-2	Simplified process flow diagram for K-1435 incineration facility	4-28	5/13/88
4.3-3	Drum handling system	4-40	5/13/88
4.3-4	General arrangement and layout of shredder system	4-47	5/13/88
4.3-5	Ram feeder for K-1435 incineration facility	4-57	5/13/88
4.3-6	Liquid feed system	4-61	5/13/88
4.3-7	Liquid waste (PCB) feed system	4-63	5/13/88
4.3-8	Liquid waste (non-PCB) feed system	4-64	5/13/88
4.3-9	Block flow diagram of incineration systems	4-67	5/13/88
4.3-10	Flow of gas and liquid streams of process gas cleaning system	4-77	5/13/88

LIST OF FIGURES (continued)

		Page	Revision
4.4-1	Temperature sensor locations for incineration and process gas cleaning systems	4-91	5/13/88
4.4-2	Liquid and aqueous waste management system	4-104	5/13/88
4.4-3	Solid waste management system	4-107	5/13/88
4.4-4	Atmosphere control system for shredder systems	4-117	5/13/88
5.3-1	Accident scenario matrix for TSCA Incinerator FSAR	5-17	3/16/91
7.2-1	Organization of ORGDP	7-2	5/13/88
7.2-2	Organization of K-1435 incinerator operations	7-3	5/13/88
E-1	Risk matrix for DOE-ORO projects	E-7	5/13/88
H1-1	Fault tree for accident scenario FP-5 explosion in TSCA incinerator	H-6	5/13/88
H2-1	Fault tree for accident scenario RS-1 toxic material release from lift truck handling drums	H-9	5/13/88
H3-1	Fault tree for accident scenario I-6 opening of the thermal relief vent	H-12	5/13/88
L.1-1	Plan view of K-1435 incineration facility	L-2	3/16/91
L.1-2	Simplified process flow diagram for K-1435 tank farm	L-3	3/16/91

1. INTRODUCTION AND GENERAL OBJECTIVES OF THE PROJECT

As mandated by the United States Department of Energy (DOE) Order 5481.1B,[1] this final safety analysis report (FSAR) constitutes the safety review and documentation for the K-1435 Incineration Facility at the Oak Ridge Gaseous Diffusion Plant (ORGDP). The facility is provided for compliance with the Toxic Substances Control Act (TSCA) and with the Resource Conservation and Recovery Act (RCRA).

This new facility consists of systems for receiving, storing, blending, handling, and reducing to ash or destroying by incineration hazardous organic wastes (both solid and liquid phases), including polychlorinated biphenyls (PCBs) and radionuclides. Radionuclides include primarily low-assay uranium of less than one percent ^{235}U but may include assays of one percent or greater if the uranium content is less than 5 ppm. The incinerator facility includes systems for controlling gaseous, liquid, and solid wastes generated by the facility in compliance with federal, state, and local regulations.

The project also provides new facilities at the Paducah Gaseous Diffusion Plant and at the Portsmouth Gaseous Diffusion Plant for storing, packing, and shipping wastes to the incineration facility at ORGDP. Also, wastes will be shipped from the Y-12 plant, the Oak Ridge National Laboratory (ORNL), and the DOE Fernald facility in Ohio to be incinerated in the new incineration facility at ORGDP.

Under contract with Martin Marietta Energy Systems, Inc., International Waste Energy Systems (IWES) and Alberici Construction Company, both of St. Louis, Missouri, were responsible for designing and constructing the incineration and off-gas treatment facility, for developing and conducting an

intensive operator training program, and for conducting a comprehensive test program to meet acceptance criteria. Battelle Columbus Laboratories and Metcalf and Eddy assisted IWES in operator training and in developing the test program. The remainder of the facility was designed by Stearns Catalytic and constructed by Rust Engineering.

In keeping with DOE Order OR 5481.1B,[2] this FSAR accomplishes the following:

- Systematically identifies the potential hazards associated with the facility.
- Describes and analyzes the adequacy of the measures taken to eliminate, control, or mitigate the hazards.
- Analyzes the potential accidents and evaluates the associated risks.

The scope of this FSAR covers the receipt of wastes at the incineration facility and the subsequent disposition of the wastes. The FSAR does not address the new facilities at the Paducah and Portsmouth plants nor the transportation of the wastes from any facility to the incineration site. Also, the FSAR does not address uranium-contaminated wastes that do not meet the following uranium acceptance criteria:

(1) no limit on uranium content for assays less than one percent ^{235}U,

(2) less than 5 ppm uranium content for assays of one percent ^{235}U or greater (See Fig. 1-1)

The organization of this document follows the content and the format established by DOE in Attachment 1 of OR 5481.1B. Following this introduction, Section 2 summarizes the findings of the accident analysis and the potential risk involved in terms of potential impact of the operation on the health and safety of the public and of the operating personnel. Section 3 describes the

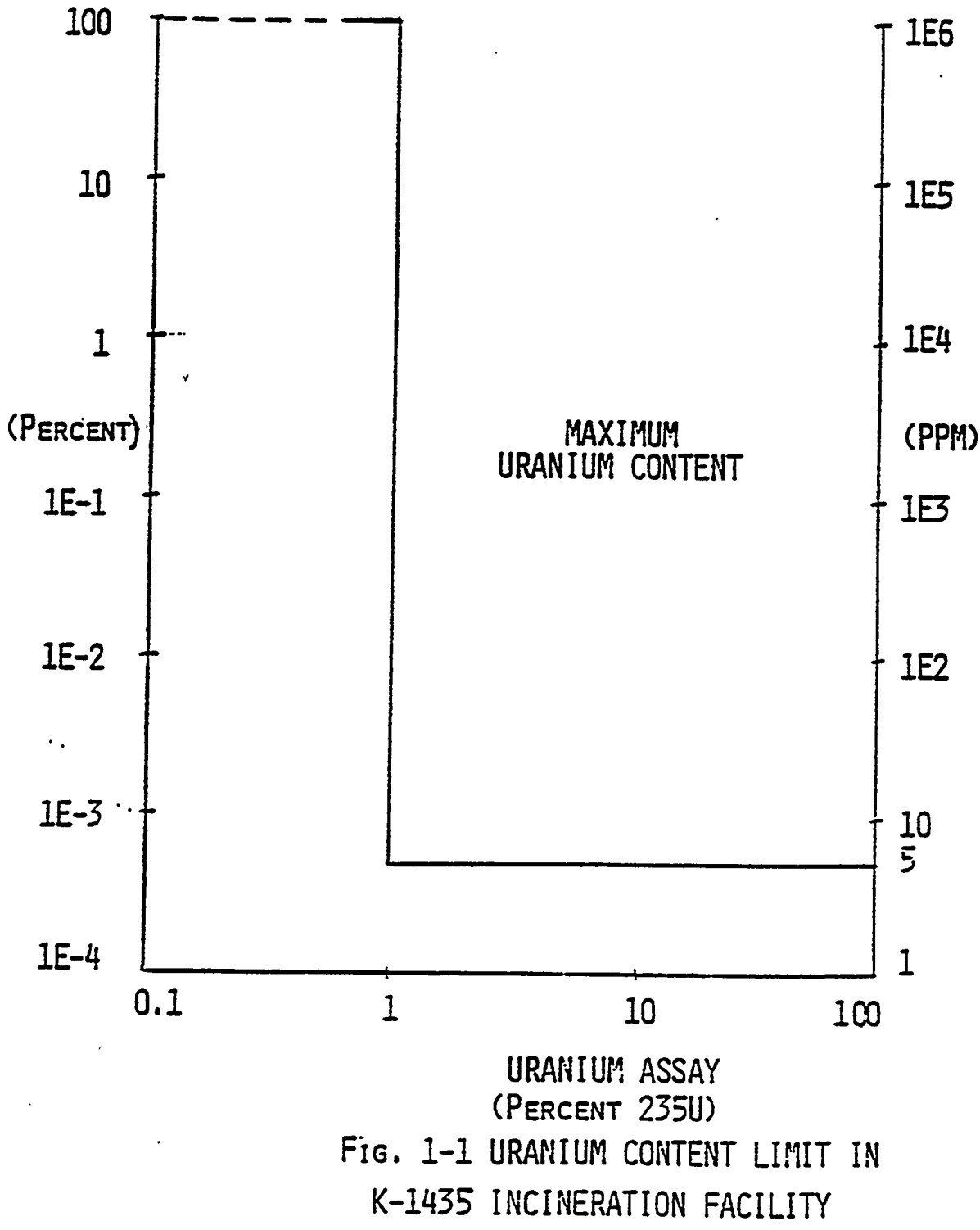

FIG. 1-1 URANIUM CONTENT LIMIT IN K-1435 INCINERATION FACILITY

site location and characteristics. Section 4 describes the overall facility, the waste characteristics, design basis, heat and material balance, and the process systems and components. Section 5 presents the accident analysis based on postulated accident situations or upset conditions. Section 6 describes the quality assurance program/plans. Finally, Section 7 addresses the requirements for the conduct of operations.

The K-1435 incineration facility is being provided to process PCB containing materials and RCRA hazardous materials that are contaminated with various radionuclides there by lessening the environmental concerns for the storage of these materials. An Environmental Impact Statement (EIS) was prepared[3] and later revised[4] to reflect changes in the project. The text or subject matter of the environmental documents is not generally repeated in this FSAR although reference is made when certain accident scenarios are compared with normal operation.

References for Section 1

1. "Safety Analysis and Review System," DOE Order 5481.1B, United States Department of Energy, Office of Assistant Secretary for Environment, Safety, and Health, September 23, 1986.

2. "Safety Analysis and Review System," DOE Order OR 5481.1B, United States Department of Energy, Oak Ridge Operations, Safety and Environmental Control Division, May 23, 1984.

3. Final Environmental Impact Statement, Incineration Facility for Radioactively Contaminated Polychlorinated Biphenyls and other Wastes, DOE/EIS-0084, United States Department of Energy, Oak Ridge, Tennessee, June 1982.

4. Analysis of the Environmental Significance Resulting from Changes in the K-25 Toxic Substances Control Act Incineration Design and Waste Stream since the Issuance of the Final Environmental Impact Statement, Report by R. E. Saylor and others, Martin Marietta Energy Systems, Inc., Oak Ridge, Tennessee, August 16, 1985.

2. SUMMARY SAFETY ANALYSIS

The K-1435 Incineration Facility was evaluated, using techniques explained in Section 5, for a wide range of potential hazards. Numerous accidents are postulated on the basis of the historic record of operations involved in storing, handling, and processing toxic substances; however, most are not expected to occur in this incineration facility because of safety features incorporated in the design. Many postulated accidents are determined to be of such consequence should they occur or of such low probability of occurrence during the project life that detailed discussion and analyses are not provided. Several postulated accidents are discussed in Section 5.3 and involve fire, explosion, or release of toxic substances. The postulated accident (FP-5) having the most adverse consequences involved explosion in the shredded product hopper. Potential causes for accidents can be placed in three main categories: (1) operator error, (2) equipment failure, and (3) natural phenomena. Appendix F contains a summary of all the postulated accidents and the associated risk levels.

~~No Safety Systems~~ were identified for this facility using the ~~definition in~~ DOE Order 5481.1B namely:
Equipment and/or hardware that actively provide a safety function by preventing or mitigating accidents, thus assuring that the operation of the facility will not cause unacceptable risk to the safety and health of the employees and the public.

The hazards associated with the incineration facility primarily relate to releases or spills of hazardous/toxic materials and to fire or explosion, resulting in possible personnel exposure or in an environmental insult.

This section contains a summary of these hazards and the findings of the accident analysis presented in Section 5. The summary covers the following specific safety areas and concludes with an overall risk assessment of the operation:

- Radiation Safety
- Hazardous or Toxic Material Safety
- Criticality
- Fire
- Explosion or High Pressure
- Natural Phenomena
- Risk Assessment/Conclusion

2.1 Radiation Safety

Some uranium-contaminated materials, along with trace quantities of other radioactive nuclei, are included in the wastes that are received, stored, handled, and burned at the K-1435 Incineration Facility. During normal operations, the containers, vessels, and piping provide adequate containment and shielding of the radioactive wastes, including beta-emitting elements, as discussed in Section 5.2.1. Loss of containment would pose a concern for alpha radiation exposure of operating personnel. However, as discussed in Section 5.2.9, any leaks or spills would be confined within secondary containment systems and would be handled by trained personnel following the Spill Prevention Control and Countermeasure (SPCC) plan (K/L-1368), the contingency plan, ORGDP health physics procedures, and ORGDP procedures (B-341). Therefore, the concentration and percentage of uranium in the wastes, the facility features to prevent releases/spills, the containment systems, and the management controls and procedures reduce the risk from potential radiological accidents and their associated consequences to an extremely low level.

2.2 Hazardous or Toxic Material Safety

A potential hazard associated with the operation of the incineration facility is the release or spill of hazardous/toxic materials and subsequent exposure to the operating personnel and to the public. The major wastes are categorized as oils, solvents and chemicals, aqueous wastes, sludges, and solids. The

chemical and physical characteristics and the estimated quantities of these wastes are described in Section 4.2. Of primary concern are the PCB wastes, their degradation products, and the suspect cancer agents, including chloroform, benzene, and carbon tetrachloride. Spills will be handled using the SPCC plan and ORGDP Procedure B-341 mentioned in Section 2.1.

However, as described in Section 4.4 and discussed in Section 5.2, the design of the incineration facility and the plan for its operation include several systems/features and control measures that prevent or lessen exposure of operating personnel and the public to the hazardous chemical and physical agents during normal conditions and during accident situations. These systems include monitoring and protection systems (such as instrumentation and controls) to prevent hazardous conditions or unacceptable emissions to the environment, confinement/containment systems to either prevent or control any leaks and spills of hazardous materials, ventilation systems to prevent concentration of hazardous vapors/gases, and process waste disposal systems to control gaseous/liquid/solid wastes generated by the incineration facility.

General and specific control measures (Table 5.2-1) include engineering controls, worker protection, and administrative procedures for all phases of the incineration activities: receiving and storage, feed preparation, incineration, process gas cleaning (off-gas treatment), and solid/aqueous waste management. Engineering controls include the systems/features, previously mentioned, which are incorporated in the design and the SPCC plan. Worker protection includes the use of personal protective equipment, along with the application of current ORGDP programs. The combination of these control methods reduce the probability of accident situations and minimize the risk associated with the operation of the facility for both the employees and the public. Thus, the risk of potential exposure to hazardous/toxic agents is low or extremely low.

2.3 Criticality Safety

Criticality is prevented by the use of procedures and controls in the operation of the incineration facility. Any uranium-contaminated waste is accepted only after verification of its content and only if it meets the criticality safety analysis requirements (no limit on uranium content for assays less than one percent or less than 5 ppm U content for assays of one percent or greater ^{235}U). Under these conditions, accumulation of sufficient uranium (whose assay is one percent or greater) to achieve criticality is not credible; therefore, essentially no risk is associated with criticality.
Administrative controls (Section 4.5) pertain to criticality monitoring and prevention.

2.4 Fire

Measures to prevent, or to reduce the probability of, other potential fire (or explosion) situations include design integrity, oxygen-deficient atmospheres, proper ventilation, pressure relief devices, proper storage of wastes, fire protection systems, interlocks, and administrative procedures. These preventive/mitigative measures reduce the risk of personnel and public exposure to hazardous substances due to fire or explosion.

2.5 Explosion or High Pressure

Fire and explosion are the major identifiable mechanisms that could produce significant releases of hazardous substances. However, only one postulated accident scenario is ranked as having medium consequences. An explosion/fire in the shredded product hopper (accident FP-5 is described in Section 5.3.6 and in Appendix F, Table F-1). Several events, however, must occur for this accident to occur. Preventive measures must fail; these include an oxygen-deficient atmosphere (less than 5 percent oxygen), strategically placed oxygen monitors, interlocks, including flow switch interlocks in the nitrogen supply system,

and a local control panel to alert the operator. The probability of occurrence for this postulated scenario is low to medium. The consequence rating is considered medium to low, placing the potential accident in the low risk category as defined by the DOE-ORO-specified risk matrix (See Fig. 5.3-1).

Generally, high pressure safety is achieved by standard industrial measures. The burner management systems are based on state-of-the-art combustion technology and meet the requirements of applicable national codes, standards, and regulations.

2.6 Natural Phenomena

Natural phenomena are not considered significant factors in the safe operation of the incineration facility. While they are considered potential accident initiators, natural phenomena occurrences are not unique initiators for accidents.

The facility is designed to meet the project seismic basis for a design earthquake having a peak ground acceleration of 0.08g, and a high wind basis of 100 miles an hour. The elevation of the facility is above the flood plain. The risk from material releases due to natural phenomena caused incidents is expected to be extremely low.

2.7 Risk Assessment/Conclusion

Significant impacts on the health of the incineration facility employees or the public are not expected from the operation of the incineration facility during either normal conditions or postulated accident situations. Potential risk from exposure to PCBs, their degradation products, and low-level ionizing radiation would be low or extremely low.

During normal operation, adverse impact on the health and safety of facility employees is avoided by the incorporation of engineering controls in the facility design and by the implementation of administrative procedures in the operation of

the facility, as described in Sections 4.4 and 4.5 and discussed in Section 5.2. These control technologies/measures and worker protection practices, along with the ORGDP comprehensive health and safety program, limit worker exposure to the hazardous substances and, therefore, limit the risk to the health and safety of employees.

Significant impact on public health, likewise, is not expected to result from normal operation of the facility. The expected discharges of pollutants (including radionuclides) are so low that increases in risk to the public are not significant. (See Environmental Impact Statement and revision as listed in Section 1 references).

An unavoidable adverse impact of the operation of the incineration facility is the risk of accidents due to operator error, to equipment failure/malfunction, or to unlikely natural phenomena. However, the impact of such accidents is not expected to be excessive and the risk must be considered in relation to the potential risk associated with continued storage of the hazardous materials. As discussed in Section 5.2, the design of the facility and the plan for its operation include a number of features that reduce the likelihood of accident situations or upset conditions (Section 5.3) and limit the potential impact of such conditions should they occur. Many of these features reduce the probability of accidents to acceptable levels. The accident prevention measures cover the incineration activities and include monitoring and protection systems, ventilation systems, fire prevention measures, explosion and pressure relief systems, and administrative procedures. With proper adherence to the accident prevention measures along with the use of mitigative measures as fire protection systems and spill containment and control, should an accident occur the likelihood of detrimental effects on humans and on the environment is minimal.

Based on the accident analysis and on the premise that performance testing proves the adequacy of design, the conclusion is that the incineration facility poses no significant threat to employee or public safety and health. No situation was identified that could not be controlled adequately by facility features or by implementation of existing ORGDP safety and health policies and procedures. Fire protection and suppression equipment, engineering controls, and administrative procedures are used to reduce the probabilities of occurrence of accidents and to minimize the consequences of those accidents that might occur. Therefore, this summary shows, and the more detailed data in the subsequent sections confirm, that the K-1435 Incineration Facility is designed to operate safely under normal or postulated accident conditions. Additionally, performance testing prior to facility operation is expected to verify the adequacy of design.

3. SITE

This section discusses briefly the location of the K-1435 Incineration Facility with respect to the ORGDP site. Detailed site and environmental descriptions are contained in other documents, such as the Environmental Assessment of the Oak Ridge Gaseous Diffusion Plant Site,[1] the Environmental Impact Statement for the incineration facility,[2] and the site characteristics section (III) of the ORGDP Final Safety Analysis Report.[3]

This new incineration facility is constructed at the ORGDP on the DOE Oak Ridge Reservation in Tennessee. The Reservation is bounded by the Clinch River on the east and south and by the Cumberland Mountains to the west and north. The Reservation is south and west of the residential portion of Oak Ridge, northwest of Knoxville, and is located in Roane and Anderson counties. As shown in Figure 3.1-1, the ORGDP is in the southwestern (Roane County) portion of the Reservation and is on Poplar Creek near the confluence with the Clinch River. The incineration facility occupies approximately five acres in the eastern part of the ORGDP as shown in Figure 3.1-2.

Figure 3.1-3 shows the incinerator site in relation to other facilities. The site is at the head of a small valley in which a stream arises and flows to the K-1700 discharge. It is a few hundred feet from existing facilities: Atomic Vapor Laser Isotope Separation facilities (K-1037), Steam Plant (K-1501), waste oil storage (K-1425), and decontamination facilities (K-1420). Any impact of the incineration facility on adjacent facilities is addressed in Section 5.5 of the accident analysis.

Section 5.7 addresses the potential impact of the K-1435 incineration facility on the public.

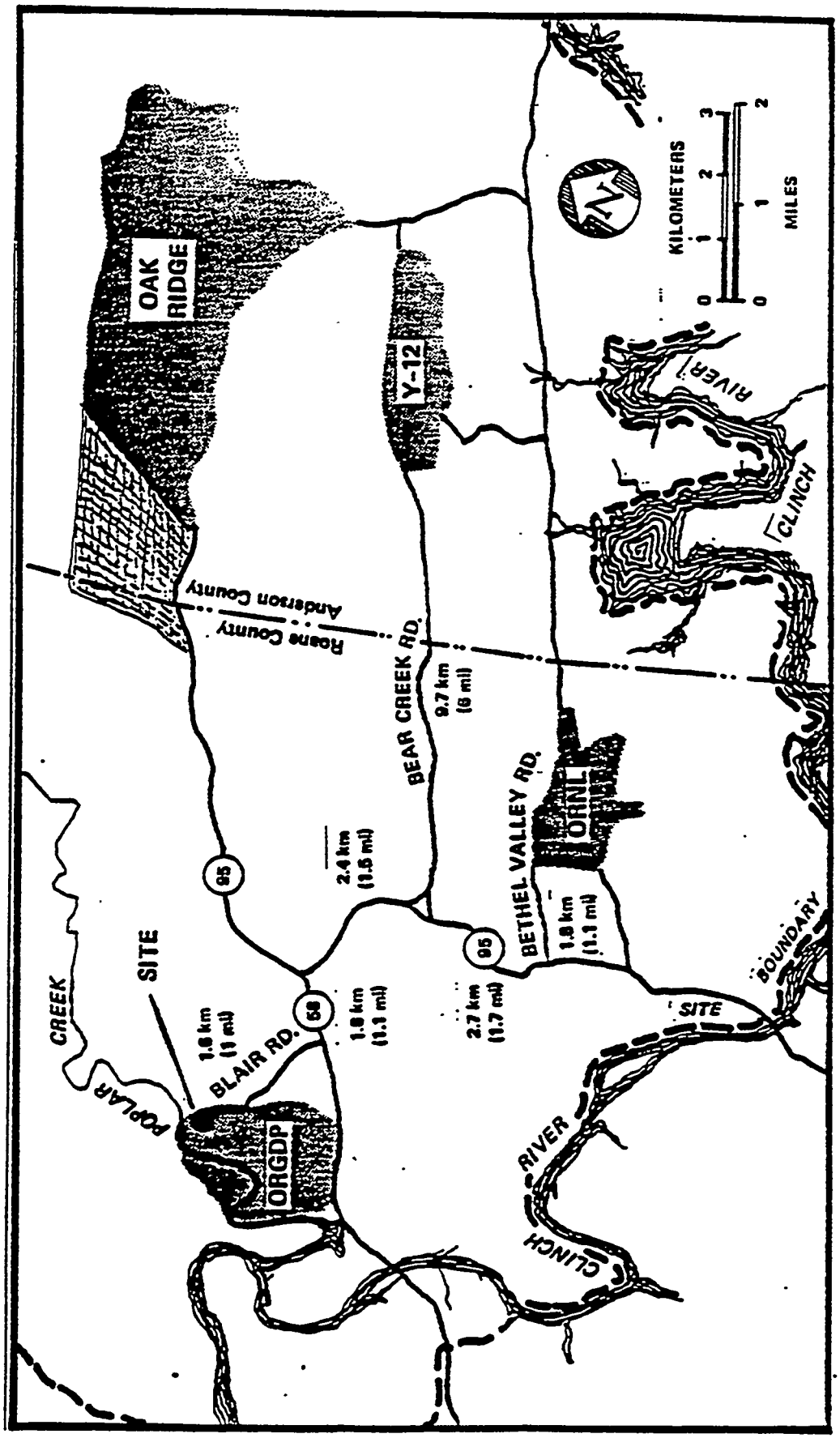

Figure 3.1-1. United States Department of Energy Oak Ridge Reservation

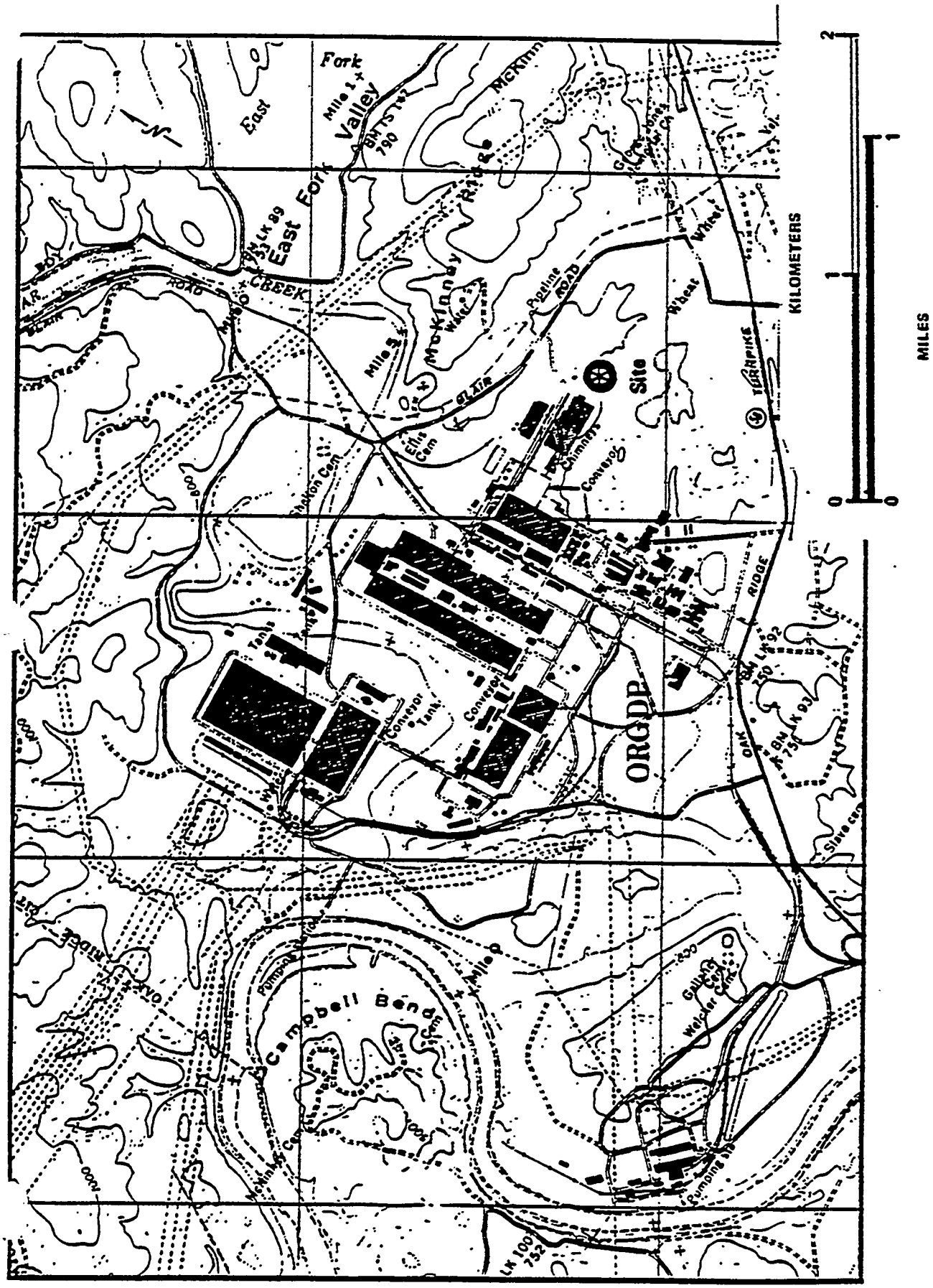

Figure 3.1-2. Oak Ridge Gaseous Diffusion Plant

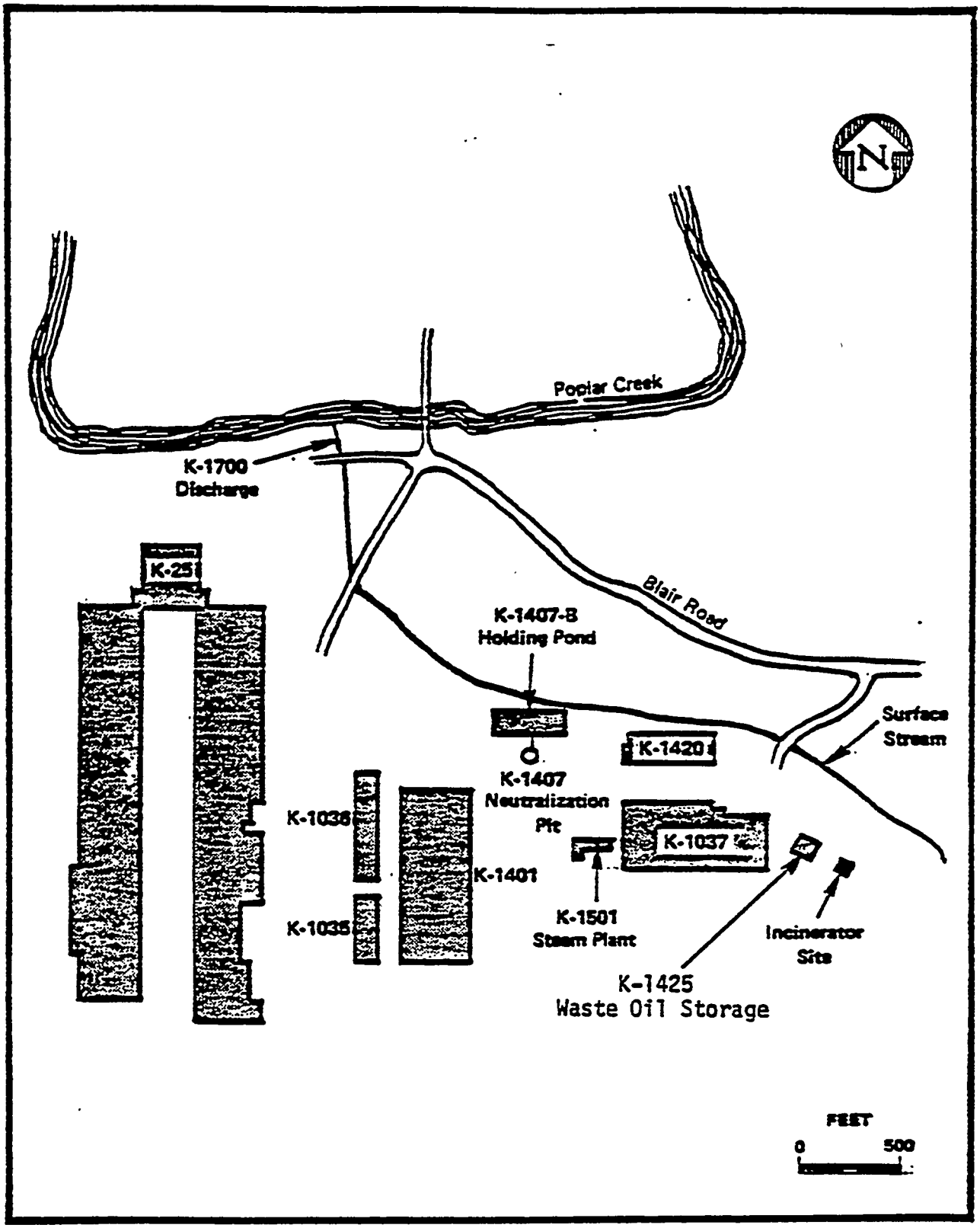

Figure 3.1-3. Site of the K-1435 incineration facility

Section 5.4 evaluates and assesses any hazards and risks associated with natural phenomena in the region.

References for Section 3

1. Environmental Assessment of the Oak Ridge Gaseous Diffusion Plant Site, DOE/EA-0106, United States Department of Energy, Oak Ridge, Tennessee, December 1979.

2. Final Environmental Impact Statement, Incineration Facility for Radioactively Contaminated Polychlorinated Biphenyls and Other Wastes, DOE/EIS-0084, United States Department of Energy, Oak Ridge, Tennessee, June 1982.

3. Oak Ridge Gaseous Diffusion Plant, Final Safety Analysis Report, K/D-5604, (Site: Section III), Martin Marietta Energy Systems, Inc., ORGDP, Oak Ridge, Tennessee, March 1985.

4. FACILITY AND PROCESS DESCRIPTION

This section describes the overall K-1435 Incineration Facility, the waste feed received for burning, the processes involved, the operational and control features, and the administrative procedures required for safety.

- General Facility Description
- Waste Feed Characterization
- Process Description
- Operational and Control Features
- Administrative Controls

4.1 General Facility Description

The new incineration facility includes structures, systems, and components for receiving, sorting, storing, preparing, and burning PCB materials, uranium-contaminated PCBs, and other hazardous and nonhazardous wastes in a rotary kiln incinerator. Figure 4.1-1 is an overall layout of the facility and Figure 4.1-2 is a detailed plan view. The structures include buildings, an unloading and storage area, a tank farm, an incinerator area, and concrete collection tanks. These structures and their utilities and support systems are described briefly, and the primary purposes of these facilities are given to provide an understanding of the overall operating philosophy. Appropriate detailed descriptions of the process systems and components are presented in Section 4.3.

4.1.1 Buildings

The incineration facility includes a Control Building, a Drum Handling Building, and an Unloading and Storage Area.

4.1.1.1 Control Building

The K-1435A Control Building houses the change rooms, a lunch room, a maintenance shop, a power distribution room, the

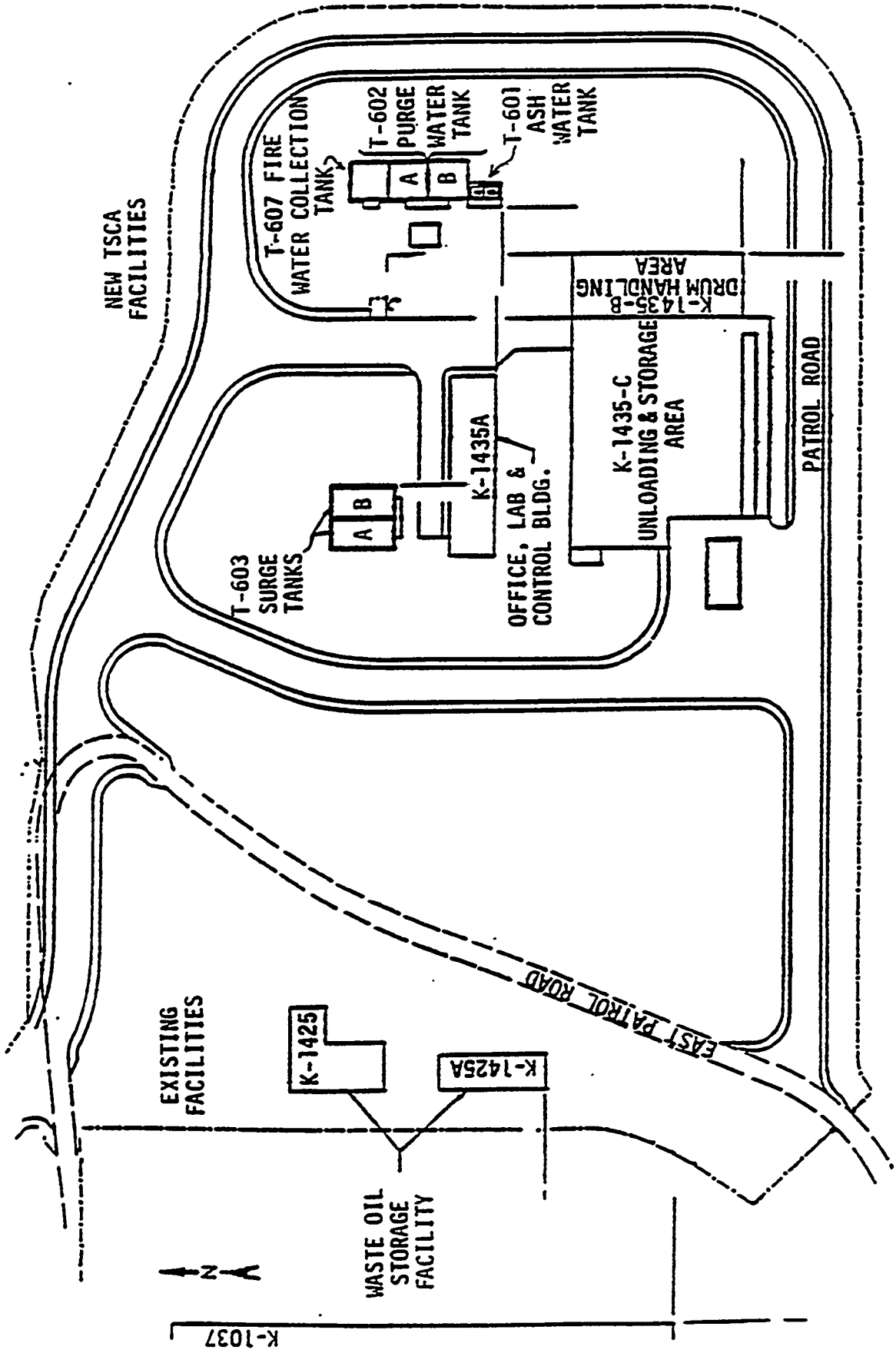

Figure 4.1-1. Overall layout of K-1435 incineration facility

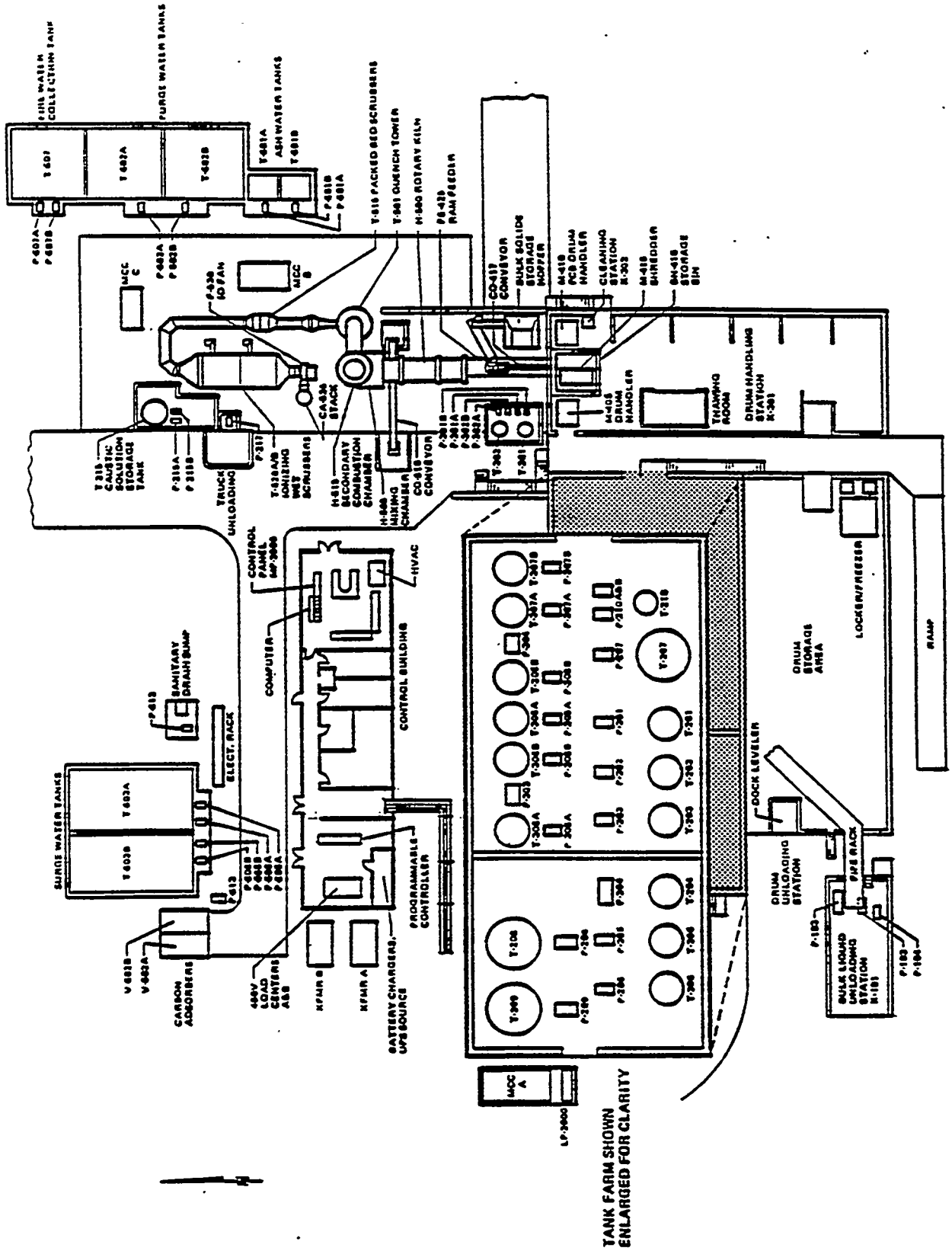

Figure 4.1-2. Plan view of K-1435 incineration facility

process control instrumentation, and a small laboratory with standard laboratory furnishings. The small laboratory is for quick-turnaround analytical tests, for waste compatibility tests, and for short-term sample storage. The main analytical laboratory for the facility is in Building K-1004C where two mass spectrometers are dedicated to this facility.

Building K-1435A has a structural steel rigid frame of truss and column construction erected on a reinforced concrete foundation. The siding and the roof are insulated corrugated metal. Interior walls are panel-covered studs. The building structure is designed in accordance with the Standard Building Code (SBC), with DOE General Design Criteria Appendix 6301, and with the seismic requirements of the Uniform Building Code (UBC) for Zone 2.

4.1.1.2 Drum Handling Building

The K-1435B Drum Handling Building houses the drum handling, the solids waste shredding, and the solids waste conveyance systems, as described in Section 4.3. It also contains a biological waste storage locker/freezer. The drum handling building's primary purpose is to store drummed PCB materials.

The building structure has a continuous roof ventilator along the ridge line. The structure has a curbed container storage area for PCB wastes and a temporary storage area for drums to be processed. The floor slab design live load is 500 lb/ft2 and is suitable for full forklift truck loading. The concrete floor slab is curbed and sloped to a trench, as described in Section 4.4.2.

Structural members supporting roof loads, except metal roof panels, are designed for an additional 5 lb/ft2 (25 lb/ft2 total roof load) to accommodate the mechanical and electrical equipment that are supported by the structural members.

The biological waste storage locker/freezer is a packaged walk-in type freezer with floor and inside storage racks. The floor has a drain piped to the outside. Access to the freezer is through a single swing-open door capable of being opened from both inside and outside. The storage volume is 320 cubic feet, and the cooling capacity is -10°F. The freezer is equipped with an electrically heated air vent and a high-temperature audio-visual alarm. All electrical components are explosion proof, meeting Class 1, Division 2, requirements of the National Electrical Code.

4.1.1.3 Unloading and Storage Area

The K-1435C Unloading and Storage Area is a curbed area for drum storage of non-PCB wastes and for tank storage of both PCB and non-PCB wastes. It is an open-walled structure that allows for future installation of metal wall panels to enclose the building and has a canopy roof. In addition to roof loads, the structure is designed to support one 3-ton monorail. This monorail is used for removing components and conducting maintenance on agitators and motors above the tank level. The underlying base of the area is a 6-inch reinforced concrete slab overlying a compacted crushed stone base. The floor slab design live load is 500 lb/ft^2 and is suitable for full forklift truck loadings. The floor slab is curbed and is sloped to a trench as described in Section 4.4.2.

4.1.2 Tank Farm and Drain Tanks

The tank farm is located in the K-1435C Unloading and Storage Area within the diked area, which drains to a collection sump. The tank farm is covered by a roof to minimize the amount of rain water that might require treatment and has sides that are open to allow proper ventilation.

Seventeen tanks provide storage for liquid wastes. Fifteen waste holding tanks are located in the tank farm, while two drain tanks are located in the K-1435D incinerator area. All these tanks are supported vertically above ground on pipe legs. Tank

foundations are designed to sufficiently support the weight of full tanks. The tank support legs are bolted to concrete pads within the diked tank farm area. The support legs are protected with fireproofing materials that provide a three-hour protection rating in accordance with ASTM E-119. One tank containing PCB aqueous wastes and three tanks containing non-PCB aqueous wastes are lined with 1/4-inch of Hetron 800 fiberglass-reinforced furan resin to prevent tank damage due to chemical attack. The two drain tanks in the K-1435D area have a 1/8-inch corrosion allowance, and all other tanks have a 1/16-inch corrosion allowance. Weld seams have been inspected in accordance with the manufacturer's specifications and with applicable construction codes at the time of tank fabrication to ensure the integrity of the weld seams throughout the expected service life of each tank. All tanks have been constructed in accordance with ASME construction codes and have a tensile strength of 17,500 psi for both shell and head.

4.1.3 Incineration Area

The K-1435D incinerator area supports the incineration and process gas cleaning equipment. The roof column bases on the east side of K-1435D are part of the concrete retaining wall; the steel roof supports on the east side rest on these column bases. The base for the roof support column on the west side of K-1435D is one foot north of K-1435B; the southwest corner roof column rests on this base. The subsoil in the K-1435D area supports at least a 2000-lb/ft^2 bearing capacity. The slab is diked for containment and slopes to drain into a rainwater collection sump that drains by gravity to a 12-inch drain line to the firewater collection tank (T-607). The containment dike has a minimum compressive strength of 3000 psi. The carbon absorber foundation in the area has a minimum compressive strength of 4000 psi. A diked space for unloading caustic solution is included in K-1435D. The area is sized to contain 5,000 gallons and has a 6-inch drain. Structural steel supports and connections are provided for the rotary kiln and related equipment, which are

anchored to the concrete slab. The design of the K-1435D area meets the Seismic Zone 2 criteria.

4.1.4 Concrete Tanks

The following concrete collection tanks are provided: Fire water collection tank (T-607), purge water tanks (T-602A and B), ash water tanks (T-601A and B), and surge tanks (T-603A and B).

4.1.5 Utilities and Support Services

Utilities and support services are extended from existing facilities to the incineration facility: electricity, natural gas, plant air, steam, nitrogen, fire water, and sanitary water. An emergency instrument air system and an intraplant communication system are also provided.

The existing electrical distribution system provides 13-kVA, 460-volt (nominal), 3-phase, 60-Hz power to the facility. Operating in conjunction with the electrical distribution system, a 20-kVA uninterruptible power supply provides 120/208-volt, 3-phase, 60-Hz emergency control power for the data acquisition system and for the instrumentation equipment loads. The facility design provides a backup electrical system to each individual motor control center within the project area. The K-27 switchyard is tied into the TVA area grid with multiple feeds. The K-27 switchyard is designed with automatic switching in the event any one source is lost. A dual feed is provided from the K-27 switchyard to the project dual transformers. Dual power feeders are provided in the project switchgear to each individual motor control center.

Natural gas and No. 2 fuel oil are required for supplemental fuel to the burners in the incineration system. However, the fuel oil is delivered by tank truck.

Plant air is required for liquid atomization in the incineration system burners and as a power source in pneumatic devices.

Steam is required for liquid atomization in the incineration system burners, for freeze protection heat tracing, and for cleaning such equipment as drum dump stations and conveyors.

Nitrogen is used in tanks and enclosures as an atmospheric diluent for suppression of fires and prevention of explosions.

A nitrogen back-up system is provided to supply nitrogen to the tank farm nitrogen blanketing system and to the shredded product hopper/conveyor system in the event the primary nitrogen supply is lost.

Fire water (emergency water) is required in equipment enclosures and hoppers and for process areas in K-1435A, B, C, and D. Fire water is used in process gas cleaning equipment as backup cooling water. A backup water system is provided in the design of the quench chamber. In the event of the loss of process water or recycle water, the system automatically switches over to feeding fire (protection system) water to cool hot gases.

Process water and caustic solution (50% by weight NoOH) are required for solution makeup in the process gas cleaning system. The caustic solution is delivered by tank truck.

Sanitary water is provided for the K-1435A Control Building and is used for process water. Backflow preventers are provided to ensure isolation between the sanitary and process water systems.

A process-related emergency instrument air system is installed in the unloading and storage area. The motors and all other electrical equipment are suitable for use in a Class I, Division II, Group D area as designated in the National Electrical Code (NEC). The compressor assembly has a local control panel containing alarm indicating lights. The compressor automatically starts when the instrument air system pressure drops to 85 psig. An alarm contact is provided for the "Emergency Instrument Air System On Alarm" in the K-1435A control room. The emergency instrument air system and equipment meet the requirements of applicable codes, standards, and regulations.

An intraplant communication system, a page/party line system, is provided for the K-1435 Incineration Facility.

4.2 Waste Feed Characterization

The K-1435 Incineration Facility receives wastes from several DOE sources. The sources include ORGDP, Oak Ridge National Laboratory, Oak Ridge Y-12 Plant, Paducah Gaseous Diffusion Plant, Portsmouth Gaseous Diffusion Plant, and the Fernald facility in Ohio. Since wastes come from offsite, as well as from onsite, DOE/ORO has developed the chain-of-custody procedures listed in Table 4.2-1 for identifying the wastes and their characteristics.[1] The generating facility is required to furnish ORGDP a laboratory analysis of the waste characteristics and the appropriate manifest documentation with the waste shipment.

The physical and chemical characteristics of the wastes (quantities, annual feed rates, design basis, heat and material balances) are discussed in this section:

- Classification and Major Categories of Wastes
- Quantities of Wastes
- Waste Analysis Plan
- Waste Characteristics Annual Feed Rates
- Design Basis and Heat and Material Balance

4.2.1 Classification and Major Categories of Wastes

Wastes for incineration are classified as primary or secondary according to chemical and physical characteristics, composition, heat value, and handling characteristics. The primary wastes include liquids, aqueous sludges, or solids that are fed directly into the primary combustion chamber (rotary kiln) through either dedicated burners or ram feeder.

The secondary wastes include only liquids (normally non-PCB oils, solvents, and chemicals) that are fed directly into the secondary combustion chamber. In terms of feed material, "non-PCB" waste is defined as waste containing 50 ppm or less of PCBs.

Table 4.2-1. Chain-of-custody procedures for sampling, shipping, and receiving off-site wastes

- The generator samples and analyzes the wastes that are to be shipped using the same procedures outlined in Table 4.2-4 for on-site waste.
- Immediately after sampling, the waste container or tank truck is sealed with a chain-of-custody seal that displays an identification number. This identification number then is recorded on the waste analysis sheet.
- The manifest and waste analysis sheet then is given to the transporter. The generator and the transporter will check the number on the chain-of-custody seal with the number recorded on the waste analysis sheet to ensure that they are the same. The generator and the transporter then check, sign, and date the manifest before the transporter departs.
- Upon arrival at the ORGDP facility, the transporter gives the manifest and waste analysis sheet to the disposal facility operator and/or supervisor-in-charge. The transporter and facility operator then check the number on the chain-of-custody seal with the number on the waste analysis sheet to ensure that they are the same. The facility operator then checks, signs, and dates the manifest.

Whether each liquid waste is burned by itself or blended with other liquid wastes depends on its liquid characteristics: heat value, organic halogen content, ash content, water content, viscosity, and reactivity. Liquid waste streams that are candidates for blending with each other must be analyzed to establish their compatibility. The waste analysis plan is described in Section 4.2.3.

Thus, the major wastes can be categorized as oils, solvents and chemicals, aqueous wastes, sludges, and solids. Table 4.2-2 classifies the hazard for each major category on the basis of contaminated waste. This facility is designed to handle RCRA and TSCA wastes. Wastes containing uranium with an assay less than one percent ^{235}U can be accepted with no limit on the uranium content, but wastes containing uranium with assays of one percent and greater ^{235}U are limited to a uranium content of less than 5 ppm.

4.2.2 Quantities of Wastes

Table 4.2-3 lists the estimated 1986 annual generation rate by waste name and the estimated 1986 inventory of each waste. Approximately 1.6 percent of the estimated annual quantity of waste material is expected to be PCBs; this value represents the probable maximum PCB content of the total waste material stream.

4.2.3 Waste Analysis Plan

A waste analysis plan is used to obtain the information necessary to store the wastes safely in containers or in storage tanks, to blend them safely, and to incinerate them in accordance with the RCRA and TSCA regulations. Table 4.2-4 lists the major categories of the wastes, the analytical parameters, and the rationale for selection of the parameters. Table 4.2-5 lists the frequency of analysis for each waste category and the rationale for the decision. Because wastes are not expected to change

Table 4.2-2. Summary of waste information

Hazardous Waste	Hazard
Oils	EP[a] toxic
Solvents and chemicals	Ignitible, toxic, EP toxic
Aqueous wastes	EP toxic, corrosive
Sludges	Toxic, EP toxic
Solids	Toxic

[a] Extraction Procedure

Table 4.2-3. Approximate quantities of waste materials

Waste Name	Annual Generation Rate 1986 (gal/yr)	Stored Quantity 1986 (gal)
Liquid & Oils (PCB contaminated)	20,100	295,000
Waste oils	111,400	289,000
Waste solvents	21,000	16,600
Waste Chemicals	44,000	24,600
Sludges	3,400	850
Aqueous Waste	38,300	58,500
Total	238,200	684,550
	(lb/yr)	(lb)
Solid wastes (PCB contaminated)	533,700	16,985,000
Misc. (Biological wastes, boxes, trash, etc)	750,000	16,000
Y-12 Biomass/denitrification sludge	5,837,200	
Total	7,120,900	17,001,000

Table 4.2-4. Waste analysis parameters and rationale

Hazardous Waste	Parameter	Rationale
Oils	Incineration parameters, (heat value, organic chlorine, and ash content)	Note a
Solvents and chemicals	Incineration parameters, (heat value, organic chlorine, and ash content)	Note a
Aqueous wastes	Incineration parameters, (heat value, organic chlorine, and ash content)	Note a
Sludges	Incineration parameters, (heat value, organic chlorine, and ash content)	Note a
Solids	Organic chlorine	Note b
New unknown, and process change liquid waste	Ignitability, corrosivity, reactivity, EP toxicity, heat value, organic chlorine, and ash content	Note c
New unknown, and process change solid waste	Reactivity, EP toxicity, heat value, organic, chlorine, and ash content	Note c

[a] This waste will be blended with other waste in a storage tank and fed to the incinerator as a part of the total blend. Monthly analyses for heat value, organic chlorine, and ash content will be performed on the blended liquid being fed to the incinerator. PCB content will be analyzed on 10,000-gallon storage tanks or if necessary on feed tanks.

[b] Process knowledge will be used to determine which solids are analyzed for organic chlorine. Trash and animal bedding, for example, will not be analyzed.

[c] The selection of the appropriate parameters to be analyzed for new, unknown, and process change wastes will be based on process knowledge.

Source: RCRA Part B Permit Application

Table 4.2-5. Minimum frequency of analysis and rationale

Hazardous Waste	Analysis	Frequency	Rationale
Oils	Incineration parameters, (heat value, organic chlorine, and ash content)	a	Table 4.2-4
Solvents and chemicals	Incineration parameters, (heat value, organic chlorine, and ash content)	a	Table 4.2-4
Aqueous wastes	Incineration parameters, (heat value, organic chlorine, and ash content)	a	Table 4.2-4
Sludges	Incineration parameters, (heat value, organic chlorine, and ash content)	a	Table 4.2-4
Solids	Organic chlorine	a	Table 4.2-4
New unknown, and process change wastes	Ignitability, reactivity, EP toxicity, corrosivity, heat value, organic, chlorine, and ash content	Performed on each drum, drum lots of some wastes, or tank truck	Note b

[a] Analysis of waste in storage tanks will be conducted whenever a new blend is made. Additionally, waste in the feed tanks will be analyzed when the feed tanks receive a mixture of blend waste or they receive a new waste. Direct burn tank trucks will be sampled and analyzed each batch.

[b] The selection of the appropriate parameters to be analyzed for the new, unknown, and process change wastes will be based on process knowledge.

Source: RCRA Part B Permit Application (revised May 1986)

significantly, these minimum frequencies are to continue as long as there are no process changes.[1]

The Toxic Substances Control Act (TSCA) Incinerator was designed to thermally destroy low-level radioactively contaminated Polychlorinated Biphenyls (PCB) and other hazardous organic waste. In September 1986, a document entitled "Waste Acceptance Plan and Analytical Protocol for the Toxic Substances Control Act Incinerator" was written and issued to seven Oak Ridge Operations customers to help identify the types, quantities, and constituents of the wastes that would be accepted. This document also served as a guide to the Environmental Protection Agency (EPA) to identify the radionuclides in the waste that could potentially be emitted out of the stack.

In addition to the Waste Acceptance Plan, a document entitled "National Emission Standard for Hazardous Air Pollutants (NESHAP) Compliance and Verification Plan for the Toxic Substances Control Act Incinerator" was written to determine the health impacts that would result from emitting the radionuclides that were identified in the waste characterization. These radionuclides were modeled using AIRDOSE-EPA to determine the overall dose to the public and have been documented to the EPA. Therefore, any radionuclides not already identified have not been modeled to determine the health impacts and cannot be burned in the TSCA Incinerator.

Recently, some concern was expressed that transuranic (TRU) waste was not addressed in the waste acceptance criteria. Based on what was reported by each waste generator, no TRU waste was identified although there is reason to believe that TRU wastes (specifically neptunium [Np] and plutonium [Pu]) have existed. Therefore, wastes which contain Np and Pu or any other radionuclides in detectable quantities not already identified in

the waste acceptance criteria cannot be burned in the incinerator.

In order to ensure NESHAP compliance that no other radionuclides other than those already characterized can be incinerated, the following actions were taken in January 1987:

1. requesting from each of the seven customers any known data that they have for Np or Pu in their waste streams to be incinerated,
2. if no data exist, a random sampling must be done to verify the absence/presence of Np, Pu, or any other suspected radionuclides not previously identified and documented, and
3. amending the Waste Acceptance Plan to define more clearly that other radionuclides will not be accepted, and that a statistical sampling of all waste shipments to the incinerator will be analyzed for other radionuclides.

Recently continuous sampling systems were provided at the stack to ensure NESHAP compliance with emission requirements.

4.2.4 Waste Characteristics and Annual Feed Rates

Report K/HS-21 contains details on the type and quantity of waste feed material characterized for the incineration facility,[2] and only summaries are presented here.

Table 4.2-6 contains a list of the major categories, the estimated annual feed/burn rates, and the weighted averages of selected physical and chemical parameters of the wastes.

Table 4.2-7 identifies the annual feed for each category stream and lists the estimated annual burn rates and the weighted average chemical analysis for each major elemental contaminant that was used to design the TSCA incinerator.

Table 4.2-8 presents data on uranium contamination that might be expected in some waste streams.

Table 4.2-6. Waste characterization summary - major parameters[a]

Primary Master Burner	Annual Burn Rate (Gallons)	Average Heat of Combustion (Btu/lb)	% Ash	% Chloride	% Fluoride	% H_2O	Density (g/ml)	Kinematic Viscosity (cSt)
PCBs								
Concentrated Waste	20,000	8,800	2.0	40.0	0	1	1.55	15.0
Dilute Waste	115,000	15,600	.9	7.0	0	10.7	.99	1.6
Subtotal or Weighted Average	135,000	14,000	1.06	12.6	0	9.3	1.07	2.5
Non-PCB Oil	274,000	14,700	.9	.06	0	15.9	.89	3.3
Solvents & Chemicals	64,000	4,000	1.0	50	2.3	31.5	1.27	1.3
Total or Weighted Average	473,000 (1.08 gal/min)	13,200	.96	18.0	.3	16.1	.99	2.7
Aqueous Burner	81,000 (.18 gal/min)	1,200	4.0	.04	0	86.0	.99	--
Secondary Burner								
Non-PCB Waste Oils	84,000	17,900	.3	.2	0	1.05	.97	30
Solvents & Chemicals	87,000	14,500	.10	.8	.004	4.95	.93	2.2
Total or Weighted Average	171,000 (.40 gal/min)	16,100	.2	.50	.002	3	.95	10^{**}
Solids								
Shredder	855,000 lb	5,100	50	6.7	0	21	N/A	--
Bulk Solids	6,722,000 lb	130	59	0	0	22	.94	--
Total or Weighted Average	7,587,000 lb (1,039 lb/hr.)*	690	58	.76	0	22		
Lance (Sludges)	220,000 lb (30 lb/hr.)	5,100	10	0	0	65	1.03	227

*Burn rate will be limited to 700 lb/hr.
**Liquid waste worst case design viscosity shall be 100 CP.

[a]Parameters are shown to illustrate the type of material that is processed. See also Table 4-2-3.

Table 4.2-7. Waste characterization summary - elemental contaminants[a]

Primary Master Burner	Annual Burn Rate (Gallons)	P PPM	S PPM	Al PPM	Cd PPM	Cr PPM	Fe PPM	K PPM	Li PPM	Na PPM	Pb PPM	Cu PPM	Si PPM	Mg PPM	Mn PPM	Ni PPM	Ti PPM	Zn PPM
PCBs																		
Concentrated Waste	20,000	N/A	10	1500	240	20	40	2000	100	200	40	20	40	30	3	7	7	70
Dilute Waste	115,000	N/A	3064	56	.8	8.6	420	122	81	11900	37	25	54	360	11	10	124	682
Subtotal or Weighted Average	135,000	N/A	3294	269	36	10	364	400	84	10171	38	24	52	311	9.8	16	107	592
Non-PCB Oil	274,000	119	6152	68	8	6	448	63	47	12357	2621	18	34	272	16	22	102	487
Solvents & Chemicals	64,000	N/A	795	606	0	74	595	196	151	138	7.5	16	143	24	5	3	9	558
Total or Weighted Average	473,000 (1.08 gal/min)	N/A	4612	198	10.3	16	444	177	72	10085	1538	19	54	250	13	18	91	527
Aqueous Burner	81,000 (.18 gal/min)	N/A	N/A	485	13	6.5	1567	574	44	1883	5.7	36	1038	119	40	5.4	17.5	43
Secondary Burner																		
Non-PCB Waste Oils	84,000	143	4745	440	.7	36	736	547	100	9609	62	24	104	49	18	40	99.5	94
Solvents & Chemicals	87,000	N/A	N/A	1446	.1	786	4928	1121	.4	112	22	9	107	69	3.2	91	3.1	47
Total or Weighted Average	171,000 (.40 gal/min)	N/A	N/A	954	.4	420	2880	841	49	4752	42	16	105	59	10	66	50	70
Solids																		
Shredder	855,000 lb																	
Bulk Solids	6,727,000 lb																	
Total or Weighted Average	7,582,000 lb (1,039 lb/hr)*	--	--	--	--	--	--	--	--	--	--	--	--	--	--	--	--	--
Lance (Sludges)	220,000 lb (30 lb/hr)	N/A	N/A	49160	2038	2314	27079	9024	10243	29325	399	14311	36450	2046	1131	1493	2362	801

*Burn rate will be limited to 700 lb/hr.

[a]Figures are shown to illustrate the type of material that is processed.

Table 4.2-8. Waste characterization summary - uranium contaminants

Waste Stream	Plant	Approximate Uranium Content[a,b] ppm by weight
Degreaser Sludge	K-25	13000
Degreaser Sludge	GAT	1900
Refrigerants	K-25	11
Solvents & Chemicals	K-25	1.6
Hydroform Oil	Y-12	8
Mineral Oil	GAT	4.4
Machine Coolants	Y-12	240
Chlorinated Solvents	K-25	1.8
Waste Oils	K-25/Y-12	14
Coolants/Cutting Oils	K-25	7

[a]Source: K/HS-21 (Does not include all the streams such as those from Paducah and Fernald)

[b]If the 235_U assay of the uranium is one percent or greater, the uranium content must be less than 5 ppm to meet acceptance criteria.

All biological waste generated in laboratories at the ORNL Biology Division is steam (autoclaved) sterilized before it is placed in the dumpsters for disposal. Autoclaving destroys the microbiological (bacteria, fungi, virus) content of the biological waste. Research using viruses is conducted in only four laboratories. The division purchases less than three curies of low-level isotope each year. The majority consists of ^{3}H, ^{32}P, ^{14}C, ^{125}I, and ^{131}I. Low-level isotope waste is collected in containers at appropriately placed waste stations throughout the division. Waste is separated as to its form (liquid, dry solid, scintillation). Biological material that has been labelled will be placed in one of the containers. Biological waste also includes animal carcasses and animal bedding. Animal carcasses (rats, mice, rabbits) will be delivered to the TSCA site in 25 lb containers and the containers will be fed manually to the incinerator through the package drop. The carcasses will be stored temporarily at the TSCA site in a biological freezer before being scheduled and fed to the incinerator. Animal bedding will be delivered in bins and unloaded into the bulk solids hopper. The animal bedding will be fed to the incinerator via the bulk solid feed system and the ram feeder.

4.2.5 Design Basis and Heat and Material Balance

The design basis and the heat and material balance are summarized below.

4.2.5.1 Design Basis

The incineration facility has been designed to comply strictly with the performance criteria and other design requirements included in the procurement specification (K/D-5552, Rev. B).[3] The parameters defining performance and major process-related design requirements are detailed in the specification. Table 4.2-9 summarizes the waste flows required for burning any combination of wastes and the related heat value for each stream used in the design.

Table 4.2-9. Design waste loads for the incineration facility

Waste Stream	Maximum Rate	Design Heat Value (Btu/lb)
Liquid waste to primary combustion chamber (kiln) burner	1.8 gal/min or 900 lb/hr	7,000
Liquid waste to secondary combustion chamber burner	1.0 gal/min or 600 lb/hr	10,000
Aqueous waste to kiln	1.0 gal/min or 500 lb/hr	1,200
Sludge to kiln	600 lb/hr	5,100
Solids to kiln	1000 lb/hr	600

Auxiliary fuel usage is minimized by optimizing the waste blending to meet certain physical and chemical constraints. The kiln and secondary combustion chamber will normally require auxiliary fuel.

However, maximum design conditions for the gas flow, as well as for the process gas cleaning train, occur by combining all the wastes at the maximum rates presented in Table 4.2-9. The design loading condition for sizing the major process components, therefore, includes these design waste loads and the required auxiliary fuel. Ancillary components are designed on the basis of related critical design conditions. For example, the sizing of the burner system is based on fuel requirements with no waste loads so that the incineration system can be heated to, and maintained at, regulatory temperatures by using only the auxiliary fuel (natural gas or No. 2 fuel oil).

The incineration system can be operated over a range of waste-firing thermal capacities. The normal waste-firing thermal capacity of 10 to 15 x 10^6 Btu/hr and the maximum thermal capacity of 30 x 10^6 Btu/hr are within the design loading condition dictated by maximum waste load requirements and the environmental permits.

4.2.5.2 Heat and Material Balance

Auxiliary fuel requirements, have been determined in consideration of waste loads, as well as heat losses, related to the selected refractory system. Heat losses are less than 10 percent. The oxygen content on a dry volume basis is greater than 3 percent in the stack as is required by TSCA regulations. Maximum auxiliary fuel requirements occur under zero waste load and cold conditions during start-up. Burners in the rotary kiln and in the secondary combustion chamber burn No. 2 fuel oil or

natural gas as required to maintain required temperatures. The secondary auxiliary fuel requirement is approximately 1.5 gpm of oil or natural gas for the same purpose. Included in Section 4.3 are details related to the burner systems and to the method of introducing supplemental fuel.

References for Section 4.2

1. RCRA Part B Permit Application for K-1435 PCB/Hazardous Waste Incinerator , Martin Marietta Energy Systems, Inc., Oak Ridge, Tennessee, April 1985 and May 1986 revisions.

2. Waste Feed Characterization for Compliance with Toxic Substances Control Act (TSCA) Incinerator, K/HS-21, Union Carbide Corporation, Nuclear Division, Oak Ridge, Tennessee, February 1984.

3. Procurement Specification for the Feed, Incineration and Off-Gas Treatment Systems, K/D-5552, Rev. B, Martin Marietta Energy Systems, Inc., Oak Ridge, Tennessee, August 1, 1985.

4.3 Process Description

This section reflects the findings of Section 5, Accident Analysis, in that if the release of hazardous materials can present excessive consequences to the health and safety of the public and of the employees, features are incorporated in the K-1435 design to prevent accidents or to reduce the accident consequences. Descriptions are in sufficient detail to indicate that the design is adequate to control the hazards defined in Section 5. Consideration is given to the hazardous materials involved and the manner of containing the materials.

In general, the K-1435 Incineration Facility is designed to burn a wide range of wastes, as characterized in Section 4.2, including liquids, aqueous wastes, sludge, and solids, and to dispose of incinerator-generated wastes. Solid materials (primarily PCB contaminated soils less than 500 ppm PCB) are handled and fed in bulk form and in metal containers. Containers are dumped, shredded, and all waste components are fed to the incinerator. Container deheading and shredding are accomplished automatically in controlled environments using air sweeps and nitrogen blankets. A hydraulic ram feeds bulk and shredded solids to the rotary kiln. Sludges and aqueous waste are injected into the kiln through nozzles and lances. High heat-of-combustion liquids are burned in either the kiln or a secondary chamber with dual-fuel (gas/liquid) burners. Ash residue from the wet ash removal system is collected and disposed of through existing radioactive waste disposal facilities within the DOE Oak Ridge Reservation. Kiln off-gas flows to a secondary combustion chamber where, along with liquid wastes and/or auxiliary fuel injected at this point, they are subjected to temperatures of not less than 2200°F* for four seconds**.

---

* The specific temperature is related to the TSCA permit.

** The regulatory agency required time is two seconds.

The off-gas from the secondary combustion chamber then passes through a four-stage treatment system including a quench chamber and scrubber treatment system for cooling and removal of particulates and some combustion by-products. Final flue gases are forced by an induced-draft fan through the stack. Liquid wastes generated by the scrubber systems are treated in the existing ORGDP facilities (K-1407A neutralization facility, K-1407B pond, or K-1407H Central Neutralization Facility). Solid waste as scrubber sludge is collected in drums and recycled back to the incinerator feed system.

The incineration facility consists of seven major processes/systems:

- Receiving and Sorting
- Process Storage
- Feed Preparation
- Waste Feed Systems
- Incineration Systems
- Process Gas Cleaning System
- Effluent Management for Liquids/Solids

These processes/systems are described in operating sequence, as shown in Figure 4.3-1. A simplified process flow diagram is shown in Figure 4.3-2, Sheets 1 and 2. The safety-related systems/features that are incorporated in the design are described in Section 4.4, Operational and Control Features, to permit an independent evaluation of the adequacy of design.

4.3.1 Receiving and Sorting

The receiving and sorting area in K-1435C allows proper handling and receiving of waste from the waste-generating sites and allows proper identification, sorting, and delivery of the waste to the appropriate process storage area. In addition to wastes, raw materials for plant operation and maintenance are handled in the receiving area.

Materials received include the following:

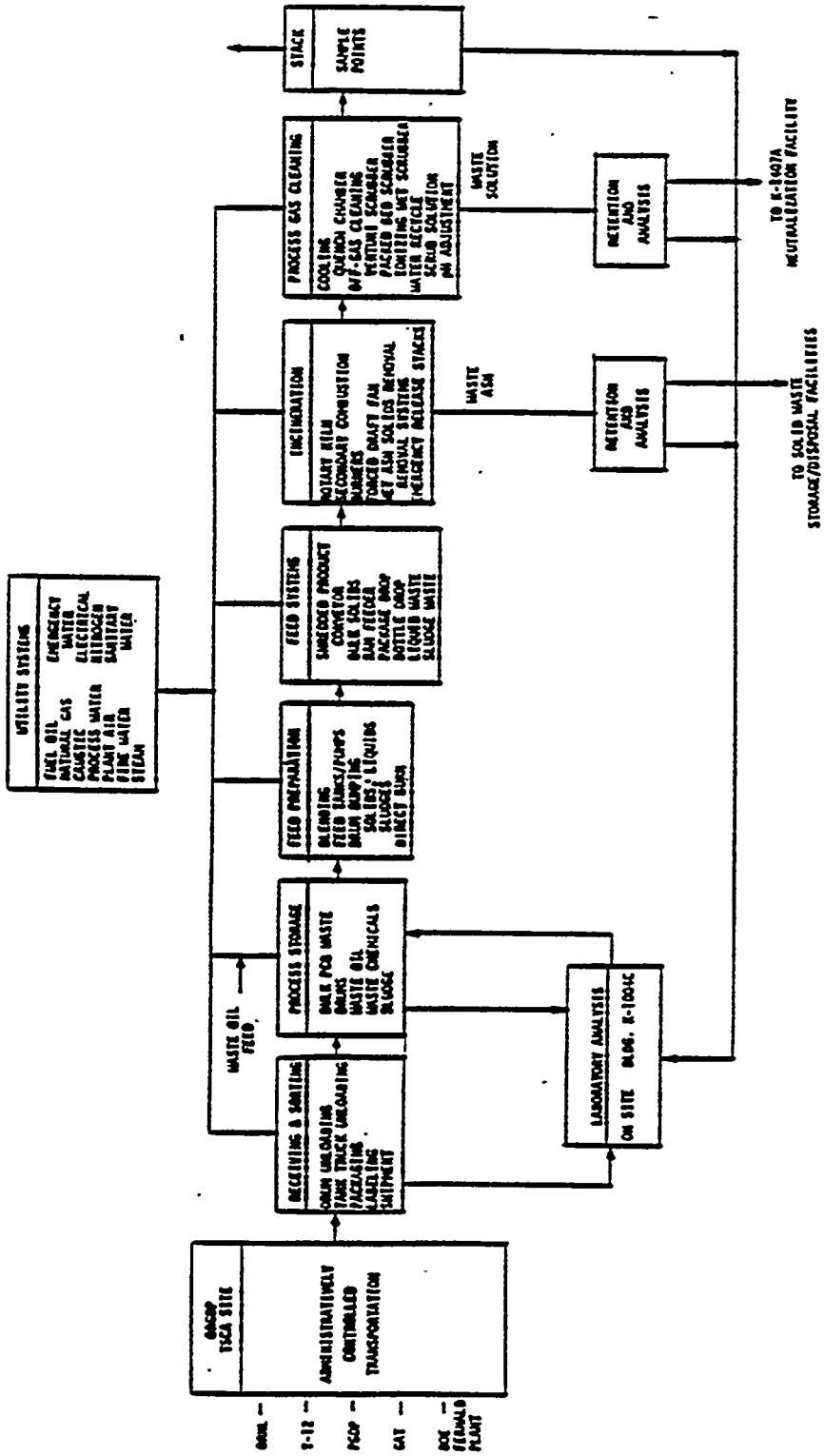

Figure 4.3-1. Block flow diagram for K-1435 incineration facility

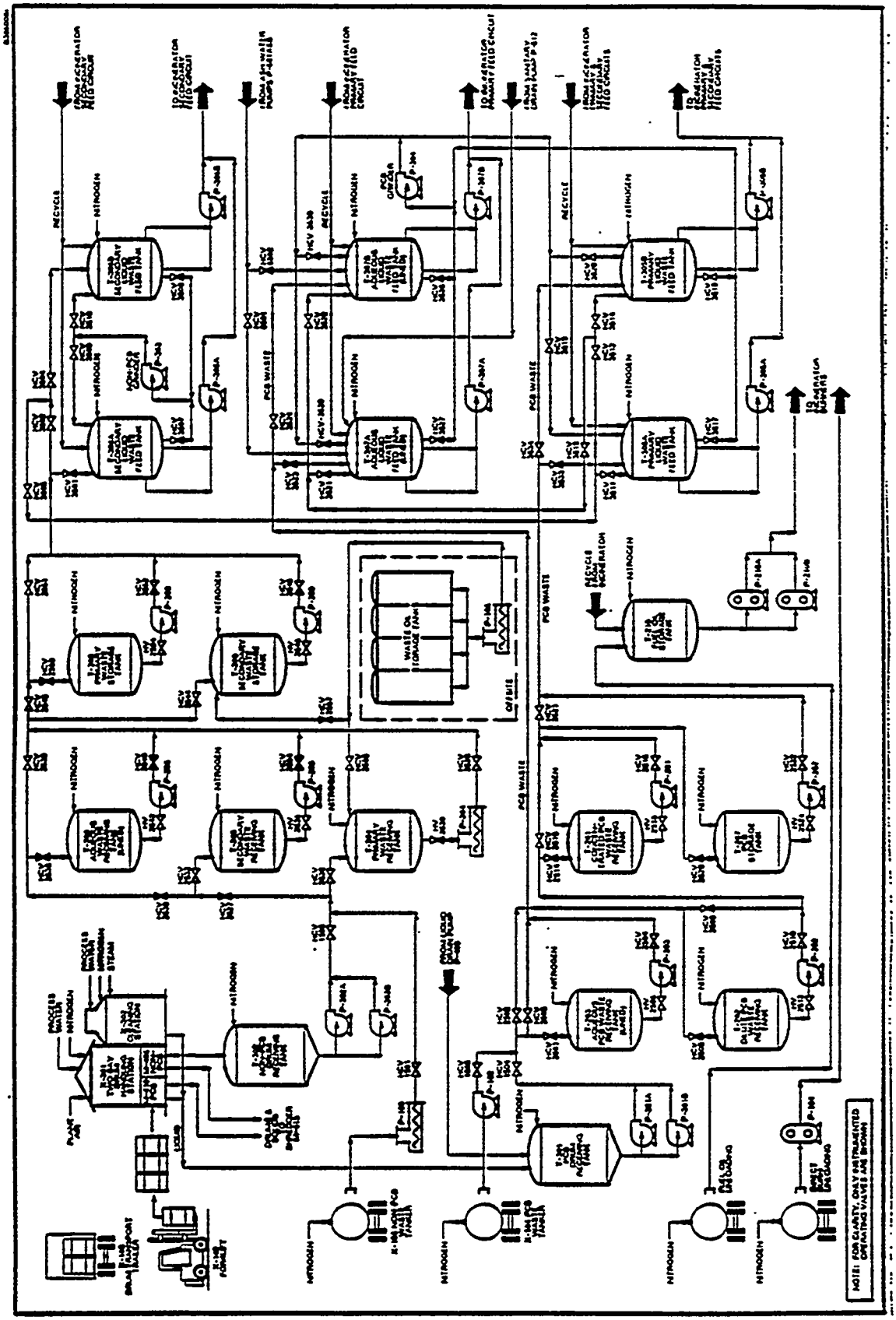

Figure 4.3-2. Simplified process flow diagram for K-1435 incineration facility (sheet 1 of 2)

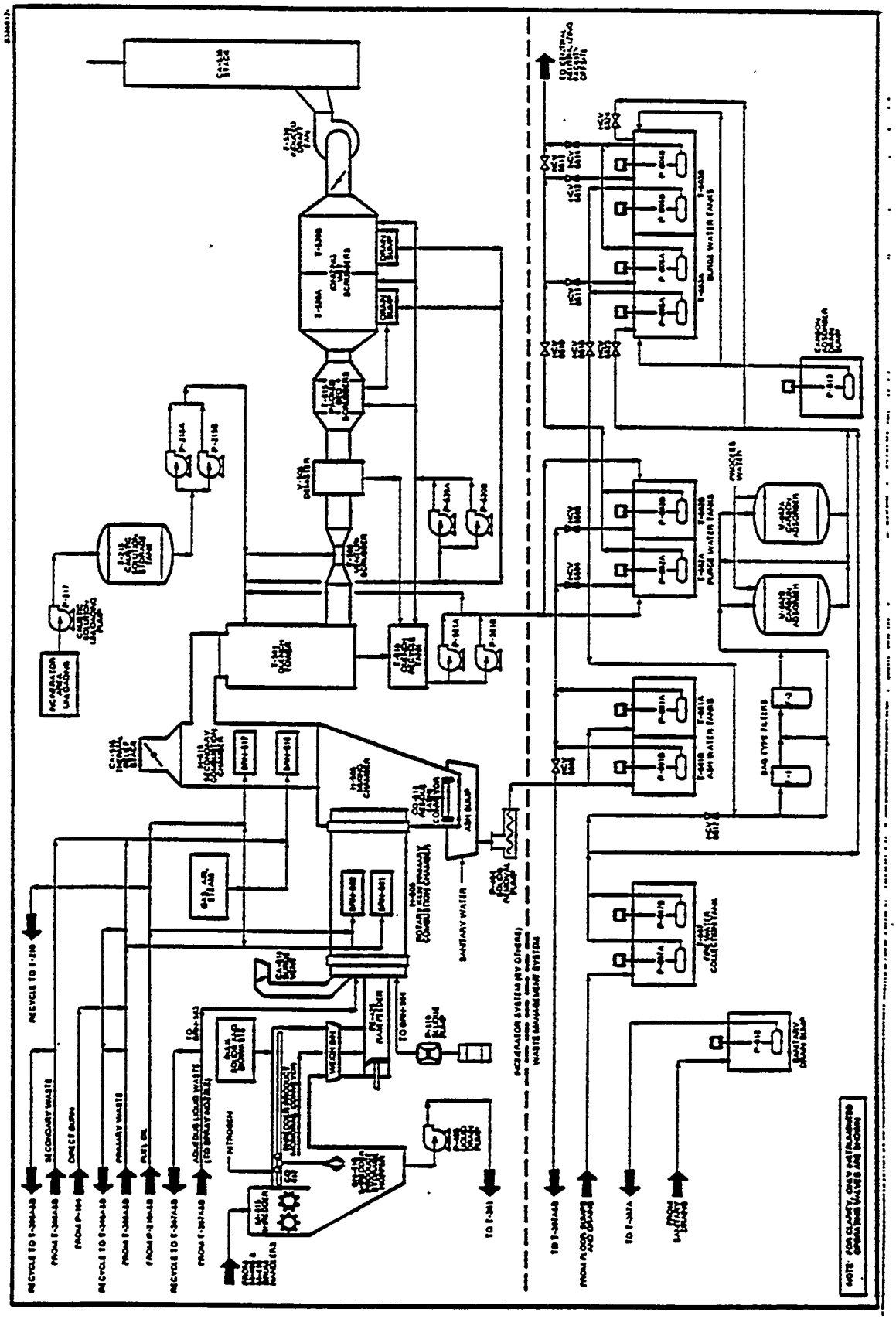

Figure 4.3-2. Simplified process flow diagram for K-1435 incineration facility (sheet 2 of 2)

- PCB-contaminated wastes (liquid and solid), with or without uranium
- Hazardous organic wastes (liquid and solid), with or without uranium
- Direct burn materials (reactive or noncompatible liquids or oils pumped directly to the kiln)
- Fuel oil
- Caustic solution for use in the off-gas scrubbers

The liquid and solid wastes, as characterized in Section 4.2, are received from several DOE sites. Material arrives in DOT-approved drums, in a drum transport trailer, or as bulk liquid waste in a tanker trailer.

The drums are received in the drum transport trailer (X-103) at the truck unloading station. This trailer is a 40-foot enclosure van semi-trailer for drummed solids transport to meet the requirements of the Code of Federal Regulation 49 CFR 393. Two electric-powered forklift trucks (X-102A and X-102B) are provided for unloading the drums. The trucks are suitable for use in a Class I, Division II, Group D area as designated by the National Electrical Code. The forklift works in conjunction with a dock leveler. Normally, four drums (one pallet) are unloaded at a time and transferred to the designated storage area.

In addition to the normal forklift method, a 3-ton hoist system in the tank farm area is suitable for operation in a Class I, Division II, Group D environment, and the mechanical and electrical components are of non-sparking and/or ignition-proof design. The hoisting cable has a minimum safety factor of 5 with respect to the cable manufacturer's published breaking strength. The hoist has a capacity limiter to prevent lifting loads that exceed design capacity.

In the storage area, the contents of the drums are checked for agreement with the shipping manifest. Waste samples can be taken to the laboratory in Control Building K-1435A for waste verification tests. These tests verify the composition of the waste and determine the amount of PCBs received at the facility as required by the pertinent Code of Federal Regulations.

In the event a container of waste received for storage is incompatible with other wastes, the container is segregated or shipped off-site. Incompatible wastes are placed only in containers that are suitable for storage, and the containers must be clean and free of any residual wastes.

After verification of agreement with the shipping manifest and after a check to ensure they are sealed and labeled, the drums are then sorted and stored on wooden pallets. Drums containing PCB-contaminated wastes must be stored in the K-1435B PCB drum storage area, while drums containing non-PCB wastes must be moved to the K-1435C storage area. The pallets elevate the drums above the floor to minimize contact with leaks or spills and are adequately spaced to allow inspection for leaking, damaged, or corroding drums. Drums are not to be stacked over two high in either storage area. Each pallet can accommodate four drums. Space is provided for approximately 112 pallets in the K-1435B storage area and approximately 148 pallets in the K-1435C area. Thus, the estimated storage capacity for each area is approximately 352 55-gallon drums in K-1435B and approximately 496 55-gallon drums in K-1435C.

Containers/drums are compatible with the wastes contained; therefore, the most likely source of ignition is external to the containers. Except for certain areas in K-1435A, signs clearly marked "No Smoking," "No Open Flame," and "Danger-Unauthorized Personnel Keep Out" are posted. Cutting, welding, and other

operations are not permitted in areas where a potential ignition hazard exists unless a special work permit is issued. The permit requires that the atmosphere in these areas be tested for the presence of ignitable vapors and that proper fire-fighting equipment must be on hand. Vessels that could contain ignitable wastes are designed and constructed to minimize the risk of exposing the contents to sources of ignition.

The bulk liquid wastes are received at the truck unloading station X-101 in 4000-gallon-cargo tanker trailers (X-104 PCB tanker and X-105 non-PCB tanker). These trailers are standard design tankers for transporting bulk liquid waste fluids and meet the requirements of pertinent Code of Federal Regulations.

Before a tanker containing bulk liquid waste is unloaded, the shipping manifest is verified. Waste samples from the tanker and appropriate designation tank are taken to K-1435A analytical laboratory for content analysis, for chemical compatibility blending, and for reactivity testing. If the laboratory results indicate that the contents can be mixed safely, the transfer is authorized using the computer system for communication. Depending on the characteristics, the bulk liquid waste is then pumped into the appropriate receiving, storage, or feed tank, as described in Section 4.3.2.

The PCB truck unloading pump (P-102) is used to transfer the PCB-contaminated liquids through the respective strainer to any one of eight PCB-designated tanks in the K-1435C storage area:

- Concentrated PCB Waste Receiving Tank (T-201)
- Dilute PCB Waste Receiving Tank (T-202)
- Aqueous PCB Waste Receiving Tank (T-203)
- PCB Storage Tank (T-207)

- Primary Liquid Waste Feed Tank (T-305A)
- Primary Liquid Waste Feed Tank (T-305B)
- Aqueous Liquid Waste Feed Tank (T-307A)
- Aqueous Liquid Waste Feed Tank (T-307B)

The non-PCB truck unloading pump (P-103) is used to transfer hazardous liquids other than PCB through the respective strainer to one of eleven tanks in the K-1435C storage area, including the primary and aqueous feed tanks that contain PCB material:

- Primary Waste Receiving Tank (T-204)
- Secondary Waste Receiving Tank (T-205)
- Aqueous Waste Receiving Tank (T-206)
- Primary Waste Storage Tank (T-208)
- Secondary Waste Storage Tank (T-209)
- Primary Liquid Waste Feed Tank (T-305A)
- Primary Liquid Waste Feed Tank (T-305B)
- Secondary Liquid Waste Feed Tank (T-306A)
- Secondary Liquid Waste Feed Tank (T-306B)
- Aqueous Liquid Waste Feed Tank (T-307A)
- Aqueous Liquid Waste Feed Tank (T-307B)

Section 4.4.1 discusses the instrumentation and controls for the various process tanks.

Alternately, the liquid wastes may be transferred using the direct-burn pump (P-104) through the strainer (S-104) at up to 1 gpm directly from the bulk tanker to the feed header of the primary liquid waste burner (BRN-501) or to the feed header of the secondary liquid waste burner (BRN-516) of the incineration systems described in Section 4.3.5.

Aqueous wastes are received and sorted similarly and are transferred to receiving and feed tanks.

In addition to wastes, fuel oil and 50-percent caustic are received. The truck-mounted unloading pump transfers fuel oil to the fuel oil tank (T-210) in the K-1435C area. The 50-percent caustic is transferred to the caustic solution storage tank (T-215) in the K-1435D area.

4.3.2 Process Storage

The process storage area in K-1435C provides EPA-approved storage facilities for liquid PCB-contaminated wastes, waste oils, waste chemicals, waste solvents, and sludges. This area is part of the tank farm discussed in Section 4.1.2, which structurally describes the waste holding tanks. Eleven tanks comprise the process storage, including the six receiving tanks and the three storage tanks:

- Concentrated PCB waste receiving tank (T-201)
- Dilute PCB waste receiving tank (T-202)
- Aqueous PCB waste receiving tank (T-203)
- Primary waste receiving tank (T-204)
- Secondary waste receiving tank (T-205)
- Aqueous waste receiving tank (T-206)
- PCB storage tank (T-207)
- Primary waste storage tank (T-208)
- Secondary waste storage tank (T-209)
- Fuel oil tank (T-210)
- Caustic solution storage tank (T-215)

Table 4.3-1 lists the content, capacity, and dimensions for each receiving and storage tank in the process storage area and also for the waste feed tanks (T-305, T-306, and T-307) in the tank farm area and the waste drain tanks (T-301 and T-302) in the drum shredder area. Each tank is dedicated to a specific category of waste, as indicated, but the exact composition of waste in the tank varies because of blending efforts to obtain

Table 4.3-1. Contents, capacities, and dimensions for the K-1435 tanks

Tank No.[a]	Tank Contents	Capacity (gal)	Height (T/T)[b] (ft/in)	Diam. (ft/in)
T-201	Concentrated PCB wastes	5,000	11-0	8-6
T-202	Dilute PCB wastes	5,000	11-0	8-6
T-203	Aqueous PCB wastes	5,000	11-0	8-6
T-204	Non-PCB liquid wastes (Primary)[c]	5,000	11-0	8-6
T-205	Non-PCB liquid wastes (Secondary)[d]	5,000	11-0	8-6
T-206	Non-PCB Aqueous wastes	5,000	11-0	8-6
T-207	PCB liquid wastes	10,000	9-0	13-0
T-208	Non-PCB liquid wastes (Primary)	10,000	9-0	13-0
T-209	Non-PCB liquid wastes (Secondary)	10,000	9-0	13-0
T-305A	PCB liquid wastes (Primary)	5,000	11-0	8-6
T-305B	PCB liquid wastes (Primary)	5,000	11-0	8-6
T-306A	Non-PCB liquid wastes (Secondary)	5,000	11-0	8-6
T-306B	Non-PCB liquid wastes (Secondary)	5,000	11-0	8-6
T-307A	PCB aqueous wastes	5,000	11-0	8-6
T-307B	PCB aqueous wastes	5,000	11-0	8-6
T-301	Non-PCB liquid drain wastes	900	6-9	5-0
T-302	PCB liquid drain wastes	900	6-9	5-0

[a] Specific gravity range for each tank is 0.9-1.6.

[b] T/T indicates dimensions given tangent to tangent.

[c] Primary indicates the wastes are to be fed to the incinerator primary combustion chamber.

[d] Secondary indicates the wastes are to be fed to the incinerator secondary combustion chamber.

optimum feed compositions. Therefore, the maximum expected specific gravities are reported. Before waste is transferred to a tank, the proper waste category is determined to ensure compatibility with the other materials in the tank. Each receiving tank has the capacity (5,000 gallons) to hold a full load from a tanker (4,000 gallons). The six receiving tanks provide additional inventory for segregating, checking, and storing liquid wastes. The three storage tanks (T-207, T-208, and T-209) provide additional blending and storage capabilities.

Wastes containing PCBs are stored separately from those without PCBs in the process storage area. The functions of the eleven process storage tanks are described below.

The concentrated PCB waste receiving tank (T-201) receives PCB transformer fluids and wastes containing greater than 500 ppm PCB. The concentrated PCB waste receiving tank pump (P-201) transfers small quantities of PCB-concentrated material either to the PCB storage tank (T-207) or to the primary liquid waste feed tank (T-305) to formulate dilute PCB blends. The aqueous PCB waste receiving tank pump (P-203) transfers PCB-contaminated aqueous wastes in the aqueous PCB waste receiving tank (T-203) to the aqueous waste liquid feed tank (T-307). PCB-contaminated wastes are transferred to the primary and aqueous waste liquid feed tanks in different piping headers from those used for non-PCB-contaminated wastes.

The three non-PCB waste receiving tanks (T-204, T-205, and T-206) are designated for primary, secondary, and aqueous wastes. However, the piping headers allow each tank to be used for any of the three categories; this arrangement permits system flexibility in receiving, sorting, and blending non-PCB wastes. A piping header allows the respective pumps of these non-PCB receiving tanks to transfer their contents to the primary waste storage

tank (T-208), to the secondary waste storage tank (T-209), or to the appropriate primary, secondary, and aqueous waste feed tanks (T-305, T-306, and T-307).

The PCB storage tank (T-207) provides additional capacity for diluting concentrated PCB wastes and provides, along with the receiving tanks, over one year of storage capacity for PCB-contaminated wastes. The PCB storage tank pump (P-207) transfers the tank content to the primary liquid waste feed tank (T-305), which is part of feed preparation discussed in Section 4.3.3.

The two non-PCB primary and secondary waste storage tanks (T-208 and T-209) provide one month's storage capability for the non-PCB wastes. The associated tank pumps (P-208 and P-209) transfer the contents of these storage tanks to the primary and secondary waste feed tanks (T-305 and T-306).

The location of all waste storage tanks complies with the separation distance requirements for stable liquids (operating pressure 2.5 psig or less) contained in NFPA "Flammable and Combustible Liquids Code" for tanks with emergency relief venting. Each waste storage tank has a nitrogen blanket, a pressure/vacuum relief system with flame arrester, and a rupture disc. The nitrogen blanket maintains a tank operating pressure of 3 inches of water column (w.c.). The relief valve has a pressure setting of 9 inches w.c. and a vacuum setting of 2 inches w.c. The rupture disc has a pressure setting of 10 psig and a vacuum setting of 6 inches w.c. All tanks are capable of handling EP toxic, ignitable, and toxic wastes. Tanks T-203, T-206, T-307A, and T-307B are also capable of handling corrosives such as slightly acidic chlorinated aqueous mixtures.

The fuel oil tank (T-210) in the process storage area receives and stores No. 2 fuel oil. Fuel oil is clean fuel for starting and shutting down the incinerator combustion system and can be used as an auxiliary fuel to provide additional heat

input, if necessary, into the combustion system. The fuel oil pumps (P-210A and P-210B) are used to feed fuel oil to a burner mounted on the face plate of the rotary kiln and to a burner mounted at the secondary combustion chamber.

The caustic solution storage tank (T-215) in the incinerator diked area receives and stores 7,500 gallons of 50 percent caustic (NaOH) solution pumped from a transport tank truck. The caustic solution unloading pump (P-217) is used to transfer the caustic at 100 gpm to the storage tank for later transfer to the process gas cleaning area.

4.3.3 Feed Preparation

After process storage, the drummed waste is transported to the feed preparation area in Building K-1435B by the X-102 forklift truck and prepared for incineration. Feed preparation includes (1) liquid waste blending, (2) the drum handling system, and (3) the shredder system.

4.3.3.1 Liquid Waste Blending

A key operation for feed preparation is liquid waste blending. The 5,000-gallon primary, secondary, and aqueous liquid waste feed tanks (T-305, T-306, and T-307) serve as the blending tanks. The blending of liquids through the receiving, storage, and then feed tank systems is based on verified sample analysis and/or shipping manifest data, which is entered, stored, and processed in a computer data base. Wastes for incineration are classified as primary or secondary according to their physical and chemical characteristics such as heat of combustion, composition, PCB content, viscosity, percent halogens, percent particulates, and handling characteristics as previously discussed in Section 4.2. For instance, non-PCB liquids with a heat of combustion greater than or equal to 10,000 Btu/lb with

proper particulate composition are candidates for being fired directly to the secondary combustion chamber.

All receiving/storage tanks in the K-1435C area are agitated and blending/mixing is accomplished in each. Final blending is achieved in the six agitated feed tanks.

For each burner feed material, two feed tanks are in a parallel flow arrangement, which is described in Section 4.3.4.6, that allows one tank mix to be prepared (verified by sampling/analysis) while the other is in on-line operation. The feed tank, as are tank farm flow circuits, are designed either PCB, non-PCB, or aqueous (contains PCBs).

4.3.3.2 Drum Handling System

The second major operation for feed preparation is the drum handling system (M-400), as shown in Figure 4.3-3. This system receives, transports, opens, and dumps drums and forwards all solid waste materials, including the drum, to the shredder feed hopper. The drum handling system includes one enclosure, two drum handling units, and two local control panels. Two liquid drain tanks are provided in the K-1435D area to collect the liquid wastes from each respective drum handling unit.

The drum handling system enclosure has one basic compartment and has the following general features:

- Steel structure within Building K-1435B and not subject to wind load. The structural steel enclosure and bridge crane support columns are anchored to cast-in-place concrete.
- Manual access door to allow passage of 48-inch by 48-inch by 6-inch wooden pallets, fiberpacks, and other refuse materials through the enclosure wall and

directly into the shredder feed hopper. Interlocks preclude access while shredder is energized.

- Steam jet nozzle access throughout for cleaning accumulated residue.
- Glove box and observation window for each drum processing unit.
- Through-wall gasketed sleeves or other gas tight connections for air, nitrogen, hydraulic and steam lines, instrumentation, and power (for lighting only) and control wiring.
- Ventilation (air sweep) system for the drum handling enclosure, as described in Section 4.4.3.
- Oxygen monitoring system, as described in Section 4.4.1.
- Fire and explosion protection and detection controls, as described in Section 4.4.7.
- Blowout panels, as described in 4.4.7.

The drum handling system includes two independent, similar drum handling units in the two separate drum dumper compartments. One drum handling unit (M-410) is dedicated to processing PCB-contaminated drums; the other (M-405), to non-PCB drums. The non-PCB materials primarily consist of waste organic solvents and other aqueous solutions. Otherwise, the two drum handling units are similar in all respects. The major components and subassemblies are as follows:

- Roller conveyor
- Drum lifter/dumper
- Drum deheader with shroud
- Perforated drain container
- Drum dump tilt mechanism (air actuated)

The roller conveyor for receiving the steel drums is approximately 3 feet wide by 10 feet long. Rollers have a minimum 6-inch diameter with maximum spacing equal to 1.5 times

diameter and have a non-sparking wear and impact-resistant surface. Rollers are mounted in a structural frame and powered by an air-actuated drive controlled by the operator from the local control panel.

The drum lifter/dumper is mounted on a vertical lifting mast that is carried by a hydraulic-powered bridge crane.

The drum deheader is self-propelled. It has a self-tightening cutting wheel with non-sparking cutters and explosion-proof drive. The deheader is attached to the drum by the operator through a glove box on the enclosure.

The drum deheader shroud is fitted with a piping and nozzle arrangement to direct jets of nitrogen (from the hydraulic actuator) onto the cutting blades of the drum deheader.

A perforated drain container, constructed of a non-sparking material, retains the non-drainable solids originally contained in the drum. This container, approximately 48 inches square by 12 inches deep, is attached to a tilting mechanism mounted to the floor, so it can be emptied into the incinerator feed system.

Two local control panels, one (M-405P) for the non-PCB drum handling unit and one (M-410P) for the PCB unit, are provided for the drum handling system. The control panels, together with instrumentation and sensing equipment, permit manual control of the drum handling units by use of panel-mounted pushbuttons, position indicators, and gauges. Electrical interlocks provide the following protection:

- The drum opener cutting action will begin with nitrogen being directed on the cutting blade.

- The drum dumper rotation device is inoperative unless the drum opener is in raised (retracted) position.
- The shredder cannot start, nor continue to run, if the manual access door to the shredder is open.

The drum handling system is designed to process three different sized drums: 30-gallon steel drums at 15 an hour, 55-gallon steel drums at 15 an hour (4 hours maximum), 85-gallon steel drums at 10 an hour, and 55-gallon fiberpak at 15 an hour. Induced draft fans provide the negative pressure and minimum gas velocities of 500 feet a minute at the exhaust louvers and drum access door. The drum handling area is ventilated with an air sweep system to maintain hazardous gas concentrations below 25 percent of their lower explosive limits, as described in Section 4.4.3. Vapors generated in the drum handling system enclosure are removed by a carbon canister, which is used to filter the air stream.

Table 4.3-2 lists the typical chemicals known to be encountered in the drum handling system.

The general description of the drum handling operation follows. From the local control panel, the operator controls all operations unless noted as automatic.

1. Drums are staged on two gravity roller conveyors with manual stops. The gravity roller conveyor feeds one drum at a time to the live roller conveyor which is activated by pushbuttons (forward/reverse/stop) on the control panel.

Table 4.3-2. Typical chemicals known to be encountered in the drum handling system.

Trichloroethylene	Askarel	Chloroform
Methanol	Beryllium Salts	Furfural Alcohol
Mineral Oil	Chlorinated Solvents	Acetonitrile
Waste Oil	Grease	Tributyl Phosphate
	Hydroform Oil	Dibutyl Carbitol
Perchloroethylene	Trioctyl Phosphine Oxide	
Trichloroethane	Hydraulic Oil	Calcium Salts
Pump Oil	Machine Oil	Biomass
Lube Oil	Freons (Refrigerants)	Nitrates
Radioactive Oil	Urethane	Aluminum Hydroxide
Synthetic Oil	Oil Base Coolants	
		Calcium Carbonates
	Toluene Diisocyanate	Neoprene
	Crystylic Acid	Lithium Carbonate
Acetone	Gasoline	Potassium Carbonate
	Triaryl Phosphate	PCB Congeners and Isomers
Methyl Ethyl Ketone	Ethylene Glycol	Chlorobenze Congeners and Isomers
Kerosene	Nitrosomorpholene	Oily Sludge
	Hexane	Oil
Paint Thinners	Xylene	Benzene
Paint Sludges	Carbitol	Ethanol
	Mineral Spirits	Pyridine
Alcohols		Carbon Tetrachloride
	Diethyl Ether	

2. All drum handling devices within enclosure are air or nitrogen operated.

   Drum deheader hoist, drum grabber hoist, drum dumper trolley/hoist, drum dumper tilt motor, and drum dumper clamping motor are air operated. The drum deheader operates off the plant nitrogen system.

   Each of the above devices is controlled with manual valves which are located above the control panel at each operating station.

3. The drum access doors, the drum deheader motor, the perforated drain containers (PDC), steam cleaning jets, and the shredder feed hopper door are also air operated. Each of these devices is operated by pushbutton actuated solenoid valves located on the control panel.

4. The solenoid-operated devices are interlocked to the exhaust fan to ensure safe operations.

5. The shredder, which is described in Section 4.3.3.3, is interlocked to the exhaust fan, conveyor doors, access doors, and oxygen analyzer to ensure safe operation.

6. Nitrogen supply is initiated by activation of shredder. Shredder starts after oxygen levels are satisfied.

7. Indicator lights are supplied to show shredder motor status, access door positions, and exhaust fan motor status.

Two liquid storage tanks, approximately 900 gallons each, located at the 801-foot elevation receive by gravity flow and

temporarily store liquids from the drums emptied by the drum handling units: non-PCB liquid waste drain tank (T-301) and PCB liquid waste drain tank (T-302). Tank T-301 receives non-PCB liquid wastes consisting primarily of waste organic solvents and other aqueous solutions. Tank T-302 receives PCB-contaminated oils from the drum handling system and also from the X-302 cleaning station (in K-1435B) and from the shredded waste hopper sump. Non-PCB and PCB transfer pumps (P-301A or B and P-302A or B) transfer the liquids to the appropriate receiving tanks in the tank farm area for subsequent incineration. Each drain tank is nitrogen blanketed above the contained liquid level and the tank effluents are carbon scrubbed. Each tank has a downcomer to ensure that a positive seal between the dump stations and the respective tank exists. One air-actuated valve for each drain line is also provided and operated from the local control panel. The tanks are vented in compliance with pertinent NFPA codes.

4.3.3.3 Shredder System

The third major operation for the feed preparation process is the shredder system used to process solid wastes. The shredder system receives, feeds, shreds, and discharges a variety of materials differing in size, shape, and composition. The shredding of solid wastes and the transport (to the kiln) systems are conducted in an oxygen-deficient (5 percent), nitrogen-enriched atmosphere to reduce appreciably the probability of an explosion or fire.

The shredder system consists of the shredder feed hopper, the shredder drive motor, the shredder, the shredder protection system, the local control panel, and the shredded waste hopper. Figure 4.3-4 shows the general arrangement and layout of the shredder system in relation to the drum handling system.

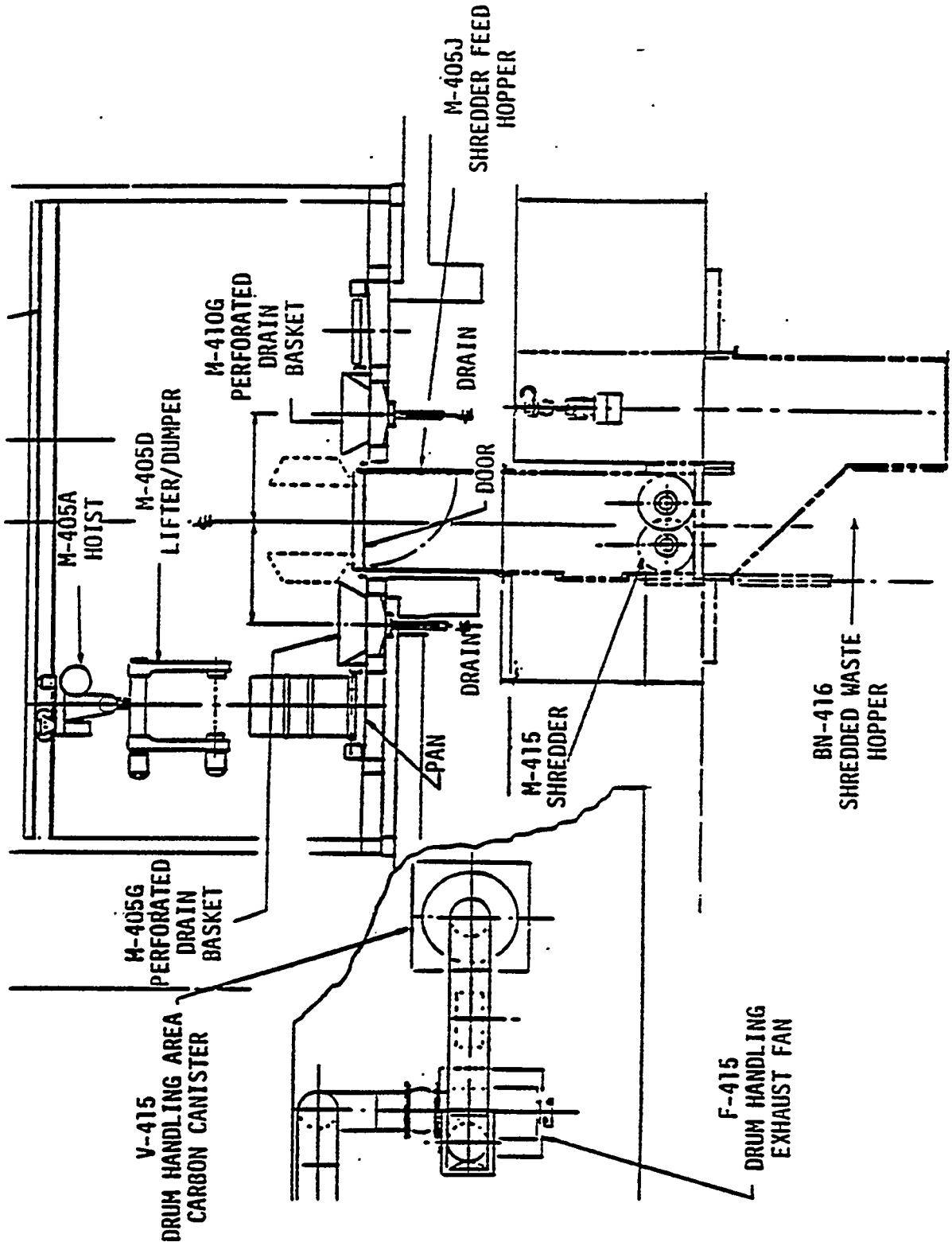

Figure 4.3-4. General arrangement and layout of shredder system

The shredder feed hopper is suitably sized to receive and discharge the waste materials into the shredder. The shredder feed hopper inlet door is interlocked with the shredder start circuit. The shredder feed hopper is maintained in an inert atmosphere while the shredder is in operation.

The shredder drive motors (M-415M) are twin 50-hp induction motors designed for continuous operation, and noise levels do not exceed 85 dBa at five feet or more from the motor perimeter.

The dual-electric-driven, high-torque shredder (M-415) is designed to operate 24 hours a day, 5 days a week. It reduces solid materials to a nominal 2-inch by 6-inch size or smaller. The strip length may vary, but is limited to assure proper discharge from the shredder and subsequent ease of handling. Shredded material is expected to have a bulk density in the order of approximately 60 lb/ft^3. Materials to be shredded include steel drums ranging in sizes from 30 gallons to 85 gallons each, together with separated lids and clamp rings, at a nominal rate of six units an hour. Residual liquids and sludges, consisting primarily of contaminated oils and waste organic solvents, may also be present. Miscellaneous materials to be fed, separately or in combination with steel drums, to the shredder include 55-gallon fiber pack drums, wooden pallets up to 48 inches by 48 inches by 6 inches, capacitor units, scrap metal, and such refuse as gloves, shoes, paper, plastic, and clothing. Operating noise level does not exceed 85 dBa, in keeping with federal regulations.

The shredder protection system, consisting of instrumentation, control, and automatic interlocks, interrupts normal operation whenever non-shreddable material is encountered and also when an oxygen-deficient atmosphere (less than or equal to 5 percent oxygen) is not present. The protection system performs the following functions:

1. Senses the presence of non-shreddable material via a high motor current measuring device.
2. Causes the shredder to stop and reverse rotation sufficiently to relieve the blockage, and reverses rotation again in a new attempt to shred the material.
3. Automatically repeats sequence cycle described in 2.
4. Causes an orderly shredder system shutdown should the blockage not be cleared in the maximum number of cycles, and sounds an equipment blockage alarm.
5. Detects oxygen levels greater than 5 percent and stops operation of the shredder.

Organic materials on the solid masses have sufficient surface area exposure to the incinerator temperature to effect proper destruction and removal efficiency (DRE). Any PCBs or hazardous organics on this shredded materials are more than adequately exposed and liberated at these conditions. Strategically placed cameras are provided for additional remote visual monitoring of solid wastes and incineration systems.

The local control panel for the shredder system has auxiliary relays, contacts, and accessories for interfacing the

control and alarms with the main control panel in the K-1435A control room. The panel and associated components meet applicable national codes and standards.

The shredded wastes are stored in a shredded waste hopper below the 821-foot-elevation floor. The shredded waste hopper is at a critical point in the facility operation because of the tendency of stored material to bridge, thus blocking the feed. To mitigate the problem, this hopper is designed with a monorail grapple hook system that allows for transport to the ram feeder; this system is described in Section 4.3.4.1. The hopper has 2 1/2 days' capacity and has a sump and a drain line connected to the PCB-contaminated liquid storage tank serving the PCB drum handling unit.

4.3.4 Waste Feed Systems

The waste feed systems introduce shredded materials, bulk solids, and liquid and sludge wastes for incineration. Included are the following systems:

- Shredded Product Conveyor System
- Bulk Solids Feed System
- Ram Feeder System
- Package Drop
- Bottle Drop System (will not be used, 4/88)
- Liquid Waste Feed System
- Sludge Waste Feed System

4.3.4.1 Shredded Product Conveyor System

The shredded product conveyor system (CO-417) is an enclosed elevated monorail with a motorized trolley, electric cable hoist with load cells, and a grasping device. The system automatically picks up from the shredded waste hopper, conveys, and releases

shredded waste materials into a weigh hopper above the ram feeder inlet chute at a rate of up to 1000 lb/hr. The entire system operates in an enclosed environment. An inert (nitrogen) atmosphere is maintained within the enclosure to minimize the explosion hazards of the environment. Three oxygen sensors and one nitrogen flow sensor are strategically placed and have the capability to initiate automatic system shutdown, as described in Section 4.4.7.2.

Components comprising the shredded product conveyor system are enclosure; monorail and trolley; hoist; grapple; instrumentation, power, and control equipment; and weigh hopper.

The enclosure, approximately 4 feet wide by 6 feet high, is constructed of A-36 structural steel members and covered with 16-gauge, galvanized corrugated steel roof and siding. Access panel doors are on each side, and a special end panel allows passage of the trolley, hoist, and grapple assembly for servicing. These panels and all metal-to-metal joints are sealed with gaskets. The atmosphere within the enclosure is greater than the kiln internal pressure. The floor is designed to withstand the impact of the loaded grapple in case of a broken cable or other malfunction. The floor is lined with a wear-resistant non-metallic surface to prevent sparks and to minimize wear from shredded steel dangling from the grapple.

The monorail and its structural steel supports are constructed of A-36 carbon steel. The rail is equipped with steel blocks to limit trolley travel in case of limit switch malfunction. The trolley is powered by an explosion-proof, electric motor complete with automatic controls for starting, stopping, and positioning the trolley. There are three

trolley positions over the pick-up hopper but only one release point. A trolley brake permits proper positioning.

The hoist is powered by an explosion-proof, electric motor complete with automatic controls. It is rated for a 2,000-lb capacity. The stainless steel cable and the cable drum is designed for a maximum lift of 15 feet. The hoist is equipped with load cells and cable-tension sensing devices for monitoring the weight of shredded waste handled each cycle.

The grapple is designed to automatically pick up, hold while conveying, and then release 1,200 pounds an hour of shredded waste materials. Shredded products consist of steel and fiberpack drums, wooden pallets, and other miscellaneous refuse, with such residual liquids as PCB-contaminated oils and waste organic solvents. The grapple is equipped with replaceable teeth and/or wear strips on the grasping surface. The grapple is cable operated and is powered by an independent, motor-driven drum carried on the hoist.

The instrumentation, power, and control equipment for the shredded product conveyor system is consistent with the requirements for application in a hazardous area, that is, Class I, Division 1, Group D. A local control panel, as described previously, is provided for manual control during inspection and service periods. The automatic operating sequence is as follows, beginning with trolley at rest on center line of the shredded waste hopper and with hoist raised:

1. Grapple opens, hoist lowers until it comes to rest (sensed by cable-tension sensing device).

2. Grapple closes.
3. Hoist raises to predetermined upper limit.
4. Trolley travels to centerline position at proper elevation over ram feeder inlet hopper.
5. Grapple opens.
6. Trolley travels to centerline position of the shredded waste hopper.
7. Steps 1 through 6 repeated.
8. Second and third positions at the shredded waste hopper are integrated as operating experience indicates.

The weigh hopper, which serves both the shredded product conveyor and the bulk solids converyors, is supported on load cells and is equipped with a slide gate. The load cells report the material weight to a control room indicator. The air-operated slide gate, when opened by the solids feed control system, deposits the shredded material into the ram feeder.

4.3.4.2 Bulk Solids Feed System

The bulk solids feed system receives bulk solids (such as soils and bedding) from dump trucks and dumpsters and conveys the wastes to the weigh hopper above the ram feeder. The system is enclosed, having access panels for cleaning, and is ventilated.

Components of this feed system include (1) the bulks solids feed hopper, (2) vent stack with fan, (3) the bulk solids feeder (size reduction), (4) the bulk solids conveyors, and (5) air sweep system.

The bulk solids feed hopper stores the bulk solids materials. A screen at the top of the hopper prevents lumps larger than 4 inches from entering the hopper. The top is covered and connected by duct work to an exhaust stack for odor control. The flanged outlet is connected to the bulk solids feeder.

Connected to the feed hopper, the bulk solids feeder withdraws and feeds materials to the bulk solids conveyors. It is completely enclosed, except for its drive and drive motor. The feeder has an overall height of approximately 4 feet 1 1/2 inches, including vertical sides of the feeder inlet hopper. The feeder with its hopper has a capacity of approximately 4 cubic yards of materials. The inlet has inside dimensions of 5 feet 11 1/2 inches by 6 feet 9 inches. The discharge opening has inside dimensions of 1 foot by 6 feet 10 1/2 inches.

The bulk solids feeder is a screw type with removable screws that have 28 percent chrome alloy blades for reducing the material size to 2 inches. This screw-type feeder is designed to reduce shale and limestone rock from 4 inches to 2 inches and to feed a pocket belt conveyor at 1200 lb/hr of any combination of materials. Materials fed consist of hazardous organic and PCB-contaminated soils from land disposal and runoff ponds, used animal bedding consisting of animal-contaminated wood shavings, and mixtures of both. The soil densities are 100 lb/ft^3 (average) and 125 lb/ft^3 (maximum wet). The density of the animal bedding is 25 lb/ft^3. The feeder has a variable-speed drive capable of delivering one cubic foot a cycle, or 25 to 100 pounds of material a cycle. It is required to feed from the hopper and discharge to a pocket belt conveyor at the maximum rate of 1,200 lb/hr (normally 700 lb/hr).

As components of the bulk solids feeder, the bulk solids conveyors start at the discharge of the feeder and terminate at the weigh hopper. The conveyors and associated equipment receive and convey bulk solids to the weigh hopper above the ram feeder. The features of the bulk solids conveyors include the following: pocket belt conveyor, troughed belt conveyor, and enclosures.

The pocket belt conveyor (CO-421) receives materials (described previously) from the screw feeder, elevates, and conveys the materials at a maximum design rate of 1,200 lb/hr (normally 1000 lb/hr). The troughed belt conveyor (CO-422) conveys materials at a maximum design rate of 1,200 lb/hr (normally 1000 lb/hr). The pocket belt conveyor has thumpers that clean the carrying side of the belting, and the troughed conveyor has spring-blade cleaners.

The enclosures for the bulk solids conveyors are ridged and span a minimum of 10 feet between support points. Enclosures are kept at a negative pressure, and the conveyor system is air swept.

The air sweep system sweeps the bulk solids conveyor enclosures with ambient air. The system includes an exhaust draft fan and two carbon canisters. Ambient air, together with any released vapors, is drawn out of the enclosures, scrubbed in the carbon canister system, and discharged to atmosphere.

4.3.4.3 Ram Feeder System

The ram feeder system receives from the conveyors and feeds to the rotary kiln the following materials: shredded materials, bulk solids, floor sweepings, fines, and absorbents for free liquids such as PCB- and non-PCB-contaminated oils and waste organic solvents. Materials of construction and equipment, as described below, are compatible with long-term, continuous operation and constant exposure to these materials. All cylinder front seals and O-rings, except for bottle drop valves, are Viton. The ram feeder system is sealed to prevent the escape or counterflow of fuel, air, fugitive dust and/or combustion gases from the kiln. Operating temperature and pressure at the kiln ranges from 1472°F to 2282°F and -2.0 minimum to 0 maximum inches water column, respectively.

The ram feeder system includes the following components. Figure 4.3-5 shows the ram feeder arrangement.

- Ram feeder
- Feeder frame and barrel assembly
- Ram head and trolley assembly
- Inlet and discharge slide gates
- Hydraulic cylinders and power unit
- Controls
- Local control panel

The ram feeder feeds shredded steel drums, fiberpacks, wooden pallets, and bulk solids consisting primarily of PCB-contaminated soil with some laboratory animal bedding material. The feeder is sized to accommodate up to a 1/2-cubic yard charge.

The feeder frame and barrel assembly is fabricated of structural steel members and steel plate of welded and bolted construction to facilitate access to and replacement of gates, seals, liner plates, refractories, and other serviceable components and replaceable materials.

A ram head and trolley assembly is provided. The header is steel and configurated to totally sweep all waste materials through the barrel and into the kiln.

Inlet and discharge slide gates for the ram feeder are fabricated of steel. The ram feeder inlet slide gate is a minimum of 3/4-inch steel plate, two feet square inside frame, supported by and slides on a smooth, self-lubricating surface mounted on the top side of the ram feeder barrel, and arranged for horizontal operation. The ram feeder discharge gate is a

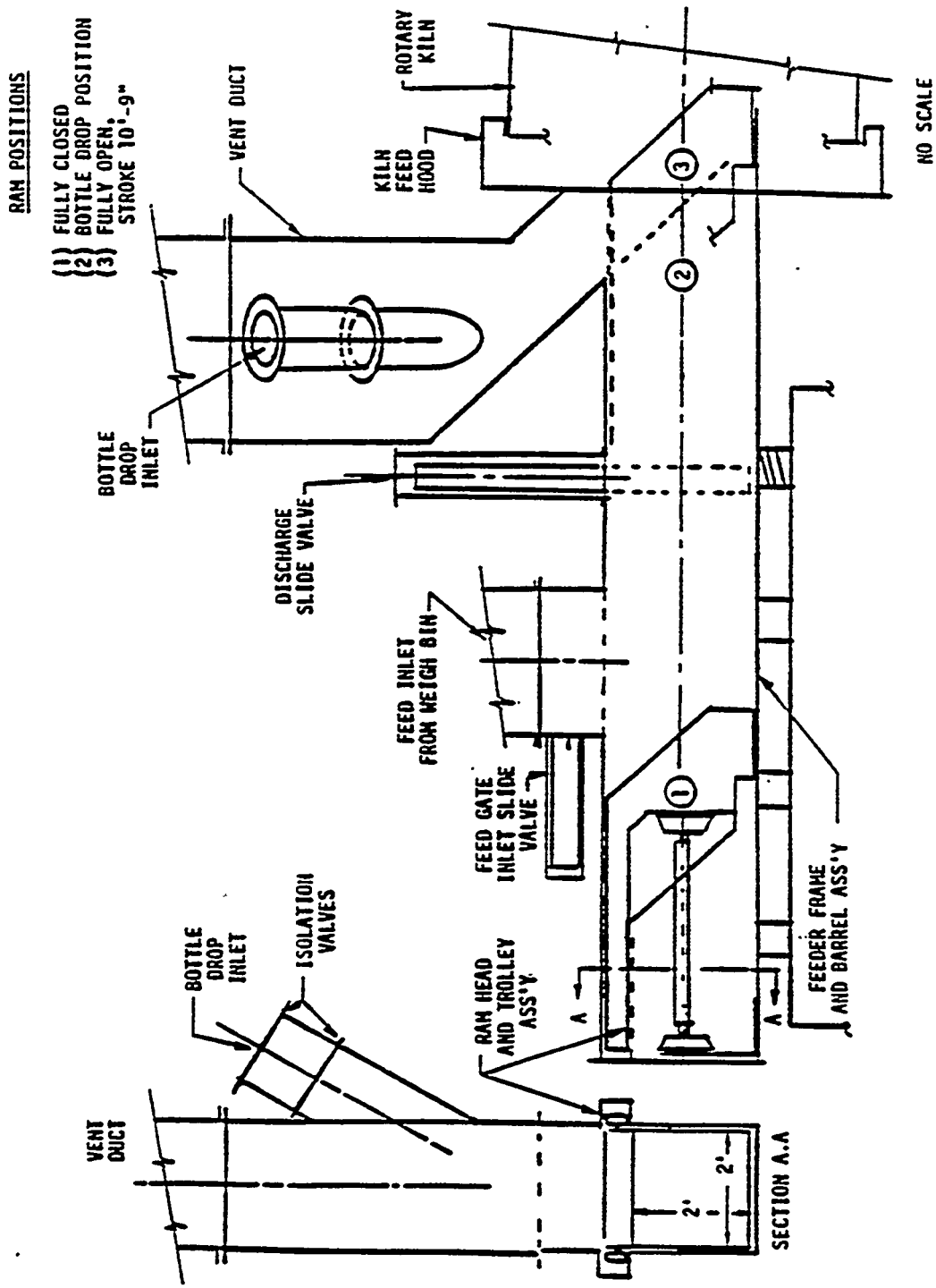

Figure 4.3-5. Ram feeder for K-1435 incineration facility

minimum of 1/2-inch steel plate, two feet square inside frame, mounted on the top side of the feeder barrel, and arranged for vertical operation. All surfaces between the discharge slide gate and the kiln are Type 304 stainless steel. The body of the discharge gate is a 304 stainless steel frame filled with plastic refractory. The side of the gate facing the ram is 1/2-inch steel plate. Both gates are sealed with Inconel material. The gates are operated by the hydraulic cylinders mounted on the gate frame. Instrumentation and controls include solenoid directional valves, double-pole, double-throw position switches to indicate "Gate Opened" and "Gate Closed." No switches are mounted inside the ram feeder barrel.

The hydraulic cylinders and power unit for the ram feeder system is designed to operate 20,000 cycles without service downtime. The hydraulic power unit is skid mounted. The hydraulic system and components are sized to compensate for material buildup on walls of the ram feeder and along sides of the slide gates. The hydraulic unit is 100 percent redundant with dual pumps, motor, and controls and includes the following instrumentation and equipment:

1. Remote-operated solenoid directional valves with spring return manual override operators, mounted on a manifold with engraved nameplates.
2. Three pressure switches and three liquid filled gauges (one for ram and each slide gate) and one low/high temperature switch.
3. Nonflammable hydraulic fluid suitable for outdoor use.
4. Armored rotameter with integral flow switch for indication of flow to cylinders.

5. Electrically operated, thermostatically controlled oil reservoir immersion heater and pump discharge water cooler for temperature/viscosity control of hydraulic oil.
6. Two pump and motor sets and a switching manifold for powering the system from either pump.
7. A wrench-operated needle valve for flow control and an isolation valve at the cylinder for maintenance for each hydraulic line to and from cylinders.

Controls for the ram feeder system include the following:

1. A programmable logic controller (PLC) interfaces with the control panel and provides all control logic.
2. The gates and ram head controls are series-wired interlocked so that (1) both gates cannot be open at the same time and (2) ram head cannot be advanced or retracted unless the inlet gate is fully closed and the discharge gate is fully opened.
3. One set of contacts on each position switch at the terminal strip is used by the PLC; the other set is used for the series-wired interlocks.

The ram feeder system also has a local control panel with the same features as those described for other systems.

4.3.4.4 Package Drop

Biological wastes are packaged in 10-inch-diameter 15-inch-long containers. The wastes are fed to the kiln through the package drop system. Biological waste characteristics are discussed in Section 4.2.4.

4 ^,4.5 Bottle Drop System (will not be used, 4/88)

An 18-inch bottle drop chute in the emergency vent stack (CA-501), which is described in Section 4.3.5.1, was provided to

manually introduce laboratory specimens to the kiln from an access platform but will not be used (4/88). A mating flange, approximately 2 feet by 4 feet, provides connection for the vent stack. The bottle drop chute includes two 18-inch-diameter slide gates, complete with hydraulic cylinder actuators and a pushbutton at the bottle drop. Hydraulic cylinder controls include series-wired interlocks to prevent both gates from being opened at the same time. Double-pole, double-throw position switches are provided for each gate. One pair of contacts is for series-wiring and the other pair is wired to the terminal strip for use by the PLC. The bottom slide gate is 304 stainless steel, and the duct and the chute are mild steel.

4.3.4.6 Liquid Waste Feed System

The liquid waste feed system delivers liquid and aqueous liquid wastes from the tank farm to the combustion systems, which are described in Section 4.3.5. The system includes six agitated feed tanks containing blended wastes, as classified in Section 4.2, and associated components:

- Primary liquid waste feed tank T-305A
- Primary liquid waste feed tank T-305B
- Secondary liquid waste feed tank T-306A
- Secondary liquid waste feed tank T-306B
- Aqueous liquid waste feed tank T-307A
- Aqueous liquid waste feed tank T-307B

As shown in Figure 4.3-6, these tanks are in parallel arrangement, two tanks for each burner system. For each set of tanks, there are two liquid strainers piped in parallel, two feed pumps, and a recirculation flow pipe loop. Two grinder pumps are

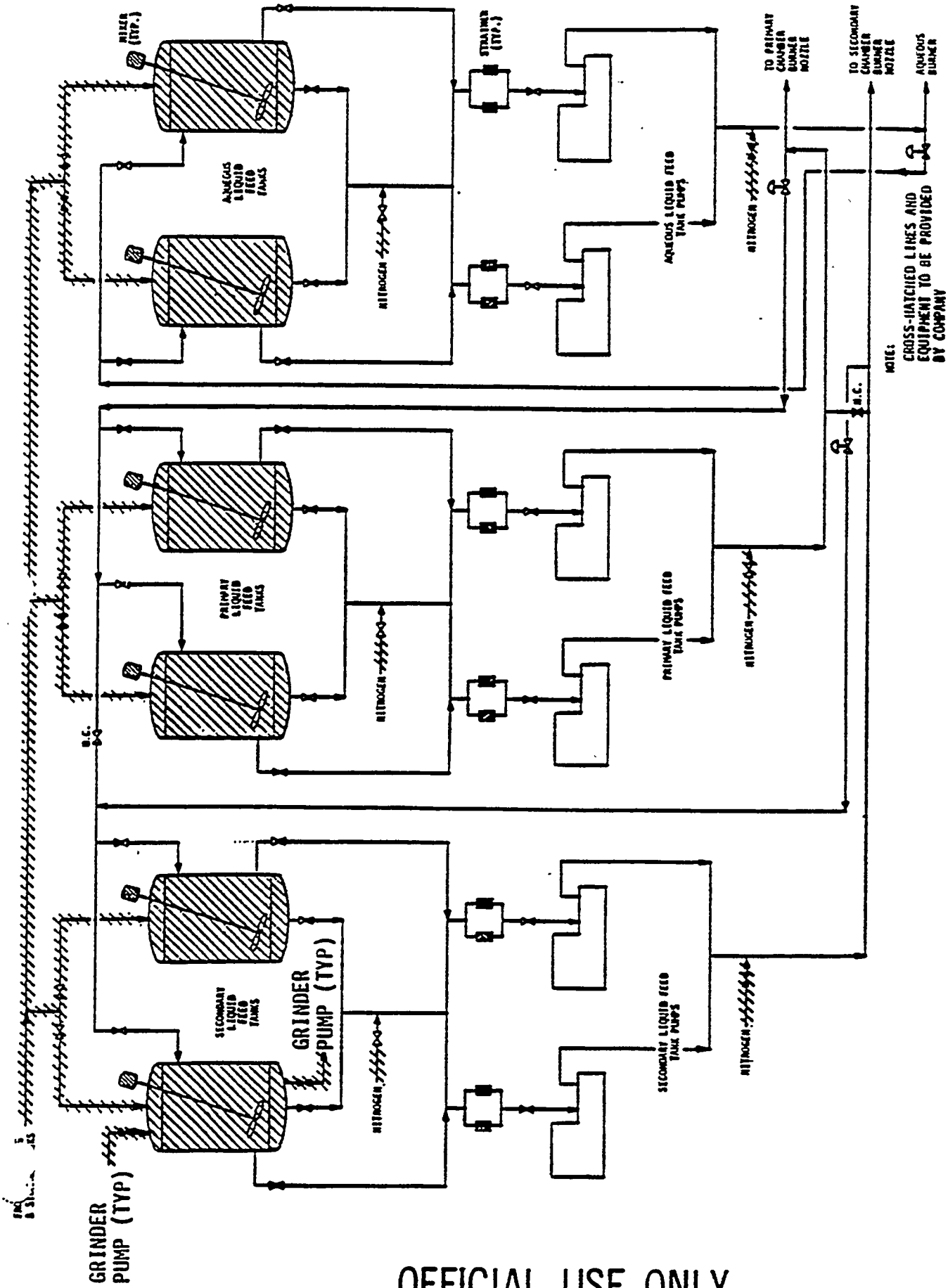

Figure 4.3-6. Liquid feed system

provided for reducing the size of solids that may form or be present in the feed tanks: one serves both the two primary liquid waste (PCB) feed tanks and the two aqueous liquid waste (non-PCB) feed tanks, and the other serves the secondary liquid waste feed tanks. This grinder pump arrangement precludes PCB cross-contamination of the two streams. A nitrogen purge system is provided for purging liquids and hazardous vapors from the pumps, piping, filters, or other components prior to maintenance.

Pumps, piping, valves, and other components are designed and installed to minimize the risk of spills. Pumps are provided with inlet and outlet isolation valves and with pans to contain any seal liquid leakage and spillage. All pumps are mounted adjacent to the designated tanks within the tank farm area and are supported on cast-in-place concrete foundation. All pumps are provided with overpressure protection where overpressurization is possible due to shutting off pump discharge line.

The liquid wastes are pumped in the recirculating loop configuration with a back pressure control and a flow control instrument loop in the burner feed lateral line. Instrumentation and controls are discussed in Section 4.4.

Figures 4.3-7 and 4.3-8 are block flow diagrams of the liquid waste feed system, showing the associated valves and grinder pumps. The system functions as follows.

The primary liquid waste feed tanks (T-305A and T-305B) contain 5,000 gallons each of primary PCB-contaminated liquid wastes. The liquids flow through strainers (S-305A and S-305B) before being pumped. Solids from the strainers can be collected in drums for subsequent processing in the incinerator. If a strainer becomes plugged with solids, the feed tank content can be recycled through the grinder pump (P-304). Rotary lobe pumps

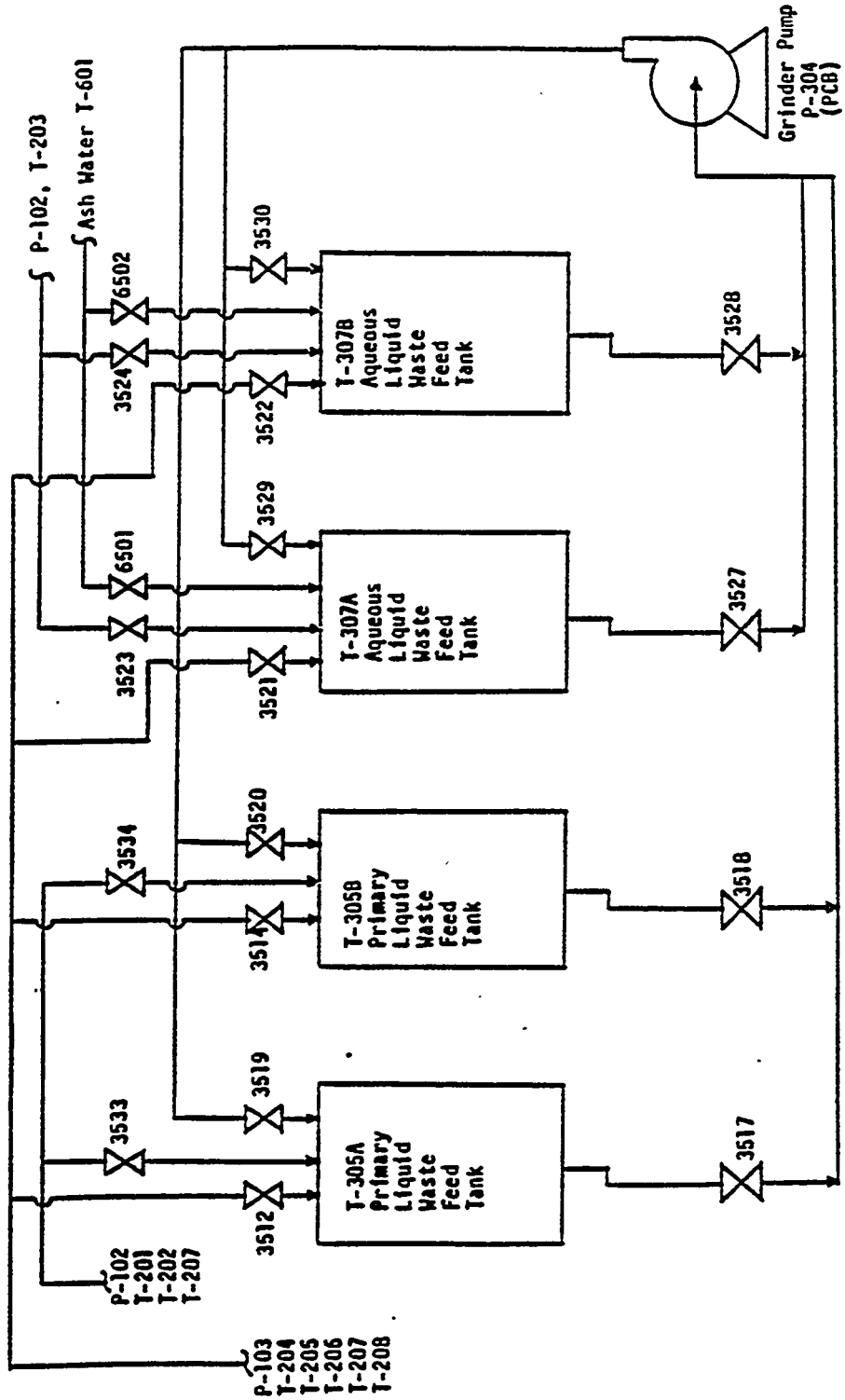

Figure 4.3-7. Liquid waste (PCB) feed system

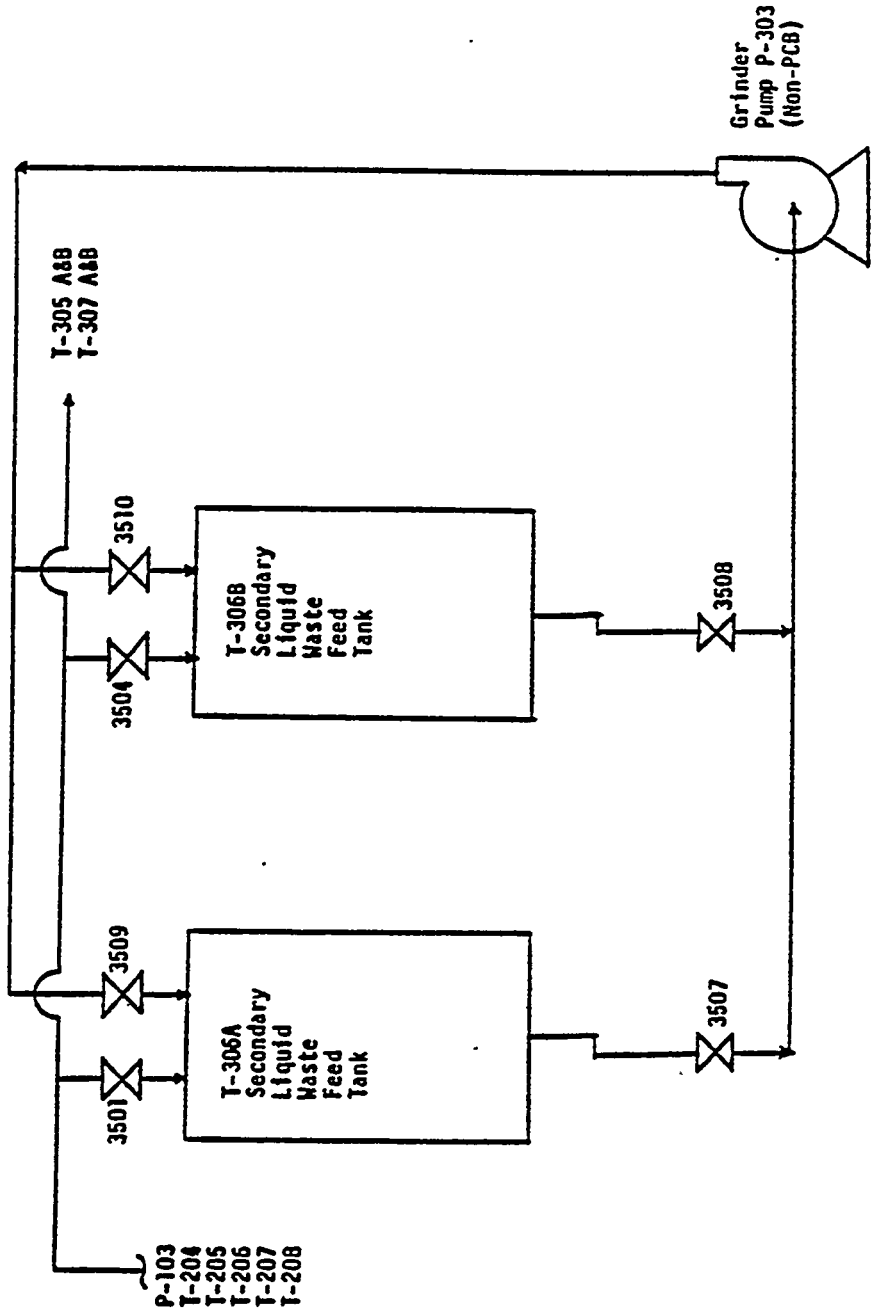

Figure 4.3-8. Liquid waste (non-PCB) feed system

(P-305A and P-305B) feed the primary liquid wastes at controlled rates (1 to 2 gpm) through the recirculating loop to the primary liquid waste burner (BRN-501) or to the secondary liquid waste burner (BRN-516). When the kiln is not in operation, the primary liquids are directed to Burner BRN-516.

Primary liquid waste streams are semi-abrasive/corrosive with a solid content of 5 weight percent or less.

The secondary liquid waste tanks (T-306A and T-306B) each contain 5,000 gallons of secondary non-PCB liquid wastes. As in the case of primary liquid wastes, the secondary liquid wastes flow through stainers (S-306A and S-306B) before being pumped. A grinder pump (P-303) is also used. Rotary lobe pumps (P-306A and P-306B) feed the secondary liquid wastes at controlled rates (16 gpm) through the recirculating loop to the secondary liquid waste burner (BRN-516).

Secondary liquid waste streams are semi-abrasive/corrosive with a solid content of 5 weight percent or less.

The aqueous liquid waste feed tanks (T-307A and T-307B) contain 5,000 gallons each of aqueous liquid wastes. The aqueous liquid wastes also flow through strainers (S-307A and S-307B) before being pumped. The same grinder pump (P-304) used for the primary liquid waste feed system is used for the aqueous feed system. Rotary lobe pumps (P-307A and P307B) feed the aqueous liquid wastes at control rates (maximum 1 gpm) through the recirculating loop to the primary combustion chamber aqueous nozzle. The nozzle is equipped for either steam or air atomization of aqueous waste.

Aqueous liquid waste streams are also semi-abrasive/corrosive with a solid content of 5 weight percent or less.

4.3.4.7 Sludge Waste Feed System

The sludge waste feed system is used to pump hazardous sludge wastes to the rotary kiln. The system includes a sludge lance and a pump. The sludge waste feed pump (P-110) takes suction from a weigh bin, feed hopper and delivers atomized sludge wastes through the lance pipe to the rotary kiln. The pump is designed to deliver 1.25 gpm and it is a progressive cavity, positive displacement type pump. Sludge waste is delivered to the drum storage building in 55 gallon drums and dumped into the feed hopper.

The sludge wastes are semi-abrasive/corrosive with up to 20 percent or higher solids by weight.

4.3.5 Incineration Systems

The incineration systems receive solid, liquid/aqueous, and sludge wastes from the previously described feed systems. Solid wastes enter the incinerator from the ram feeder, while liquid wastes enter from the liquid waste feed tanks or directly from a tanker containing flammable liquids that do not require further processing. Solids and PCB-containing liquids enter the primary combustion chamber, and non-PCB combustible liquids enter the secondary combustion chamber. When the primary combustion chamber is not in operation, some PCB-containing liquids may be burned in the secondary combustion chamber.

The incineration process is shown in Figure 4.3-9, along with the off-gas and waste removal systems, and includes the following systems:

- Primary Combustion System
- Mixing Chamber
- Ash Handling System
- Secondary Combustion System

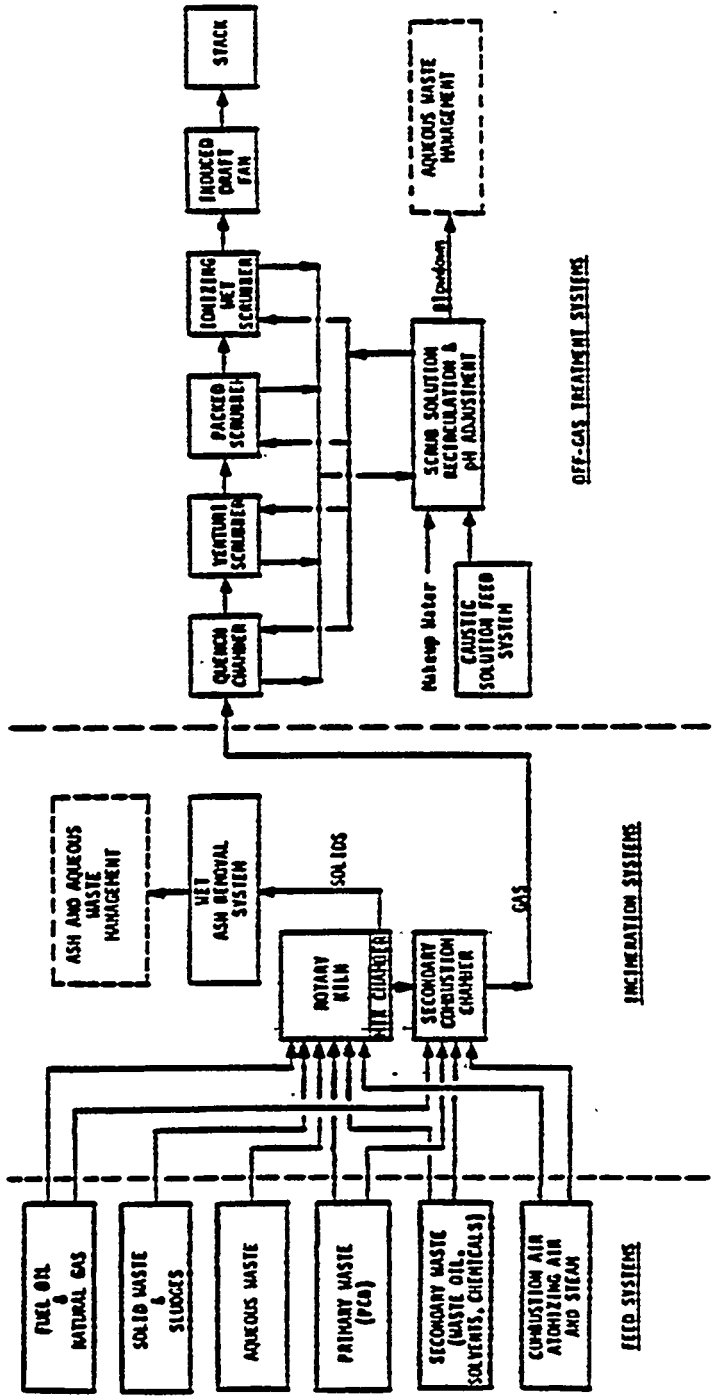

Figure 4.3-9. Block flow diagram of incineration systems

4.3.5.1 Primary Combustion System

The first stage of the incineration is the primary combustion system. Components consist of the following:

- Primary Combustion Chamber
- Primary Burner System
- Primary Burner Management System
- Aqueous Burner System

The primary combustion chamber (rotary kiln), incinerates shredded drums, bulk solids, liquid/aqueous wastes, and sludge wastes and discharges the residue along with hot gases. Residue is conveyed from the kiln discharge, which is discussed later in this section, and hot gases pass through a mixing chamber to the secondary combustion chamber and on to the process gas cleaning system, which is described in Section 4.3.6. Rotary kiln features include kiln shell, riding rings, kiln face plate, air seals, trunnion assemblies, drive package, and an emergency vent stack.

The rotary kiln shell (H-500) is 7 feet 6 inches outside diameter by 25 feet long with an inside diameter of 6 feet. The shell is 5/8-inch carbon steel (ASTM A36) and is lined with 9-inch internal high-density refractory (Superduty).

The kiln shell is fitted with an air seal on each end to minimize air leakage.

The drive package for the rotary kiln is an adjustable-speed, hydraulic-powered, dual-trunnion drive motor (MH-500) and is designed to deliver at each trunnion shaft a minimum of 2 hp at a kiln speed of 1.55 rpm. The system is complete with pressure switches, time delay switches, main line valves, return line shutoff valves, and operator station.

The emergency vent stack (CA-501) is a surge vent. It is sized to accommodate gas flow in the event of a rapid expansion and is sealed by weighted louvered doors at the outlet. The stack also serves as a gravity-fed exhaust stack for the kiln in case of loss of induced draft while kiln feed material is burning. Interlocks and/or controls are provided to ensure that gases and pressures within the primary and secondary combustion chambers are maintained at a safe level. The bottle drop, previously described in Section 4.3.4.5, is included in the emergency vent stack.

The rotary kiln receives and thermally processes shredded steel drums and bulk solid wastes fed by the ram feeder and liquid and sludge wastes fired by a burner in the kiln faceplate. Additionally, the kiln receives natural gas or No. 2 fuel oil fired by an auxiliary burner to ensure stable combustion of the liquids being burned; the feed rate is ratio controlled to the rate of liquids being fed to each burner. Steam or air is used to atomize wastes fed through the burners and is ratio controlled to the flow of the wastes. An induced draft fan maintains subatmospheric pressures in both the kiln and the solid feed system to minimize the release of vapors from the feed system and of combustion gases from the kiln. The kiln internal atmosphere is oxidizing. The solids residence time of 1.5 hours at 700 lb/hr solids feed assures that the content of the PCB and hazardous organic compounds in the ash is less than 1 ppm and that the total organic carbon content does not exceed 1 percent by weight. The residence time completely volatilizes and thermally degrades the liquid components of waste and oxidizes the remaining pyrolyzed char to ash. The rotating action of the kiln at a speed ranging from 0.3 to 1.55 rpm continuously

advances and exposes unburned materials to oxidizing gases, thus assuring destruction of the organic content of the solids. Guards and warnings are required for protection against hot surface exposure and rotating equipment.

The primary burner system for the rotary kiln receives liquid wastes pumped from storage feed tanks. In addition, the burners and the pilots receive natural gas. The liquid waste and fuel to be burned are primary liquid wastes and No. 2 fuel oil. The primary burner system includes the primary liquid waste burner (BRN-501), the primary burner system air blower (F-501), the primary burner system air blower motor (F-501M), the primary auxiliary fuel burner (BRN-502), and the primary burner management system (BRN-501-1).

The primary liquid waste burner (North American Model 6514-8B) is a forced-draft, nozzle-mix type for natural gas and waste liquids and is complete with refractory port tile. It accommodates both steam and air as atomizing media for liquid fuels. It has a natural gas, spark-ignited, premix, interruptible pilot and a flame scanner. The fuel gun is adjustable and detachable for maintenance. The burner has a liquid-fuel strainer to remove material that can clog lines and a hand-adjustable liquid fuel metering valve on the liquid fuel gun head assembly. The burner is mounted in the rotary kiln face plate and fired concurrently with the kiln material flow that is in an oxidizing atmosphere.

The primary burner system air blower (Model 2370-33/1-T25C) supplies ambient combustion air at a maximum 2,800 scfm at a pressure of 32 inches w.c. to the primary liquid waste burner and to the primary auxiliary burner. It is complete with motor drive, coupling and guard, and common base plate. The blower

includes inlet screen, inlet filter and silencer (to meet the 85-dBA noise level at three feet), and outlet damper with motorized operator. The primary burner system air blower and motor assembly (25 hp) powers the blower at 3,600 rpm for a rated pressure of 1 psi.

The primary burner system switches to the auxiliary fuel system to maintain the incineration at operating temperatures when liquid waste is shut off or when kiln temperature drops below the minimum controlled temperature (1470°F).

The primary auxiliary fuel burner (Model 6514-8B) supplies natural gas/No. 2 fuel oil to the primary burner system and is located in the rotary kiln faceplate. It is identical to the primary liquid waste burner, complete with spark-ignited pilot, scanner, and other features. The burner is temperature controlled and combustion is supplied by a forced-draft blower rated at 1 psi.

The primary burner management system consists of a single-flame scanning/monitoring device. It includes fuel train piping in-line elements such as high and low pressure switches for fuel, atomizing medium and air, safety shutoff valves with manual reset on fuel, double block and bleed arrangement on gas fuel, pressure-reducing regulators, shutoff valves, and pressure regulators. Each burner has a separate pilot gas line with safety shutoff valves, manual reset type. Source of pilot gas is upstream of main gas control valves. The burner management system's indicating, alarm, and cycle status lights, selector switches, and pushbuttons are in a local control panel of NEMA-12 construction. The system is an NFPA standard flame program and fuel train piping system with 4-20 mA signals. It meets applicable national standards and codes.

Approximate conditions for the primary burner system include the following supply conditions at the burner:

Liquid waste fuel	70 psig, 70°F
Natural gas	1.5 to 2 inches w.c.
No. 2 fuel oil	70 psig, 70°F
Atomizing steam	80 psig, 400°F
Atomizing dry air	80 psig, 70°F

The rotary kiln also has an aqueous burner system that includes an aqueous burner (BRN-503) and a sludge lance (BRN-504). The aqueous nozzle receives waste directly from the aqueous liquid waste feed tanks (T-307A and T-307B). The aqueous wastes may be emulsified with waste oil to produce a high-heating-value liquid. The flow rate of the materials fed through the aqueous burner is manually set and is adjusted with each material fed according to the ability of the primary liquid waste burner to maintain kiln temperatures. Fuel oil from the fuel oil tank (T-210) can also be fed through the aqueous burner if the materials being fired through the primary liquid waste burner are insufficient to maintain kiln temperatures and require additional heat input. The aqueous nozzle and the sludge lance, each at the inlet end of the rotary kiln, are single nozzles with steam as the atomizing media and air as a back-up supply.

4.3.5.2 Mixing Chamber

The second stage of the incineration is the mixing chamber (H-505), which separates the primary combustion chamber (rotary kiln) and the secondary combustion chamber. The mixing chamber is carbon steel and has 2 inches of internal block insulation and 6 3/4 inches of internal refractory brick. The chamber collects the flue gases and ash discharged from the rotary kiln, reduces the gas velocity to allow particulates to drop out of the gas into the ash handling system (Section 4.3.5.3) and passes the hot flue gases into the secondary combustion system (Section

4.3.5.4). The maximum gas temperature in the mixing chamber is that of the kiln discharge; the minimum gas temperature is 100-200°F lower than the kiln discharge. The mixing chamber solids removal pump (P-404) removes the suspended ash and solids from the flooded water quench section at the bottom of the mixing chamber through a strainer (S-404) and discharges to the ash water tanks (T-601A or T-601B).

4.3.5.3 Ash Handling System

The ash handling system collects the ash falling from the mixing chamber. The system includes a concrete horizontal, water-filled quench trough, a residue conveyor (CO-510), and a sloped section to elevate the residue to the discharge level. Water in the ash trough provides a seal against air leakage into the system and prevents the ash from forming a solid slag. Overflow water from the ash trough flows into the ash water tanks as discussed in Section 4.4.4.2. Ash falls into the trough and onto the conveyor. Ash is drained of the bulk of its free moisture as it travels up the sloped section of the conveyor and then is conveyed to the ash hopper for subsequent disposal as discussed in Section 4.4.4.3.

4.3.5.4 Secondary Combustion System

Completing the incineration process is the secondary combustion system. The secondary combustion system receives hot flue gases from the mixing chamber and secondary liquid wastes fired by a waste burner. Natural gas or No. 2 fuel oil is fired by an auxiliary burner. Components of the system consist of the following:

- Secondary Combustion Chamber
- Secondary Burner System
- Secondary Burner Management System

The secondary combustion chamber (H-515) accepts hot kiln gases from the mixing chamber and secondary liquid wastes fired by a burner. The entrance to the secondary combustion chamber is

reduced to rapidly increase gas velocity and, in conjunction with the burners downstream, to provide turbulence and mixing of the kiln gas. Also, while it normally accepts secondary liquid wastes pumped from the secondary liquid waste feed tanks (T-306A and B), the secondary combustion chamber can accept wastes pumped from the primary liquid waste feed tanks (T-305A and B), from the fuel oil tank (T-210), or directly from a tanker. Features of the chamber include a vertical cylindrical chamber, a downstream horizontal rectangular duct, a cylindrical downcomer to the quench, and a thermal relief stack (CA-515). All three secondary combustion chamber sections are lined with 2 inches of internal block insulation and 6 3/4 inches of internal refractory brick that keep the skin temperature below 400°F. Guards and warning signs are required by NFPA code if hot surfaces exceeding 160°F are subject to personnel contact. The approximate inside dimensions of the chamber sections are as follows: Vertical chamber, 8.75 feet ID by 40 feet long; Horizontal duct, 4 by 4 feet by 12 feet long; and Downcomer, 4 feet ID by 26 feet long.

A thermal relief stack (CA-515) at the outlet of the secondary combustion chamber can vent combustion gases to the atmosphere in the event of an induced draft fan shutdown or of an interruption of the water feed to the quench chamber in the process gas cleaning system, which is discussed in Section 4.3.6. This prevents damage to the scrubber system during an interruption of quenching and avoids a backward flow from the incinerator during shutdown of the induced draft fan. When the thermal relief stack is used, all waste material and fuel feeds to the incinerator are automatically discontinued except for the feeds to the secondary auxiliary burner.

The secondary combustion chamber heats the flue gases from the mixing chamber and burns liquid wastes at an operating temperature of 1832°F to 2282°F and a nominal pressure of -1.5 inches water column to -2.5 inches water column. The residence time is 4 seconds (as compared to regulatory requirements of 2 seconds) with a minimum 3 percent excess oxygen. These

combustion conditions are adequate for the destruction of liquid PCBs. The chamber operates with an oxidizing atmosphere with occasional carbon monoxide slugging and spikes from the rotary kiln solids combustion process. Slag tends to run down the vertical walls of the secondary combustion chamber into the mixing chamber.

The secondary burner system is similar to the primary burner system previously described in Section 4.3.5.1 with the major difference being the status of the auxiliary burner under shutdown conditions. It includes the secondary liquid waste burner (BRN-516), the secondary burner system air blower (F-516), the secondary burner system air blower motor (F-516M), the secondary auxiliary fuel burner (BRN-517), and the secondary burner management system (BRN-516-1). These components have the same features and functions as those for the primary burner system components.

The secondary liquid waste burner and the secondary auxiliary fuel burner are mounted in the vertical sidewalls of the secondary combustion chamber and fires horizontally into the vertical up-flow of the flue gases from the rotary kiln. These secondary burners are at the throat section of the chamber, an area of high flue gas velocity (1000 ft/min) and gas turbulence. They are limited to a 8-foot flame throw. The secondary liquid waste burner provides the heat input to raise the chamber temperature to the required level. The secondary auxiliary fuel burner automatically provides fuel (natural gas or No. 2 fuel oil) as necessary to maintain the temperatures in the event the waste burner fails to provide the required heat input.

Approximate design conditions for the secondary burner system include the following supply conditions at the burner:

Liquid waste fuel	70 psig, 70°F
Natural gas	0 to 11 inches w.c.
No. 2 fuel oil	70 pisg, 70°F
Atomizing steam	80 psig, 400°F
Atomizing dry air	80 psig, 70°F

4.3.6 Process Gas Cleaning System

After secondary combustion in the incineration process, the off-gases from the secondary combustion chamber pass through the refractory-lined duct into the process gas cleaning system. This is a wet system that reduces both acidic gaseous and particulate emissions to the atmosphere to comply with TSCA and RCRA regulations and with state and local emission standards. The particulates and the opacity of the stack discharge gases are measured continuously. Figure 4.3-10 is a general flow diagram of the process gas cleaning system, and Table 4.3-3 lists the corresponding maximum case design conditions.

The process gas cleaning system includes the following components:

- Quench chamber
- Venturi scrubber
- Mist Eliminator
- Packed bed scrubber
- Ionizing wet scrubber
- Scrubbing solution control system
- Induced draft fan
- Stack

4.3.6.1 Quench Chamber

The quench chamber (T-501) receives and cools the hot flue gas from the secondary combustion chamber. The chamber is equipped with refractory lining, process water system, a sump, recirculating water system, and an emergency water system.

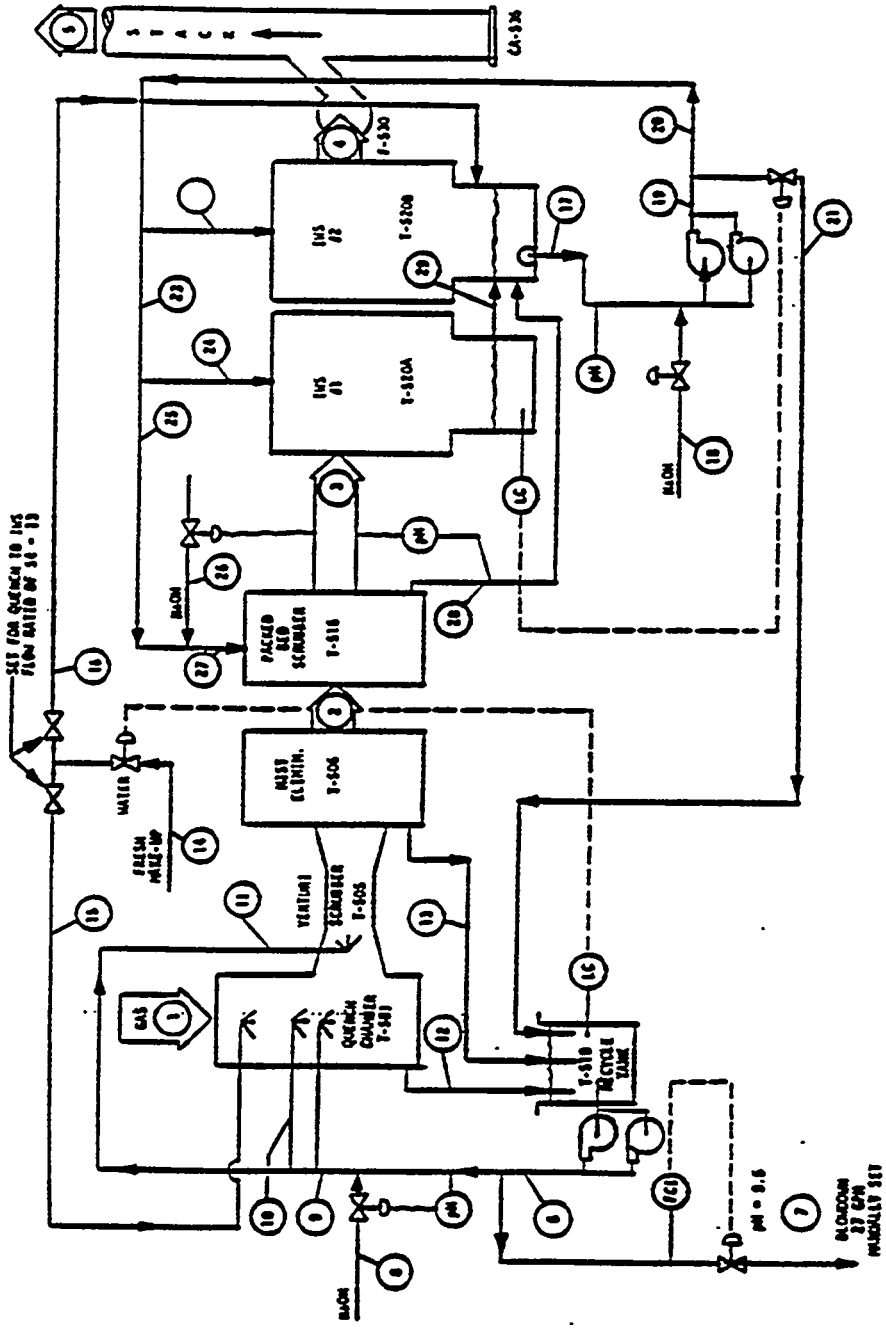

Figure 4.3-10. Flow of gas and liquid streams of process gas cleaning system

Table 4.3-3 Maximum case design conditions for gas and liquid streams for process gas cleaning system

GAS STREAMS

Stream Number	Total Flow ACFM	Total Flow #/Hr	Temp. degrees F	Press. in. H.G.	Flow Rates of Variable Components #/Hr: Water Vapor	HCl	SO2	HF	Part.
1	36,127	30,000	2,282	- 2.5	3,485	200	19	2	110
2	17,654	50,430	188	-13.0	24,141	15	9.5	.15	80
3	17,654	50,399	188	-15.0	24,141	.75	2.85	.0075	70
4	17,654	50,395	188	-16.0	24,141	.0003	.114	.000003	2.8
5	17,654	50,395	188	0	24,141	.0003	.114	.000003	2.8

LIQUID STREAMS

Stream Number	Flow GPM	Temp. degrees F	Press. PSIG	Calc. pH	Flow Rate #/Hr: H2O	NaOH	Sodium Salts	Susp'd Solids	Composition %: Dissolvd. Solids	Susp'd Solids
6	327	188	35	9.5	163,500	2.33	4,490	1,283	2.73	0.78
7	27	188	35	9.5	13,196	.188	362	107.2	2.73	0.78
8	.57	AMB			218.4	218.4	0	0	50	0
9	300	188	30	11.9	150,522	220.5	4,128	1,176	2.86	0.78
10	153	188	25	11.9	76,988	112.7	2,111	600	2.86	0.78
11	147	188	25	11.9	78,584	107.8	2,017	576	2.86	0.78
12	166	188	0	9.5	83,332	1.17	2,273	615	2.71	0.74
13	147	188	0	9.5	73,628	1.03	2,151	591	2.89	0.80
14	67	AMB	50	7	33,500	0	0	0	0	0
15	54	AMB	50	7	27,000	0	0	0	0	0
16	13	AMB	1	7	6,500	0	0	0	0	0
17	1,373	188	0	9.5	673,822	9.43	4,415	7,956	0.71	1.16
18	.0113	AMB			4.3	4.3	0	0	50	0
19	1,373	188	26	9.7	673,826	13.69	4,415	7,956	0.71	1.16
20	1,360	188	25	9.7	667,288	13.56	4,372	7,879	0.71	1.16
21	13	188	1	9.7	6,538	.133	42.8	77.2	0.71	1.16
22	600	188	20	9.7	294,392	5.98	1,929	3,476	0.71	1.16
23	760	188	20	9.7	372,896	7.58	2,443	4,403	0.71	1.16
24	600	188	20	9.7	294,392	5.98	1,929	3,476	0.71	1.16
25	160	188	20	9.7	78,504	1.60	514	927	0.71	1.16
26	.0632	AMB			24.1	23.7	0	0	50	0
27	160	188	15	11.1	78,528	25.3	514	927	0.74	1.16
28	160	188	0	9.5	78,537	1.10	550	937	0.75	1.17
29	600	188	0	9.5	294,393	3.85	1,933	3,526	0.71	1.18

The quench chamber (19 feet high and 5.5. feet in diameter) has a minimum 9-inch-thick acid-resistant refractory lining suitable to withstand the process gas temperature and composition and the process scrubbing water composition. The first three feet on the gas inlet side is lined with silica brick and the remainder with super-duty acid brick.

Two water spray systems provide the cooling water for the quench chamber: process water system and recirculating water system. Both water systems have spray nozzles with strainers on the supply lines to prevent line-clogging. Fresh water to minimize salt fume formation flows from the process water system through the 50-mesh, process water spray header strainer (S-504) that removes insoluble particles. Excess water flows by gravity to the quench chamber integral sump and continues to the recirculating water system with redundant pumps. Recirculating pumps (P-501A and P-501B), one operating and one spare, recycle this water back to the quench chamber. The 100-mesh, recycle pump suction strainer (S-501) removes insoluble particles to prevent plugging of the quench spray nozzles. The pH of the recycle water is controlled with 50-percent caustic from the caustic solution storage tank (T-215).

The fire (protection) water system is an emergency water backup for the process water and recycle water system.

The quench chamber normally receives the hot flue gas at about 2282°F containing particulates, SO_2, HF, and HCl and cools and saturates the flue gas to the adiabatic saturation temperature with the series of internal sprays of fresh and recirculated water.

If the process cooling water stream should fail, the control and monitoring instrumentation would shut off all waste feed streams and open the thermal relief stack. This will ensure the protection of the off gas treatment system from higher-than-design temperatures.

The saturated gas stream from the quench chamber flows at the design conditions listed in Table 4.3-3 through the fire-retardant duct (2 feet 6 inches in diameter) to the inlet of the venturi scrubber.

4.3.6.2 Venturi Scrubber

The venturi scrubber (T-505) receives the cooled and water-saturated flue gas and removes particulates of one micron and larger and a portion of the hydrochloric acid. The scrubber (8 feet long, 3 feet high, and 3 feet wide) consists of converging and diverging cones with an automatic variable throat to maintain a constant pressure drop, an integral sump, and a catch pan. The recirculating water system serving the quench chamber supplies the scrub solution through a nozzle upstream of the throat. The recycle water flows back to the quench sump. The pH of the recycle water is controlled by using 50-percent caustic from the caustic solution storage tank. Table 4.3-9 lists the maximum case outlet design conditions.

4.3.6.3 Mist Eliminator

The mist eliminator (V-506) following the venturi scrubber and preceding the packed bed scrubber removes the entrained water from the saturated flue gas and minimizes interference with the cross flow liquid/gas flow in the packed bed scrubber.

From the mist eliminator, effluents flow by gravity to the packed bed scrubber.

4.3.6.4 Packed Bed Scrubber

The packed bed scrubber (T-515) removes additional soluble and reactive acid gases such as HCl, HF, and SO_2. The cylindrical scrubber (10 feet long, 9 feet high, and 6 feet wide) is a horizontal crossflow scrubber, contains three feet of irrigated packing, and has an entrainment separator following the packed bed. Recirculated scrubber water irrigates the packing. The water recycle system serving the ionizing wet scrubber (Section 4.3.6.5) provides the recycle water. The pH of the recycle water is controlled with 50-percent caustic from the caustic solution storage tank. The packed bed scrubber has an integral sump and catch pan. Water flows from the sump to the ionizing wet scrubber sumps.

Instrumentation measures the gas flow pressure drop across the packed bed scrubber and shuts off the waste feed streams to the rotary kiln if the pressure drop exceeds 2.0 inches w.c., permitting the bed to be cleaned or replaced.

Effluents from the packed bed scrubber flow through an inlet transition section. The inlet transition provides a gradual transition from the sampling duct to the ionizing wet scrubber to minimize turbulence.

4.3.6.5 Ionizing Wet Scrubber

The ionizing wet scrubber (22 feet long, 19 feet high, and 12 feet wide) removes the fine particulates of less than one micron from the flue gas stream. Key features of the two-stage, horizontal crossflow scrubber are (1) an ionizer module (T-520A), (2) a charged particles scrubber (T-520B), and (3) a recirculating water system. Each stage has an integral sump, a catch pan, and a local control panel.

4.3.6.6 Scrubbing Solution Control System

The scrubbing solution control system maintains the proper pH level of the scrubbing solutions to prevent environmental insult and equipment damage and malfunction of process gas cleaning equipment: quench chamber, venturi scrubber, packed bed scrubber, and ionizing wet scrubber. The system includes the following components: caustic solution storage tank, two caustic solution feed pumps, and instrumentation.

The caustic solution storage tank (T-215) stores 7,500 gallons of 50 percent sodium hydroxide (NaOH). The caustic solution feed pumps (P-215A and P-215B), one operating and one spare, transfer the caustic solution to the off-gas recirculating water systems to control the scrubbing solution acidity. Instruments monitor the pH in the system at two places.

4.3.6.7 Induced Draft Fan

From the flow control damper section at the outlet of the ionizing wet scrubber, the flue gas stream passes to the induced draft fan. The induced draft fan (F-530) pulls the combustion and flue gases through the incineration and process gas cleaning systems at negative pressure. This centrifugal, 125-hp exhaust fan assembly includes an inlet volume control damper, a dampered surge bypass duct to meet varying turndown conditions, and instrumentation.

Instrumentation and controls for the induced draft fan measure the following: gas inlet and outlet pressure, fan drive motor power, and vibration. Gas pressure and temperature in

other parts of the system that would be affected by the loss of fan operation are also monitored. Loss of fan operation shuts off the waste feed streams, fuel, and natural gas to the incineration systems. Also, a loss of vacuum or a system overpressure can activate the vent systems. Proper venting is based on established fire and explosion criteria. Fan vibration is displayed on the control room panel and a high vibration alarm is provided.

The fan discharges the water-saturated flue gas to the stack. A short FRP duct section carries the gas stream from the fan outlet to the stack inlet.

4.3.6.8 Stack

The stack (CA-535) receives the water-saturated flue gas and vents it to the atmosphere. It is 100 feet high and 4 feet 6 inches in diameter with a gas velocity of approximately 20 ft/sec. The stack is equipped with two 4-inch EPA sample ports spaced 90 degrees for isokinetic sampling, a gas monitor (CO, O_2, and CO_2), an opacity monitor, and access platforms. A strip chart in the control room of Building K-1435A continuously records the levels of CO. The combustion gas velocity also is monitored and recorded in the control room by monitoring the Induced Draft fan current (amps).

The process gas cleaning system is designed to ensure that stack emissions comply with regulations:

Tennessee Air Pollution Control Regulations
- Chapter 1200-3-5.01 - visible emissions
- Chapter 1200-3-6-.02/3a - particulate emissions

Toxic Substance Control Act
- 40 CFR 761

Resource Conservation and Recovery Act
- 40 CFR 264

The performance guarantee criteria for the process gas cleaning system follows:

Guarantee point: stack

Particulates:

97.3% minimum removal efficiency

0.05 grains/dry scf maximum removal efficiency of gas corrected to 7% O_2

HCl:

99.5% minimum removal efficiency

1.8 kg/hr maximum emission

Acidic gases combined:

99.2% minimum combined removal efficiency (HCl, SO_2, and HF)

Opacity: 20% maximum

PCB emissions: 1 mg/kg of PCB solids fed DRE = 99.9999%

RCRA DRE: 99.993%

4.3.7 Effluent Management

The gaseous/liquid/solid effluents, their sources, and control methods are discussed in Section 4.4.

4.3.8 Instrumentation and Controls

The instrumentation and control systems include fail-safe design. Instrumentation is industrial state of the art and is electronic with 4-20 mA dc signals. As part of routine maintenance and operation, calibration of instruments is performed by trained personnel.

The project Instrument Summary (Project C-27125) provides a complete list of instruments for the entire facility. Table 4.4-1 contains a list of the facility interlocks. Set point control is provided as discussed in the Configuration and Instrumentation Control Plan for TSCA Facility (5/88) and references.

Appendix I contains some detailed process and instrument diagram (P&ID) drawings and includes a reference list of other drawings.

Section 4.4.1 describes the instrumentation and control systems as they relate to the monitoring and protection facilities.

4.4 Operational and Control Features

This section describes the safety-related systems/features that are incorporated in the design of the incineration facility:

- Monitoring and Protection Systems
- Confinement Systems
- Ventilation Systems
- Process Waste Disposal Systems
- Criticality Control Considerations
- Fire Protection Systems
- Explosion and Pressure Relief Systems

4.4.1 Monitoring and Protection Systems

Instrumentation and controls are designed to ensure the efficient operation of the incineration facility and the prevention of hazardous conditions or unacceptable emissions. Instrumentation and control systems that are critical for the proper operation of the facility have redundant components (such as flow transmitters, temperature elements/transmitters, alarms, and sensors), and all instruments are of materials compatible with the operating conditions and environment. The controls ensure not only effective component performance but also the safety of continuing operations by monitoring critical variables. The 4-20 mA electronic instrumentation and control systems transmit a separate output signal to the data acquisition system for each monitored process variable. The instruments

supplying these signals maintain the required accuracy over the design range of the parameter measured.

Discussed below are the associated (1) control room, (2) the field-mounted instrumentation, (3) the tank monitoring provisions, (4) the oxygen monitoring systems, and (5) the interlocks for the various process equipment.

4.4.1.1 Control Room

The incineration facility is operated primarily from the control room in Building K-1435A. The control room includes two main panels and two programmable controller (PC) systems. The instrumentation and controls are arranged functionally on panel boards and on an operator console.

The panel boards contain all controllers, indicators, recorders, auxiliary relays, manual switches, and alarm annunciators for the various plant systems. The operating console/interface contains two cathode ray tubes to display operating information and alarm conditions. The information includes various process variable (tank level, kiln temperatures) and process variables trend and digital information (valve status and pump operations). A record station makes permanent copies of operating parameter values that result in alarms, complete with the alarm sequence and the time they occur. Relevant process information is transmitted directly to the data management computer system for permanent storage as required to meet regulatory and operational requirements.

4.4.1.2 Field-Mounted Instrumentation

The field-mounted instruments in the storage tank area are designed to prevent the field instruments from becoming a flame source in case of an electrical fault. These instruments meet

the requirements for a Class I, Division II area by intrinsically safe (energy-limiting) design and by intrinsically safe shields (aluminum/mylar type) for the signal wiring to other areas. Instrumentation housings (NEMA 4 rating) are fabricated to withstand corrosive conditions. All parts of the instruments in contact with the process are compatible with the process fluid or gas.

4.4.1.3 Tank Monitoring

Receiving tanks (T-201 through T-206), storage tanks (T-207, T-208, and T-209), feed tanks (T-305, T-306, and T-307), and waste drain tanks (T-301 and T-302) are monitored with level, temperature, and pressure devices. All tanks are equipped with remote/local level indicators, high/low level alarms, high/low temperature alarms, and high pressure alarms. Excepting the waste drain tanks, the tanks are equipped with high-level safety interlocks that automatically shut off the feed pumps to prevent overfilling. Also, pressure indicators are provided. Safety vents and rupture disks, as required by NFPA, are provided to prevent overpressurization.

4.4.1.4 Oxygen Monitoring Systems

Three oxygen monitoring systems are provided for the incineration facility: one for the drum handling enclosure, one for the shredder system, and one for the shredded product system.

The oxygen monitoring system for the drum handling enclosure is provided for personnel protection to prevent asphyxiation, which is an industrial hazard. This system prevents operator entrance to the enclosure unless the proper oxygen level is present. Two oxygen sensors, one (AIS-1373) in the non-PCB section and one (AIS-1374) in the PCB section, measure the oxygen content within the enclosure. Readouts for these instruments are

on the enclosure wall adjacent to the personnel access door and provide local indication of oxygen level, 0 to 20 percent by volume. These oxygen sensors are interlocked (I-44) to prevent the opening of the door if oxygen level is less than 19.5 percent. The oxygen monitoring system activates a light outside the enclosure adjacent to the access door. The light activates when the oxygen volume present is 19.5 percent or greater, allowing access into the drum handling enclosure.

The oxygen monitoring systems for the shredder and shredded product systems are components of the atmosphere control system and are described in Section 4.4.7.2.

4.4.1.5 Process Equipment Interlocks

Table 4.4.-1 summarizes the local fail-safe interlocks that are designed to control and monitor the process functions to prevent accidents or to mitigate their consequences.

Set point control is provided as discussed in the Configuration and Documentation Control Plan for TSCA Facility (5/88) and references.

Appropriate drawings contained in Appendix I depict the features of the interlocking systems and the instrumentation details.

Figure 4.4-1 schematically shows the general location of the process temperature sensors related to interlocks.

Table 4.4-1. Summary of process equipment interlocks for K-1435 incineration facility

1. High-high level interlocks. Signal for each tank (T-201 through -209, -305A, -305B, -306A, -306B, -307A, and -307B) shuts off respective pump during tank-filling operation and its "flow path proven" logic by linking the input signal with associated pump logic internally in the PC logic. Computer software verifies "correct flow path" for pump start permit. Limit switch input to PC develops flow path proven logic. PC outputs are used for pilot light and computer input to the MP-2000 alarm. Timer in PC inhibits alarm during respective agitator startup. Motor starter contact input to PC is used for pilot light and computer input.

2. High-level interlocks. Signal for each tank (T-201 through T-211, -305A, -305B, -306A, -306B, -307A, -307B, -601A, -602B, -603A, -603B, and -607) shuts off respective pump.

3. Low-low level interlocks. Signal for each tank (T-305A, -305B, -306A, -306B, -307A, and -307B) shuts off respective feed pump.

4. Low-level interlocks. Signal for each tank (T-201 through -210, -305A, -305B, -306A, -306B, -307A, -307B, -601A, -601B, -602A, -602B, -603A, -603B, and -607) shuts off respective agitator.

5. Agitator high-current interlocks. Signal for each tank (T-201 through -209, -305A, -305B, -306A, -306B, -307A, and -307B) shuts off respective agitator.

6. PC-developed pump start interlocks. Grinder pump P-303 can be started only if feed and return valves for one tank (T-306A or T-306B) are open to prevent mixing one tank's content with another. Grinder pump P-304 can be started only if feed and return valves for one tank (T-305A, T-305B, T-307A, and T-307B) are open. Computer software verifies correct flow path for pump start permits. Motor starter contact input to PC is used for pilot light and computer input.

7. Drum interlocks. Drum dumping operation can start only when door of enclosure is closed. Shredder is operable only when scissor doors of enclosure are closed and the shredder enclosure atmosphere has less than 5 percent oxygen.

Table 4.4-1. cont'd

8. Waste feed cut off interlocks. During startup and shutdown or during process upsets or mechanical equipment malfunctions, interlocks automatically stop all waste feed and natural gas systems and prevent their restart until rotary kiln is at proper operating conditions and the interlocks are manually reset. (Initiating process events are discussed in Section 4.4.7.1).

9. Incinerator low/high temperature interlocks. Temperature sensors (redundant) automatically shut off all waste feed streams to rotary kiln when a low temperature condition is detected in primary or secondary combustion chambers, or when the exit gas temperature from the secondary chamber is too high.

10. Quench chamber interlocks. Temperature sensors automatically shut off all burners and open safety relief vents when an excessively high gas temperature is sensed at the quench chamber discharge or when a low flow rate is detected for the fresh water makeup and emergency quench water.

11. Scrubbing solution interlocks. Indicators measuring pH have alarms that alert operator when the pH is out of tolerance, and respective pumps (P-501A, P-501B, P-520A, or P-520B) are shut off.

12. ~~Induced draft fan~~ interlocks. Instrument monitoring ~~vibration~~ levels of fan shaft alert operator when vibration is excessive.

13. Gas stack monitoring interlocks. Alarms for CO, O_2 (<3 percent) detect loss of system utilities, equipment failure, or excessive analyzer drift, alert operator, and shut off all waste feed if necessary after an adjustable time delay or immediately.

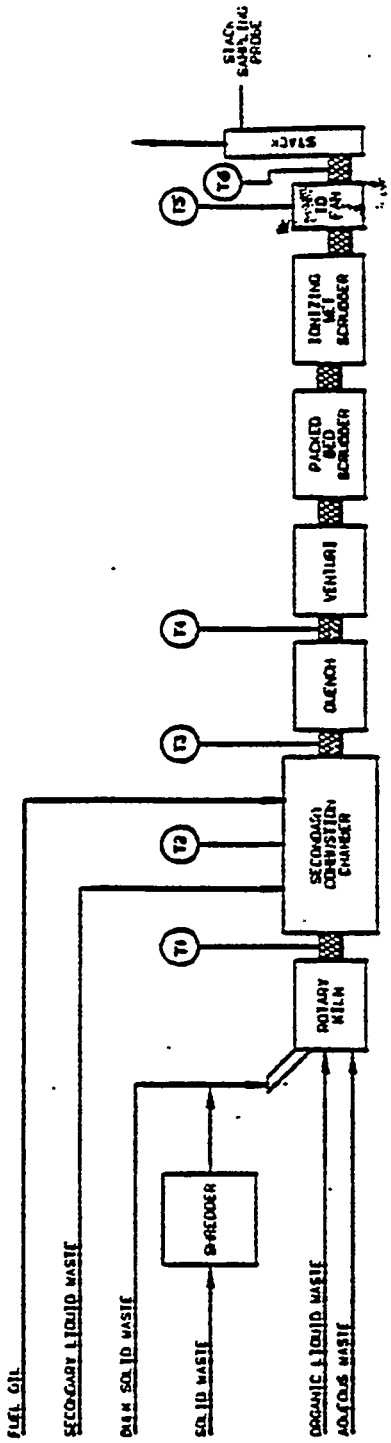

Figure 4.4-1. Temperature sensor locations for incineration and process gas cleaning systems

4.4.2 Confinement Systems

In this safety analysis report, confinement systems are defined as barriers and equipment that control against the release of hazardous materials to the environment. The process systems and components in the incineration facility are the primary confinement or containment barriers. The design of each system provides the capability for the system to maintain its integrity and operability as necessary for personnel and public protection. For further protection, secondary containment systems are provided for leaks and spills in the K-1435B PCB storage area, in the K-1435C non-PCB drum storage area and tank farm, and in the K-1435D incinerator area. The diked containment areas that are located outside collect rain water that must be sampled before it can be released. The secondary containment systems are described.

4.4.2.1 K-1435B PCB Drum Storage Area

The K-1435B PCB drum storage area is designed to promote drainage, and the containment system has sufficient capacity to contain 10 percent of the volume of the containers. The secondary containment system for the K-1435B PCB storage area consists of a 6-inch-high curb, a collection trench, and a sump. The 8-inch-wide grated trench slopes from a depth of 7 inches at the ends of the trench to a depth of 1 foot 5 inches at the sump. The valve on the sump is kept closed at all times during normal operations to contain any skills or leaks. Any spilled material collected in the sump is pumped into recovery drums or 55-gallon drums, which are sealed, labeled, stored, and later incinerated as drummed wastes. If necessary the trench and sump is then flushed with water, the sump valve opened, and the wash water released to the large collection sump. Contents of the large sump is pumped to a carbon adsorption system and/or to the neutralization facility for treatment.

The maximum capacity of the K-1435B secondary containment system is based on filling the area to a depth of 6 inches. The storage area is approximately 3,750 square feet, [107 x 40 (total) - 200 (drum unloader and dumping area) - 50 (forklift truck ramp) - 228 (thawing room) - 52 (interior curbing = 3,750 square feet]. An area of 1,105 square feet is taken by the storage capacity of 352 drums ($352 \times 3.14 \times 1^2 = 1,105$ square feet). The volume for storage area at a depth of 6 inches is $(3,750 - 1,105) \times 0.5 = 1,322$ cubic feet, or 9,888 gallons. The trench and the sump have a capacity of approximately 710 gallons. Thus, the volume of the secondary containment system is approximately 10,598 gallons. The maximum storage capacity is approximately 352 55-gallon drums, or 19,360 gallons. Therefore, the secondary containment system holds approximately 55 percent of the maximum storage capacity. The storage area is within the enclosed building; therefore, run-on of precipitation cannot occur.[1]

4.4.2.2 K-1435C Non-PCB Drum Storage Area and Tank Farm

Like the K-1435B PCB storage area, the K-1435C non-PCB drum storage area is designed to promote drainage. The containment system also has sufficient capacity to contain 10 percent of the volume of the containers. The secondary containment system for the K-1435C non-PCB storage area also consists of a 6-inch-high curb, a collection trench, and a sump. The 8-inch-wide grated trench slopes from a depth of 6 inches at the ends of the trench to a depth of 1 1/2 feet at the sump. The valve on the sump is kept closed during normal operation to contain any spills or leaks. Any spilled material is collected in the sump and disposed of in the same manner as that described for the K-1435B storage area.

The maximum capacity of the K-1435C secondary containment system is based on filling the area to a depth of 6 inches. The storage area is approximately 4,900 square feet, [45 x 120

(total) - 342 (dock leveler area) - 120 (forklift truck ramp) - 32 (interior curbing) = 4,900 square feet]. An area of 1,557 square feet is taken by the storage capacity of 496 drums (496 x 3.14 x 1^2 = 1,557 square feet). The volume of the storage area at a depth of 6 inches is (4,900 - 1,557) x 0.5 = 1,672 cubic feet, or 12,507 gallons. The volume of the trench and sump is 150 cubic feet, or 1,122 gallons. Thus, the volume of the secondary containment system is approximately 13,629 gallons. The maximum storage capacity is approximately 496 55-gallon drums, or 27,280 gallons. Therefore, the secondary containment system holds approximately 50 percent of the maximum storage capacity. This K-1435C storage area has a canopy-type roof that prevents rain from falling directly on the storage yard; therefore, run-on precipitation is minimal. Grading is such that no significant run-on enters these K-1435B and K-1435C storage areas. Also, the containment systems are sufficient to contain any rainfall or run-on that might enter these storage areas.[1]

All containers in both storage areas are inspected weekly for leaks and corrosion. If a container is found to be damaged or is in bad condition, either the content is transferred to a good container or the damaged container is placed in an overpack drum. These inspections minimize the possibility of spills or leaks resulting from breached containers. The trenches and sumps for both storage areas are inspected weekly for standing liquids.

Container management practices at ORGDP are designed to assure that wastes are handled in the safest manner possible.

The K-1435C secondary containment system also serves the tank farm. Any spills or leaks from tanks are collected in the same manner. In the event of a spill, the liquids collect inside the dike where they can be pumped into the appropriate tanks,

drums, or into trucks. After the spill has been cleaned up, the sump valves are opened and the same disposal procedure followed.

4.4.2.3 Incinerator Area

A diked unloading station is provided in the K-1435D incinerator area for transferring 50-weight-percent caustic from the transport truck to the 7,500-gallon storage tank. The diked area is sized to contain 5,000 gallons and has a 6-inch drain.

4.4.3 Ventilation Systems

Two air sweep (ventilation) systems are provided, one for the drum handling enclosure and one for the bulk solids conveyor system.

4.4.3.1 Drum Handling Air Sweep System

The air sweep system for the drum handling enclosure vents any vapors generated by the drum dumping process and includes an exhaust fan and a carbon canister. The exhaust fan (F-415) draws ambient air into the enclosure through two air inlet grills, one on the east enclosure wall near the enclosure bottom and one on the west enclosure wall near the enclosure bottom. Exhaust air and vapors pass through ducts (12 inches for non-PCB and 16 inches for PCB) to the exhaust fan. The fan discharges to the carbon canister (V-415) that scrubs any vapors in the exhaust air before discharging the air to the atmosphere. The fan is belt driven at 1,260 rpm by a 5-hp electric motor. It is operated from the local control panels at the drum handling enclosure but may be stopped from the main panel. The carbon canister is rated at 3,000 acfm at 70°F, providing a 0.7-second residence time. Differential pressure indicators monitor the exhaust system performance.

The drum handling air sweep system is designed to sweep 2,400 acfm at 5-inch water column static pressure at 70°F. The

system is designed in accordance with the latest industrial guidelines (Industrial Ventilation Handbook) and is based on design parameters and criteria for trichloroethylene because of its rapid vaporization:

Threshold limit value/time weighted average (TLV/TWA = 50 ppm
Short term exposure limit (STEL) = 200 ppm
Lower explosive limit (LEL) = 12.5 percent (by volume)
Upper explosive limit (UEL) = 90 percent (by volume)
Vapor density = 4.54 compared to air at standard temperature and pressure
Liquid density = 1.465 compared to water at standard temperature and pressure
Molecular weight = 131.38 (C_2HCl_3)
Operating vapor concentration below 25 percent of LEL in the entire enclosure by using the air sweep
Not more than one pint of C_2HCl_3 lost for each 55-gallon drum dumped
Ventilation rate greater than 20 air changes an hour
Air at 500 fpm or greater through air inlet damper
Minimum 100 fpm through loading door

The drum handling area outside the enclosure is also ventilated. Ten roof ventilators placed along the ridge line of Building K-1435B provide 100 feet of continuous ventilation, and the building has a two-foot open space at floor level. This building ventilation system provides sufficient natural ventilation to prevent concentration of hazardous airborne contaminants in excess of allowable limits established by the American Conference of Governmental Industrial Hygienists (ACGIH). However, the area outside the drum handling enclosure normally is not exposed to large quantities of vapors because drum deheading occurs within the enclosed area.

4.4.3.2 Bulk Solids Conveyor Air Sweep System

The air sweep system for the bulk solids conveyor system vents any fume-laden air and includes an exhaust fan and a carbon canister. The exhaust fan (F-416), rated at 2,400 acfm at 5-inch water column, draws air through the conveyor enclosures and ducts the fume-laden air to the carbon canister (V-416) for adsorption scrubbing before discharging the air to the atmosphere. The fan is belt driven at 2,900 rpm by a 5-hp electric motor. The fan is operated from a local start/stop pushbutton station but it may also be stopped from the main control panel.

The equipment ventilation systems are designed to meet fire protection requirements for explosive limits (LEL/UEL). This design also satisfies industrial hygiene requirements for exposure limits (TLV/STEL) to hazardous materials and for system purging to prevent oxygen deficiency.

4.4.4 Process Waste Disposal Systems

The incineration process generates gaseous, liquid, and solid wastes. Details of waste management are presented in the Environmental Impact Statement.[2] These wastes, their sources, and the control methods are summarized in this section.

4.4.4.1 Gaseous Effluents

Estimates of the air emissions of the fifteen regulated and several nonregulated pollutants are based on material balances and equipment design, or on data from analogous cases, for a scheduled operating rate of 7,300 hours a year. During normal operation of the incinerator facility, emissions originate from four general sources: receiving and storage tanks, drum unloading hoods, stack, and miscellaneous leaks. Under abnormal conditions, emissions may originate from the emergency vent stack (CA-501) or from the secondary combustion thermal relief stack (CA-515). The majority of the emissions originate from the stack (CA-535), but some fugitive emissions originate from the tank farm and from the drum unloading hoods.

Fugitive organic emissions are generated from unloading and transferring the volatile solvents that comprise about 15 percent of the liquid waste feed. Since the majority of the liquid waste are nonvolatile lubricating oils, the fugitive emissions related to their handling and storage are expected to be of low concentrations and widely distributed over the tanks. Organics, principally halogenated solvents, are released from the tank farm. The system design is such that essentially no other fugitive emissions are contemplated.

As described in Section 4.3.6, the process gas cleaning system neutralizes and controls the off-gas effluents from the combustion systems. The operating conditions and the equipment designs maximize the combustion efficiency and reduce the products of incomplete combustion to a minimum. After the off-gas treatment, air pollutants contained in the combustion products released from the stack can be divided into three categories: products of incomplete combustion, particulates, and acid gases. Table 4.4-2a summarizes these toxic chemical emissions to the atmosphere, and Table 4.4-2b summarizes the radionuclide atmospheric emissions.[3]

All radionuclide quantities shown in Tables 4.4-2b and 4.4-3b, except for Tc and U, are estimated from (1) the quantities of materials used in animal research and (2) the maximum amounts that could occur in the stack and scrubber blowdown stream. Animal carcasses and bedding material are incinerated and are fed in batches using the bottle drop access. Appropriate procedures and limits are being developed for handling materials containing radionuclides. Also, waste stream characterizations, acceptance criteria, and possible transuranic content are being reviewed. Documents will be changed as necessary.

Table 4.4-2a. Atmospheric emission summary: toxic chemicals

Pollutant	Annual[a] Average Kg/hr	24 hour Maximum Kg/hr	Source[b]
NO_x	1.9	4.9	1
Particulates	1.3	1.8	1
HCl	0.45	0.82	1
VOC	0.18	0.45	1
CO	1.2	1.7	2
P_2O_5	Max.[a]	0.06	2
SO_2	0.23	0.34	1
HF	0.005	1.3	1
Cl_2		<0.007	2
Pb	Max.[a]	1.4×10^{-3}	2
PCB	Max.[a]	6.8×10^{-5}	2
HCB	Max.[a]	1.3×10^{-6}	2
Furans	Max.[a]	4.4×10^{-8}	2
Dioxins	Max.[a]	2.8×10^{-9}	2
Beryllium	Max.[a]	9.7×10^{-11}	2
Fugitive VOC	Max.[a]	0.08	2
Hg	Max.[a]	8.9×10^{-3}	3

[a]The maximum 24-hour emission rate was used as an estimate for the annual average emission rate.

[b]Sources:
1. State of Tennessee Air Permit Values
2. Estimates based on waste characterization and incinerator design performance.
3. Estimates based on incineration of 6350 metric tons of soils containing 28 ppm Hg in a 2-year period.

Table 4.4-2b. Atmospheric emission summary: radionuclides

Isotopes	uCi/yr	Source
^{3}H	1,580,000	4
^{14}C	183,000	4
^{32}P	205,000	4
^{35}S	76,000	4
^{36}Cl	90	4
^{45}Ca	9,000	4
^{51}Cr	11,000	4
^{57}Co	920	4
^{65}Zn	460	4
^{99}Tc	394,000	5
^{125}I	291,000	4
^{131}I	51,000	4
U	15,000	6

Sources:

4. Assumes worst-case atmospheric release. Total isotope input is postulated to be released to atmosphere.

5. Estimate based on incineration of 9100 metric tons of waste per year with an average ^{99}Tc concentration of 0.1 ppm and removal efficiency of 97.3% in the off-gas treatment system.

6. Estimate based on release of 2.7×10^{-3} Kg/hr of U. The specific activity of 1% enriched U is 7.81×10^{-7} Ci/g, corrosponding to a removal efficiency of 96.4% in the off-gas treatment system.

4.4.4.2 Liquid Effluents

Liquid discharges from the incineration facility are collected, checked, treated by activated carbon adsorption if necessary, and transferred off the incinerator site. Figure 4.4-2 schematically depict the liquid waste material flow and the aqueous waste management system. Two sources generate these aqueous wastes: (1) scrubber blowdown and (2) fire and rain water.

The major aqueous effluent is the scrubber blowdown. The scrubber blowdown contains salts from acidic gas removal process, ash particles, and possible trace organics that are not completely oxidized. Tables 4.4-3a and 4.4-3b list the expected composition of the scrubber water. Trace quantities of organics may also be present in the scrubber blowdown, principally low-molecular-weight organic acids and aldehydes. The combustion conditions in the incinerator essentially eliminate PCBs or other high-molecular-weight organics. Citing the environmental impact statement,[2] data from a test burn of PCBs in a similar incinerator showed no detectable PCBs (<0.007 mg/l) and 0.19 mg/l total organics in the scrubber water and results of testing of a variety of incinerators burning a variety of wastes showed no organic waste constituents in the scrubber water.

The scrubber blowdown flows into one of two 30,000-gallon purge water tanks (T-602A and T-602B). At the end of each day (24-hour cycle), the flow is switched to the other tank and the filled tank is sampled and analyzed. Water with an acceptably low organic content is pumped (P-602A or P-602B) once each workday to an existing neutralization facility, where it combines with aqueous wastes from other facilities. If the neutralization facility is unable at the time to accept the purge water, the water is pumped into one of two 40,000-gallon surge tanks (T-603A and T-603B) for temporary storage. If the scrubber water

Table 4.4-3a. Scrubber blowdown composition: toxic chemicals

Parameter	kg/hr
Chloride	87.31
Fluoride	3.76
Sulfate	0.45
Phosphate	2.13
Sodium	56.56
Lead[a]	.032
Beryllium[a]	2.0×10^{9}
Total Dissolved Solids[a]	159
Total Suspended Solids[a]	49[b]

[a]Modified numbers since EIS Supplement.

[b]90% suspended solids are removal in purge water tanks, leaving 4.9 kg/hr going to the neutralization facility.

Table 4.4-3b. Scrubber blowdown composition: radionuclides

Isotopes	uCi/yr	Source[a]
^{3}H	1,580,000	1
^{14}C	183,000	1
^{32}P	206,000	1
^{35}S	76,000	1
^{36}Cl	90	1
^{45}Ca	9,000	1
^{51}Cr	12,000	1
^{57}Co	920	1
^{65}Zn	460	1
^{99}Tc	14,200,000	2
^{125}I	291,000	1
^{131}I	51,000	1
U	416,000	3

[a]Sources:

1. Assumes worst case aquatic emission. Total isotope input is postulated to be released in liquid effluent.

2. Estimate based on incineration of 9100 metric tons of waste per year with an average Tc^{99} concentration of 0.1 ppm and removal efficiency of 97.3% in the off-gas treatment system.

3. Based on final design of 0.073 kg/hr of U, present as uranium oxides. The facility is assumed to operate for 7300 hr/yr. The specific activity of 1% enriched U is 7.81×10^{-7} Ci/g, corresponding to a removal efficiency of 96.4% in the off-gas treatment system.

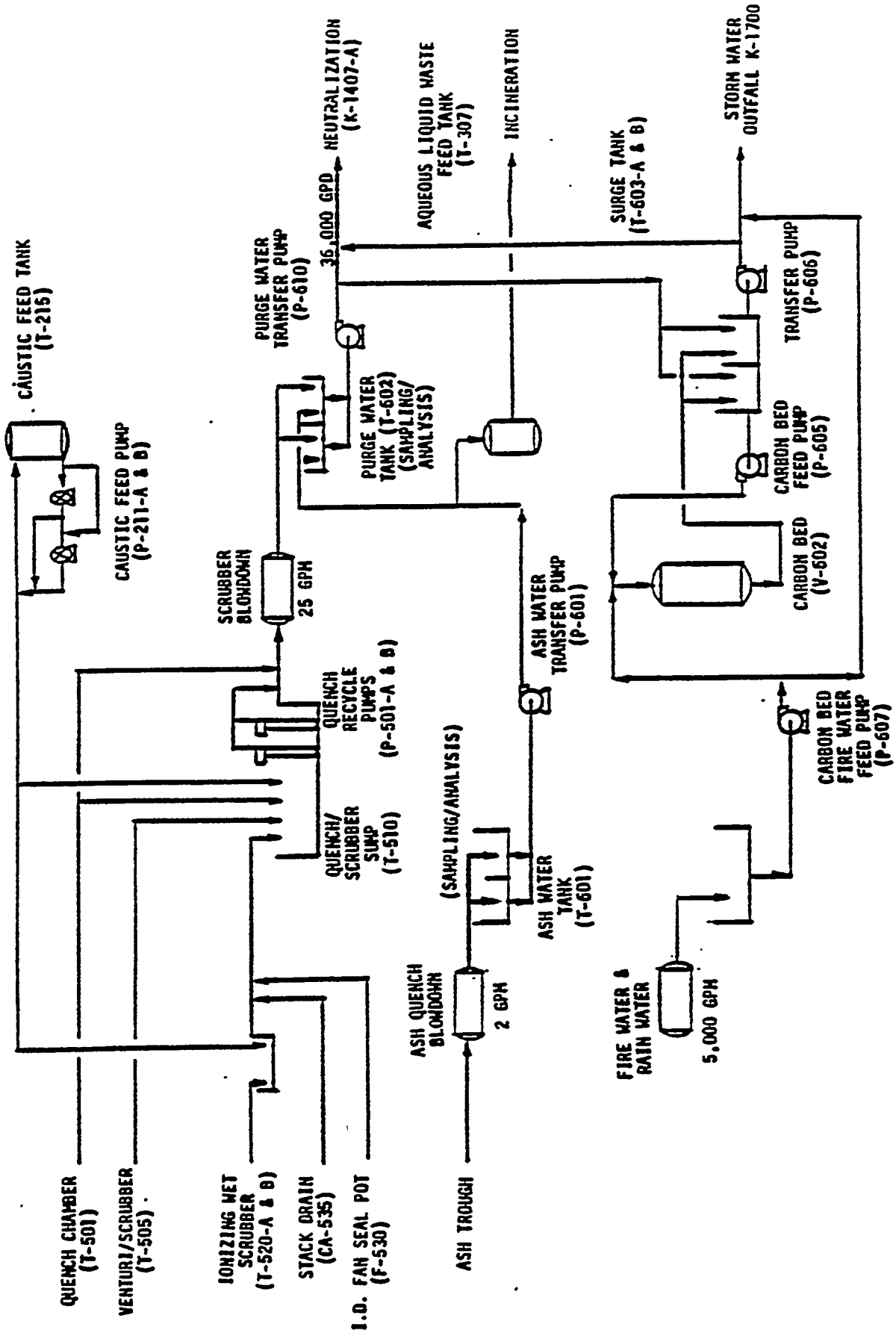

Figure 4.4-2. Liquid and aqueous waste management system

contains unacceptable organic contamination, it is pumped also to one of the surge tanks.

The unacceptable water is then pumped (P-605A or P-605B) through one of two carbon bed adsorbers (V-602A and V-602B) back to the other surge tank. The carbon-purified water is then analyzed and, if acceptable, transferred to the neutralization facility.

The ash quench blowdown is overflow water from the ash trough. This water contains suspended and dissolved solids from the ash and may contain some organics leached from incompletely burned residue. However, it is expected that the operating temperature and solids residence time in the kiln are sufficient to produce a residue that is essentially free of any organic materials, including PCBs. The overflow water from the ash trough flows into one of two ash water tanks (T-601A and T-601B). As with the purge water tanks, at the end of each 24-hour cycle, the flow is switched to the other tank and the filled tank sampled and analyzed. Acceptable water is pumped (P-601A or P-601B) to one of the purge water tanks and combined with the scrubber water. The composition of the two streams is expected to be similar. Ash trough water containing unacceptable organic contamination is pumped to the aqueous liquid waste feed tanks (T-307A and T-307B) for burning in the kiln.

Fire and rain water from the areas flows by gravity into the 30,000-gallon fire water collection tank (T-607). Uncontaminated water is discharged without treatment to the neutralization facility or discharged to K-1700 after testing. Water from the diked areas may contain traces of organics picked up from leaks or spilled waste in the areas. If analyses reveal unacceptable

organic contamination, the water is pumped (P-607A or P-607B) through carbon bed adsorbers to one of the surge tanks for sampling before discharged to the neutralization facility. Contaminated water may be pumped to the aqueous liquid waste feed tanks (T-307A and T-307B) for burning in the kiln.

4.4.4.3 Solid Effluents

Additionally, solid wastes are generated during the incineration process: (1) ash from the kiln and (2) solids from strainers/filters and spent carbon. Figure 4.4-3 schematically depicts the solid waste management system.

The major solid waste is the kiln residue that falls out of the rotary kiln into a water-filled ash trough and is conveyed into a portable container. The solids residue results from dirt, clay, and shredded metal fed into the kiln plus unidentified ash materials from the combustion of liquids and solids. Since about 90 percent of the noncombustible material fed to the kiln is expected to be contaminated dirt and about 5 percent shredded steel drums, the composition of the residue should be similar to that of dirt enriched with iron and small quantities of other unidentified metallic oxides from wastes. The small quantity of uranium in the dirt is expected to result in about 60 mg of uranium a kg of dry ash, amounting to about 68 kg (150 lb) a year in about 1,140 metric tons (1,250 tons) of dry ash or 2,280 metric tons (2,500 tons) of wet ash. The ash is expected to be essentially free of hazardous/toxic organics, including PCBs.

The kiln residue is analyzed. If the PCB concentration is unacceptable, the residue is recycled to the kiln for incineration. If the PCB concentration is acceptable, the waste is drummed and transferred to a retrievable storage area. Any remaining PCB is relatively immobile because of its low solubility in water and absorption characteristics. Two toxic

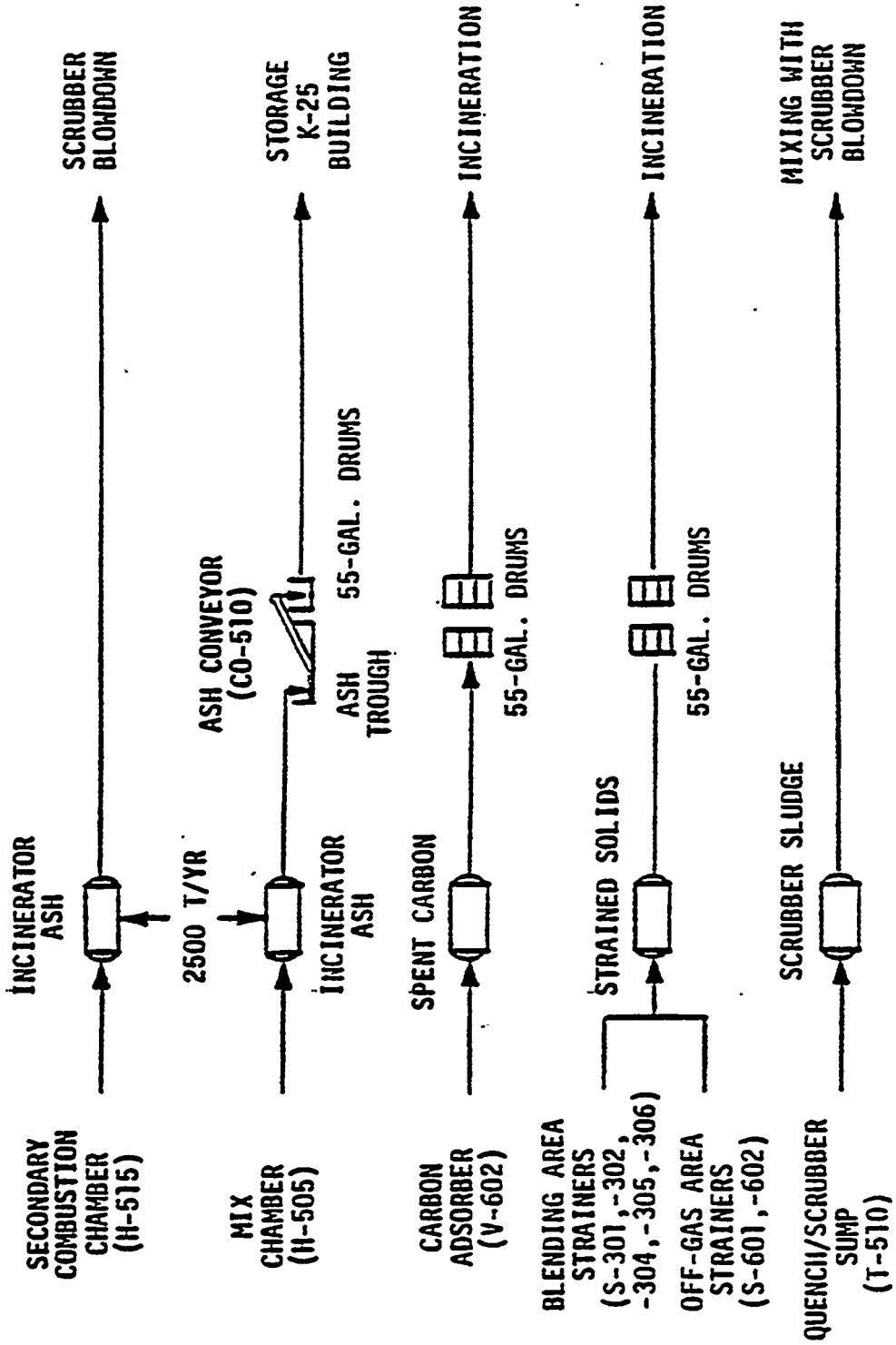

Figure 4.4-3. Solid waste management system

metals, lead and beryllium, that could be low-level constituents of the residue are also immobilized in the soil. Routine chemical analysis of the ash ensures against inadvertent inclusion of unacceptable levels of toxic organics in the material going to the landfill.

Solid wastes from strainers/filters and spent carbon are also analyzed for PCB content. If the wastes contain PCBs, they are incinerated; if not, they are drummed and processed according to established procedures.

4.4.5 Criticality Control Considerations

Criticality Safety Analyses/Approvals (CSAs)[4] govern the acceptance and handling of uranium at the incineration facility. Any uranium-contaminated waste is accepted only after verification of its content as certified on the shipping manifest and only if it meets the criticality analysis requirements (no limit in uranium content for less than one percent ^{235}U assay or less than 5 ppm uranium content with assays of one percent ^{235}U or greater). The waste shipments will be sampled when they arrive at the TSCA incinerator facility. The samples will be analyzed for uranium content and assay to verify the shipping manifest. The waste shipments include bulk liquids, solids, and sludges.

When feeding wastes containing uranium of one percent or greater, depleted uranium oxide (0.3 percent assay) will be blended with the higher assay material. Blending this higher assay material with the depleted uranium will control the composite uranium assay to less than one percent. The criticality safety personnel have developed curves to determine the required amount of depleted uranium that must be blended with the higher assay waste feed. A sampling and analysis program has also been developed to analyze the two effluent streams, the ash

and the blowdown water, to measure the effectiveness of the blending operation and to preclude an accumulation of material with one percent or greater ^{235}U.

Administrative controls (Section 4.5) pertain to criticality monitoring and prevention.

4.4.6 Fire Protection Systems

Fire protection systems are provided as accident mitigating measures throughout the incineration facility:

- Entire facility

The entire facility is surrounded with a 10-inch loop with four hydrants supplied from two tie-ins to the existing plant underground fire water system. Flow tests on the underground system indicate that a flow of 8,000 gpm is available at a residual pressure of 20 psi. Static pressure in the area is over 133 psi.

Portable fire extinguishers are provided in accordance with the requirements of NFPA-10 to control any incipient fires.

Fire alarm pull boxes are installed throughout the area.

- Building K-1435A

The K-1435A Control Building has a wet-pipe sprinkler system that meets the requirements of the pipe schedule for Ordinary Hazard Occupancy established in NFPA-13.

- Building K-1435B

The K-1435B Drum Handling Building has a dry-pipe sprinkler system that meets the requirements of the Extra Hazard Pipe Schedule established in NFPA-13. Sprinkler heads will be extended from this system into the drum handling enclosure.

- Tank Farm, Drum Unloading/Storage Area, and Tanker Unloading Station

The tank farm, drum unloading and storage area, and tanker unloading station have a two-level fire detection system. The first level consists of ultraviolet detectors, is unzoned, and is arranged to signal the ORGDP Fire Department. The second level system is zoned and trips the automatic suppression system. This second level consists of a pilot head system.

The tank farm, drum unloading and storage, and tanker unloading station have an automatic water deluge system with provision for manual injection of foam into the water supply. This system is divided into four zones and is hydraulically designed for a 0.3 gpm/ft^2 density. The foam is suitable for both polar and non-polar solvents. This foam system also supplies two standpipes, one located near the tank farm and the other near the drum handling area.

The storage tanks are provided with a nitrogen blanket. In the event of the loss of nitrogen blanket at one or more tanks, an alarm is transmitted to the control room in Building K-1435A.

Flammable and combustible liquid storage in tanks and drums meet the requirements of NFPA-30.

Additionally, the support legs of the tanks in the tank farm area have fire-retardant insulation to prevent structural weakening and collapse in case of a fire. This material provides a three-hour protection rating in accordance with ASTM E-119.

- Rotary Kiln

The rotary kiln is equipped with industrial combustion controls and safeguards that meet applicable NFPA codes and Factory Mutual standards. Appendix D summarizes Factory Mutual's fire protection review. The June 1986 Factory Mutual Research report notes that the facility plans were reviewed for fire and explosion hazard and protection; it was found that the facility was generally well protected. Combustion conditions such as temperature (above 1400°F), oxidizing atmosphere throughout, air control, and fuel control are included in fire and explosion prevention measures.

4.4.7 Explosion and Pressure Relief Systems

Standard industrial explosion prevention and pressure relief systems such as nitrogen blanketing of tanks, high-pressure rupture discs on tanks, and flame arresters, are designed into the incineration facility. Additionally, the incinerator itself is designed to meet the requirements of the applicable NFPA codes and Factory Mutual standards; some standard safety controls/features that can prevent an explosion or mitigate the consequences include the following:

- Purge ventilation prior to operation (Preventilation purging is addressed in the operating procedures.)
- Sufficient ventilation during operation (F-530 induced draft fan)
- Excess temperature protection (excess temperature limit switches of the fail-safe type)
- Explosion relief vents (CA-501 emergency vent stack and CA-515 thermal relief stack)
- Auxiliary interlocks
- Combustion safeguards and interlocks, including safety shutoff valves.

! ɔperability of these industrial controls/features is
ed by preoperational testing. Routine inspections and tests
e continued operability.

The following systems are also designed to prevent
sions or mitigate their consequences and warrant discussion:

- Automatic shutdown system
- Atmosphere control system
- Blowout panels

7.1 Automatic Shutdown System

In addition to continuous process monitoring (indication,
rding, alarms) and control, the incineration facility is
ished with a master interlock and shutdown system that
matically shuts off the waste feed or shuts down both the
ustion systems and the gas cleaning system in a safe
manner in response to a major process upset condition
quipment malfunction.

Controlled access to devices that affect control logic is
ided. The programmable logic controller (PLC) used to
tor tank farm valve limit switches and the one used to
rol incinerator processes are memory protected using a key
ch as well as password protected. These PLCs do not require
tional programming once the user has established optimum
ating strategies.

The selected control system used to interface with the
nerator PLC is a conventional microprocessor-based
ributed control system. The burner management system logic
control circuitry is hard-wired for safety in meeting NFPA
FM requirements, and the conventional control system devices
used for process operations. There is less operator access
h ntrol circuitry in this control system than in

traditional panel boards controllers. A programming box (PB) is required to configure controllers but is used only by certain individuals, and the hook-up is not available unless troubleshooting is required. Password protection is also provided to control access to this control system.

Major equipment items and support systems are provided with a two-position selector switch, "auto/manual" on the main control panel. In the "auto" position, interlock and permissive conditions are activated into the power, control, and instrument circuits and loops. In the "manual" position, interlock and permissive conditions are bypassed and local operation of an equipment item is possible. The exception to this is the combustion system and flame supervision program; interlock and permissive conditions for this system cannot be bypassed. Normally, operation of the facility should occur only with the selector switches in the "auto" position.

Waste feed shutdown, total unit shutdown, and total system shutdown are initiated on the following events.

<u>Waste Feed Shutdown</u>

Liquid Waste Feed

Waste feed shutdown to the primary combustion chamber is initiated instantaneously on occurrence of any one of the following events:

- "Primary Combustion Chamber Temperature Low" TAL-900
- "Stack Gas Monitoring System Fault" SGM-1 or SGM-2

Waste feed shutdown to the secondary combustion chamber is initiated instantaneously on occurrence of any one of the following events:

- "SCC Temperature Low" TAL-1000
- "Stack Gas Monitoring System Fault" SGM-1 or SGM-2

Shredded Solids Feed

Shredded solids feed shutdown to the weigh hopper is initiated instantaneously on occurrence of any one of the following events:

- "Shredded Product System Oxygen (O_2) High" AIS-1371
- "Shredder System Oxygen (O_2) High" AIS-1366 or AIS-1368

Total Unit Shutdown

Primary combustion chamber unit shutdown is initiated instantaneously on occurrence of any one of the following events:

- "Primary Auxiliary Burner BRN-502 Failure"
- "Primary Combustion Chamber High Temperature" TAH-900
- "Rotary Kiln Rotation Failure" SAL-910

Total System Shutdown

Total system shutdown is initiated instantaneously on occurrence of any one of the following seven events:

- "I.D. Fan F-530 (or motor) Failure" XAHH-1261
- "Quench Chamber High Temperature" TE-1201
- "SCC Auxiliary Burner BRN-517 Failure"
- "Primary Combustion Air Blower F-501 Failure" PSL-1901 or PSL-1921
- "SCC Combustion Air Blower F-516 Failure" PSL-1951 or PSL-1961
- "Quench Chamber Process Water Low Flow" FAL-1110
- "Quench Chamber Recycle Water Low Flow" FAL-1150

Specific initiating events for the combustion system interlock and shutdown and for the total system interlock and shutdown are described in Appendix B. Control logic flow sheets are shown in Appendix J and electrical schematic diagrams are presented in Appendix K.

4.4.7.2 Atmosphere Control System

The atmosphere control system maintains an oxygen-deficient atmosphere for the shredder system, the shredded product system, and the shredded product conveyor system to provide explosion prevention. The atmosphere control system includes oxygen monitoring systems and a nitrogen inerting system.

The shredder system is equipped with two oxygen monitoring sensors (AIS-1368 and AIS-1366) interlocked (I-38 and I-39) into the control circuit that prevents shredder operation unless the oxygen concentration both above and below the shredder cutting heads is below 5 percent oxygen volume. The shredder area is also purged with nitrogen introduced from the shredded product system enclosure.

The shredded product system is equipped with oxygen monitoring sensors (AIS-1370, AIS-1371, and AIS-1372) interlocked (I-43) into the control circuit that prevents operation of the shredded product conveyor and shredder unless the oxygen concentration is below 5 percent oxygen volume within the hopper, at approximate midpoint of conveyance system, and close to the weigh bin equipment/shredded product interface.

The shredded product conveyance system is also equipped with a nitrogen inerting system that provides an oxygen-deficient atmosphere (less than 5 percent oxygen) within the shredded product conveyor enclosure. The nitrogen inerting system includes nitrogen flow switches which are interlocked (with the oxygen monitor) to prevent operation if nitrogen flow is not

sufficient. A nitrogen back-up system will supply nitrogen to the shredded product hopper/conveyor system.

The system equipment included to prevent operator exposure to an oxygen-deficient atmosphere in the shredder and shredded product areas consists of the following. Blowers are provided for pre-maintenance purging; drum dump access door and bulk solids slide gate can be opened for maintenance. Five absolute gas analyzers (oxygen sensors) are fixed in place with remote gauge indicators. Access interlocks prevent an operator from entering an oxygen-deficient atmosphere during normal operation of the shredder equipment.

Figure 4.4-4 shows the atmosphere control system in relation to the drum handling enclosure and the approximate locations of the oxygen sensors for both the drum handling enclosure and the shredder and associated systems.

4.4.7.3 Blowout and Pressure Relief Panels

Two explosive blowout panels are installed in the drum handling enclosure. Each panel is 5 feet by 5 feet and has a pressure rating of 30 lb/ft^2 (0.2 psi). However, the building can withstand a pressure of 300 lb/ft^2 (2.1 psi). The pressure rating for the shredded product (S.P.) conveyor window (east wall) is 350 lb/ft^2 (2.4 psi) and for the S.P. hopper panels (west wall) about 2 psi. Three additional engineered pressure relief panels will be installed in the S.P. conveyor system (1.5 psi, 5 cu.m. rating).

4.4.8 Radiation Monitoring

Monitoring for radioactive contamination consists of following established ORGDP regulations and procedures for contamination and radiation control. All new processes must be designed to meet the International Commission on Radiological Protection (ICRP) 30 guidelines. Health Physics personnel classify areas involving uranium and institute appropriate air monitoring programs. These programs ensure that radiation

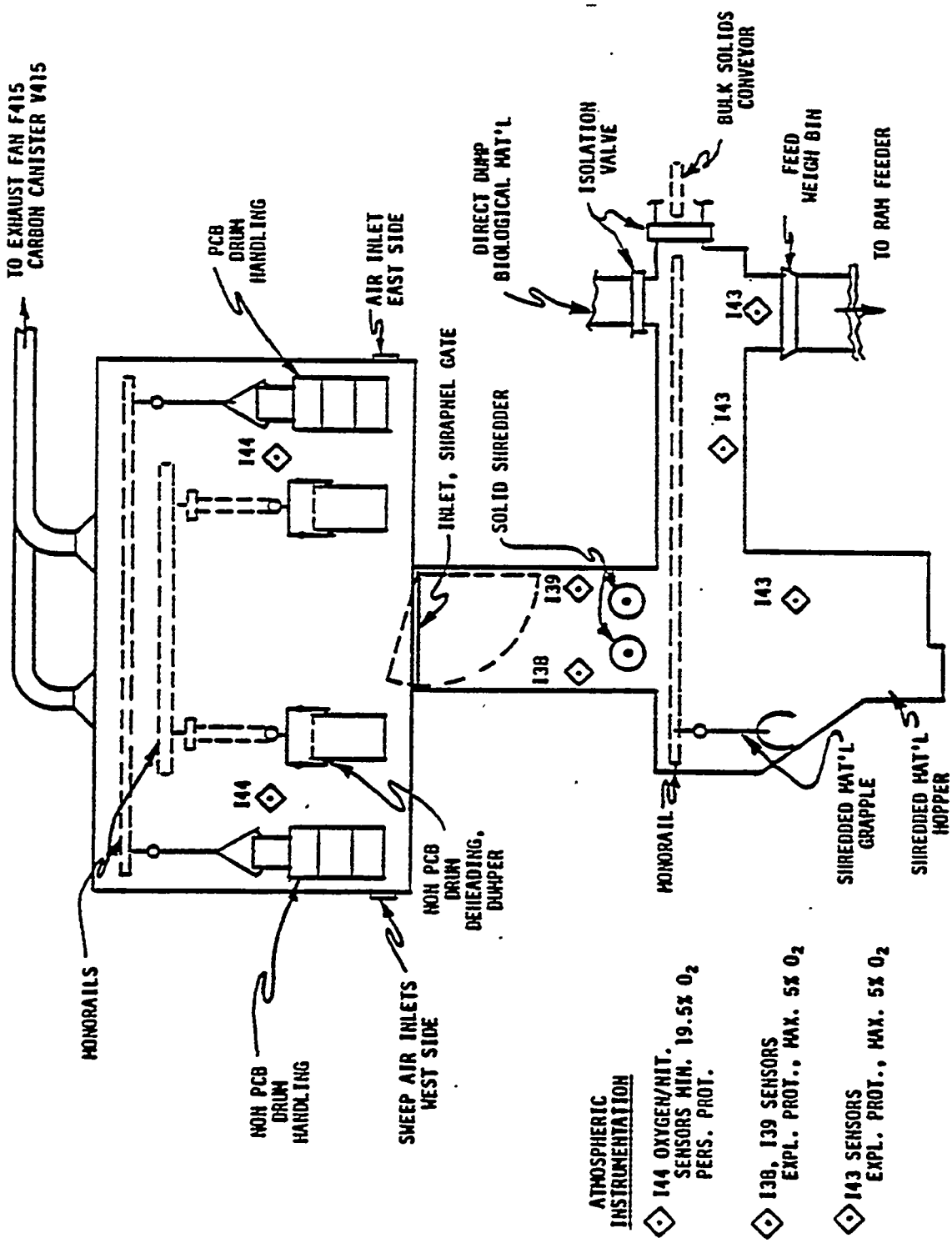

Figure 4.4-4. Atmosphere control system for shredder systems

ı ıre levels are maintained within the standards established ı Standard Practice Procedure B-394, which is consistent with DE Order 5480.1, Chapter XI. Work places at the TSCA facility hich have the potential for airborne exposure of workers will be dentified. Stationary air samplers will be placed in these reas. An air sampler consist of a GAST brand vacuum pump alibrated to pull air at 20 liters/minute through a millipore ilter of .8 micron thickness. The filters will be exchanged on regular basis. Normally, the filters are exchanged daily. The ollected filters will be analyzed by the ORGDP Process Support ivision for the purpose of identifying radionuclides present and neir concentrations. From this data, the health physics group an calculate a work area airborne concentration. However, this oncentration is not necessarily indicative of the breathing zone oncentration. Dupont personal air samplers will be used on a eriodic basis to augment the at-large data.

References for 4.4

. RCRA Part B Permit Application for K-1435 PCB/Hazardous Waste Incinerator, Martin Marietta Energy Systems, Inc., Oak Ridge, Tennessee, April 1985, and May 1986 revisions.

. Final Environmental Impact Statement, Incineration Facility for Radioactively Contaminated Polychlorinated Biphenyls and Other Wastes, DOE/EIS-0084, United States Department of Energy, Oak Ridge, Tennessee, June 1982.

. Analysis of Environmental Significance Resulting from Changes in the K-25 Toxic Substance Control Act Incinerator Design and Waste Streams since Issuance of the Final Environmental Impact Statement, Oak Ridge National Laboratory, Health and Safety Research Division, Oak Ridge, Tennessee, August 16, 1985.

. RCRA/PCB Incinerator, Criticality Safety Approvals: Potentially Contaminated Organic Liquids, CO-TSCA-01, June ı, 1986. Potentially Contaminated Solids, CO-TSCA-02, July ı8, 1986.

4.5 Administrative Controls

Administrative controls are defined as "procedural mechanisms which require action by personnel rather than by equipment to perform a function in conjunction with, similar to, or in place of a safety system.". The only potential accident that would require administrative controls as preventive or mitigative measures is nuclear criticality. Nuclear criticality is not addressed in detail in Section 5 as a potential accident scenario; however, the ORGDP is currently operating under an approved OSR (K/P-6807, ORGDP Criticality Monitoring and Prevention, April 1, 1985) in which the conditions of approval outlined in Criticality Safety Approval (CSA) documents are designated as administrative controls. Requirements in that document will also apply to the K-1435 incineration facility. In addition, the Operational Safety Requirements for the K-1435 facility (K/P-6850) will apply.

Radiation monitoring instruments would detect excessive radiation which would result from a criticality incident. The Radiation Instrument Cluster which consists of three independent radiation sensors is located in the Foam House along with the Nitrogen back-up horn control cabinet complete with a N_2 horn and nitrogen cylinders. The Evacuation Radiation Alarm Relay Cabinet which is also located in the Foam House controls four remotely located air horns and beacons. One air horn is located in a central location with each building/area (K-1435A, B, C, and D) and one beacon on each outside corner of the building complex.

5. ACCIDENT ANALYSIS

5.1 Introduction and Approach

The accident analysis effort for the K-1435 Incineration Facility considers three areas that must meet the general DOE safety requirements: release of radioactive materials, release of toxic or other hazardous materials, and process-unique safety problems that could result in adverse health and safety consequences primarily to the operating staff.

5.1.1 Hazards

The principal accidents involve (1) spills or release of toxic/radioactive materials (with resultant personnel exposure and environmental insult) from improper handling of material/equipment, (2) spills or release of toxic materials from equipment failure/malfunction, and (3) fire/explosion resulting from an initiating event.

5.1.2 Objectives

This section systematically identifies the hazards associated with the incineration facility, postulates accident scenarios involving these hazards, evaluates the probabilities and consequences of accident occurrences and the sufficiency of preventive and mitigative measures, considers the accidents according to potential risks, and evaluates in more detail the accident scenarios that are judged as having a significant risk potential. The accident analysis and related information are presented as follows:

- System Safety Adequacy for Normal Operation
- Abnormal Conditions and Accidents
- Natural Phenomena
- Impact on Adjacent Operations
- Impact on Occupational Health and Safety
- Impact on Public Health

5.2 System Safety Adequacy for Normal Operation

The design of the incineration facility and the plan for its operation include a number of features that reduce the likelihood of accident situations or upset conditions and limit the potential impact of such ions should they occur. This section examines the adequacy of design and the method of operation under normal conditions as they relate to the health and safety of the employees and of the public.

Section 5.3 considers abnormal conditions and accidents.

The incineration facility includes several systems/features that combine to reduce the probability of accidents and to minimize the risk associated with the operation of the facility. These systems/features pertain to the following and are only summarized here with appropriate references to Section 4:

. Radiation Safety
. Hazardous or Toxic Material
. Criticality Safety
. Fire Safety
. Explosion or High Pressure
. Safety-Related Monitoring
. Engineering Controls
. Administrative Procedures
. Spill Prevention Control & Countermeasures
. System Testing

5.2.1 Radiation Safety

Radiation considerations (Section 4.4.8) include the handling of some uranium-contaminated wastes, along with trace quantities of other radioactive nuclei, in the incineration facility. During normal operating conditions, the containers, vessels, and associated piping provide adequate containment and shielding of the radioactive wastes. Shielding is not a concern with uranium; however, small amounts of beta-emitting elements may be present from daughter products of uranium decay. The carbon steel containers, vessels, and piping are adequate for beta shielding. Appropriate procedures and limits are in use for handling materials containing radionuclides such as K-25 Health Physics and standard practice procedures.

5.2.2 Hazardous or Toxic Materials

The confinement systems (Section 4.4.2) are barriers and equipment that prevent the release of hazardous materials to the environment. The process systems and components in the incineration facility are the primary confinement or containment barriers. The secondary containment systems are discussed in Section 5.2.9.

Adequate ventilation (Section 4.4.3) is provided for the drum storage areas, for the drum handling enclosure in Building K-1435B, and for the K-1435A Control Building, including control room, lunch room, laboratory, power distribution room, restrooms, and locker areas.

The process waste disposal systems (Section 4.4.4) incorporate control methods for gaseous, liquid, and solid wastes generated by the incineration facility. The process gas cleaning system (Section 4.3.6) neutralizes and controls the off-gas effluents from the combustion equipment. The liquid effluents are

analyzed and if they contain unacceptable organic contaminants, they are processed through carbon bed adsorbers before being transferred to the plant neutralization facility. One exception is that the ash trough water containing unacceptable organic contaminants is pumped to the aqueous liquid waste feed tank (T-307) for burning in the kiln; otherwise, it is combined with the scrubber purge water. Solid wastes are chemically analyzed and, depending on the PCB concentration, are either recycled to the kiln for incineration or drummed and disposed according to plant procedures.

5.2.3 Criticality Safety

Criticality control (Section 4.4.5) procedures are required for the incineration facility. Any waste containing uranium is accepted only if it meets criticality safety analysis requirements. Verification of waste analyses is made. Therefore, the accumulation of sufficient uranium to achieve criticality under these conditions is not expected.

5.2.4 Fire Safety

Fire prevention measures (Section 4.3.1 and 4.3.2) include precautions for the management of ignitable, reactive, or incompatible wastes. (Fire protection systems are discussed in Section 4.4.6). Precautions taken to prevent accidental fire and explosion include properly storing drums and tanks, assuring compatibility of these containers with wastes, using appropriate warning signs, monitoring of oxygen, and shredding of drums under inert blanketing gas. General precautions to prevent inadvertent mixing of incompatible wastes include obtaining reviews by reaction chemistry experts of the possibilities of exothermic reactions causing fires, explosions, or release of noxious or toxic vapor and following their recommendations to eliminate these hazards. In addition, the list of potentially incompatible waste groups from 40 CFR 264 Appendix V is used as a guide. Only wastes known to be compatible by testing or by experience are mixed.

5.2.5 Explosion or High Pressure

Explosion and high pressure safety features (Section 4.4.7) such as oxygen monitoring, nitrogen blanketing, rupture discs on the tanks, and flame arrestors are incorporated in the design of the incineration facility. An atmosphere monitoring and control system (Section 4.4.7.2) provides inert atmosphere for the shredder. Blowout (drum handling) and pressure relief (S. P. Conveyor) panels (Section 4.4.7.3) are installed. Unusual pressure surges in the kiln are relieved through the emergency vent stack (CA-501). A thermal relief stack (CA-515) in the secondary combustion chamber is used to vent the flue gases in the event of a malfunction such as loss of electrical power or failure of the induced draft fan. The automatic shutdown system (Section 4.4.7.1) is designed to shut down the incineration system if, for example, the temperature in either of the combustion chambers is too high or if the exit gas

temperature from the secondary burner is too high.

5.2.6 Safety-Related Monitoring

Monitoring and protection systems include appropriate instrumentation and controls (Section 4.4.1) to ensure smooth operation of the process as well as to prevent hazardous conditions or unacceptable emissions to the environment. Special field-mounted instrumentation is designed to prevent field instruments from becoming a flame or spark source if an electrical fault occurs. The various process tanks are equipped with an alarm system that is monitored from the K-1435A control room. The shredder and shredded product system is equipped with an oxygen monitoring and interlock system which is used to prevent an explosion. Lights are incorporated to indicate the status of the pumps, agitators, valves, tank levels, temperature, pressure, and other selected functions.

5.2.7 Engineering Controls and Worker Protection

Control technology methods have been developed for this incineration facility to reduce frequency or severity of exposure of operating personnel to chemical and physical agents during normal conditions and during accident situations. These control methods, which may have been mentioned previously, are summarized by activity in Table 5.2-1 and include engineering controls, worker protection, and administrative procedures.

In general, engineering controls incorporated in the facility design include containment systems, line transfer of liquid wastes, local exhaust ventilation, and enclosure and local exhaust ventilation for the drum handling system. Some specific controls include enclosure and local exhaust ventilation for the drum handling system, enclosure of purged drums during transfer of drums to the drum shredder, and interlock systems to control combustion and prevent explosions.

Worker protection includes the use of personal protective equipment, along with application of current K-25 programs in the areas of industrial hygiene, health physics, safety, fire protection, environmental protection, and equipment test and inspection.

5.2.8 Administrative Procedures

Administrative procedures are established to manage the safe operation of the incineration facility. These procedures involve internal operations at the facility, as well as numerous interfaces with other facilities and organizations. These procedures cover the entire spectrum of the facility operation: waste characterization, receiving and storage, feed preparation, incineration, process gas cleaning, waste disposal, and equipment/area inspections.

Table 5.2-1. Summary of Control Technology for K-1435 Incineration Facility at ORGDP*

		Preventive/Mitigative Measures		
Activity	Hazard	Engineering Controls	Worker Protection	Administrative Procedures
Receiving/Storage Drum Unloading	Delivered Wastes	Equipment test and inspection program	Safety, industrial hygiene, health physics, fire protection environmental protection programs	Emergency Squad Worker training - spill control
		Receiving and Storage area constructed per 40 CFR 178, 761.42 49 CFR 178.80, 178.82, 178.102, 178.115, 178.116	Protective clothing required depending on activity - neoprene gloves, apron, boots, goggles	Emergency response teams on call Training of drivers for spill control
		Curbed containment area, impervious floor with minimum 6-inch curb, spill prevention control and counter measure (SPCC) plan	Respiratory protective equipment, as specified by Industrial Hygiene, will be used when handling, transferring, or working with PCBs and other hazardous materials	Installation Emergency Director responsible for on-site accident prevention, clean-up, investigation, on K-25 site 24 hours.
		Monitoring for radioactive contamination	Standard procedures established for PCB removal from exposed workers	Inventory of chemicals on-site available for emergency response
			Washing before eating, smoking and similar activities. Food or drink not allowed in area	Labelling of drum contents Inspection of containers--radioactive contamination, leaks, spills
				Shipment must agree with shipping manifest
				Inspection of transport vehicle for leakage
				Change rooms with showers, work clothes provided
				Pre-placement medical examination
Tank truck unloading	Delivered wastes, 50 percent caustic, fuel oil, nitrogen	Receiving and storage area constructed per 40 CFR 761.42, 29 CFR 1919.106 Nitrogen purge of pumping lines	As indicated above	As indicated above
	Delivered wastes, 50 percent caustic, nitrogen	Storage area constructed per 40 CFR 761.42, 29 CFR 1910.106	As indicated above	As indicated above

* See Section 4 for details of engineering controls and administrative procedures.

Table 5.2-1 (continued)

		Preventive/Mitigative Measures		
Activity	Hazard	Engineering Controls	Worker Protection	Administrative Procedures
Tank truck unloading (continued)	Delivered wastes	Tanks vent to the atmosphere through carbon filters	As indicated above	As indicated above
Feed Preparation				
Drum Handling		Remote dumping of drums in enclosed drum handling station		As indicated above
		Local exhaust ventilation in drum handling enclosure		
		Differential pressure indicators to monitor exhaust system performance		
		Shroud with nitrogen purge used during opening of drums		
Liquid Waste Blending	Delivered waste	Agitation of tank contents	As indicated above	As indicated above
Drum Shredding	Delivered waste	Shredder will not operate during loading	As indicated above	Drums are emptied before shredding
		Nitrogen blanket Oxygen monitors Oxygen alarms		As indicated above
Incineration	Combustion pollutants, dust-fly ash, heat, noise	Master interlock to control combustion process assuring destruction of PCBs - control of combustion temperature, combustion air	As indicated above	As indicated above
		Safety relief valve to vent flue gases in the event of malfunction		
		Portable ash box serves as collection vessel and transportation carrier		
Off-Gas Treatment	Combustion pollutants, caustic	Quenching chambers, venturi scrubber (VS) and ionizing wet scrubber (IWS)	As indicated above	As indicated above
		Monitoring of off-gas in stack: CO, CO_2, O_2		

Table 5.4.1 (Continued)

		Preventive/Mitigative Measures		
Activity	Hazard	Engineering Controls	Worker Protection	Administrative Procedures
Solid aqueous Waste Management	Aqueous effluents; spent activated carbon	Master interlock-high temp alarms, low water level alarms, pressure drop alarms for VS, IWS, power alarms for IWS	As indicated above	As indicated above

OFFICIAL USE ONLY

OFFICIAL USE ONLY

OFFICIAL USE ONLY

5.2.9 Spill Prevention Control and Countermeasures

In addition to the mitigative measures identified previously (Table 5.2-1) and in Appendix F, the incineration facility will operate under a Spill Prevention Control and Countermeasure (SPCC) plan in compliance with applicable federal regulations governing transportation of organic wastes to the facility. While external transportation hazards are outside the scope of this FSAR, the SPCC plan also considers measures related to the facility operation. The K-25 Site Emergency Planning activity also considers the incineration facility.

The SPCC plan includes the following measures.[1]

Leaks or spills within the facility would be promptly reported to the shift superintendent, but cleanup actions would be initiated immediately by trained site personnel using personal protective equipment and following established procedures for protection against toxic/radiation exposure. Measures will be taken to assure that groundwater would not be contaminated in case of accidental release of hazardous wastes.

The K-25 shift superintendent would act as the emergency coordinator in the event of on-site emergencies and would use the emergency squad composed of Fire Department and other personnel from each normal working shift. These personnel are preassigned and routinely trained in emergency response.

It is very unlikely that a release of waste from this facility would escape the secondary containment systems. Dikes, trenches, and sumps are sized to contain spills/releases, as described in Section 4.4.2. If liquid waste were to escape a diked area, it could reach a small stream approximately 100 yards north of the facility and eventually reach Poplar Creek at K1700. However, two separate oil and chemical "traps" are located in series within the stream prior to the discharge into Poplar Creek. These traps would skim insoluble, floating chemicals, such as oil, and would trap insoluble sinking chemicals, such as PCBs. These materials could then be recovered with existing recovery equipment. Only water soluble chemicals, such as alcohol and machine coolants, could escape the traps.

In the unlikely event of a major release or explosion at the incinerator facility, operators would evacuate the area. The shift superintendent would be notified immediately and a determination would be made as to whether any or all of the plant population should be evacuated. Emergency personnel would wear self-contained breathing apparatus and full-body protection units when approaching the facility. Activities would be directed by the shift superintendent. All plant equipment and personnel would be available to the shift superintendent to assist in emergencies. Any resulting fires would be extinguished by automatic fire suppression systems and/or manual fire fighting efforts of the K-25 fire department.

General countermeasure information, equipment lists and instructions, maps, and telephone numbers are included in the facility SPCC plan. This information is also maintained for ready access in the facility's ank farm, drum handling, and incineration areas and also in the K-25 Central Control Facility.

The contingency plan for K-25 also considers the K-1435 hazardous waste incineration facility.[2] This contingency plan establishes policy and creates procedures for spill prevention, containment, and countermeasures to reduce safety and health hazards, to minimize any adverse impact to the environment, and to meet standards that define the acceptable management of hazardous wastes. The plan is written to use past experience and best management practices to minimize hazards to human health or to the environment from fires, explosions, or any unplanned release of hazardous wastes.

5.2.10 System Testing

Testing will be done to ensure that the design and the operating concepts are adequate to protect the health and safety of the employees and of the public. Testing activities for individual component tests, for integrated system tests, and for incinerator test burns have been completed.

Actual testing involved the following:

- Individual component tests to ensure proper functioning of equipment.
- Integrated system tests to ensure proper performance of the overall system and each subsystem and component.
- Incinerator test burns to provide monitoring for gaseous effluents and form the basis for determining satisfactory performance of the system.

If operation should reveal that further design effort or preventive/mitigative measures are necessary, then these measures will be provided and an FSAR revision or addendum or appropriate safety document will be prepared, as required.

5.3 Abnormal Conditions and Accidents

Based on the analysis methodology described in Appendix E, potential accidents are identified for the incineration facility and summarized in Appendix F. While numerous accidents have been postulated on the basis of the historic record of operations involved in storage, handling, and processing of toxic substances, most would not occur in this incineration facility because of the safety features incorporated in the design. Many postulated accidents were estimated to be of such low consequence should they occur or of such low probability of occurrence during the project life that they were not further analyzed or discussed in this report. Postulated accidents of more concern generally involved fire or explosion and subsequent release of hazardous material. The analyses include a discussion of the safety measures considered sufficient to minimize the probability of accident occurrence and/or to mitigate the consequences. Potential hazards were reviewed in a TSCA Incinerator Hazards Evaluation Report in March 1990.

The hazards associated with the K-1435 incineration facility primarily relate to releases or spills of hazardous materials and to fire/explosion. This section includes an accident summary and a more detailed

accident analysis or discussion.

5.3.1 Accident Summary

The potential accident causes can be placed in three main categories: (1) operator error, (2) equipment failure, and (3) natural phenomena. Accident effects can be generally related to toxic material releases, fire, and explosion. Table 5.3-1 summarizes the potential accidents by category, while Table 5.3-2 lists the accident scenarios by area function. Table 5.3-3 summarizes the systems for preventing or mitigating these accidents and relates the systems to the area of discussion in Chapter 4. Appendix F is a complete presentation of each accident scenario with the associated failure modes/initiating events, preventive measures, mitigative measures, probability of occurrence and consequence level.

Table 5.3-1 Accidents by Category

	Accident Scenarios
Accident Cause	Total
Operator error	6
Equipment Failure	22
Natural phenomena	5
Total	33
Accident Type	
Toxic Material Release (T)	17
Fire (F)	10
Explosion (E)	6
Total	33

Based on the accident scenario table presented in Appendix F, the scenario matrix shown in Figure 5.3-1 indicates the relationship of accidents to each other. This figure was used in selecting accident scenarios for quantitative evaluation and discussion.

Work on a Failure Modes and Effects Analysis (FMEA) has been summarized in a report (March 13, 1987, Revision 1) by International Waste Energy System (IWES). This work can be used to understand system failure modes, system effects, methods of detection, and corrective action. The system FMEA can also be used to provide perspective on accident scenarios that could involve equipment failure. The IWES report is included as Appendix G.

Table 5.3-2. Accident sc os by area function

Area Function	Accident Number	Accident Situation	Probability of occurrence[a]	Conse-quence[b]
Receiving and Sorting	RS-1	During unloading operations, a fork truck penetrates, crashes into, or knocks over drums containing liquid toxic chemicals. (T)[c]	E	2
	RS-2	During unloading operations, a fork truck damages liquid-containing drums as above and a fire source exists to ignite the liquid. (F)	B	3
	RS-3	During tank truck unloading, a large leak develops of flammable toxic material that is ignited, resulting in fire. (F)	B	3
	RS-4	Full tank truck leaks, resulting on toxic chemical spills. (T)	C	2
Process Storage	PS-1[d]	Receiving, storage, and/or feed tanks, or associated piping leak, resulting in a large spill of toxic chemicals. (T)	C	2
	PS-2[d]	Leaks in above tanks occur and liquids are ignitied, resulting in fire. (F)	B	3
	PS-3[d]	Failure of elastomeric diaphragm in air diaphragm liquid waste feed pump, resulting in aqueous liquid waste leaking to atmosphere (T)	C	3
Feed Preparation	FP-1	Materials in a drum are ignited at drum dumping station. (F)	C	2
	FP-2	Materials in a drum explode at drum dumping station. (E)	B	3
	FP-3[d]	A full drum of flammable toxic liquid, such as oil containing >500 ppm PCB, is mistakenly fed to shredder, resulting in a fire and in the release of PCB to atmosphere. (F)	C	3
	FP-4[d]	Same as FP-3 except a highly flammable liquid, such as acetone (with little or no PCB), explodes in shredder, (E)	C	3
	FP-5[d]	Nitrogen system in shredded product hopper fails, enabling an exposive atmosphere to occur. Spark source ignites gas. (E) a. Shredded Products enclosure-Large Explosion b. Shredded Products enclosure-Small Explosion c. Shredder Housing-Explosion	 B C C	 4 3 3
	FP-6	Fan failure, resulting in personnel injury from flying missiles and material release. (R)	C	3
Incineration	I-1	Laboratory sample of flammable toxic chemical breaks in incinerator bottle drop and catches fire before entering incinerator. (F)	A	2
	I-2	PCBs are not destroyed in incinerator, resulting in PCB contamination in ashwater which is released from plant site. (T)	C	2
[e] PS-2M		Major Fire in tank farm.	A	4

Table 5.3-2 (Continued)

Area Function	Accident Number	Accident Situation	Probability of occurrence[a]	Consequence[b]
Incineration (continued)	I-3	Rotary kiln walls fail, resulting in release of potentially toxic gases to atmosphere. (T)	A	3
	I-4	Low oxygen conditions exist in incinerator, resulting in the creation of toxic materials which are ultimately emitted through the stack. (T)	B	2
	I-5	Low temperature conditions in secondary combustion results in toxic materials which are released through stack. (T)	C	2
	I-6 [d]	Excessive temperature and pressure, causes burner management interlocks to open thermal relief stack, releasing gases to atmosphere. (T)	D	3
	I-7	Rotary kiln overpressure, resulting in gas releases from kiln seals. (T)	C	3
	I-8 [d]	Slag/hot ash builds up and a large block of molten slag falls into wet quench tank, resulting in steam overpressure/explosion. (E)	C	3
	I-9 [d]	Slag/hot ash builds up, resulting in personnel entering the area being burned by the falling slag and hot ash. (F)	C	3
	I-10 [d]	Natural gas supply valve leaks in secondary combustion chamber (SCC) filling the chamber with natural gas which is not purged, resulting in an explosion. (E)	B	3
Off-Gas Treatment	OG-1	A portion of process gas cleaning system is breached, resulting in release of off-gases locally. (T)	B	2
	OG-2	Process gas cleaning system fails to function as designed, releasing improperly treated off-gas through stack. (T)	C	2
	OG-3	Fire/fumes results from ignition and burning of fiberglass equipment. (F)	B	3
	OG-4	A drum of solid waste containing excess high volatile high Btu liquid is dropped in rotary kiln, followed by CO buildup and introduction of an ignition source, resulting in an explosion. (E)	C	3
	OG-6 [d]	Induced draft fan fails, resulting in personnel injury from flying missiles and toxic material release. (R)	C	3
	OG-7 [d]	High (90 mph) winds cause stack to fall, resulting in material release. (R)	A	3
Natural Phenomena	N-1	Earthquake results in rupture to tanks, lines, incinerator, etc., thus releasing toxic chemicals as liquids or gases. (T)	A	3
	N-2	Tornado results in similar situation as N-1. (T)	A	3

Table 5.3-2 (Continued)

Area Function	Accident Number	Accident Situation	Probability of occurrence[a]	Consequence[b]
Natural Phenomena (continued)	N-3	Lightning strikes flammable liquid storage tank, resulting in fire. (F)	A	3
	N-4[d]	A direct lightning strike during an electrical storm, along with a bad ground connection results in a fire/toxic material release. (F)	D	3

Notes -
[a] Probability: See Table E-1 in Appendix E for definitions
[b] Consequence: See Table E-2 in Appendix E for definitions
[c] Accident Type: E = Explosion, F = Fire, T = Toxic Material Release
[d] Discussed in text

OFFICIAL USE ONLY

OFFICIAL USE ONLY

Table 5.3-3 Summary of systems for preventing or mitigating accidents*

	Preventive System		Mitigative System	
Accident Scenario	Title	Section	Title	Section
RS-1,2,3,4	Administrative Procedures		Confinement (curbs and sumps)	4.4.2
PS-1	Monitoring and Protection Administrative Procedures	4.4.1	Confinement (curbs and sumps)	4.4.2
PS-2	Monitoring and Protection Explosion and Pressure Relief (Standard Industrial System)	4.4.1 4.4.7	Fire Protection Fire Department	4.4.6
PS-3	Administrative Procedures		Fire Department	
FP-1	Explosion and Pressure Relief (Standard Industrial System)	4.4.7	Fire Protection Blowout Panels	4.4.6 4.4.7.3
FP-2	Ventilation Explosion and Pressure Relief (Atmosphere Control System)	4.4.3 4.4.7	Fire Protection Blowout Panels	4.4.6 4.4.7.3
FP-3	Monitoring and Protection Explosion and Pressure Relief (Atmosphere Control System) Administrative Procedures	4.4.1 4.4.7	Fire Protection (Redundant high-temp. alarms actuate sprinklers	4.4.6
FP-4	Monitoring and Protection Explosion and Pressure Relief (Atmosphere Control System) Administrative Procedures	4.4.1 4.4.7	Fire Protection (Redundant high-temp. alarms actuate sprinklers Blowout Panel	4.4.6 4.4.7.3
FP-5	Monitoring and Protection Explosion and Pressure Relief (Atmosphere Control System)	4.4.1 4.4.7	Fire Protection	4.4.6
FP-6	Use of appropriate fan material and mounting pads		Confinement (metal shroud)	
I-1	Administrative Procedures			
I-2	Monitoring and Protection Automatic Shutdown (master interlock)	4.4.1 4.4.7		

OFFICIAL USE ONLY

OFFICIAL USE ONLY

Table 5.3-3 (Continued)

	Preventive System		Mitigative System	
Accident Scenario	Title	Section	Title	Section
I-3	Monitoring and Protection Automatic Shutdown (master interlock) Administrative Procedures	4.4.1 4.4.7	Process Waste Disposal (Off-gas treatment	4.4.4
I-4	Monitoring and Protection Automatic Shutdown (master interlock) Administrative Procedures	4.4.1 4.4.7	Process Waste Disposal (Off-gas treatment)	4.4.4
I-5	Monitoring and Protection Automatic Shutdown (master interlock) Administrative Procedures	4.4.1 4.4.7		
I-6			Automatic Shutdown (master interlock)	4.4.7
I-7	Waste Feed Design Administrative Procedures		Relief Vents at entrance of rotary kiln and exit of secondary combustion chamber	
I-8	Administrative Procedures		Design of incinerator Relief vents at entrance of rotary kiln and at exit of secondary combustion chamber	
I-9	Administrative Procedures		Personnel protective equipment	
I-10	Purge control system		Relief vents at entrance of rotary kiln and at exit of secondary combustion chamber.	
OG-1	Monitoring and Protection Automatic Shutdown (master interlock) Administrative Procedures	4.4.1 4.4.7	Automatic Shutdown (master interlock)	4.4.7
OG-2	Monitoring and Protection Automatic Shutdown (master interlock)	4.4.1 4.4.7	Automatic Shutdown (master interlock)	4.4.7

Table 5.3-3 (Continued)

	Preventive System		Mitigative System	
Accident Scenario	Title	Section	Title	Section
OG-3	Pressure relief Automatic Shutdown (master interlock) Use of FRP material		Fire Department	
OG-4	Administrative Procedures Automatic IWS electrical cutoff		Explosion panels in sides of IWS stages	
OG-6	Use of appropriate material of construction Use of soft-start motor starter		Confinement (metal shroud)	
OG-7	Administrative Procedures Support Protection Coupon test program		None	
N-1,2,3				
N-4	Administrative Procedures Improved Ground Connections Lightning Protection Upgrading Static Line Installation		Installation of Surge Arrestors	

OFFICIAL USE ONLY

OFFICIAL USE ONLY

Consequence	Probability	Accident Scenario
Ext Low (2)	Ext Low (A)	I1
	Low (B)	I4, 0G1
	Med (C)	FP1, I2, I5, 0G2, PS1, RS4
	Ext High (E)	RS1
Low (3)	Ext Low (A)	I3, N1, N2, N3, 0G7
	Low (B)	FP2, PS2, RS2, RS3, I8, I10, 0G3
	Med (C)	FP3, FP4, FP5b, FP5c, FP6, PS3, 0G4, 0G6, I7, I9
	High (D)	I6, N4,
Medium (4)	Ext Low	PS2m
	Low (B)	FP5a

Figure 5.3-1 Accident Scenario Matrix

A Fault Tree Analysis was completed for three top event system faults (corresponding to accident scenarios FP-5, I-6 and RS-1) and a quantitative analysis of each fault tree was completed. This work is summarized in Appendix H and the results are reflected in this FSAR, Section 5.3.

Operator error is reduced by consideration of the appropriate human factors in the design and layout of the incineration facility and related equipment. The facility is arranged in four general areas: a tank farm, a drum storage building, an incineration and off-gas treatment area, and a control room in an isolated structure. This arrangement accommodates processing under minimum stress conditions. Input from operations personnel was incorporated into the design in area such as equipment arrangements, display panel boards, and process control locations. Special equipment has been obtained from industry specialists, and appropriate manuals and training have been provided. Startup, operating, shutdown, and maintenance procedures have been prepared. Readiness reviews will be done by operations and specialist groups before the facility is operated. Operator errors are included in the quantitative analysis of the three accident scenarios and their fault trees shown in Appendix H.

5.3.2 Radiation

No accident scenarios are listed specifically for radiation exposure although the possibility is recognized since uranium contaminated wastes will be handled. Loss of containment could result in radiation exposure of operating personnel, however, the use of K-25 Health Physics and other procedures would mitigate exposure consequences. Containment, monitoring and accidental release prevention features are all used to prevent radiation exposure. Consequences of a radiation exposure accident are expected to be limited because of the type and quantity of processed material (6/90 readiness note: highest field observed was 42 mR/hr compared to normal acceptance criteria of 10 mR/hr on surface and 2 mR/hr at 2 ft.) A limit of 4 ppb ^{239}Pu/g of waste (246 pCi/g of waste) would prevent quantities needed for criticality due to ^{239}Pu from accumulating.

5.3.3 Hazardous or Toxic Material

Seventeen accident scenarios are shown in Appendix F that relate to hazardous or toxic material releases, namely RS-1, RS4, PS-1, I-2, PS-3 for liquids, I-3, I-4, I-5, I-6, I-7, OG-1, OG-2, OG-6, OG-7, FP-6 for gases, and N-1 and N-2. Table 5.3-2 contains a summary of scenarios which are described more fully in Appendix F. Some toxic material releases could occur during other scenarios involving fires, explosions and natural phenomena-caused accidents (such as RS-2, RS-3, PS-2, FP-3, FP-4, FP-5, I-8, I-9, I-10, OG-3, OG-4, N-4). Scenarios PS-1 (liquid release from undetected spill) and I-6 (gaseous release from thermal relief stack) are discussed in this section. Scenarios PS-2 (fire in storage area), FP-3 (fire in shredder), and PS-2M (major fire in tank farm) are discussed in Section 5.3.5. Explosion scenarios FP-4 (Shredder), FP-5 (Shredded product hopper), I-8 (Steam Overpressure/Explosion in Secondary Combustion/Ash Quench),

and I-10 (Explosion in SCC caused by Natural Gas Buildup) are discussed in Section 5.3.6. Scenario RS-1 is discussed in Appendix H.

5.3.3.1 Liquid Release from Undetected Spill (PS-1)

This postulated accident is presented to show what the effect of an undetected spill would be in terms of PCB concentration downstream. The scenario would require a major release to occur and be undetected. Preventive measures include inspections and testing of discharge streams. Mitigative methods include collection or containment areas (dikes, sumps).

Source Term - 35,000 gal of water per 24 hr containing 50 ppm PCB
- 132,000 L/24 hr
- 6,600 gm PCB/24 hr (14.5 lb/24 hr)
- 0.0764 gm PCB/sec
- 76,400 ug/sec

Concentration
- 1 part per billion (ppb) = 1 ug/liter
- ppb = $\frac{\text{76,400 ug/sec}}{\text{Flow (Liters/sec)}}$

	Average Stream Flow		PCB Concentration
Stream	gpm	L/sec	ppb
Unit	27	1.696	45,050
K-1700	777	48.82	1,565
Poplar Creek	89,950	5,652	13.52
Clinch River	1,709,000	107,400	0.71

The estimated effect on the Clinch River from this postulated scenario is small. The consequence rating is extremely low.

Probability of this scenario is considered to be in the medium range (once per 10 to 100 years).

5.3.3.2 Gaseous Release from Thermal Relief Stack (I-6)

This scenario would involve the thermal relief stack (C-515) opening and releasing incinerator gases. The scenario could occur if a high temperature condition developed in the downstream quench tower (T-501) or if the downstream induced draft fan (F530) failed. The thermal relief stack is provided to prevent excess temperature or pressure from occurring in the system. The feed to the incinerator system would be stopped by the master interlock system if the thermal relief stack opened.

Gases released from the thermal relief stack would not have been cleaned in the offgas treatment system. Some quantities that could be released are shown in the following summary.

Component	Flow Rate (lb/hr)[a]		Abnormal Release Ratio Combustion/ Stack
	From Combustion From Combustion to Quench	From Stack	
Particulate	1.1 E2[b]	2.8 EO	4.0 E1
HCl	2.0 E2	3.0 E-4	6.7 E5
S02	1.9 E1	1.1 E-1	1.6 E2
HF	2.0 EO	3.0 E-6	6.7 E5

[a]Source: Table 4.3-3 of FSAR

[b]Notation: 1.1 E2 = 1.1×10^2 = 110

The component's abnormal release ratio is obtained by dividing the component flow to the quench chamber by the flow from the facility's stack. The difference in the two figures is the quantity removed in the offgas cleaning system. To provide some perspective, the abnormal release ratio is compared with the residential exposure to guideline ratio shown in the 1985 environmental impact statement (EIS) supplement.

Component	Exposure to Guideline Ratio[a]	Abnormal Release Ratio[b]	Product
Particulate	8.3 E-4	4.0 E1	3.3 E-2
HCl	4.9 E-5	6.7 E5	3.3 E1
S02	1.3 E-4	1.6 E2	2.1 E-2
HF	2.1 E-4	6.7 E5	1.4 E2

[a]Source: Table 3-4, August 16, 1985 Environmental Impact Statement (Supplement)

[b]Source: Previous Summary based on Table 4.3-3

The exposure to guideline ratio was based on comparing residential exposures (calculated using dispersion models and a revised EIS component source term) with guideline values. The product of the two numbers is shown. If the calculated product is greater than 1.0 EO (1.0), the quantities of components abnormally emitted over a long time period could exceed exposure guideline values. Since the thermal relief vent is not likely to have these quantities emitted for a long time, the exposure to the assumed residence, 4 km SSW of the facility, will be much less.

Exposure of persons nearer the incinerator to abnormally emitted gases could/would be higher, however, these gases are likely to be dispersed sufficiently to remain within maximum permitted exposure guidelines. This scenario has been rated high (D) probability (See Appendix H) and low (3) consequence.

5.3.4 Criticality

No accident scenarios involving criticality are listed. Criticality is prevented by the use of waste acceptance requirements for the uranium-contaminated waste and by the use of administrative controls required by the K-25 criticality safety program. Any uranium-contaminated waste is accepted only after verification of its content and only if it meets the criticality safety analysis requirements (no limit on uranium content for assays less than 1% or less than 5ppm U content for assays of 1% or greater than ^{235}). Under these conditions, accumulation of sufficient uranium (whose assay is 1% or greater) to achieve criticality is not expected. A limit of 4 ppb ^{239}Pu/g of waste (246 pCi/g of waste) would prevent quantities needed for criticality due to ^{239}Pu from accumulating. The K-25 Site has a Radiation/Criticality Alarm System to detect the occurrence of a criticality event, to provide instantaneous (within 1/2 sec.) audible and visual alarms to warn personnel to evacuate from the danger area, and to immediately alert the Plant Emergency Director's office of the occurrence of such an accident and its approximate location.

5.3.5 Fire

Nine accident scenarios pertaining to fire are described in Appendix F and listed in Table 5.3-2 (RS-2, RS-3, PS-2, PS-3, FP-1, FP-3, I-1, N-3, OG-3). Three of these scenarios will be described more fully in this section namely: Fire in The Storage Area (PS-2) Fire in the Shredder (FP-3), and Major Fire in Tank Farm (PS-2M).

5.3.5.1 Fire in Storage Area (PS-2)

A fire in the tank farm could occur in two ways: flammable liquids leak from a tank and are ignited, or flammable liquids are ignited in a tank. The type liquids considered for the fire are those that contain PCBs such as oils. Other flammable liquids are stored separately from the PCB-containing liquids and are not likely to be a threat to dispersing PCB-containing liquids. Handling of the non-PCB materials involves standard industrial practice.

Required Events

For the accident to happen, the following events must occur.

- A relatively large leak must occur in a tank or associated piping. The leak must be large enough to provide a significant source of flammable liquid before being detected by operating personnel.
- An ignition source must be present exterior to the tank.
- Or, an ignition source must exist inside the tank, plus the nitrogen blankets must leak away and be replaced by air.

Preventive Measures

The following preventive measures exist:

- All tanks meet applicable ASME standards.
- All tanks are nitrogen blanketed and have nitrogen monitors, flame arresters, and rupture discs.
- All tanks containing agitators have low-level alarms to shut off agitators to prevent friction sparks.
- All associated electrical equipment are designed to meet applicable electrical (Class I Division II) and fire safety codes.

Mitigative Measures

Mitigating features exist with respect to the postulated fire accident in the tank farm:

- The K-25 Fire Department is available to quickly respond to a fire. Routine portable fire extinguishing equipment will be available on-site.
- Two-level fire detection system is provided, as described in Section 4.4.6. The first level consists of ultraviolet detectors, is unzoned, and is arranged to signal the K-25 Fire Department. The second level is the pilot head system. This system is zoned and trips the automatic suppression system.
- A manual foam and an automatic deluge system is provided. This system is divided into four zones and is hydraulically designed for a 0.3 gpm/ft^2 density. This system also supplies two standpipes, one near the tank farm and the other near the drum handling area.

Fire Types

Interior tank fire. Fire is assumed to occur in the 5,000gallon-capacity, dilute-PCB receiving tank, the tank is half-full of oil containing 500 ppm PCB, the nitrogen blanket is replaced by air, and the fire is initiated by a spark internal to the tank. Finally, it is assumed that the fire is oxygen limited to the available oxygen in the tank, that the arriving fire-fighting crew prevents the fire from spreading, and that the burned oil moves as a cloud offsite.

An estimate of the amount of oil burned is as follows:

- Total tank capacity: 5,000 gallons
- Oil assumed in tank: 2,500 gallons
- Air in tank: 2,500 gallons or 9,460 liters
- 0_2 in tank: 1,987 liters (or 88.7 moles 0_2)
- Assumed fire reaction: $CH_2 + 0_2 = CO + H_20$
- Amount of oil burned: 0.33 gallons.

A fire inside of a tank normally is oxygen-limited and, because of the several features associated with the tanks, does not pose an immediate threat to operating personnel. Only field operators are in the area performing job duties.

Offsite effects of 0.33 gallons of oil, containing 500 ppm PCB, vaporized and moving as a cloud would be small. Only about 0.6 grams of PCB would be dispersed in the cloud.

Exterior tank fire.

For an exterior tank fire, it is assumed that fire is due to a leak of 1 liter/minute of oil containing 500 ppm PCB, that the fire is initiated when 10 liters of oil have leaked out, that the fire continues to be fed by 1 liter/minute of oil, and that the K-25 Fire Department arrives in 10 minutes after fire initiation and extinguishes the fire. Thus, 20 liters or 5.3 gallons of oil are burned and travel as a cloud offsite.

The fire protection system would detect fire exterior to a tank. Operating personnel would have time to see the fire and to escape.

The quantity of PCBs, at 500 ppm, in 20 liters of oil is 10 grams. Depending on weather conditions, the dispersal of 10 grams of PCBs by the fire could raise airborne concentrations of PCBs to levels exceeding the permissible short-term concentration of 1,000 ug/m3 for short distances from the fire.

Assessment

Accident scenario PS-2 is assigned a low probability (B) and a low consequence (3) for reasons previously discussed.

5.3.5.2 Fire in Shredder (FP-3)

A fire is assumed to occur in the incinerator shredder as a result of mistakenly feeding a 55-gallon drum of waste oil with 6,000 ppm PCBs into the shredder. Generally, waste oil contains only 500 ppm PCBs.

Required Events

For the accident to occur, the following events must occur:

- Administrative procedures fail and a liquid-containing drum is fed directly to the shredder. This violation of required procedures may begin at the site of drum loading as a result of mislabeling a package or placing one or more drums into an incorrect group. The liquid containing drum must also escape incinerator site sampling or be mistakenly placed with solids-containing drums after correct sampling.
- A liquid-containing drum may be mistakenly only partially emptied and subsequently fed to the shredder. (Even after drum emptying, liquid would remain in the drum; this liquid would be vaporizing as it is dumped into the shredder hopper).
- Nitrogen inerting system fails such as the oxygen monitor (analyzer), the controls, or the nitrogen supply. If the nitrogen inerting system fails, ignition of flammable liquids and/or explosion could occur.
- An ignition source is available such as a spark generated by the shredder from metal-on-metal contact and/or friction heating, by associated electrical equipment or by a flashback from the rotary kiln.

Preventive Measures

Various preventive measures exist to prevent, or lessen, the probability of occurence of shredder fire:

- Administrative procedures and sampling procedures are used to prevent a liquid drum from being fed.
- Design of the drum handling system reduces the potential for feeding a drum of liquid to the shredder. Normally, the drum is deheaded, drained of its content, and then fed to the shredder.
- The shredder enclosure is nitrogen blanketed to provide an inert atmosphere (<5 percent oxygen).
- The oxygen sensors are interlocked with the shredder. Should the nitrogen inerting system fail, the oxygen sensor would shut off the shredder.

Mitigative Measures

Accident mitigative features also exist that could lessen the severity of a shredder fire:

- Automatic sprinklers in the nearby drum handling enclosure are activated by high temperature and would limit the spread of fire in this area.

Probability

Incinerator shredder fires have occurred in the past, particularly in municipal refuse incinerator shredders. Fires have also occurred in solvent incinerator feed systems. The probability of this specific type of incinerator shredder fire at this TSCA incinerator facility is estimated to be medium, (Table E-1).

Consequences

The consequences of exposure to both the operating personnel and the environment were estimated to be medium.

The postulated shredder fire has the potential for low consequences (Table E-2) on operating personnel and the area. These health effects are due primarily to potential smoke inhalation and to short-term PCB exposure, which is discussed later. Less likelihood exists of burns to operating personnel or of significant exposure to uranium.

Consequences to the public are estimated on the basis of the following assumptions:

- Drum containing 50 gallons of oil is fed to shredder.
- Oil contains 6,000 ppm PCBs.
- Five gallons of oil burns (contains 0.2 lb PCBs).
- Sprinkler activates after 5 gallons of oil burns and extinguishes fire.
- Burned oil, containing PCBs, exits a lm x lm pressure relief vent on the shredder and forms a cloud 1 m x 1 m x 12 m above the vent.

Calculations of PCB concentrations were made by following the procedures for instantaneous sources presented by Turner. For three different atmospheric stability conditons (unstable, neutral, and very stable), the maximum PCB concentration was calculated as a function of distance downwind from the shredder as presented in Table 5.3-4. The short-term exposure limit (STEL) is 1,000 ug/m^3, and this criterion is applicable to the postulated shredder fire conditions. The following conclusions are based on data presented in Table 5.3-4.

Table 5.3-4. Predicted maximum downwind PCB concentrations resulting from a fire at the shredder

Distance Downwind (Meters)	PCB Concentration (ug/m³) Atmospheric Stability Condition		
	Unstable	Neutral	Very Stable
10	2.4×10^5	5.2×10^3	2.2×10^3
50	2.7×10^4	2.6×10^4	2.6×10^3
100	5.2×10^3	1.1×10^3	<1.0
500	122	1.6×10^3	2.9
1,000	22	429	57
4,000	0.62	17	288
10,000	0.61	1.7	82

- Under unstable atmospheric conditions, people within 200 m of the shredder, in the path of the smoke/PCB cloud, would receive a short-term PCB exposure in excess of 1,000 ug/m³.
- Under neutral atmospheric conditions, people within 650 m of the shredder, in the path of the cloud, would receive a short-term PCB exposure in excess of 1000 ug/m³.
- Under very stable atmospheric conditions, beyond 100 m, downwind concentrations are less than 1,000 ug/m³.

As mentioned above, operating personnel and others up to 650 m from the shredder and in the path of the smoke/PCB cloud would be subjected to a short-term exposure exceeding 1,000 ug/m³, the level established for four 15-minute occupational exposures to the skin a day. Some workers would be exposed in excess of this amount for about eight seconds; since this is above the occupational exposure standard, preventive measures to reduce the PCB exposure (ventilation) or to reduce further the accident potential (nitrogen) included redesign of the drum handling system during the final design phase. The health effects of exposure to low-level ionizing radiation, to PCBs, and to polychlorinated dibenzodioxins and polychlorinated dibenzofurans are described in Appendix J of the Environmental Impact Statement.

For persons not directly exposed to the smoke/PCB cloud or in its path, impacts to the environment would depend on the amount of PCB released and its dispersion specifically the effect of the PCB on the environment would vary directly with the volume and inversely with the area of dispersion. According to the EIS, both the small volume and the likely rapidity of dispersion under local atmospheric conditions suggest that no significant longterm changes in the environment would be observed as a result of a single release of this type. The quantity of material assumed as the source term for this scenario is likely to be higher than reasonably expected. The next accident scenario, PS-2M, has greater consequences.

5.3.5.3 Major Fire in Tank Farm (PS-2M)

This scenario has been revised for the December 1990 updated FSAR. A 65% PCB mixture is postulated as having been spilled and ignited which compares to the original FSAR's assumption of a 10,000 gal, 500 ppm PCB spill and fire. The accident prevention and mitigative measures described in section 5.3.5.1 (for scenario PS-2) also apply to this scenario. Estimates of PCB breakdown products are based on information found in the NIOSH "Current Intelligence bulletin 45," February 24, 1986.[3]

Accident Scenario Basis

- Spill of 10,000 gallons (37,700 liters) of a PCB mixture consisting of 65% Aroclor 1254 and 35% trichlorobenzene
- Simultaneous spill of 1100 gallons of fuel oil
- Ignition by an unspecified source
- Burning until all material is gone

Source Term

- Volume of 11,100 gallons (1484 ft^3) of PCB-fuel oil mixture
- Diked area of 3040 ft^2
- Liquid depth or 0.49 ft or 5.9 inches
- Burning rate of 8 inches/hr (maximum)
- Burning time of 0.74 hrs or 44 min. (minimum)
- Burning rate of 15,000 gal/hr or 15.8 L/sec
- PCB airborne transfer of 8,780 gal/hr or 9.2 L/sec
- PCB Source Term of 7.82 kg/sec (at 0.85 Specific Gravity)

PCB Fire By-Products Assumptions

PCB	polychlorinated biphenyl	1.0
PCDF	polychlorinated dibenzofurans	2.7 E-2
TCDF	2,3,7,8-tetrachlorodibenzofuran	2.6 E-3
PCDD	polychlorinated dibenzo-p-dioxins	3.6 E-4
TCDD	2,3,7,8-tetrachlorodibenzo-p-dioxin	3.4 E-6

Relative Carcinogenic Potencies (from C. E. Easterly, ORNL, 12/90)

(PCB)	Aroclor 1254	1
TCDF	2,3,7,8-tetrachlorodibenzofuran	64
TCDD	2,3,7,8-tetrachlorodibenzo-p-dioxin	1300

Guidelines for PCB Exposure (ug/m^3)

Long term Residential		(EPA)	0.0045
Occupational			
REL-TWA	(10h)	(NIOSH)	1.0
TLV-TWA	(skin)	(ACGIH)	500
STEL		(ACGIH)	1000
Unbearably Irritating			10,000

Dispersion Results

(Stable Atmosphere, AFTOX Dispersion Model)

Time after fire begins (mm)	Distance from fire (km)	PCB Airborne Concentration (on Soot) (ug/m^3)
75	1	8900
120	4	1600
180	8	700
240	12	400

Distances from TSCA Facility

	km	Direction
Road - TN Sec. 327	0.3	N
Road TN Prim. 58	0.6	SE
Cemetery (Ellis)	0.9	NW
House (Nearest)	3.2	NW
House (EIS Max. Exp.)	4.0	SSW
City Bldg - Oak Ridge	14.0	NE

Conclusions

- Acute health effects could be experienced by persons within 0.1 km of the fire who did not have breathing protection
- Irritation could be experienced by unprotected persons within 1 km of the postulated fire

- The calculated PCB concentration at 4 km exceeds the occupational short-term exposure limit (1600 vs 1000)
- Substantial off-site environmental effects could result from the deposition of fire-caused soot particles and adsorbed PCB/by-products
- Off-site long-term health effects would be influenced by exposure to the deposited material (Assumption: Residential reoccupancy would be prohibited until significant deposits of material were removed.
- Spills or failures greater than one 10,000 gal tank in the 3040 ft^2 diked area would burn at the same rate but for a longer time; a seismic event might cause multiple failure
- This accident scenario is considered to be bounding for the TSCA PCB Storage area (and the tanker unloading area)
- The probability of this scenario is considered to be extremely low (A)
- The consequence of this scenario is projected to be medium (to high)

5.3.6 Explosion or High Pressure

Six postulated accident scenarios involving explosion are described briefly in Appendix F and listed in Table 5.3-2 (FP-2, FP-4, FP-5, I-8, I-10, and OG-4). Four of the scenarios are discussed more fully in this section namely an explosion in the shredder (FP-4), an explosion in the shredded product hopper (FP-5), a steam overpressure/explosion in the secondary combustion/ash quench (I-8), and an explosion in the incinerator due to a natural gas buildup (I-10).

5.3.6.1 Explosion in Shredder (FP-4)

It is assumed that a drum of highly flammable liquid, such as acetone, is mistakenly fed into the incinerator shredder and explodes. Since the acetone will have little or no PCB associated with it, dispersion of PCB is not of concern.

Required Events

There are similiarities between this accident and Accident FP-3, described in 5.3.5.2; therefore, the same accident initiators could apply such as failure of administrative procedures, failure of the nitrogen inerting system and a spark or ignition source. This FP-4 scenario is somewhat related to FP-5 for which fault tree and probability information are shown in Appendix H.

Preventive Measures

The same preventive measures that apply to Accident FP-3 also apply to this accident such as administrative procedures prohibiting liquid feed, a nitrogen blanket over the shredder enclosure, and a nitrogen feed failure interlock to shut off the shredder. Two oxygen monitors are positioned above the shredder and restrict operation to cases where the oxygen content is less than 5 percent.

Mitigative Measures

Mitigative measures, namely the sprinkler system, will not have a significant effect of reducing consequences unless a fire occurs as a result of the explosion. The pressure relief vent in the drum handling area and pressure relief panels in the shredded product conveyor system might offer some mitigation of damage.

Probability

The probability of an incinerator shredder explosion is more difficult to estimate. An explosion appears less probable than a shredder fire but still in the medium (C) category based on the FP-5 results shown in Appendix H.

Consequences

Consequences of an incinerator shredder explosion will be localized. The greatest concern exists for operating personnel who may still be in the area loading the shredder. These persons may receive injuries or burns depending on the magnitude of the explosion. Therefore, a consequence level of low (3) is estimated for this accident using Table E-2 and is based on moderate injury or health concern to the operator.

Consequences of an explosion in the shredder on the public would be minor or negligible.

5.3.6.2 Explosion in Shredded Product Hopper (FP-5)

It is assumed that flammable liquid is present in the shredded product hopper and that the resultant vapor could explode. The following material pertains to this postulated accident scenario. The primary scenario is FP-5a and involves a large explosion in the shredded product enclosures. FP-5b involves a small explosion in the shredded product enclosures. FP-5c involves an explosion in the shredder housing.

Required Events

- Administrative procedures prohibiting flammable liquid feed are not followed.
- Residual liquid remains in drum and collects in product hopper and vaporizes.
- Nitrogen inerting system fails.
- Oxygen monitoring system fails.
- Control panel fails and does not provide warning.
- Interlock which shuts off shredder and grapple fails.
- Spark generated by metal-to-metal contact and/or friction heating ignites the gas.

Preventive Measures

- Administrative procedures prohibit liquid feed to shredder from which drainage would occur to shredded product hopper.
- Nitrogen inerting system provides an inert atmosphere containing less than 5 percent oxygen.
- Oxygen monitors are provided at 3 locations in the shredder product hopper and chute (to feed weigh bin).
- Oxygen monitors fail safe and shut down shredder and grapple via an interlock.
- Control panel provides signal if inerting system is lost.

Mitigative Measure

- A fire suppression system is provided and is activated by high temperature. Pressure relief panels could reduce the consequence of an explosion.

Probability

- Rated as low (B) for a large explosion in shredded product enclosure (5a), medium (C) for small explosion in shredded product enclosure (5b), and medium (C) for explosion in shredder housing (5c) based on the probability calculations shown in Appendix H.

Consequences

The effects of an explosion or overpressure condition on an operator would depend on the magnitude of the explosion and the nearness of the operator. Overpressure was estimated using certain assumptions and reported by J. H. Clinton[4] of Martin Marietta Process Engineering, in an April 7, 1986 memo and attachment to W. H. Hermes, entitled "Explosion Potential in TSCA Hopper Chute Feed System." The following material is taken from Clinton's analysis. (Scenario FP-5a)

Assumptions - The following assumptions were made:

- One atmosphere of air exists in hopper and chute system (nitrogen inerting and other systems have failed).
- Four hundred (400) cubic feet of waste are present.
- Enough liquid n-octane is present with the waste to produce the vapor pressure of n-octane.
- The initial temperature is 100°F.

Calculations - The following calculations were made:

- Calculated system volume = 1545 cu ft
- Air volume = 1545 - 400 = 1145 cu ft
- Moles air in 1145 ft^3 = 2.800
- Moles oxygen in 1145 ft^3 = 0.588
- Vapor pressure of n-octane at 40°C (104°F) = 29.2 mm Hg or 0.0384 atm
- Moles n-octane in 1145 ft^3 = 0.1075
- Combustion reaction

  $C_3H_{18} + 12.5\ 0_2 = 8\ CO_2 + 9\ H_20$
- Mole n-octane required to consume all of 0.588 moles oxygen = 0.588/12.5 = 0.047
- Heat of combustion of gaseous n-octane = 19,256 Btu/lb
- Heat given off in reaction of 0.047 moles n-octane = 103,200 Btu
- Beginning and ending nitrogen (not reacted) = 0.79 (2.8)

  = 2.212 moles x 28 = 61.96 lb
- Moles of combustion products = 3.072
- Estimated final temperature = 3011°F
- Estimated final pressure = 6.8 atm (absolute) = 5.8 atm gage = 85 psig

Discussion

An overpressure of 85 psig is likely to destroy (blow open) the shredded product hopper. A pressure wave of this magnitude is likely to result in a serious injury or a fatality if an operator were in the vicinity of the postulated explosion. Blast effects consider both pressure waves and impulses and possible fragments. Human effects consider damage to lung, ear, skull, and the whole body (Reference: NASA CR-134906/NTIS N76-19296302, "Workbook for Predicting Pressure Wave and Fragment Effects of Exploding Propellant Tanks and Gas Storage Vessels," W. E. Baker et al, Southwest Research Institute, November 1975). The consequence rating for this scenario is medium (4) based on a possible fatality or severe injury to operating personnel.

5.3.6.3 Steam Overpressure/Explosion in Secondary Combustion/Ash Quench (I-8) [New]

The TSCA facility has intermittently processed solids material since mid-1987. Dirt fed through the ram feeder is transformed to ash and drops into the mix chamber water quench as small particles. A potential reliability and safety problem may be slagging and/or hot ash build-up on the walls of the secondary combustion chamber (SCC). This potential problem could occur at RCRA operating temperatures (primary combustion temperature 1550°F and secondary combustion temperature 1850°F). A small portion of the dirt is carried over into the secondary comubstion chamber (SCC) and quench chamber. Portions of this carryover material forms slag at the entrance to the SCC or drops out as a fine particulate on the floor of the crossover section of the SCC. The remaining carryover enters the quench chamber and other off-gas treatment equipment where it is removed from the gas stream. It has been found that RCRA operating temperatures are insufficient to cause the slag to reach a molten state and there is an excessive slag buildup. If this occurs, it could have potentially serious consequences. There has been an incident in the Thermal Remediation industry when hot ash built up on the walls of a down-fired vertical SCC. Hot soil which had built up on the walls of a vertical SCC fell down into a wet fiberglass reinforced plastic (FRP) quench tank. The resultant steam explosion blew the FRP tank apart.

Required Events

- Facility running at RCRA temperatures (primary combustion temperatures 1550°F and secondary combustion temperature 1850°F).
- Slag and/or hot ash build-up.
- A large block of molten slag which has built up on the walls of the vertical SCC falls down into the wet quench tank and causes a steam overpressure or explosion. The following requirements would be necessary to reach explosive conditions; (1) a sufficient amount of surface area of molten material exposed to the water, and (2) nucleate boiling with the attendant high heat transfer.

Preventive Measures

- Administrative Controls to adhere to Standard Operating Procedure
  1. System taken to TSCA temperatures (primary combustion temperatures 1800°F and secondary combustion temperature 2200°F) to remove buildup of slag prior to shutdown if required following a visual observation. Running incinerator at TSCA temperatures reduces the amount of slag buildup.

Mitigative Measures

Mitigative features exist with respect to the postulated steam overpressure/explosion caused by the hot slag/water contact:

- The relief vents (surge vent and TRV) at the entrance of the kiln and at the exit of the secondary combustion chamber should relieve the pressure built up on 1/4 to 1 sec., which is the time span indicated by analysis[5] for steam release or evolution.
- The volume of steam released according to analysis[5] is approximately 500 cu ft and considering the relief vents in the system and the system (SCC) volume (~ 2925 cu ft), it is felt that this would probably not result in a pressure increase of more than 2 to 4 psig which will probably result in a slight bending of the sheet metal.

Probabilities

Following the SOP entitled "Incinerator Shutdown for Effluent Side Inspection and Maintenance" with administrative controls and owing to the relief ports at the entrance of the kiln and at the exits of the SCC should place the probability for a steam overpressure/explosion in the low (B) range.

Consequences

By exercising mitigative measures, the postulated steam overpressure/explosion accident has the potential for low consequences on operating personnel.

5.3.6.4 Explosion In Incinerator Due to Natural Gas Buildup (I-10) [New]

The secondary auxiliary fuel burner in the secondary combustion chamber (SCC) automatically provides fuel (natural gas or No. 2 fuel oil) as necessary to maintain the temperatures in the event the waste burner fails to provide the required heat input. There is a possibility that a natural gas supply valve which controls fuel flow to the SCC could leak during a shutdown period allowing the SCC to fill with a combustible mixture. If this mixture is not purged from the SCC before startup, an explosion could occur.

Required Events

- Natural gas supply valve leaks.
- SCC fills with natural gas.
- Combustible mixture is not purged.
- Explosion occurs.

Preventive Measures

The following preventive measures exist:

- An appropriate purge control system is in place to prevent such an occurrence.

The National Fire Protection Codes require a certain quantity of purge before the incinerator combustion chamber can start up. An induced draft fan and forced draft fans are used to provide the

purge which is a flow of air through the incinerator and associated ducts which will effectively remove any gaseous combustibles and replace with air. The unit purge of this combustion chamber is defined by the National Fire Protection Code 85 B and D as a flow of air at purge rate through the unit from the forced draft fan to the stack for the greater of either: (1) a period of not less than 5 minutes; or (2) 5 changes in volume of the furnace enclosure. This must be accomplished before the burners are lighted, and operator has to personally start the burner. The fuel vapors must be diluted with air until conditions are below 25% of the lower explosive limit (LEL) inventory of the fuel in the combustion chamber.

Mitigative Measures

Mitigative measurers exist with respect to the explosion in the incinerator due to natural gas buildup:

- The relief vents at the entrance of the kiln and at the exit of the secondary combustion chamber should aid in relieving any overpressure at those points.

Probabilities

With the purge control system in place, the probability for an explosion in the incinerator due to natural gas buildup is in the low (B) range (1 per 100 yr to 1 per 1000 yr).

Consequences

The postulated explosion in the incinerator due to natural gas buildup has the potential for low (3) to medium (4) consequences on operating personnel.

5.3.7 Equipment/System Failure [New]

Four postulated accident scenarios involving equipment/system failure are described briefly in Appendix F, listed in Table 5.3-2, and discussed more fully in this section namely the induced draft fan failure (OG-6), the stack falling (OG-7), a liquid waste feed pump failure (PS-3), and burns/exposure in the SCC and SCC crossover section (I-9).

5.3.7.1 Induced Draft Fan Failure (OG-6) [New]

During the final phases of a series of test burns to receive a RCRA permit, the induced draft fan failed with pieces of the fiber-reinforced plastic fan rotor penetrating the housing. After further study, following the failure of the fiber-reinforced plastic fan rotor, the listed modifications were made to the exhaust fan assembly to both prevent and mitigate the effects of failure of the fiber-reinforced plastic fan replacement: (1) an exterior steel fan shield containment structure was added, (2) an autotransformer-reduced voltage motor starter was substituted for the full-voltage starter in the original design and (3) the ber-reinforced plastic replacement rotor was fabricated using a higher temperature-rated resin under an approved manufacturing Quality Assurance/Quality Control Plan. The fiber-reinforced plastic fan has now

(9/90) been replaced with a metal induced draft fan.

There are no fissile, radioactive, or hazardous material safety concerns involved in the metal replacement induced draft fan. However a fan failure causes a "thermal relief vent event" which is a reportable incident under EPA regulations.

Fan failure (catastrophic mechanical failure is only one mode) diverts gaseous emissions from the stack to the emergency vent stack or to the secondary combustion thermal relief vent stack, and this changes the composition of the emissions. Even though the organics have been decomposed, particulates and acid gases are vented to the atmosphere and bypass the scrubbers. The venting procedure is based on established fire and explosion prevention criteria so that fan failure does not cause fire or explosion safety concerns.

The hazard involved in the induced fan operation is the possible injury to operating personnel by flying pieces of the rotor (shrapnel-type projectiles), if the fan undergoes catastrophic mechanical failure, and any subsequent release of material.

Required Events

1. Failure of the TSCA incinerator induced draft fan.
2. Injury to operating personnel by flying pieces of the rotor (shrapnel-type projectiles) if the fan undergoes catastrophic mechanical failure.
3. Toxic material release caused by projectiles damaging nearby equipment.

Preventive Measures

The following preventive measures exist:

1. Use of Hastelloy C-22 (alloy) as a metal appropriate for use in the TSCA incinerator induced draft fan (Appendix A, K/D-SA-2149).[6] This material is stronger than the FRP material and highly corrosive resistant and was strongly recommended in a material study.
2. A new mounting pad, designed to DOE Order 6430.1A, "General Design Criteria. Design Calculations show that the fan pedestal is seismically gualified (communication with Joe Huggins who designed the pedestal).
3. Continued use of a soft-start motor starter.

A material study, made by Dr. S. J. Pawel of the Y-12 Development Division, for purposes of recommending a metal appropriate for uses in the induced draft fan identified Hastelloy

C-22 (UNS N06022) as the recommended alloy. Three independent reviews of the study agreed that Hastelloy C-22 was a suitable material for the application.

The soft-start autotransformer reduced voltage starter, installed to protect the fiber-reinforced plastic fan by reducing the acceleration during startup, will still be used. The loading on the fan rotor during acceleration is partially due to change in momentum and a lower angular acceleration lowers the stress. The same drive motor will be used but the fan will run at a higher speed to produce the same gas velocity.

Mitigative Measures

Mitigative features exist with respect to the postulated induced draft fan failure:

1. A double-walled corrosion-resistant metal shroud of the replacement fan is designed to provide containment if metal impeller or rotor deblades to enhance the protection for operators.

The double-walled metal fan assembly shroud, which is also fabricated from Hastelloy C-22 alloy, is designed to contain a fan rotor failure. A sound basis for the fan design result from calculations by the manufacturer and analysis by MMES Engineering Analysis (the calculations and MMES analysis are included in Appendix B of the induced draft fan safety assessment, K/D-SA-2149).

The impact analysis performed by MMES (also Appendix B, K/D-SA-2149) was also based on a single blade projectile but the analysis is on a localized region and is applicable to multiple blade failures. Therefore, it is not limited by a single blade failure scenario.

Probabilities

With the preventive and mitigative measures in place, the probability of employees being injured by flying pieces of rotor is in the low B range (likely to occur once every 100 to 1000 years).

Consequences

The postulated induced fan failure accident causing personal injury has the potential for low (3) consequences.

5.3.7.2 Stack Falling (OG-7) [New]

The stack (CA-535) which receives the water-saturated flue gas and vents it to the atmosphere is 100 ft high and has a 4.5-ft-diameter with a gas velocity of approximately 200 feet per second. The stack is equipped with two 4-inch-diameter flanged EPA sample ports spaced at 90° for isokinetic sampling, and a gas monitor (CO, O_2, CO_2). The stack will be complete with sample platform, hand railing, caged ladder, support guying cables, clips, and imbedded steel anchors.

The stack is fabricated of fire retardant Duracor Fiberglass Reinforced Plastic (FRP) with any required wetted metallic parts of Hastelloy C-276.

The stack is a 100-ft-tall structure and has the potential to fall, especially in conditions of high winds (~ 90 mph wind). The stack could fall and render the process to be inoperable. The stack could also fall onto other equipment and damage it.

Required Events

1. The TSCA stack is a tall structure (100 ft)
2. High winds [> 90 mph wind (Ceilcote design criteria)] could generate high forces on the stack which might cause it to topple.

Preventive Measures

The following preventive measures exist:

1. Stress analysis were made to verify the stack strength.
2. Support guying cables constructed of strong material provide added support to the stack.
3. A coupon test program was completed to determine the effects on material strength in a humid atmosphere at elevated temperatures. An adequate factor of safety still existed after the test. This is dependent however, on proper guy wire tensioning. Design calculations show the proper tension. There is an Inspection Plan to verify that proper guy wire tensioning exists.
4. Tornado warning procedures are in place.

Stress analyses have been conducted by both the manufacturer, Ceilcote, and Energy Systems on the stack. Ceilcote in the original design effort did stress calculations to determine thickness of materials (included in Attachment 1 to L. D. McCullough letter dated January 2, 1990).[7]

Prior to installation of a second platform in 1986 for ease of sampling, Ceilcote revised calculations to assure acceptable strength in the stack (Attachment 2 to L. D. McCullough letter). In both cases, the manufacturer incorporated the effects of operating at elevated temperatures in their calculations.

Energy Systems had outlined two tasks in the fall of 1989 to obtain assurance the stack design was satisfactory. The first task was to verify the stack strength through a stress analysis utilizing published data for the materials of construction and downrating to incorporate elevated operating temperatures (Attachment 3 to L. D. McCullough letter). A factor of safety of 3.5 was calculated for the worse case condition which was wind loading. A seismic event would not generate as high forces on the stack as a 90-mph wind.

The second task for investigation was a coupon test program to determine the effects on material strength in a humid atmosphere at elevated temperatures. Energy Systems personnel developed a plan to obtain additional data (Attachment 4 to L. D. McCullough letter). Coupons were exposed to the outlined conditions and tested when full soaking of specimens was completed. Upon obtaining this coupon test

data, strength calculations were revised and assessed.

Tornado procedures are in place at the K-25 Plant so that shutdown procedures are in place to halt feed to the incinerator upon receiving such a warning.

Mitigative Measures

There are no mitigative measures.

Probabilities

Stress analyses have been conducted by both the stack manufacturer, Ceilcote, and Energy Systems on the stack (Appendix). From these analyses, it has been determined that the probability of the stack falling is extremely low (A).

Consequences

The postulated accident caused by the stack falling has the potential for low consequences on operating personnel.

5.3.7.3 Liquid Waste Feed Pump Failure (PS-3) [New]

This project scope involves the use, as aqueous liquid waste feed pumps, of Wilden single-seal double-action air diaphragm pumps. The Wilden air diaphragm pump is designed to pump with high particulate content. The primary and secondary liquid waste feed pumps were originally Tuthill rotary lobe positive displacement mechanical pumps and have been replaced (9/90) with four other mechanical pumps. It is anticipated that the aqueous waste feed pumps will also be replaced with mechanical pumps in the near future.

Uranium-contaminated material is processed in the incinerator. However, with the Criticality Safety Approval (CSA) limits in place, there are no fissile material safety concerns involved in the use of a diaphragm pump. The primary safety concern is the potential of an uncontrolled formation of an explosive vapor mixture resulting from a diaphragm failure. The vapor/liquid released may also be a radioactive and/or hazardous/toxic material, because although there are administrative control in place to restrict the handling of organic wastes through these pumps, there is some temporary piping in place whereby some organic wastes might possibly get into the pumps.

One failure scenario for the Wilden air diaphragm pump was considered:

- Elastomeric diaphragm (air/aqueous liquid waste with organics) - In the case of the failure of the elastomeric diaphragm, the aqueous liquid waste would leak to the atmosphere with an accompanying air leak. This vapor/liquid/air leak would be visible and audible to anyone in the tank farm area. There would also be a complete loss of pumping action.

Required Events

- Elastomeric diaphragm (air/aqueous liquid waste with organics) fails.
- Ignition source for fire scenarios.

Preventive Measures

- There are administrative controls in place to restrict the handling of organic wastes through the Wilden air diaphragm pumps.

Mitigative Measures

- K-25 Fire Department is near site to put out fire.

Probabilities

The probability of a Wilden aqueous waste feed pump failure is in the medium, C, range (1 per 10 yr to 1 per 100 yr).

Consequences

The postulated aqueous waste feed pump accident causing personal injury or damage to the environment has the potential for low, 3, consequences.

5.3.7.4 Burns/Exposure in SCC and SCC Crossover Section (I-9) [New]

In processing solids materials, a small portion of the dirt is carried over into the secondary combustion chamber (SCC) and quench chamber. There is a potential safety problem with slagging and/or hot ash build-up on the walls of the SCC or slag or hot ash build-up in the crossover section. If this occurs, it could have potentially serious consequences. There have been several incidents in incinerators in the last two years where people have been killed or seriously injured by falling slag or hot ash.*

Required Events

- Facility running at temperatures at RCRA temperatures (primary combustion temperature 1550°F and secondary combustion temperature 1850°F).
- Slag and/or hot ash build-up.
- Personnel entering area having slag and/or hot ash build-up and having it fall on them.

Preventive Measures

The following preventive measures exist:

- A facility Standard Operating Procedure (SOP) entitled "Incinerator Shutdown for Effluent Side Inspection and Maintenance" requires the system to be taken to TSCA operating temperatures

* FOCUS Environmental Comments during review of TSCA facility by independent incineration experts. (Nov. 1989)

(primary combustion temperature 1800°F and secondary combustion temperature 2200°F) prior to shutdown if visual inspection deems this necessary to reduce the amount of slag or hot ash in the SCC or SCC crossover section.

- Administrative controls are provided over the procedure whereby personnel entrance into the incinerator is first at the SCC crossover to permit visual inspection of the crossover and then both downcomer sections of the SCC. Only after removal of slag in the downcomer sections is entrance into the mix chamber and primary combustion chamber (PCC) permitted.

Mitigative Measures

Mitigative features exist with respect to the postulated burns/exposure accident caused by the falling slag or hot ash:

- When utilizing the sample ports for slag build-up observation, a protective face shield and gloves will be worn, and the appropriate protective measures for working around hot surfaces are observed.
- It is ensured that temperature indicators must show values lower than 100°F before allowing the incinerator components to be opened.
- A Confined Space Entry permit is required before entering incinerator components.

Probabilities

Following the SOP entitled "Incinerator Shutdown for Effluent Side Inspection and Maintenance" with administrative controls should place the probability for a falling slag safety problem in the medium range (1 per 10 yr to 1 per 100 yr).

Consequences

By exercising administrative controls, the postulated burns/exposure accident has the potential for low consequences on operating personnel.

5.4 Natural Phenomena

Natural phenomena are not considered significant factors in the safe operation of the incineration facility. Therefore, the postulated accidents (N-l, N-2, and N-3,) described in Appendix F are expected to have an extremely low probability of occurrence. The [New] scenario N-4 has a higher probability. The following evaluations are based on available site information.

5.4.1 Earthquake

The DOE Oak Ridge Reservation lies in Seismic Zone 2, which is an area of moderate activity. Scattered earthquakes occur in the region, but there are no identifiable capable faults that could be expected to produce significant surface displacements or differential ground motion anywhere within 200

miles of the site. Several studies of the sites in the Oak Ridge area have been made to determine likely peak horizontal ground acceleration values and their differential ground motion.

Report K/BS-1025 RI includes the seismic history of the region and the correlation between geologic structures in the area and the historic epicenters.[7] The report discusses the seismic hazard studies that have been conducted specifically for the Reservation. According to the report, the most recent study has indicated that the major potential for earthquake damage to the Reservation area is the seismic source zone of the Valley and Ridge province. However, although there is considerable microearthquake activity occurring in the area, none of the activity can be attributed to known faulting.

On the basis of the many seismic hazard studies, an Oak Ridge seismic hazard curve has been established to represent a realistic best estimate of the seismic hazards for the area. The curve depicts effective peak ground acceleration (EPGA) values and the corresponding recurrence intervals. The EPGA levels for a 100-year, 500-year, and 1,000-year return period are approximately 0.06g, 0.12g, and 0.15g. (Reference 7)

The incineration facility structures are designed to meet the project seismic design criteria of 0.08g EPGA. This EPGA value is based on a 90% probability of non exceedance for the Oak Ridge area during a 25 year project life and corresponds to a 237 year recurrence interval. Effects from a seismic event are expected to be bounded by the major fire in the tank farm accident scenario PS-2M.

5.4.2 Tornadoes and Extreme Winds

Tornadoes and high winds are rare in the region. The facility is designed to meet a high wind criterion of 100 miles an hour. Reference 8 (Y/EN-1036) suggests using a 500 year return wind speed (90% non exceedance during a 50 year recurrence interval) for design of new Oak Ridge area facilities which corresponds to a 72 mph design wind speed over unobstructed terrain or 51 mph straight wind speed over Oak Ridge terrain (other Oak Ridge values are 46 mph at 100 yr return period and 53 mph at a 1000 yr return period).

5.4.3 Floods

There is minimal risk of material releases due to flooding. The computed (TVA) probable maximum flood for K-25 is elevation 767.5 feet at Poplar Creek Mile 5.0 (Reference 9). The elevation of the incinerator site is approximately 800 feet. Since the facility is above the probable maximum flood level, there is no need to provide flood control barriers.

5.4.4 Lightning

One postulated accident scenario involving lightning is described briefly in Appendix F, listed in Table

5.4.4.1 Fire/Release Caused by Lightning Strike (N-4) [New]

Lightning strikes are a potential safety problem at the TSCA facility. In fact, a thunderstorm on May 1, 1990 caused lightning damage to several instruments at TSCA. If the lightning strikes equipment, fire from burning equipment could spread to adjacent equipment and possibly cause an explosion of waste material. A study[11] was made in an attempt to explain the reason for the damage that was done by the May strike. The report also recommended repairs as well as preventive measures that will preclude a repetition of this incident. These recommendations have been made. It must be noted, however, that lightning is unpredictable and in the event of a direct strike some damage could be sustained regardless of the precautions taken.

Required Events

- Direct strike by lightning during an electrical storm.
- Bad ground connections for lightning protection.
- Fire resulting from lightning causing equipment to burn and toxic material to be released.

Preventive Measures

The following preventive measures exist, see Aslinger report.[11, 12]

- The stack, the area of the TSCA facility determined to be the most vulnerable to lightning, is protected in accordance with NFPA78, "Lightning Protection Code," 1989 edition. It has been recommended that a consultant, certified by the Lightning Protection Institute, be retained to certify that the existing stack lightning protection, as well as the entire TSCA facility, is in accordance with NFPA 78.[12]
- Stack ground connections have been improved.

Probabilities

The probability for a fire/release accident caused by a lightning strike is in the high, D, range (1 per year to 1 per 10 years).

Consequences

The postulated fire/release accident caused by a lightning strike has the potential for low, 3, consequences on operating personnel.

5.5 Impact on Adjacent Operations

The tank farm poses a potential for a boiling liquid expanding vapor explosion (BLEVE). However, the probability of a BLEVE is extremely low because the storage tanks generally contain relatively high boiling point liquids and any fire would be extinguished well before BLEVE conditions could be reached. Additionally, the tanks have safety vents equipped with flame arresters and are stored under roof for protection from solar heat. The automatic water and manual foam systems would minimize the consequences of such an incident. Inspections ensure functional reliability of this fire protection system.

The possibility of an unconfined vapor cloud explosion (UVCE) was considered in a memorandum (August 20, 1986) by R. J. Koch and K. I. Roy. The probability of such an event was judged to be very slight since facility liquids are planned to be stored at low to atmospheric pressures and at temperatures below the atmospheric boiling points. A spill of such liquid(s) would not be able to generate the quantity of vapors necessary to create an UVCE. Unconfined vapor cloud explosions usually result from rapid leaks of flammable liquids under pressure at temperatures above their atmospheric pressure boiling points. Vapors must be generated at a rate sufficient to reach a concentration level in the explosive range. Fires are more likely to occur than are explosions if an unconfined vapor cloud should be ignited. A "worst-case" mixture was postulated for the facility that included isopropyl alcohol, methylene chloride, xylene, gasoline, paints and water. In addition acetonitrile was considered to be present in 4000 gallon tankers. Tank and storage operations are located in areas having natural ventilation. The presence of limited quantities of materials and the natural ventilation are additional factors that reduce the probability of an explosion.

Other potential impacts on adjacent operations are expected to be low because of the relative isolation of the K-1435 Incineration Facility from other ORGDP facilities.

5.6 Impact on Occupational Health and Safety

The review of the engineering design and descriptive documents identified various control technologies that ensure the protection of the health and safety of employees. These control technologies are discussed in Section 5.2 and include engineering controls, administrative procedures, and worker protection practices. In addition to the controls, the K-25 comprehensive health and safety program incorporates the K-1435 incineration facility. Any unsafe working conditions that are identified within the facility will be corrected in accordance with good health physics and industrial hygiene practices.

Several agents that may be encountered at the facility present a potential risk of cancer to workers; these include chloroform, benzene, carbon tetrachloride, and radionuclides. However, the potential of these agents to produce adverse health effects in workers is a function of the hazard presented by the agent (as determined by a dose-response function) and the potential for exposure to the agent. During normal process operations, the potential for worker exposure to these agents depends on the process encountered and the control technologies employed to prevent releases. The quantity of a hazardous material which is subject to dispersal in an accident depends on several factors, including initiating event,

operating state of the process
equipment, physical state of the material, and engineered protective features. The control technologies incorporated in the facility design, along with the K-25 comprehensive health and safety program, limit worker exposures to these agents and, therefore, limit the risk to the health and safety of employees.

5.7 Impact on Public Health[1]

The potential public health impact of the K-1435 incineration facility stems from the possible exposure of the general public to PCBs and their degradation products (polychlorinated dibenzodioxins or PCDDs and polychlorinated dibenzofurans or PCDFs) and to low-level ionizing radiation. Exposure to each of these is very low, even for the residents of the most exposed dwelling; but the serious nature of the health effects requires a detailed analysis of the potential impacts, which is presented in Section 4.5 of the Environmental Impact Statement. This analysis is complicated by the uncertainty involved in quantifying the dose-response relationship at such low exposures and by the fact that standards for public exposures have not been published for PCDDs and PCDFs.

Quantitative risk assessment for PCDDs and PCDFs yielded a lifetime risk of cancer mortality to the most exposed individual of about 8.5×10^{-6}; this estimate assumes a lifetime exposure to the maximum concentration expected from the incineration facility. Such estimates for PCBs were not calculated since an established dose-response relationship has not been published, but the risk is believed to be small.

Risk factors derived by the National Academy of Sciences Committee on Biological Effects of Ionizing Radiation for lowlevel radiation were applied to dosage estimates calculated by Oak Ridge National Laboratory to yield an estimate of lifetime risk to the most exposed individual; this estimate was 5×10^{-7} for cancer mortality due to the incineration facility. This can be compared to the normal cancer mortality risk of 1.64×10^{-1} for the U.S. population based on current mortality data.

References for Section 5 [Revised/New]

1. Final Environmental Impact Statement, Incineration Facility for Radioactively Contaminated Polychlorinated Biphenyls and Other Wastes, DOE/EIS-0084, United States Department of Energy, Oak Ridge, Tennessee, June 1982.

2. RCRA Part B Permit Application for K-1435 PCB/Hazardous Waste Incinerator, Martin Marietta Energy Systems, Inc., Oak Ridge, Tennessee, April 1985.

3. NIOSH "Current Intelligence Bulletin 45," February 24, 1986.

4. Clinton, J. H., Explosion Potential in TSCA Hopper Chute Feed System, Martin Marietta Energy Systems Inc., Oak Ridge, Tennessee; April 7, 1986.

5. J. H. Clinton, "Rapid Release from Molten Slag Fall, May 1, 1990 attachment 4. M. M. Heiskell, in letter to DOE, from J. R. Merriman, "Safety Concern of TSCA, Slag Fall From Walls of Secondary Combustion Chamber," May 4, 1990.

6. R. K. Wagenblast "Safety Assessment, Toxic Substances Control Act Incinerator, Metal Replacement Induced Draft Fan," K/D-SA-2149, August 2, 1990.

7. L. D. McCullough, Letter to C. E. Frye, "TSCA FRP Stack Strength", January 2, 1990.

8. Beavers, J. E., et al, Recommended Seismic Hazard Levels for the Oak Ridge, Tennessee; Paducah, Kentucky; Fernald, Ohio; and Portsmouth, Ohio, Department of Energy Reservations, K/BD-1025/R1, Union Carbide Corporation, Nuclear Division, Oak Ridge, Tennessee, December 1982.

9. Beavers, J. E., Hammond, C. R., Manrod, W. E., Recommended Straight Wind, Tornado and Wind-Generated Missiles Hazards for the Oak Ridge, Tennessee; Paducah, Kentucky; Fernald, Ohio; and Portsmouth, Ohio Department of Energy Reservations, Y/EN-1036, Martin Marietta Energy Systems, Inc., Oak Ridge, Tennessee, August 1985.

10. Oak Ridge Gaseous Diffusion Plant, Final Safety Analysis Report, K/D-5604 (Site:Section III), Martin Marietta Energy Systems, Inc., Oak Ridge, Tennessee, March 1985.

11. Dennis Aslinger, "TSCA Lightning Protection Assessment," May 1990.

12. J. L. Lawhorn, "Duffy Issues Resolution for TSCA", Transmittal No. TSCA-479, September 26, 1990.

6. QUALITY ASSURANCE

This section briefly describes the following quality assurance (QA) programs as they relate to the incineration facility:

- ORGDP Quality Assurance Program
- Engineering Quality Assurance Program
- Project Quality Assurance Assessment and Plan

6.1 ORGDP Quality Assurance Program

In keeping with the requirements of the DOE quality assurance program (DOE OR 5700.6),[1] Martin Marietta Energy Systems maintains "a cost-effective quality assurance program which will provide adequate confidence that items in the company are fit for their intended use."[2] The ORGDP program requires the performance of project QA assessments and the development and implementation of QA plans. If the assessment concludes that a potential failure has a significant or unknown consequences and that the probability of failure is high or uncertain, then additional actions are needed to lessen the probability of failure or to reduce the consequences of the failure. The project QA plan identifies these additional actions, the responsible organizations/persons, and the dates for completion of the actions.

6.2 Engineering Quality Assurance Program

The Engineering Quality Assurance Program is designed to be consistent with DOE and Martin Marietta QA guidelines described in References 1 and 2. The program is implemented uniformly through all phases of project planning, design, procurement, and construction and is an integral part of the Engineering system as

defined in the Engineering Procedures Manual and in the Engineering Quality Assurance Manual.[3] The QA requirements and responsibilities are described and delineated in the QA manual containing procedures related to all phases of a project. These Engineering QA procedures require complete reviews of all structures, systems, and components by appropriate plant organizations, including Engineering disciplines, Health Physics, Industrial Hygiene, Safety, Equipment Test and Inspection, and Environmental Management.

6.3 Project Quality Assurance Assessment and Plan

In compliance with the Engineering QA procedures, Martin Marietta personnel integrated quality assurance during all phases of the K-1435 Incineration Facility.

Engineering personnel, in collaboration with other project team members, assessed the incineration facility and planned the quality assurance in accordance with Engineering QA Procedure EQA-7, "Project Quality Assurance Planning." The Project Quality Assurance Assessment[4] identifies areas of concern for which QA plan actions are required. The Project Quality Assurance Plan[5] lists these actions required to prevent failure and to ensure that all structures, systems, and components function as designed.

6.4 Operational Quality Assurance

The K-1435 Incineration Facility is a new facility and is directed by the Chemical Operations Department Manager, who is located in Bldg. K-1420 and is in the ORGDP Plant Support and

Protection Division. The process equipment, process operations, and hazards associated with the K-1435 facility are similar to those for other operations that are and have been carried out by Chemical Operations. An operational QA assessment has been prepared for the K-1435 facility.[6]

References for Section 6

1. "Quality Assurance," DOE OR 5700.6, Department of Energy, Oak Ridge Operations, Oak Ridge, Tennessee.

2. "Quality Assurance Program," GP-5, Martin Marietta Energy Systems, Inc., Oak Ridge, Tennessee.

3. "Engineering Quality Assurance Manual," Martin Marietta Energy Systems, Oak Ridge, Tennessee.

4. "Project Quality Assurance Assessment, Compliance with Toxic Substance Control Act (TSCA)," K-QAA-54006, Martin Marietta Energy Systems, Inc., Oak Ridge, Tennessee, December 18, 1980.

5. "Project Quality Assurance Plan (PQAP) for Compliance with Toxic Substance Control Act, Project 83-N-402," K-QAP-54006, Revision 2, Martin Marietta Energy Systems, Inc., Oak Ridge, Tennessee, June 12, 1985.

6. "Quality Assurance Assessment/Plan for the K-1435 Incineration Facility Operations", (Incinerator QAP 1586-0002, Tank Farm QAP 1586-0003), June 1986.

7. CONDUCT OF OPERATIONS

7.1 Introduction

This section describes the framework within which the operation of the TSCA incinerator is conducted, the operational objectives of the facilities, the organizational structure, and the plant procedural guidance. It assures that the contractural obligation will be met for operating the facility in a manner that will not present undue risks to the employees, the public, or the environment.

7.2 Organization

The TSCA incinerator will be operated by the Chemical Operations Department at the Oak Ridge Gaseous Diffusion Plant (ORGDP). The ORGDP is operated by Martin Marietta Energy Systems, Inc. under contract to the DOE.

The Chemical Operations Department Manager reports to the Plant Support and Protection Manager as shown in Figure 7.2-1. In addition to TSCA Incineration Operation, the Chemical Operations Department performs decontamination, uranium recovery, metal finishing, oil decontamination, K-1421 Incineration Operations, and waste water treatment. Incinerator Operations will be directed by the Facility Manager who reports to the Chemical Operations Department Manager, as shown in Figure 7.2-2.

The department supervisors are responsible for training and directing the work force to safely and efficiently meet the production requirements established to satisfy DOE requirements and environmental regulations.

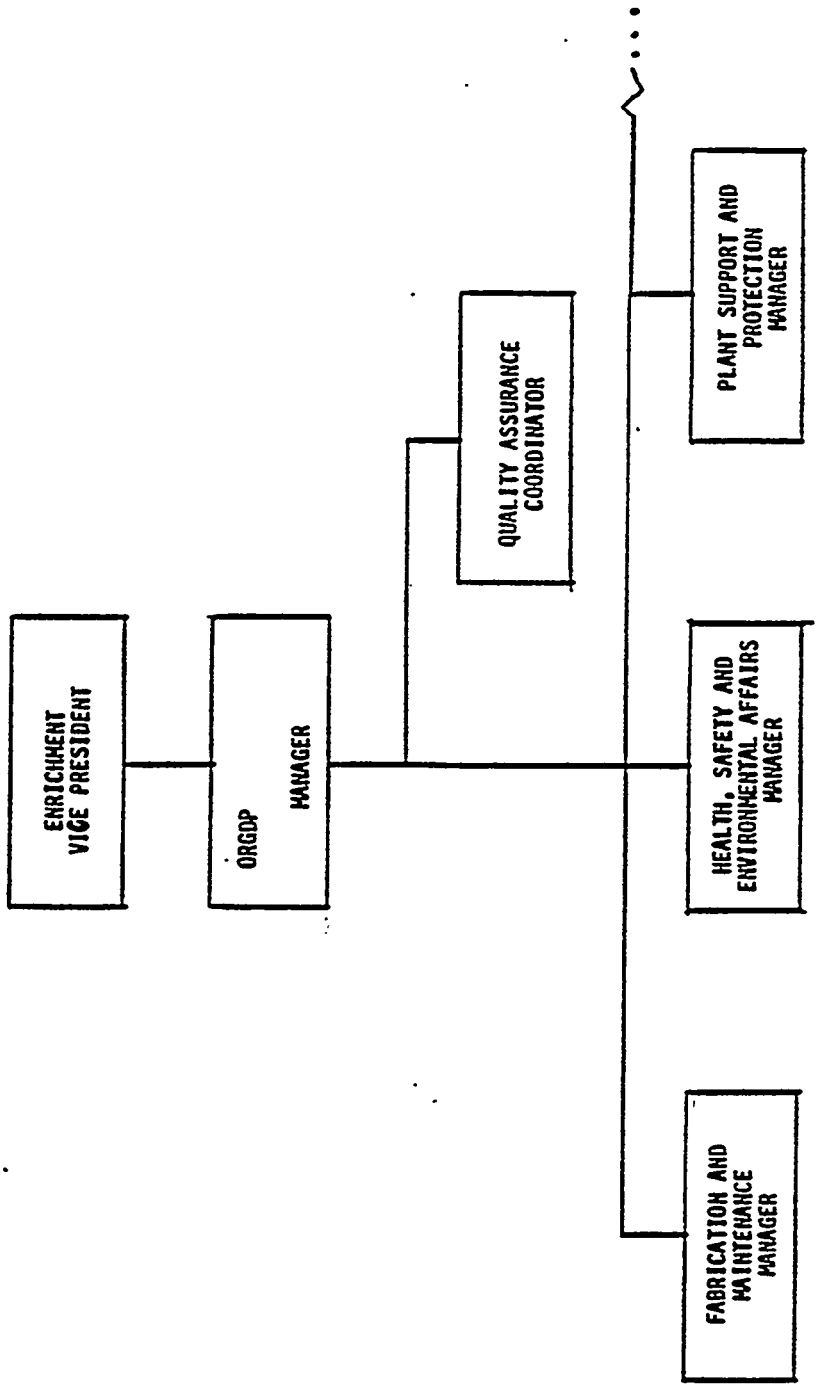

Figure 7.2-1. Organization of ORGDP

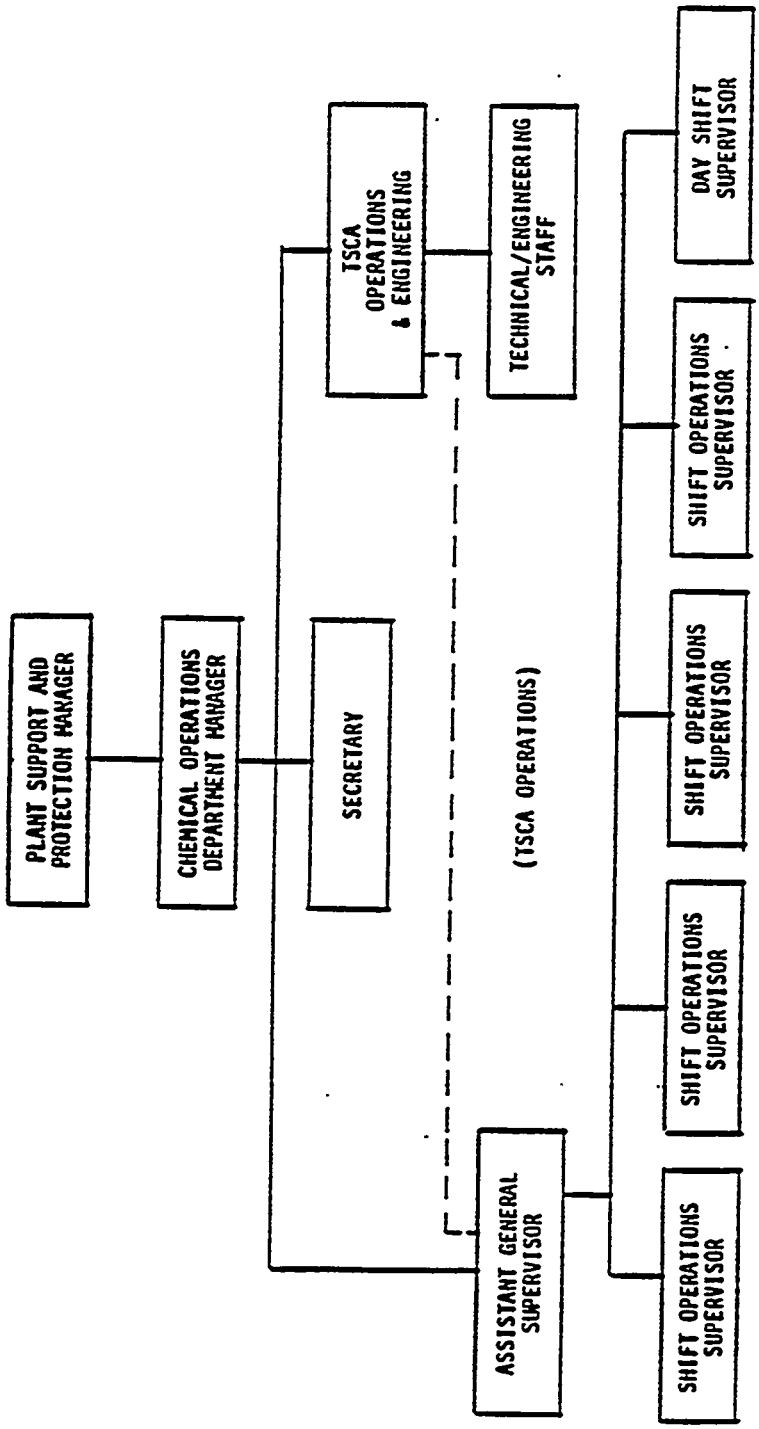

Figure 7.2-2. Organization of K-1435 incineration operations

Technical assistance and support are available from Energy Systems' Engineering; Health, Safety and Environmental Affairs; and Process Support Divisions.

Maintenance services are supplied by personnel in the Fabrication and Maintenance Division as shown in Figure 7.2-1. The maintenance divisions' craftsmen, who are responsible for facility repairs, and the operations division operators, who are directly responsible for operation of the facility, report to a line supervisor.

During periods other than the normal day shift, the shift operations supervisors report to the shift superintendent. The plant shift superintendent is a representative of the ORGDP Manager and is thus responsible for other plant functions on his shift, including Security and Plant Protection. He also serves as the plant emergency director. Operation and maintenance of the plant radiation alarm system and the environmental monitoring system is the responsibility of the Power and Shift Operations Department, which is located in the K-1650 Central Control Facility.

The operations organization is responsible for initiating all required maintenance activities. They remove the equipment from service and indicate maintenance requirements on a work order. Operations supervision will also issue safety work permits to identify potential hazards and precautions to be observed in performance of each order. Safety systems and safety system components are also identified on the safety work permit to assure compliance with configuration control requirements. However, no safety systems were identified for the K-1435 incineration facility.

7.3 Training

A training program is provided to personnel who are involved with the operation or maintenance of equipment required for safety. This program is designed to satisfy the requirements of DOE 5480.5 and DOE 5481.1B and supplements thereto. Newly assigned operators are given a general training course, including mathematics, electricity, nuclear criticality safety, health physics, and safety. The operators are also introduced to the concept of work orders and the electrical, safety, and hazardous work permit systems.

During the initial phases of incinerator startup, operators will receive formal in-class training from Chemical Operations technical personnel. In addition, the incinerator vendor will give operators, line supervisors, and a safety inspector intensive in-class and hands-on training. Besides safety, this training program will emphasize pertinent environmental regulations, incinerator operations, and data management computer operations.

After startup, those operators chosen for assignment at the incinerator facility are placed with an experienced operator for on-the-job training. During this period of their training, they receive additional formal training consisting of the use of combustion technology, incinerator operation, standard operating procedures, job safety analyses, and environmental regulations. A facility training manual is used that provides specific instructions on operational safety requirements (OSR) and facility operations.

Testing is used to provide feedback on teaching methods. Quantitative pass/fail scores are not established for operators. The decision on individual operator qualifications for facility

operation is made by the immediate supervisor in concert with line management.

Standard Operating Procedures for each facility are prepared to supplement the classroom instruction and provide a document for reference when the operator is on the job. During the class, the operator is also exposed to other procedures that are applicable to the facility. A periodic review of the procedures is conducted by the supervisor, and training drills are scheduled to practice reaction to an emergency. The functional responsibility for all training, reviews, and drills rests with the individual department superintendents. In addition, operator training is documented.

Maintenance craftsmen that are assigned to work in ORGDP facilities have received general classroom training in subjects such as mathematics, principles of electricity, instrumentation, and hydraulics. In addition, they also receive extensive training in their respective specialties of electrical, instrumentation, mechanical, or welding. Journeyman craftsmen have completed a formal apprenticeship program conducted through local unions or other major corporations prior to their employment at the ORGDP or in-house through Maintenance Training Programs. The time span from apprentice to journeyman is typically three to five years.

These craftsmen will have considerable experience in working with similar equipment in other systems. To assure correct maintenance of the facilities, approved Maintenance Engineering Procedures are used for work that involves safety systems. In addition, the Maintenance supervisors assure that applicable standard practice procedures and job safety analyses are followed.

7.4 Testing Program

The incineration system and tank farm will be functionally evaluated during preoperational testing using non-hazardous waste prior to operation with PCB and RCRA waste. In addition, the system will be required to demonstrate successful destruction of waste during TSCA and RCRA trial burns.

After startup, periodic testing by Operations, Maintenance, and Equipment Test and Inspection Department will assure continued satisfactory operation of the systems. Details of the testing requirements are provided in the ORGDP Chemical Operations procedures.

7.5 Configuration Control

Configuration control is a system to ensure that functional and physical characteristics of components, equipment, structures, and systems required for safety are identified and documented and that changes are identified, controlled, approved by authorized person, and documented. However, no safety systems were identified for the K-1435 incineration facility.

7.6 Procedures

Standard operating procedures have been developed for all phases of the TSCA Facility Operation. These cover each segment of the system for which they are written and include normal operating characteristics, abnormal conditions, corrective actions, and causes for system shutdown. Actions to be taken during emergencies are developed through joint planning between the facility supervision and the Power and Shift Operations Department, which directs the emergency planning function. Each operations department superintendent is responsible for the

development and review of the operating procedures and for assuring that these procedures are maintained in a up-to-date condition.

7.7 Safety Review and Documentation Program

It is the Martin Marietta Energy Systems policy to assure that the operation of the TSCA facility can be undertaken without undue risk to the safety and health of employees or the public and with adequate provisions for the protection of property and the environment. To assist in the implementation of this policy, a safety review and documentation program has been established, which is consistent with the requirements of Energy Systems and DOE established standards and procedures. The Director of Environment, Safety, and Health is responsible for the interpretation and administration of this policy.

7.8 Operational Safety Review Committee

To insure the TSCA facility has taken adequate measures to eliminate, control, or mitigate hazards, the facility's safety analysis and documentation will be reviewed by the ORGDP Environmental, Health, and Safety Council (EHSC). This council includes representatives for each of the following:

1. Radiation Safety
2. Industrial Hygiene
3. Engineering
4. Fire Protection
5. Equipment Test and Inspection
6. Environmental Protection
7. Industrial Safety
8. OSHA Coordinator
9. Medical

10. Power and Shift Operations
11. Plant Operations
12. Process Support
13. Criticality Safety
14. Transportation Safety
15. Quality Assurance

Representatives of the above organizations provide a review of safety issues. Council approval for all safety documentation reviews, preoperational reviews, and facility operation is signified by the signature of the council chairperson.

The EHSC assures that the plant.s environmental, health, and safety program and activities are conducted in accordance with Corporate, Plant, and DOE standards, policies, and procedures within the framework of available resources.

The EHSC reviews each proposal for a new/modified facility, operation, or process; submits safety and health requirements for it; and recommends its release for occupancy/use when safety and health considerations have been met# The EHSC performs independent reviews of Safety Assessments (SA), Preliminary Safety Analysis Reports (PSAR), Final Safety Analysis Reports (FSAR), and Operational Safety Requirements (OSR) and conducts or cooperates with groups that conduct preoperational and periodic facility reviews.

Facilities operating under OSRs are audited by a committee designated by the EHSC Chairperson. The findings of the committee are documented in a report to the EHSC, to the Health, Safety, and Environmental Affairs Division Manager, and to the Division Manager responsible for operation of the facility.

7.9 Nuclear Criticality Safety

An effective nuclear criticality safety program has been established in order to prevent unsafe accumulations of fissile materials within plant equipment and facilities and to use every practicable means to assure maximum nuclear criticality safety. The Criticality Safety Group performs the following activities.

The Criticality Safety Group will review appropriate controls to ensure the less-than-one-percent ^{235}U assay or less than 5 ppm of one percent or greater ^{235}U assay as specified in the criticality safety analyses/approvals.

The Criticality Safety Group provides technical assistance in the establishment of nuclear criticality safety limits and controls for all operations involving fissile materials. Requests for Criticality Safety Analysis are submitted and Criticality Safety Approvals are obtained on Form UCN-3446A. Replies from the Criticality Safety Group will be put into operating procedures.

The Criticality Safety Group performs periodic audits of plant facilities. The results of these inspections are reported in writing to appropriate operating supervision.

A team of representatives from the Criticality Safety Group and from the facility supervisors will annually audit each plant facility involved in processing enriched uranium. The results are recorded on Form UCN-9284, Nuclear Safety Survey; and the Criticality Safety Group retains a record copy of each survey at least three years for reference and continuity in future audits.

7.10 Emergency Planning

The plant shift superintendent on duty in the K-1650 Central Control Facility is the plant emergency director. In the event that an emergency at TSCA causes an off-site concern, the plant shift superintendent coordinates the immediate actions and the notification of DOE/Oak Ridge Operations. Each shift has a Plant Emergency Squad - a group of highly trained employees who report to the place of an emergency and function under the direction of the plant shift superintendent. This squad consists of Plant Support and Protection, Fabrication and Maintenance, and Health, Safety, and Environmental Affairs personnel. Drills are planned and conducted for these squads on a routine basis. The drills are attended by line supervision and a critique is held following the drill.

Pertinent emergency operating procedures are contained in the individual facility emergency manuals with copies maintained in the Shift Superintendent's office.

Emergency Equipment Cabinets are provided at facilities located throughout the plant. These contain respirators, self-contained breathing apparatus, impermeable suits, viton gloves, safety ropes, and fire blankets.

The plant emergency truck is also available. It carries Scott Air Packs, stretchers, and many other first-aid supplies. It is also equipped with axes, wooden plugs, survey meters, Jaws-of-Life, jacks, hammers, gloves, and a portable generator.

There is also an emergency storage area, which contains spill control equipment, boat/trailer and motor, a light source, portable generators, and three boxes equipped with material for off-site incidents. These boxes contain all types of equipment

such as wood plugs, hammers, jacks, sling hoists, gloves, boots, coveralls, and a high-intensity lantern.

Although a nuclear criticality is not expected, an action plan exists; prompt action is taken to rapidly evacuate all personnel from the affected area and make any operational changes possible to confine and control the reaction. Roadblocks and other boundaries are established at a minimum distance of 250 feet. The plant portals are considered as safe assembly points. Emergency aid and receiving stations are also provided.

The plant radiation alarm system, which monitors all buildings and storage yards which normally contain fissionable materials, is of the radiation dose sensitive type and would be the primary system used for detecting nuclear excursions, locating the source of an excursion, and to alert personnel in that general area.

7.11 Recordkeeping and Reporting

Records, instructions, and shift notes required for K-1435 operations are maintained in semipermanent log books. Procedures as described in Section 7.6 are documented and a procedure file is maintained. Safety-related records and logs are retained for five years for

- Safety reviews (DOE 5480.5)
- Incidents or investigations, (Administrative Controls)

Significant K-1435 progress and operational summary information is reported in the Chemical Operations Department monthly report. Any significant (unusual) occurrence is reported promptly to appropriate ORGDP and DOE personnel.

APPENDICES

A. Instrument Loops With Alarms and Interlocks (Deleted 4/88)
B. Combustion System Interlock and Shutdown
C. Interlock and Shutdown Schedule (Deleted 4/88)
D. Technical Report Fire Protection Memorandum
E. Qualitative Risk Analysis Methodology
F. Accident/Risk Table
G. Failure Modes and Effects Analysis
H. Probability and Fault Tree for Accident Scenarios
I. Process and Instrument Diagrams
J. Control Logic Flowsheets
K. Electrical Schematic Diagrams

DELETED 4/88

APPENDIX A

INSTRUMENT LOOPS WITH ALARMS AND INTERLOCKS FOR K-1435 INCINERATION FACILITY

(Deleted 4/88)

See Table 4.4-1

APPENDIX B
COMBUSTION SYSTEM INTERLOCK AND SHUTDOWN DESCRIPTION

See information in latest version of Process Control Description, Appendix B of Incinerator Operators Manual by IWES (Rev. 1; May 15, 1987)

APPENDIX B

COMBUSTION SYSTEM INTERLOCK AND SHUTDOWN DESCRIPTION

System and Master Interlock Device	Process Upset Events Triggering Shutdown of Master Interlock Device: System Interlock and Shutdown	Process Upset Events Triggering Shutdown of Master Interlock Device: System Integral Interlock/Permissives
1. Primary Combustion Chamber Control System BRN-501-1 Drawing IIE-81906D		
1.1 Primary Auxiliary Burner BRN-502 BRN-502 is the primary interlock device for primary combustion control system BRN-501-1. Shutdown of BRN-502 initiates a complete shutdown of primary combustion control system BRN-501-1.	Loss of secondary auxiliary burner BRN-517, CR-4 opens. Primary combustion chamber temperature high, TAH-900, I-77 or TE-906, I-76 Primary combustion air blower F-501 motor failure, I-70 Primary auxiliary burner combustion low pressure, PSL-1921, I-71 Rotary kiln low speed, SAL-910, I-79 Rotary kiln high pressure, PAH-950, I-75	Loss of flame-flame relay BR-11 opens. Low No. 2 fuel oil pressure, PSL-127* High No. 2 fuel oil pressure, PSH-128* No. 2 fuel oil low atomizing media pressure, PSL-277* No. 2 fuel oil high atomizing media pressure, PSH-279* No. 2 fuel oil low atomizing media differential pressure, PDSL-290* Low natural gas pressure, PSL-111** High natural gas pressure, PSH-117** *If oil/gas selector switch TY-907 in "oil" position. **If oil/gas selector switch TY-907 in "gas" position.
1.2 Primary Waste Burner BRN-501	Loss of primary auxiliary burner BRN-502, TDR-11 de-energizes. Stack gas monitoring system SGM-1 or or SGM-2, I-120, CR-12 opens in primary combustion control system BRN-501-1. Primary waste burner combustion air pressure low, PSL-1901 opens. Waste flow rate high, FAH-270, I-67, CR-FAH-270 opens. Waste flow rate low, FAL-270, I-66 CR-FAL-270 opens, initiating 5-second time delay in PLC from FAL-270.	Loss of flame-flame relay BR-12 opens. Low waste pressure, PSL-224 opens. High waste pressure, PSH-225 opens. Waste low atomizing media pressure, PSL-283 opens. Waste high atomizing media pressure, PSH-285 opens. Waste low atomizing media differential pressure, PDSL-291 opens.
1.3 Aqueous Waste Nozzle BRN-503	Loss of primary auxiliary burner BRN-502, TR-11 de-energizes and CR-15 opens. Aqueous waste flow rate high, FAH-410, I-62 Aqueous waste flow rate low, FAL-410, I-63, CR-FAL-410 opens, initiating 5-second time delay in PLC from FAL-410.	Aqueous waste pressure low, PSL-421 Aqueous waste pressure high, PSH-422 Aqueous waste low atomizing media pressure, PSL-287 Aqueous waste high atomizing media pressure, PSH-289 Aqueous waste atomizing media low differential pressure, PDSL-291
1.4 Sludge Waste Lance BRN-504	Loss of primary auxiliary burner BRN-502, TDR-11 de-energizes, CR-15 opens.	Low atomizing media pressure, PSL-287 High atomizing media pressure, PSH-289

System and Master Interlock Device	Process Upset Events Triggering Shutdown of Master Interlock Device: System Interlock and Shutdown	Process Upset Events Triggering Shutdown of Master Interlock Device: System Integral Interlock/Permissives
2. Secondary Combustion Chamber Control System BRN-516-1 Drawing IIE-81906E		
2.1 Secondary Auxiliary Burner BRN-517 BRN-517 is the master interlock device within combustion and burner management systems BRN-516-1 and BRN-501-1 and the master interlock interface device to total system interlock and shutdown schedule for combustion systems. Shutdown of BRN-517 initiates complete shutdown of secondary combustion chamber control system BRN-516-1, secondary waste burner BRN-516 and primary combustion chamber control system BRN-501-1, primary auxiliary burner BRN-502, primary waste burner BRN-501, aqueous waste nozzle BRN-503, and sludge waste lance BRN-504. Loss of secondary auxiliary burner BRN-517 initiates shutdown of secondary combustion chamber control system BRN-516-1 and primary combustion chamber control system BRN-501-1 whether loss of BRN-517 is due to integral interlock condition or to external system interlock and shutdown event. Final element devices initiated by interlocks/permissives are normally closed, energize-to-open safety shutoff valves FV-166 and FV-168 for natural gas fuel or safety shutoff valves FV-180 and FV-181 for No. 2 fuel oil and safety shutoff valve FV-192 for atomizing media which effect shutdown of fuel and atomizing media (on time delay by TDR-2) to burner BRN-517.	Loss of ID fan F-530 motor, I-119 Loss of ID fan flow, FDSH-1256, I-121 Loss of ID fan, vibration high high, XSH-1261, I-118 Quench chamber temperature high, TE-1201 I-112 Quench chamber process water flow low, FAL-1110, I-111 Quench chamber recycle liquid flow low, FAL-1150, I-113 Loss of secondary auxiliary burner combustion air, PSL-1961 Loss of secondary combustion air blower F-516 motor, I-102 Secondary combustion chamber temperature high, TAH-1000, I-96 or TE-1001, I-100	Loss of flame-flame relay BR-1 opens. Low No. 2 fuel oil pressure, PSL-177* High no. 2 fuel oil pressure, PSH-178* No. 2 fuel oil low atomizing media pressure, PSL-191* No. 2 fuel oil high atomizing media pressure, PSH-193* No. 2 fuel oil low atomizing media differential pressure, PDSL-195* Low natural gas pressure, PSL-161** High natural gas pressure, PSH-169** *If oil/gas selector switch TY-1004 in "oil" position. **If oil/gas selector switch TY-1004 in "gas" position.

System and Master Interlock Device	Process Upset Events Triggering Shutdown of Master Interlock Drive: System Interlock and Shutdown	Process Upset Events Triggering Shutdown of Master Interlock Drive: System Integral Interlock/Permissives
2.2 Secondary Waste Burner BRN-516 Final element devices initiated by interlock and loss of permissives are normally closed, energize-to-open safety shutoff valves FV-326, FV-327, and FV-337 which shut off fuel and atomizing media (on time delay by TDR-2) to burner BRN-516.	Loss of secondary auxiliary burner BRN-517, TDR-1 de-energizes. Stack gas monitoring system SGM-1 or SGM-2, I-20, CR-2 opens in secondary combustion control system BRN-516-1. Secondary combustion chamber temperature low, TAL-1000, I-97, CR-TAL-1000 opens. Loss of secondary waste burner combustion air pressure, PSL-1951 opens. Secondary waste burner waste flow rate high, FAH-320, CR-FAH-320 opens. Secondary waste burner waste flow rate low, FAH-320, CR-FAL-320 opens, initiating 5-second delay in PLC from FAL-320 alarm point initiation.	Loss of flame - flame relay BR-2 opens, loss of power on terminal 20. Low waste pressure, PSL-324 opens. High waste pressure, PSH-325 opens. Waste low atomizing media pressure, PSL-336 opens. Waste high atomizing media pressure, PSH-338 opens. Waste low atomizing media differential pressure, PDSL-340 opens.

Source: Operations Manual, "Section B - Process Control Description," IWES Project No. 8001, International Waste Energy Systems, April 25, 1986.

APPENDIX C

INTERLOCK AND SHUTDOWN SCHEDULE

(Deleted 4/88)

See Appendix J

APPENDIX D

TECHNICAL REPORT FIRE PROTECTION MEMORANDUM BY FACTORY MUTUAL RESEARCH

May 13, 1988

D-2

Factory Mutual Research

1151 Boston-Providence Turnpike
P.O. Box 9102
Norwood, Massachusetts 02062
Telephone (617) 762-4300
Telex 92-4415

April 10, 1986

Martin Marietta Energy Systems, Inc.
Post Office Box P
Oak Ridge, Tennessee 37831

Attention: Mr. W. H. Hermes, K-1550-W, MS-223

Subject: Technical Report Fire Protection Review
F.M. J.I. 0M0F9.CY
Subcontract No. 12K-97374V

Dear Mr. Hermes,

As requested during our telephone conversations of late March and early April 1986, enclosed are excerpts from the proposed report. The excerpts concern the combustion safeguards, programmable logic controller (PLC) and the combustion control system.

Basically, the combustion safeguards are hard wired (not through the PLC) and provide the conventional flame supervision and interlocks. The PLC controls and supervises the process for proper combustion conditions. The combustion safeguards become actively operational upon detecting improper fuel-air input and flame conditions. The combination of these two systems should provide suitable combustion and fuel explosion protection.

Very truly yours,

James M. Simmons

James M. Simmons
Senior Special Hazards Engineer

JMS:mc

Enc.: Excerpts

cc: FMRC File
A. Santos
J. S. Turner

II CONCLUSIONS

2.5 INCINERATOR AND OFF-GAS SYSTEMS AREA, K-1435-D

Excerpt

The burner management system design is completed and an electrical one-line diagram was provided with mechanical burner system. The combustion safeguard circuits and fuel train piping, together with the flame supervision and various interlocks, are acceptable in accordance with Factory Mutual and National Fire Protection Association Loss Prevention Guidelines, Standards and Codes for the kiln primary combustion chamber and secondary combustion chamber for the firing of natural gas, fuel oil, waste oil, aqueous waste and sludge waste.

The combustion safeguard circuitry operates independently of, but is supervised by, the programmable logic controller. The programmable logic controller with the combustion system instrumentation provides the operational control with supervision of the fuel-air inputs and combustion conditions. This enhances the control for safe operation. It provides indication of possible system trends permitting and causing corrective action to be taken. This corrective action would normally occur prior to conditions resulting in the operation of the safety interlock limits and the system safety shut-down status.

IV DESCRITPION

4.5 Incinerator and Off-Gas Systems Area, K-1435-D

Excerpt

Incineration will be in a refractory-lined, steel-shell, rotary kiln followed by a refractory-lined, steel-shell secondary chamber.

The rotary kiln primary combustion chamber will have four burners: 1) auxiliary natural gas or No. 2 fuel oil; 2) primary waste oil, (each with a natural gas pilot); 3) aqueous waste; and 4) sludge waste. Shredded material will be injected by a hydraulic ram and there will be a manual bottle drop chute. The fuel oil, waste oil and aqueous waste burners will have atomizing media of steam or air.

The combustion safeguard circuits are hard wired independent of the control system, although the control system will monitor burner operation and control operational starts and stops and rates of fuel and air inputs. Flame supervision is provided for the auxiliary natural gas or fuel oil burner and the primary waste oil burner using Honeywell R4138C-1018 combustion safeguards with C7012E ultraviolet scanner with the self-checking feature. Except for

the sludge waste burner, each burner has interlocks, including high and low fuel pressure, as well as high, low and differential atomizing media pressure. The sludge waste burner firing permissive is through the primary combustion control system (BRN 501-1).

The secondary combustion chamber will have two burners: 1) auxiliary natural gas or No. 2 fuel oil; and 2) secondary waste oil. These burners have combustion safeguards, flame supervision and interlocks essentially the same as the primary auxiliary burner and primary waste oil burner.

Each burner circuit has a permissive relay contact or contacts. Details of these permissives are listed on the P&ID drawings. For the kiln primary combustion chamber, the interlocks will cause shutoff of 1) waste oil burners on high or low flow; 2) aqueous burners on high or low flow; 3) all kiln burners on high kiln pressure or temperature or low kiln rotation speed; and 4) primary oil waste, aqueous waste and sludge waste on low kiln temperature.

For the secondary combustion chamber, the interlocks will cause shutoff of 1) secondary waste oil burner on high or low fire, 2) all kiln and secondary burners on secondary combustion chamber high or low temperature, and 3) all kiln and secondary burners when the surge vent opens; at the same time, the interlocks will open the thermal relief damper on loss of the gas cleaning equipment.

It is understood that, by means of the programmable controller and other permissive interlocks, the auxiliary burner will bring the kiln up to operating temperature and may be used to maintain this temperature range if other fuel inputs are not sufficient. The waste oil burner will be operated when the kiln is in the operating temperature range. The aqueous waste burner and sludge waste burner may operate only when the kiln is at proper temperature and either burner will start automatically upon shutdown of the waste oil burner or failure to maintain operating temperature in the kiln.

The combustion safeguards and limit devices are Factory Mutual approved where appropriate and available.

APPENDIX E

RISK ANALYSIS METHODOLOGY

Appendix E
Risk Analysis Methodology

A systematic approach was used in the accident analysis of the incineration facility and in the assessment of the associated risk. In the first step, qualitative judgments were made considering such factors as engineering and operating experience with similar systems or components, the design of the systems or components to accepted codes and standards, and standard or special applications of equipment. The second step involved a quantitative analysis of the higher risk accident scenarios where the probability was calculated (see Appendix H).

The actual basis for the entire accident analysis was a thorough design review of specific safety areas and failure modes, culminating in an accident risk table with the following items: accident number, hazard/accident, system/component, process function, failure modes/initiating events, preventive measures, mitigative measures, probability of occurrence, consequences, and risk level (See Appendix F).

Review of design drawings and of descriptive documents and discussions with ORGDP staff, engineering personnel, and project team members contributed to a consensus during the evaluation. Specific safety areas considered in the design review were toxic material safety, fire safety, explosion and high pressure safety, radiation safety, and criticality safety. Failure modes studied included failure of equipment/controls, operator error, fire/explosion, and natural phenomena. Review of safety areas and failure modes generated data for the "failure modes/initiating events" and for the "hazard/accident" scenarios postulated in the accident/risk table. Preventive and mitigative measures were identified for each failure mode/initiating event/accident. Each specific accident probability and

consequence were estimated according to probability and consequence scales. Then, a risk level was assigned to each postulated accident according to the risk matrix. Probability scales are listed in Table E-1, consequence definition in Table E-2 and the risk matrix is shown in Fig. E-1.

As defined by DOE Order OR5481.1B, risk is "a quantitative or qualitative expression of possible loss in terms of consequence severity and probability of occurrence."

A risk analysis is a systematic, logical evaluation of the risks associated with the operation of a facility or system. The estimated risk associated with normal operation of the incineration facility is small and is based on plant design, on projected plant operations, and on safety analyses. On the other hand, the risks associated with potential accident situations/upset conditions are greater and more difficult to assess than the risk associated with normal operation.

The approach used in assessing the risk levels associated with potential accidents involved a qualitative risk evaluation based on the data developed for the postulated accidents. The risk level for each accident was determined by using the probability scale (Table E-1), the consequence scale (Table E-2), and the risk matrix (Figure E-1). Then, each postulated accident was categorized in one of the four risk levels shown in the risk matrix.

Certain of the accident scenarios in the risk matrix represent a low or extremely low risk and as such are generally not discussed or analyzed further.

Other higher risk accident scenarios were subject to further review and documentation in this safety analysis report (SAR) on

Table E-1. Probability Rating Scale

Probability Scale	Description	Estimated Range of Probability of Accident Occurrence Annually
E Extremely High	Likely to occur one or more times per year	$p \sim 1.0$
D High	Likely to occur once every ten years	$10^{-1} \leq p < 1.0$
C Medium	Likely to occur once every 100 years	$10^{-2} \leq p < 10^{-1}$
B Low	Likely to occur once every 1000 years	$10^{-3} \leq p < 10^{-2}$
A Extremely Low	Occurrence is expected to be less than once every 1000 years	$p < 10^{-3}$

Source: DOE Order OR5481.1B

Table E-2. Hazard Rating and Consequence Definitions

Hazard Level	Maximum Consequence
7 Catastrophic	* Extremely serious impact onsite and offsite for lengthy periods of time * Large geographical areas as well as large population groups affected * Large numbers of fatalities, both onsite and offsite
6 Extremely High	* Extremely serious impact onsite, on large numbers of people and to the environment * Many fatalities onsite and possible fatalities to the public located on adjacent property * Moderate Impact beyond the exclusion area[a]
5 High	* Extremely serious impact onsite and considerable impact on the environment * Multiple fatalities to operating and other onsite personnel * Moderate health and safety concerns to the public located close to the site * Minor impact offsite beyond the exclusion area
4 Medium	* Serious onsite impact and significant impact within the exclusion area and to the environment * Fatality, severe injury, or severe illness to operating personnel * Significant health concern to workers at nearby facilities * Few people offsite seriously affected

Table E-2. Hazard Rating and Consequence Definitions (Continued)

3	Low	* Significant onsite but only minor offsite impact * Moderate injury or creation of moderate health concerns for operating personnel * Minor health and safety concerns for nearby facility workers * Slight contamination of offsite environs
2	Extremely Low	* Minor onsite but no offsite impact * Slight injury or illness to operating personnel * Local facility contamination which requires only routine procedures to control or correct * No health and safety concerns for workers at nearby facilities
1	Negligible	* Detectable onsite and no offsite impact * No identifiable safety and health consequences * Negligible contamination of the environment

[a] Exclusion area: The area surrounding the facility in which the owner has the authority to determine all activities including exclusion or removal of personnel and property from the area.

Source: DOE Order OR5481.1B

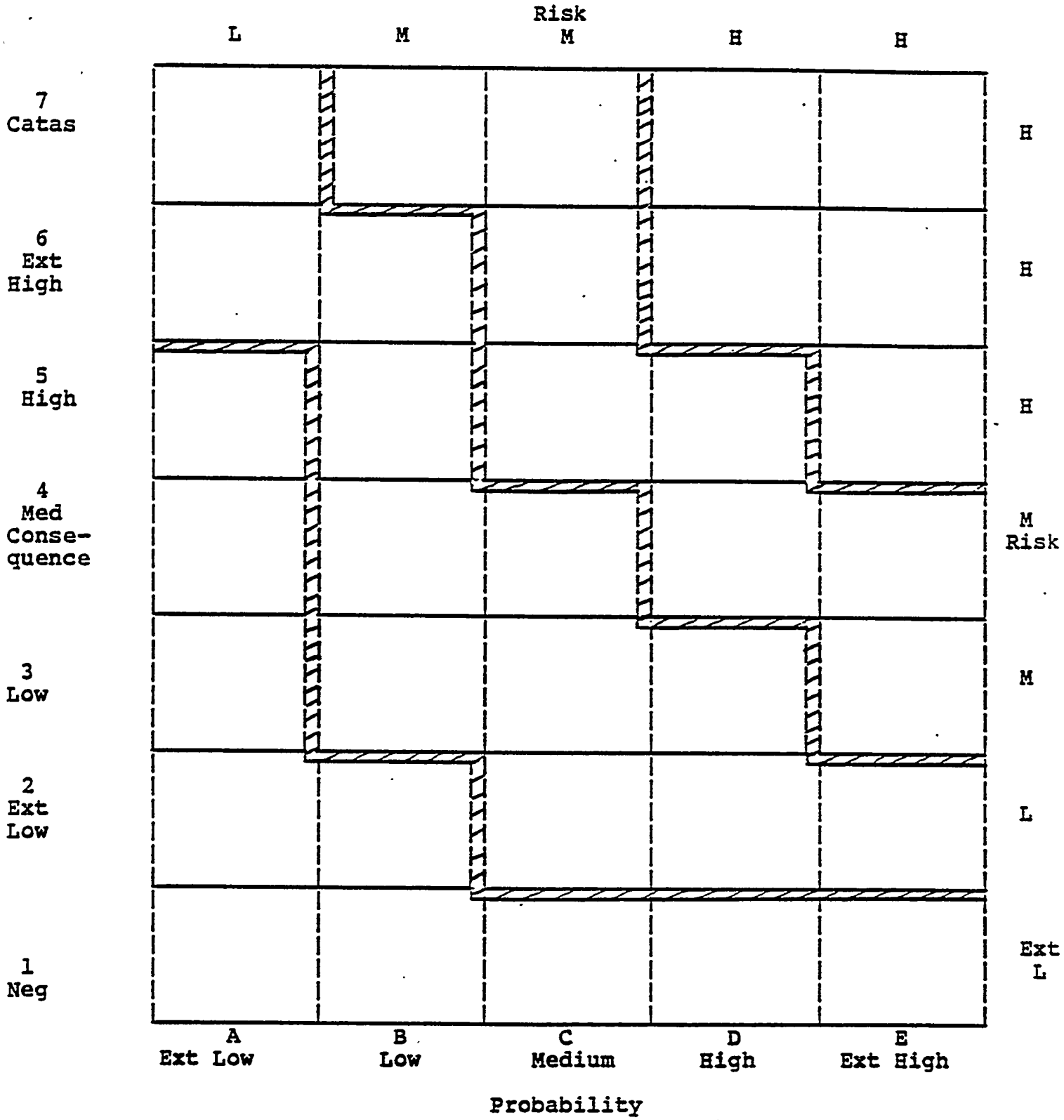

Figure E-1
Risk Matrix for DOE-ORO Projects

(Source: DOE Order OR5481.1B)

a case-by-case basis. These postulated accidents did not represent an unacceptable risk, and additional SAR documentation is provided in Appendix H. The objective of the documentation is to present the reasoning for the assigned risk level and then either (1) show that the postulated event does not represent an unacceptable risk or (2) justify the risk which lies somewhere between what are considered extremely low and medium risks.

Other accident scenarios could represent potentially higher risks. However, none were identified in this FSAR. Additional SAR documentation would be required for each event identified as having medium or high risk. The documentation would need to reaffirm (1) the accuracy of the assigned risk level, (2) justify the higher risk, or (3) recommend design or procedural changes to reduce the risk to a lower level.

APPENDIX F

ACCIDENT/SCENARIO TABLE

FOR

REVISION 2

March 16, 1991

Table F-1 (Update) Accident/Risk Table

Accident No.	Hazard/ Accident	System/ Component	Process Function	Failure Modes/ Initiating Events	Preventive Measures	Mitigative Measures	Probability of Occurrence	Conse-quence
RS-1	Chemical spill, Toxic chemical inhalation, Asphyxiant	Lift Truck	Unload drums	Fork penetrates drum Fork knocks drum off truck and lid falls Fork truck crashes into and breaches drums Operator carelessness	Operator training Throttle limiter on fork truck Drums withstand a fall of a few feet Adm. procedures	Unloading Area is curbed and sumped Personal protective equipment	Ext. High (E)	Ext. low (2)
RS-2	Fire	Lift truck	Unload drums	Same as above plus fire source.	Same as above plus ignition of vapors will not occur easily.	Same as above Fire protection system	Low (B)	Low (3)
RS-3	Fire	Tank truck	Transport of bulk waste liquids	Leaking valves on trucks, corrosion of valve, etc., results in large leak Spark	Nitrogen used to pump liquids from trucks Trucks inspected for leaks Any electrical equipment explosion proof per electrical codes Adm. procedures	Unloading Area is diked and sumped Fire protection system	Low (B)	Low (3)
RS-4	Liquid release of chemicals	Tank truck (full truck)	Transport of bulk liquids	Leaking valves, etc.	Trucks inspected for leaks Adm. procedures	Unloading area is curbed and sumped	Medium (C)	Ex. Low (2)
PS-1	PCB contamination Toxic chemical contamination due to a large spill	Receiving tanks T-201 thru T-206 Storage tanks T-207, T-208. T-209 Drum drain & Feed tanks, T-301, T-302, T305, T-306, T307. Associated pumps and lines	Receive, store, and transfer solutions of PCBs/ organics	Leaking lines, valves, tanks, pumps Material failure Overflow from tanks	Visual inspection High level alarm shuts down pump Emergency switches deactivate pumps Adm. procedures	Dikes and sumps in various areas	Medium (C)	Ex. Low (2)

OFFICIAL USE ONLY

OFFICIAL USE ONLY

Accident No.	Hazard/ Accident	System/ Component	Process Function	Failure Modes/ Initiating Events	Preventive Measures	Mitigative Measures	Probability of Occurrence	Conse-quence
PS-2	Large Fire and the consequent dispersal of PBCs	Same as PS-1	Same as PS-1	Leaking tanks Loss of nitrogen blanket in tanks Ignition source (elec. Spark, cigarette, etc.) Broken process line Overflowing tank	Flame arrestors Rupture discs Nitrogen blankets Low-level alarms shut off agitators to prevent friction spark Elec. Equipment per indus. codes for explosion/fire proofing Adm. procedures Fire protect. system High-level alarm, then high-high-level alarm shuts off pump	K-25 fire department Automatic water deluge sprinkler system with manual foam system	Low (B)	Low (3)
PS-3	Fire	Aqueous liquid waste feed pumps	Pumping aqueous liquid wastes	Elastomeric diaphragm fails	Administrative Controls to restrict handling organic wastes.	Near to K-25 Fire Department	Medium (C)	Ex. Low (2)
FP-1	Fire	X-301 dumping station (shroud)	Dump drums (one drum)	Loss of nitrogen Ignition source, elec. spark, friction spark, etc.	Nitrogen source for shroud Elec. equipment fire/explosion proof per industry codes non-sparking drum cutter	Blowout panels on walls Water sprinkler system	Medium (C)	Low (3)
FP-2	Explosion	Same as FP-1	Same as FP-1	Same as FP-1	Same as FP-1 Air Sweep	Same as FP-1	Low (B)	Low (3)
FP-3	Fire	M-415 Shredder	Shred drums	Flammable liquids remaining in drums after emptying Administrative procedures fail and liquid drum fed to shredder Nitrogen feed fails and O_2 monitors fail Ignition source (spark, etc.)	Liquid drums normally emptied Nitrogen feed and sensor interlocked with shredder Shredder enclosure blanketed with nitrogen Design reduces potential Administrative procedures prevent liquid drums from being fed	Automatic sprinklers actuated by high temp. alarm at nearby locations	Medium (C)	Low (3)

Accident No.	Hazard/ Accident	System/ Component	Process Function	Failure Modes/ Initiating Events	Preventive Measures	Mitigative Measures	Probability of Occurrence	Conse-quence
FP-4	Explosion	M-415 Shredder	Shred drums	Flammable liquid drum fed directly to shredder due to failure to follow procedures Loss of inerting system	Same as FP-3	Same as FP-3 Explosion panels	Medium (C)	Low (3)
FP-5	Explosion Fire a. Large Explosion b. Small Explosion c. Explosion	Shredded Product Hopper Shredded Product Enclosure (SPE) SPE Shredder Housing	Store shredded material	Nitrogen system fails Oxygen monitors fails Control panel fails Ignition source	Inert atmos. Oxygen monitors Oxygen monitors fail safe Oxygen less than 5 percent Control panel alerts operator Oxygen monitor system interlocked with. grapple and shredder	Sprinkler system	a. Low (B) b. Medium (C) c. Medium (C)	Medium (4) Low (3) Low (3)
FP-6	Personnel injury Toxic material release	Fans (5)	Movement or Dispersion of gaseous emmissions	Flying missiles cause injury to personnel. Projectiles damage equipment causing material release	Use of appropriate fan material for use in incinerator. Use of appropriate mounting pads.	Use of metal shroud to provide containment	Medium (C)	Low (3)
I-1	Burns from fire in drop chute	Bottle drop	Drop lab samples, etc., directly into incinerator	Bottle break in drop pipe and flashback	Entry port has cap on top and bottom Neg. pressure in pipe Dual lock entry system		Ex. Low (A)	Ex. Low (2)
I-2	PCB/organics contamination in ash water and eventually released	H-500 rotary kiln, CO-510 ash trough, T-601 ashwater tank, T-602 purge water tank, and sumps	Collect and monitor ashwater (and other sump water)	Low temp in primary (e.g., as a result of one or more clogged burner nozzles) Failure to detect hazardous chemical in subsequent tanks	Low temp control in primary ties into master interlock Burner ties into master interlock Water sampling in ashwater tank, sumps, and purge tank Activated carbon water treatment system Adm procedures		Medium (C)	Ex. Low (2)

OFFICIAL USE ONLY

Accident No.	Hazard/ Accident	System/ Component	Process Function	Failure Modes/ Initiating Events	Preventive Measures	Mitigative Measures	Probability of Occurrence	Conse-quence
I-3	Material failure in kiln due to high temp or corrosion, resultant breach in kiln disperses PCBs	H-500 rotary kiln	Primary combustion	Excess temp in rotary kiln Holdup of material in kiln Failure of temp alarms	Backup temp sensor ties into master interlock Alarm indicates sensor failure Periodic maintenance inspection of kiln Compatible kiln shell Adm. procedures	Off-gas treatment system	Ex. Low (A)	Low (3)
I-4	Low oxygen conditions in incinerator - discharge of toxic materials through vent or stack	H-500, H-515 incinerator, sweep air, F-501, F-516 air combustion blowers, F-530 induced draft fan	Destroy (oxidize) PCBs	Reduction of oxygen supply generates reducing conditions in incinerator Failures of fans, clogging of filters, or closing of makeup air inlet	Master interlock triggers: - low combustion air pres. for primary and secondary - low atomizing air pres. for burner BRN-517 - low pres. at induced draft fan - position of gratings above induced draft fan O_2 monitor of offgas Adm. procedures	Off-gas treatment system will tend to remove hazardous materials	Low (B)	Ex. Low (2)
I-5	PCBs are not destroyed and toxic materials are formed in incinerator due to low temp/reducing atm.	H-501, H-515 primary, and secondary incinerator	Oxidize PCBs	Low temp in H-501 and H-515 simultaneously Low temp in H-515 alone Low temp trigger for master interlock fails	Same as I-4 plus temp control system Low temp alarm		Medium (C)	Ex. Low (2)
I-6	Secondary vent opens and incinerator gases released directly to atmosphere	CA-515 thermal relief stack	Prevent excess temp and/or pres. in system	High temp alarms in quench trigger master interlock and open CA-515 Inadvertent CA-515 failure Power failure cause CA-515 to fail open Induced draft fan F-530 failure		Master interlock shuts off waste feed to incinerator Released gases not especially hazardous, assuming incinerator operating normally	High (D)	Low (3)

OFFICIAL USE ONLY

OFFICIAL USE ONLY

Accident No.	Hazard/ Accident	System/ Component	Process Function	Failure Modes/ Initiating Events	Preventive Measures	Mitigative Measures	Probability of Occurrence	Conse-quence
-7	Gas exposure	H-500 Rotary Kiln	Primary combustion	Rotary Kiln (RK) overpressure with subsequent gas releases from Kiln seals	Waste feed design minimizes potential for exceeding combustion capacity of incinerator. Waste feed characterization procedures prevent feeding wastes of unexpectedly high heat content values	Relief vents at entrance of RK and at exist of Secondary Combustion Chamber (SCC) relieves overpressure	Medium (C)	Low (3)
-8	Steam Overpressure Explosion	SCC/Ash Quench	Secondary combustion of Kiln offgases + secondary liquid wastes	Running below TSCA temperature. Slag/hot ash buildup. Large block of molten slag falls into wet quench tank and causes steam overpressure/explosion	Administrative controls to adhere to SOP: 1. System taken to TSCA temps. prior to shutdown if needed.	1. Relief vents at entrance of Kiln & exit of SCC relieves overpressure. 2. Relief vents and system volume mitigate overpressure.	Low (B)	Low (3)
-9	Burns/Exp source	SCC + SCC Crossover	Secondary combustion of Kiln offgases secondary liquid wastes	Running below TSCA temperature. Slag/hot ash buildup. Personnel entering area of slag/hot ash buildup.	Administrative controls to adhere to SOP: 1. System taken to TSCA temperature prior to shutdown if needed. 2. Personnel entrance into incinerator is first at SSC crossover. 3. Entrance to mix chamber and primary combustion chamber (PCC) permitted only after removal of slag in downcomer section.	1. Personnel protective equipment 2. Temperature indicators must show lower than 100°F before opening incinerator components. 3. Confined Space Entry Permit required before entering incinerator components.	Medium (C)	Low (3)
-10	Explosion	Secondary combustion chamber	Secondary combustion	1. Natural gas supply valve leaks. 2. SCC fills with natural gas. 3. Combustible mixture is not purged. 4. Explosion occurs.	1. Purge control system	1. Relief vents at entrance of Kiln and exit of SCC relieve overpressure.	Low (B)	Low (3)

OFFICIAL USE ONLY

OFFICIAL USE ONLY

Accident No.	Hazard/ Accident	System/ Component	Process Function	Failure Modes/ Initiating Events	Preventive Measures	Mitigative Measures	Probability of Occurrence	Conse-quence
OG-1	Off-gas release via equipment breach	T-501 Quench tower, T-505 venturi, T-515 packed bed or T-520 ionizing wet scrubber	Off-gas treatment	High temp incinerator High-temp alarm and master interlock failure Corrosion of equipment Loss of water supply for off-gas treatment equipment especially quench tower Clogging of strainers	High-temp alarms trigger master interlock Low- and low-low level water alarms trigger master interlock Level controls assure water supply Backup water supply Routine cleaning of strainers and replacement of spray nozzles Adm. procedures.	Released gases not especially hazardous assuming incinerator functioning properly Master interlock shuts down system for a variety of off-gas related alarm triggers	Low (B)	Ex. Low (2)
OG-2	Release of improperly treated off-gas	Venturi scrubber (VS), packed bed scrubber (PBS), Ionizing wet scrubber (IWS)	Off-gas treatment	VS and/or PBS and/or IWS functions improperly due to low water supply, shifting of material (PBS), or loss of power (IWS) or clogging	Variety of level alarms/controls for water supply Pres drop alarms for VS and PBS Power alarms for IWS Routine maint. and replacement Stack gases monitored Power monitored	Masters, interlock shuts down system for many off-gas-related triggers Released gases not especially hazardous, assuming incinerator functions properly	Medium (C)	Ex. Low (2)
OG-3	Fires/Fumes	T-501 Quench Tower, T-505 venturi, T-515 packed bed, or T-520 ionizing wet scrubber	Off-gas treatment	Ignition and burning of fiberglass equipment	1. Thermal relief of valve opens. 2. Intentional shutdown of incinerator. 3. Water in some equipment. 4. ATLAC 711-058 is most fire-resistant resin available for FRP construction rated at 15 in the ASTME-84 Tunnel Test.	Close availability of K-25 Fire Department	Low (B)	Low (3)
OG-4	Explosion	T-520 Ionizing Wet Scrubber	Off-gas treatment	Dropping of drum of solid waste in RK containing excess high volatile high Btu liquid. CO buildup. Ignition source, elec. spark, friction spark, etc.	Drums shredded before feeding intc RK Automatic IWS electrical cut off triggered by a CO level of 3000 ppm.	Explosion panels in sides of IWS stages	Medium (C)	Low (3)

OFFICIAL USE ONLY

OFFICIAL USE ONLY

Accident No.	Hazard/ Accident	System/ Component	Process Function	Failure Modes/ Initiating Events	Preventive Measures	Mitigative Measures	Probability of Occurrence	Conse-quence
)G-6	Release of material	Industrial draft fan	Direct gaseous emissions	1. Induced draft fan failure. 2. Personnel injury by flying missiles. 3. Toxic material release.	1. Use of Hastelloy C-22 (alloy) for fan construction. 2. New mounting pad. 3. Continued use of soft-start motor starter.	Double-walled corrosion-resistant metal shroud	Medium (C)	Low (3)
)G-7	Material release	Stack	Received water saturated flue gas and vents atmosphere	Stack falling from high (90 mph) winds	1. Stress analysis made to verify stack strength. 2. Support guying cables installed. 3. Coupon test program to determine effects of material strength in humid atmosphere at elevated temperatures. 4. Tornado warning procedures in place.	None	Extremely Low (A)	Low (3)
N-1	Massive leaks in storage tanks Rupture of incinerator and off-gas system	All receiving/ storage/feed tanks Incinerator Off-gas system	Destroy PCBs	Earthquake exceeding design base, with Fracture of dikes Loss of power	Plant designed to withstand design base earthquake See Section 5.4.1		Extremely Low (A)	Low (3)
N-2	Massive leaks in storage tanks Rupture of incinerator and off-gas system	All receiving/ storage/feed tanks Incinerator Off-gas system		Tornado	See Section 5.4.2		Extremely Low (A)	Low (3)
N-3	Fire in storage tanks with dispersal of PCB	Receiving/ storage tanks	Store hazardous liquids	Lightning strikes storage tank resulting in fire	Approved electrical grounding of equipment Lightning rods		Extremely Low (A)	Low (3)
N-4	Fire/Release from Lightning Strike	TSCA facility	Combustion of toxic materials	1. Direct lightning strike during electrical storm. 2. Bad ground connection. 3. Fire resulting from lightning strike causing toxic material release.	1. Stack protected in accordance with NFPA 78, "Lightning Protection Code, 1989 ed. 2. Improved stack ground connections. 3. Improved ground connections for cable trays running throughout incinerator area. 4. Lightning protection upgrading for K-1435-A, B, C. 5. Install static line over south end of K-1435-D area.	--	High (D)	Low (3)

OFFICIAL USE ONLY

OFFICIAL USE ONLY

APPENDIX G

Failure Modes and Effects Analysis

Revision 1

March 13, 1987

International Waste Energy Systems
St. Louis, Missouri

G-2

May 13, 1988

TSCA OAK RIDGE PCB INCINERATOR SYSTEM

FAILURE EFFECT MODE ANALYSIS

March 13, 1987

Revision 1

INTERNATIONAL WASTE ENERGY SYSTEMS
ST. LOUIS, MISSOURI

G-3

May 13, 1988

I. INTRODUCTION

Failure Mode and Effect Analysis (FMEA) is an inductive analysis technique useful for understanding the behavior of a system when one or more system components fails to operate properly. FMEA is helpful in determining the critical nature of certain components and, conversely, in indicating the relative unimportance of other components.

In this analysis, the objective is to provide an understanding of system interactions, to determine critical items of equipment from a reliability/availability standpoint, and to assure or verify that the "overall system" will be available for steady-state operation for 304 days per year (or 83 percent availability).

This discussion is limited in scope to a presentation of anticipated methodologies and a detailed definition of the problem. Updated analyses, as needed data are assembled, will provide the quantitative assessments needed to verify the absolute value of expected system availability and the suggested modifications if any, needed for upgrading to acceptable levels. Since much of the equipment comprising certain systems is custom-designed, historical data are not available to permit quantitative assessment. To the extent that such equipment or systems contain off-the-shelf components for which meaningful RAM data are available, or can be inferred, some measure of quantitative assessment for a subsystem may be possible.

II. DESCRIPTION OF SYSTEM

The system of interest in the present analysis is the incineration facility to be located at the Oak Ridge Gaseous Diffusion Plant in the K-25 Area and directly east of Building K-1425 on the Oak Ridge Reservation, Tennessee. This integrated facility for incineration and off-gas treatment of hazardous organic waste materials will provide for disposal of various materials including polychlorinated biphenyls which may be contaminated with low-assay uranium (<1 percent U235).

The system includes a solids processing and feed system, a liquids feed system, an incineration system (rotary kiln and secondary combustion chamber), an off-gas treatment system, and related instrumentation and controls.

As an aid to understanding the system, Appendix A contains P&IDs that show the equipment and associated instrumentation, controls, interlocks and alarms for the various major subsystems of the facility.

G-4

May 13, 1988

III. DEFINITIONS

A. Incinerator System Failure

Incinerator system failure, for purposes of this analysis, is defined as "the inability of the system to destroy wastes at rated capacity by burning (within the specified combustion condition limits) and properly to treat the combustion products". Further, it will be defined that at least the secondary combustion chamber and gas cleaning equipment must be available or the system will be considered as unavailable. It follows then that the critical equipment items are those which are listed in Table 1, in descending order of importance.

B. Pump/blower Component Failure

Pump/blower component failure is defined as failure of one of the following: 1.) electric motor or motor controls, 2.) mechanical seal or packing, 3.) belt, chain or coupling or 4.) bearings.

C. Line Element Failure

Line element failure is defined as failure of flow by one of the following methods: 1.) inadvertent closure of a hand valve, 2.) failure of a block valve or control valve to function properly or 3.) rupture of flange, hose or pipe.

D. Primary FMEA System

The primary FMEA system is defined as that essential to continued safe, stable operation at capacity of at least secondary liquid waste in a manner adequate to meet all applicable codes and regulations. This would therefore include systems 1-4 in Table 1.

E. Minimum Combustion

This is defined as the minimum state required to maintain destruction of organics while shutting off all waste feeds. The secondary waste and primary waste burners are shut off, as well as sludge, aqueous and solids feed. In addition, the primary auxiliary burner and the primary combustion air blower will be shut off. Finally, the tertiary air damper will drive to fully closed. The secondary auxiliary burner will still maintain the temperature of the SCC automatically.

G-5

May 13, 1988

TABLE 1.

In descending order of criticality by system.

1. **Utilities and Services**

   A. Electrical Power
   B. Natural Gas
   C. Steam
   D. Compressed Air
   E. Nitrogen
   F. Process Water
   G. Emergency/Fire Water
   H. Potable water

2. **Central Control Panel**

3. **Gas Cleaning System**

   A. Quench Chamber
   B. Venturi/Demister
   C. Quench Recycle Pump System
   D. Crossflow Scrubber
   E. IWS System
   F. IWS Recycle Pumps
   G. ID Fan
   H. Caustic System

4. **Secondary Combustion System**

   A. Fuel Oil System
   B. Secondary Auxiliary Fuel Burner
   C. Secondary Waste Pump System
   D. Secondary Waste Burner
   E. Secondary Combustion Air Blower
   F. Secondary Burner Management System
   G. Refractories
   H. Emergency Relief Stack
   I. Combustion Process Controls

5. **Primary Combustion System**

   A. Primary Auxiliary Fuel Burner
   B. Primary Waste Pump System
   C. Primary Waste Burner
   D. Primary Combustion Air Blower
   E. Aqueous Waste Pump System
   F. Aqueous Waste Burner
   G. Sludge Pump
   H. Sludge Burner

TABLE 1 - Continued

5. Primary Combustion System - continued

   I. Primary Burner Management System
   J. Surge Vent
   K. Tertiary Air Damper
   L. Kiln Drive
   M. Ash Conveyor
   N. Ash Pit Water and Solids Removal
   O. Combustion Process Controls

6. Solids Handling and Feed Systems
   A. Drum Handling System
   B. Shredder
   C. Shredded Solids Conveyor
   D. Bulk Solids Conveyor
   E. Ram Feeder
   F. Liquid Waste Drain/Transfer System

IV. FMEA ANALYSIS

The total FMEA analysis will be performed by considering each component and subsystem in sequence with the systems defined by the listing in Table 1.

SYSTEM: UTILITIES AND SERVICES
PAGE: 1 OF 3

APPLICABLE DRAWINGS: I1E81906A-F

ITEM	FAILURE MODE	EFFECT	METHOD OF DETECTION	CORRECTIVE ACTION
A. Electric Power Powers all rotating equipment, IWS system and all controls.	Power failure at source or in feeders.	Automatic shutdown of all equipment and opening of emergency stack.	"UPS system in operation and multiple "motor stop" alarms on central control panel (CCP).	Restart after power restoration.
B. Natural Gas Provides fuel for normal operation of auxiliary fuel burners and pilots for all burners.	1. Line element failure. 2. Disruption by utility company.	Shutdown of all combustion systems.	1. Burner failure alarms in CCP. 2. Low gas pressure alarms at burner control panel (BCP).	Restart after restoration of gas flow.
C. Steam Provides atomizing media for normal operation of all pumpable liquid burners, fire protection for ram feeder and cleaning of drum dump screens.	1. Line element failure. 2. Boiler system failure.	Shutdown of all combustion systems using atomizing steam. If auxiliary burners are using natural gas they will remain on.	Low steam pressure alarms at BCPs.	Switch to use of compressed air for atomization in field and restart.

May 13, 1988

G-7

SYSTEM: UTILITIES AND SERVICES
PAGE: 2 OF 3

APPLICABLE DRAWINGS: I1E81906A-F

ITEM	FAILURE MODE	EFFECT	METHOD OF DETECTION	CORRECTIVE ACTION
D. Compressed Air Provides instrument air for process control, and also atomizing media for pumpable liquid burners on backup basis.	1. Line element failure. 2. Compressor or dryer system failure.	All air-operated valves and dampers will go to their fail position, all "bubbler" level transmitters will register low level, the stack O2 analyzers will go to a "fail" state, and TV cameras will lose purge air.	"Backup instrument air system on-line" alarm in CCP.	
E. Nitrogen Provides inerting media for solids handling equipment, motive force for drum handling equipment, blowdown media for liquid waste and fuel lines and inerting media for waste drain and storage tanks.	Line element failure or loss of supply.	Drum handling equipment will not operate. Solids handling equipment oxygen analyzers will signal "high oxygen" and shut down, if operating.	Low nitrogen pressure alarm on CCP.	Restart solids and drum handling after restoration of gas flows.

May 13, 1988

G-8

SYSTEM: UTILITIES AND SERVICES
PAGE: 3 OF 3

APPLICABLE DRAWINGS: I1E81906A-F

ITEM	FAILURE MODE	EFFECT	METHOD OF DETECTION	CORRECTIVE ACTION
F. Process Water Used for gas cleaning system makeup water, mixing chamber sump makeup water, hydraulic system and TV camera cooling media.	1. Line element failure. 2. Failure at process water pumps. 3. Strainer pluggage at gas cleaning train.	Emergency water valves will open in attempt to re-establish flow. Low process water flow to quench through voting logic will shut down ID fan, drive the system to "minimum combustion" and open the thermal relief vent.	1,2. Low process water pressure, low flow, and "emergency water on" alarms at CCP. 3. Low differential pressure switch at strainer.	1,2. Emergency water will be automatically turned on to provide water for the quench chamber. 3. Switch to spare strainer element and clean other.
G. Emergency/Fire Water Used as backup water for the quench chamber and also for fire protection.	1. Line element failure. 2. Failure at pump system.	The system will go to a "minimum combustion" state and the quench process water control valve (LCV-1120) will drive to 100% open.	Low emergency water pressure alarm in CCP.	Restart system after restoration of supply.
H. Potable Water Used for sanitary purposes as well as for safety showers.	1. Line element failure. 2. Failure at pump system.			

May 13, 1988

G-9

SYSTEM: CENTRAL CONTROL PANEL
PAGE: 1 OF 1

APPLICABLE DRAWINGS:

ITEM	FAILURE MODE	EFFECT	METHOD OF DETECTION	CORRECTIVE ACTION
A. Central Control Panel Provides monitoring and control functions for most aspects of the incineration system.	1. Taylor controller/ recorder/math unit failure. 2. Gould programmable controller (PLC) failure. 3. Panalarm alarm system failure. 4. Stack analyzer electronics failure.	1-4. Loss of some indicating, controlling, alarming or recording capability and possible partial or complete shutdown. 1. Loss of loop control, should go to failsafe mode. 2. Redundant PLCs will automatically back each other up in event of failure and send diagnostic alarm to printer. 4. Failure of any stack analyzer component will shut off waste feed.	Lack of control response, illogical alarms or incongruous data.	Replace failed component and restart system if necessary.

SYSTEM: GAS CLEANING
PAGE: 1 OF 5

APPLICABLE DRAWINGS: I1E81906F

ITEM	FAILURE MODE	EFFECT	METHOD OF DETECTION	CORRECTIVE ACTION
A. Quench Chamber Cools and saturates hot combustion gases by evaporation of process water and recycled scrubbing liquid.	1. Nozzle failure. 2. Loss of process water or recycle flow. 3. Outlet thermocouple failure.	1,2. System will drive to minimum combustion. High outlet temperature through voting logic will shut off ID fan and open TRV.	Low flow or high temperature alarms on CCP. Also low process water nozzle pressure alarm.	Restart system after repair.
B. Venturi/Demister Removes particulate and acid gas from combustion gases by the use of pressure drop and recycled scrubbing	1. Nozzle pluggage. 2. Loss of recycle liquid flow. 3. Damper or throat mechanism failure (fails closed). 4. Differential pressure controller or element failure. 5. Demister pluggage.	1,2. Loss of scrubbing efficiency. 3-5. Automatic shutdown of waste feed.	1,2. Low flow alarm on CCP. 3,4. High and low differential pressure. alarms on CCP. 5. High differential pressure between PI-1210 and PI-1230	Restart system after repair.

May 13, 1988

G-11

SYSTEM: GAS CLEANING
PAGE: 2 OF 5

APPLICABLE DRAWINGS: I1E81906F

ITEM	FAILURE MODE	EFFECT	METHOD OF DETECTION	CORRECTIVE ACTION
C. Quench Recycle Pump System Provides recycle of scrubbing liquid at a controlled pH to the quench chamber and venturi scrubber. Also discharges effluent to T-602.	1. Pump component failure.	1-3. Drives system to minimum combustion upon loss of flow.	1,3. Low flow alarm on CCP.	1. Switch to spare pump and repair other.
	2. Strainer pluggage.		2. High differential pressure alarm on CCP.	2. Switch to spare strainer and clean other.
	3. Line element failure.			3. Shut down system and repair.
	4. pH element or controller failure.	4. Potential loss of scrubbing efficiency.	4. High/low pH alarms on CCP.	4-6. Replace failed element.
	5. Blowdown flow controller or element failure.	5. Improper blowdown rate leading to recycle tank level problems or high suspended/dissolved solids.	5,6. High/low level alarms on CCP.	
	6. Recycle tank level controller or element failure.	6. High tank level overflows to fire water tank, low level will cause pump or flow failure.		

May 13, 1988

G-12

SYSTEM: GAS CLEANING
PAGE: 3 OF 5

APPLICABLE DRAWINGS: I1E81906F

ITEM	FAILURE MODE	EFFECT	METHOD OF DETECTION	CORRECTIVE ACTION
D. Crossflow Scrubber Removes the majority of acid gases by the use of recycled scrubbing liquid.	1. Nozzle pluggage.	Automatic shutoff of waste feed.	1,2. Low flow alarm on CCP.	Repair during shutdown.
	2. Loss of recycled liquid flow.			
	3. Packed bed pluggage.		3. Higher differential pressure on CCP indicator PDI-1225.	
E. IWS System Removes the majority of smaller particulate from the combustion gases by electrostatic and impaction mechanisms and by the use of recycled scrubbing liquid.	1. Nozzle pluggage.	1-3,5,6. Loss of scrubbing efficiency. Automatic waste feed shutoff.	1,2. Low flow alarms on CCP.	1-4,7,8. Repair during shutdown.
	2. Loss of recycled liquid flow.			
	3. Packed bed pluggage.		3. Higher pressure differential between CCP indicators PI-1230 and PI-1240.	
	4. Wire breakage.	4,7,8. IWS failure. Automatic waste feed shutoff.	4,7,8. "IWS fault" alarm on CCP.	
	5. Improper washing cycles.			5,6. Adjust IWS controls for better operation.
	6. Improper voltage/ amperage controls.			
	7. Purge heater failure.			
	8. Transformer failure.			

SYSTEM: GAS CLEANING
PAGE: 4 OF 5

APPLICABLE DRAWINGS: I1E81906F

ITEM	FAILURE MODE	EFFECT	METHOD OF DETECTION	CORRECTIVE ACTION
F. IWS Recycle Pump System Provides recycle of scrubbing liquid at a controlled pH to the crossflow scrubber and IWSs.	1. Pump component failure.	1-4. Potential loss of scrubbing efficiency.	1,3. Low flow alarms on CCP.	1. Switch to spare pump and repair other.
	2. Strainer pluggage.		2. High differential pressure alarm on CCP.	2. Switch to spare strainer and clean other.
	3. Line element failure.			3. Shut down system and repair.
	4. pH element or controller failure.		4. High/low pH alarms on CCP.	4,5. Replace failed element.
	5. IWS sump level controller or element failure.	5. High tank level overflows to fire water tank, low level will cause pump or flow failure.	5. High/low level alarms on CCP.	
[redacted] ID Fan [redacted] The induced draft fan produces the motive force to pull combustion gases through the gas cleaning train and also keep the combustion system under negative pressure.	1. Fan component failure.	1. Automatic shutdown of ID fan, opening of TRV, and forcing system to "minimum combustion".	1. Motor failure alarm on CCP.	Restart system after repair.
	2. DPSL-1256 failure.	2. Automatic shutdown of all combustion.	2. "Low fan differential pressure" alarm on BCP.	
	[redacted] High vibration [redacted]	[redacted]	3. High vibration alarms on CCP.	[redacted]
	4. Inlet damper mechanism failure (fails closed).	4. High pressure will automatically shut off waste feed.	4. PAH-950, high pressure alarm on CCP.	

SYSTEM: GAS CLEANING
PAGE: 5 OF 5

APPLICABLE DRAWINGS: I1B81906F

ITEM	FAILURE MODE	EFFECT	METHOD OF DETECTION	CORRECTIVE ACTION
H. Caustic System Delivers caustic solution to scrubbing system for pH control.	1. Pump component failure.	Loss of flow will decrease scrubbing liquid pH and acid gas removal efficiency.	1. If the pump stops, an alarm will sound on the CCP.	1. Switch to spare pump and repair other.
	2. Strainer pluggage.		2. DPSH-63 will sound alarm if strainer begins to foul.	2. Switch to spare strainer element and clean other.
	3. Line element failure.		3. Alarms AAL-1125, 1187 or 1130 will note a loss in pH control.	3. Shut down system and repair.

May 13, 1988

G-15

SYSTEM: SECONDARY COMBUSTION
PAGE: 1 OF 4

APPLICABLE DRAWINGS: I1E81906B,E

ITEM	FAILURE MODE	EFFECT	METHOD OF DETECTION	CORRECTIVE ACTION
A. Fuel Oil System Delivers fuel oil to auxiliary fuel burners.	1. Pump component failure.	Loss of flow will shut down combustion system if fuel oil is auxiliary fuel.	1. Loss of pump "run" light on CCP.	1. Switch to spare pump and repair other.
	2. Stainer pluggage.		2. DPSH-53 will sound if strainer begins to foul.	2. Switch to spare strainer element and clean others.
	3. Line element failure.		3. PSL-127 or 177 will note a loss in line pressure and shut down the burners.	3. Shut down system and repair.
B. Auxiliary Fuel Burner Provides for combustion of natural gas or fuel oil.	1. Burner gun pluggage.	Loss of combustion system operation.	1. High pressure detected by PSH-178.	1. Shut down system and repair.
	2. Flame detector failure.		2. "Flame failure" alarm at BCP.	
	3. Ignitor failure.			
	4. Fuel/air delivery system failure.		4. High and low pressure alarms on BCP.	

G-16

May 13, 1988

SYSTEM: SECONDARY COMBUSTION
PAGE: 2 OF 4

APPLICABLE DRAWINGS: I1E81906B,E

ITEM	FAILURE MODE	EFFECT	METHOD OF DETECTION	CORRECTIVE ACTION
C. Secondary Waste System Delivers secondary waste to burner.	1. Pump component failure.	Loss of flow will shut down secondary waste burner.	1. Loss of pump "run" light on CCP.	1. Switch to spare pump and repair other.
	2. Strainer pluggage.		2. DPSH-301 or 303 will sound if strainer begins to foul.	2. Switch to spare strainer element and clean other.
	3. Line element failure.		3. PSL-324 will note a loss in line pressure and shut down the burner.	3. Shut down system and repair.
D. Secondary Waste Burner Provides for combustion of secondary waste.	1. Burner gun pluggage.	Loss of combustion system operation.	1. High pressure detected by PSH-325.	Shut down system and repair.
	2. Flame detector failure.		2. "Flame failure" local alarm on BCP.	
	3. Ignitor failure.			
	4. Fuel/air delivery system failure.			
E. Combustion Air Blower Provides combustion air to auxiliary fuel and secondary waste burners.	1. Blower component failure.	Loss of combustion air pressure will shut down all burners.	1. A motor failure or blower stoppage will result in a "burner fail" alarm on the CCP and BCP.	Shut down and repair.
	2. PSL-1961 failure or blower pressure loss.		2. A "low pressure" alarm will sound on the BCP.	

SYSTEM: SECONDARY COMBUSTION
PAGE: 3 OF 4

APPLICABLE DRAWINGS: I1E81906B,E

ITEM	FAILURE MODE	EFFECT	METHOD OF DETECTION	CORRECTIVE ACTION
F. Burner Management System Provides all burner interlocks, fuel pressure control and flow measurement.	1. Flowmeter failure.	1. Shutdown of waste burner.	1. "Low flow" alarm for waste on CCP.	1. Switch waste flowmeters through CCP and restart.
	2. Pressure switch failure.	2-5. Shutdown of affected burner.	2,3. Pressure alarm on the BCP.	2,3,5. Shut down and repair.
	3. Regulator failure.			
	4. Strainer pluggage.		4. Low flow or pressure alarm.	4. Clean strainer and restart.
	5. Motorized valve failure.		5. Burner inoperable.	
G. Refractory Provides thermal insulation to conserve heat and to protect the steel chamber walls.	Localized loss.	Localized red-hot spot on the steel shell.	1. Refractory bricks or fragments noted in ash conveyor discharge. 2. Operator detection of glowing hot spot at night. 3. Burned or peeling paint on steel shell. 4. Operator detection of excessive heat flux from shell. 5. Periodic scan of shell with infrared thermometer.	Orderly shut down for repair.

May 13, 1988

G-18

SYSTEM: SECONDARY COMBUSTION
PAGE: 4 OF 4

APPLICABLE DRAWINGS: I1E81906B,E

ITEM	FAILURE MODE	EFFECT	METHOD OF DETECTION	CORRECTIVE ACTION
H. Emergency Relief Stack Provides a means for hot flue gas to escape without damage to air pollution control train.	1. Magnet failure. 2. Loss of electric supply. (Stack damper fails open via counterweight)	Shuts down ID fan and drives system to minimum combustion.	"Open" alarm on CCP.	Restart system after repair.
I. Combustion Process Controls Provides temperature and pressure control for combustion chamber	1. Thermocouple failure. 2. Draft transmitter element failure.	1. Thermocouples fail high and shut off all combustion systems. 2. Draft transmitter elements would fail to high pressure and shut off waste feed.	1. "High temperature" alarm on CCP. 2. "High pressure" alarm on CCP.	1. Switch to spare thermocouple element through CCP and restart. 2. Restart system after repair.

May 13, 1988

G-19

SYSTEM: PRIMARY COMBUSTION
PAGE: 1 OF 5

APPLICABLE DRAWINGS: I1E81906 A,C,E

ITEM	FAILURE MODE	EFFECT	METHOD OF DETECTION	CORRECTIVE ACTION
A. Auxiliary Fuel Burner Provides for combustion of natural gas or fuel oil.	1. Burner gun pluggage.	Loss of combustion system operation.	1. High pressure detected by PSH-117 or 127.	Shut down system and repair.
	2. Flame detector failure.		2. "Flame failure" alarm at BCP.	
	3. Ignitor failure.			
	4. Fuel/air delivery system failure.		4. High and low pressure alarms on BCP.	
B. Primary Waste System Delivers primary waste to burner.	1. Pump component failure.	Loss of flow will shut down primary waste burner.	1. Loss of pump "run" light on the CCP.	1. Switch to spare pump and repair other.
	2. Strainer pluggage.		2. DPSH-201 or 203 will sound if strainer begins to foul.	2. Switch to spare strainer element and clean other.
	3. Line element failure.		3. PSL-224 will note a loss in line pressure and shut down the burner.	3. Shut down system and repair.

SYSTEM: PRIMARY COMBUSTION
PAGE: 2 OF 5

APPLICABLE DRAWINGS: I1E81906 A,C,E

ITEM	FAILURE MODE	EFFECT	METHOD OF DETECTION	CORRECTIVE ACTION
C. Primary Waste Burner Provides for combustion of primary waste.	1. Burner gun pluggage. 2. Flame detector failure. 3. Ignitor failure. 4. Fuel/air delivery system failure.	Loss of secondary waste burner operation.	1. High pressure detected by PSH-225. 2. "Flame failure" local alarm.	Shut down system and repair.
D. Combustion Air Blower Provides combustion air to auxiliary fuel and primary waste burners.	1. Blower component failure. 2. PSL-1921 failure or blower pressure loss.	Loss of combustion air pressure will shut down all burners.	1. A motor failure or blower stoppage will result in a "burner fail" alarm on the BCP and the CCP. 2. A "low pressure" alarm will sound on the BCP.	Shut down and repair.
E. Aqueous Waste System Delivers aqueous waste to burner.	1. Pump component failure. 2. Strainer pluggage. 3. Line element failure.	Loss of flow will shut down aqueous burner.	1. Loss of motor "run" light on CCP. 2. DPSH-401 or 403 will sound if strainer begins to foul. 3. PSL-421 will note a loss in line pressure and shut down the burner.	1. Switch to spare pump and repair other. 2. Switch to spare strainer element and clean other. 3. Shut down system and repair.

SYSTEM: PRIMARY COMBUSTION
PAGE: 3 OF 5

APPLICABLE DRAWINGS: I1E81906 A,C,E

ITEM	FAILURE MODE	EFFECT	METHOD OF DETECTION	CORRECTIVE ACTION
F. Aqueous Waste Burner Provides for combustion of aqueous waste.	1. Burner gun pluggage.	Loss of aqueous waste burner operation.	1. High pressure detected by PSH-422.	Shut down system and repair.
G. Sludge Pump Delivers sludge to burner.	1. Pump component failure. 2. Loss-in-weight feeder failure.	Loss of sludge burner operation	1. Loss of pump "run" light on CCP. 2. High sludge flow alarm on CCP.	Shut down system and repair.
H. Sludge Burner Provides for combustion of sludge.	1. Burner gun pluggage. 2. Line element failure.	Loss of burner operation.		Shut down system and repair.
I. Burner Management System Provides all burner interlocks, fuel pressure control and flow measurement.	1. Flowmeter failure. 2. Pressure switch failure. 3. Regulator failure. 4. Strainer pluggage. 5. Motorized valve failure.	1. Shutdown of waste burner. 2-5. Shutdown of waste burner or all primary combustion burners.	1. "Low flow" alarm for waste on CCP. 2,3. Pressure alarm on the BCP. 4. Low flow or pressure alarm. 5. Burner inoperable.	1. Switch waste flowmeters through CCP and restart. 2,3,5. Shut down and repair. 4. Clean strainer and restart.

SYSTEM: PRIMARY COMBUSTION
PAGE: 4 OF 5

APPLICABLE DRAWINGS: I1E81906 A,C,E

ITEM	FAILURE MODE	EFFECT	METHOD OF DETECTION	CORRECTIVE ACTION
J. Surge Vent Provides an emergency means for hot flue gas to escape without damage to downstream equipment.	1. Limit switch failure. 2. Loss of electric supply. (Vent damper fails closed by counterweight)	1. Loss of surge vent alarm function.	1. "Open" alarm on CCP.	Restart system after repair.
K. Tertiary Air Damper Provides a means of adding excess air to the primary combustion chamber for solids combustion.	1. Loss of I/P. 2. Loss of electric/air supply.	Loss of damper function (fails open upon loss of air supply.)	No change in oxygen concentration or kiln temperature as damper control output is modified.	Restart system after repair.
L. Kiln Drive Provides rotary motion of kiln chamber at variable speed.	1. Hydraulic motor or pump component failure. 2. Hydraulic line failure. 3. Filter pluggage. 4. Oil cooler or heater failure. 5. Hydraulic fluid solenoid, temperature or pressure switch failure.	Kiln stoppage and resultant shutdown of primary combustion system.	Alarm SAL-910 would detect a kiln stoppage, and the local control panel would indicate some diagnostics.	Restart system after repair.

May 13, 1988

G-23

SYSTEM: PRIMARY COMBUSTION
PAGE: 5 OF 5

APPLICABLE DRAWINGS: I1E81906 A,C,E

ITEM	FAILURE MODE	EFFECT	METHOD OF DETECTION	CORRECTIVE ACTION
M. Ash Conveyor Provides a means of removing solid residues from the mixing chamber.	1. Conveyor drive component failure. 2. Drag chain failure.	Ash conveyor stoppage.	Alarm SAL-1050 would detect a conveyor stoppage.	Restart system after repair.
N. Ash Pit Water Provides water makeup to ash pit and removes accumulated suspended solids by a blowdown stream.	1. Pump component failure. 2. Strainer pluggage. 3. Line element failure. 4. Level control element failure.	Loss of water seal due to low level will shut down combustion system.	1. Loss of pump "run" light on the CCP. 4. Low and high level alarm LAL-1040 will be indicated on the CCP.	1,3,4. Shut down system and repair. 2. Switch to spare strainer element and clean other.
O. Combustion Process Controls Provides temperature and pressure control for combustion chamber.	1. Thermocouples failure. 2. Draft transmitter element failure.	1. Thermocouples fail high and shut off all combustion systems. 2. Draft transmitter elements would fail to high pressure and shut off all waste feed.	1. "High temperature" alarm on CCP. 2. "High pressure" alarm on CCP.	1. Switch to spare thermocouple element through CCP and restart. 2. Restart system after repair.

May 13, 1988

G-24

SYSTEM: SOLIDS HANDLING AND FEED
PAGE: 1 OF 3

APPLICABLE DRAWINGS: I1E81906C

ITEM	FAILURE MODE	EFFECT	METHOD OF DETECTION	CORRECTIVE ACTION
A. Drum Handling System Provides a means to dehead and dump the contents of steel drums before dropping the drum into the shredder.	1. Loss of nitrogen supply or F-400 compressor. 2. Mechanical component failure. 3. Roller conveyor failure. 4. Oxygen analyzer failure.	Loss of ability to process drums.	1. Inability to operate equipment. 2,3. Indicating lights on local panel. 4. Low oxygen content on local indicator. (sensor fails low).	1. Restart operation after restoration of nitrogen. 2-4. Shut down system and repair.
B. Shredder Provides a means to shred empty steel drums, wooden pallets and other solids.	1. Loss of nitrogen supply. 2. Oxygen analyzer failure. 3. Nitrogen solenoid failure or other inerting system failure. 4. Mechanical or electrical component failure.	Loss of ability to shred drums.	1-4. Inability to operate equipment. 3. High oxygen content on local indicator. (sensor fails low) 4. Indicating lights on local panel.	1. Restart operations after restoration of nitrogen supply. 2. Shut down shredder system and repair.

G-25

May 13, 1988

SYSTEM: SOLIDS HANDLING AND FEED
PAGE: 2 OF 3

APPLICABLE DRAWINGS: I1E81906C

ITEM	FAILURE MODE	EFFECT	METHOD OF DETECTION	CORRECTIVE ACTION
C. Shredded Solids Conveyor Provides a means of moving shredded solids from the storage hopper to the ram feeder.	1. Hydraulic system component failure. 2. Nitrogen inerting system failure. 3. Oxygen analyzer failure. 4. Mechanical or electrical component failure. 5. Weigh system failure.	Loss of ability to process shredded solids.	1. Loss of grapple function, low hydraulic pressure on local gauge. 2. "High oxygen" indicating light on local panel and in CCP. 3. Loss of weight indication.	
D. Bulk Solids Conveyor Provides a means of moving bulk solids from the storage hopper to the ram feeder. Solids are fed from the hopper to a transfer belt at a variable speed.	1. Belt tracking problem. 2. Belt drive system failure. 3. Bulk feeder failure.	Loss of ability to process bulk solids.	No weight change in weigh bin during cycle.	

SYSTEM: SOLIDS HANDLING AND FEED
PAGE: 3 OF 3

APPLICABLE DRAWINGS: I1E81906C

ITEM	FAILURE MODE	EFFECT	METHOD OF DETECTION	CORRECTIVE ACTION
E. Ram Feeder and Weigh Bin System Provides a means of adding a known weight of solids to the rotary kiln at varying intervals.	1. Hydraulic motor or pump component failure.	Inability to utilize ram for solids feed.	1-6. "Ram fault" alarm on CCP.	
	2. Hydraulic line failure.		2,3. Low hydraulic pressure on local gauges.	
	3. Filter pluggage.		1-5. Local indicating lights.	
	4. Oil cooler or heater failure.			
	5. Hydraulic fluid temperature or pressure switch failure.			
	6. Hydraulic cylinder, solenoid or limit switch failure.			
	7. Weigh system failure.		7. Loss of weight indication.	

APPENDIX H

Probability and Fault Tree for Accident Scenarios

Preface to Appendix H (p. H-1A)
(Prepared 11/87 and added 4/88)

H1 Scenario FP-5
Explosion in TSCA Shredder (p. H-2)

H2 Scenario RS-1
Release from Lift Truck Handling of Drums (p. H-7)

H3 Scenario I-6
Opening of Thermal Relief Stack (p. H-10)

Preface to Appendix H

The probabilities of occurrence of accident scenarios shown in Appendix H are estimated for one year of operation using constant failure rate data for system components. The probability of occurrence would be higher for the life of the project than for one year of operation. Failure rate data are based on normal operation after the start up phase is completed. For a chosen accident scenario, the probability of occurrence is likely to (1) be higher during the start up phase, (2) be nearly constant during much of the project life, and (3) increase as the facility nears the end of its useful life. The estimated recurrence interval for system failure (and the scenario) is based on the one year of operation and is used (in Appendix G) for comparison in the (DOE Order OR 5481.1B) Probability - Consequence Matrix (Appendix F). The probability associated with an accident scenario is related to and considered along with the consequence. Accident scenarios such as explosions in the shredder could occur. Preventive measures are used to lower the scenario probability. Mitigative measures are used to reduce the accident consequence. The material presented in this appendix provides information on selected accident scenario probabilities.

The following material provides some perspective on Scenario FP-5 (H.1) - Explosion in the Shredder. Explosion (failure) probabilities, accident preventive/mitigative measures, and shredder experience are discussed.

The probability of a system failure that could lead to an explosion (if a spark and flammable vapor were present) is estimated for Scenario FP-5a - Large Explosion in Shredded Product Enclosure as 0.009 per year using the 0.991 reliability and 114 year occurrence interval figures that are shown on page H-6a. During a 25 year project life the estimated failure probability, which becomes the explosion probability if certain conditions exist, increases to approximately 0.2 as estimated from the relationship $P = 1 - e^{-(0.009)(25)}$.

Measures taken to prevent explosions in the shredder and to mitigate their consequences include the following.

- Prevent flammable materials in the feed by using administrative procedures
- Prevent sparks in the shredder by using (1) a lower speed (27 rpm) shredder instead of a higher speed (200 rpm) unit and by using (2) spark resistant (a) electrical equipment and (b) shredder blades
- Prevent an explosive atmosphere from developing in the shredder by
  (a) providing a nitrogen inerting system and interlocks which shut down the shredder if N_2 is lost
  (b) providing an oxygen monitoring system (which includes monitoring of sample flow to the O_2 analyzers) and interlocks that shut down the shredder if the O_2 concentration exceeds 5%
- Mitigate consequences of a fire by providing a sprinkler system in the shredded products hopper and conveyor area.
- Mitigate consequences of an explosion by providing explosion (pressure) relief panels on the shredded product conveyor enclosure

Quantitative estimation of explosions in shredders is difficult; however, a review of experience with shredders in the commercial/municipal is useful in evaluating the explosion risk in the TSCA incinerator (K-1435) shredder. The report "Assessment of Explosion Hazards in Refuse Shredders", ERDA-76-71, prepared by the Factory Mutual Research Corp. in 1976, contains a survey of 95 explosions at 45 municipal solid waste shredding plants.

Municipal shredders are very different from the TSCA shredder, being much larger in size and throughput and using much more powerful hammer mills and grinders operating at considerably higher speed (200 rpm) than the shear-type TSCA shredder (27 rpm). Municipal shredders process a variety of materials whereas TSCA materials must conform to waste acceptance criteria. Visual inspection is used by both to minimize the possibility of feeding potential explosives. About 75% of the municipal refuse shredders that were surveyed experienced explosions of some type. The explosions were categorized in the 1976 ERDA report as negligible (no damage or downtime), minor, moderate, or major ($25,000 damage or over one

TSCA incinerator shredder. These measures are identified previously in this preface to Appendix H and include an inerting system, explosion vents, and fire protection. The recommended practice for shredder explosion protection (ASTM E-38, Proposal P156, Revision Draft E, 4/87) suggests using one or more methods; the TSCA shredder uses three methods. Other shredder designers could consider selecting one or more of these three methods and/or other methods such as an explosion suppression system, water spray system, or combustible gas detectors.

H1. Scenario FP-5

Probability of Explosion in the TSCA Shredder

The probability of an explosion in the TSCA shredder has been assessed based on a combination of system/equipment failure and human error. Two conditions are necessary for an explosion to occur: a sufficient fuel/air ratio and a spark. Since the operation of the shredder involves shredding metal, it is assumed that a spark will exist. Since the shredder will shred drums which contained volatile, flammable material, sufficient fuel for an explosion is assumed to be present. Control of the air or better stated oxygen/nitrogen will be essential to safe operation of the shredder.

Although this scenario assumes that sparks will exist in the operation of the shredder, some important facts which minimize sparks in the TSCA shredder are listed here.

- The shredder hammer speed is very slow (27 rpm). Explosion information was not available for shredder speeds this slow. The slowest speeds with available documented explosions were with speeds of 200 rpm or greater.
- The nitrogen blanket will minimize spark propagation.
- Wet nonflammable wastes are also processed.
- The number of shredder blades is small.
- Spark less shredder blade material is used.
- Spark less electrical components are used inside the shredder.

Volatile, flammable liquid wastes are drained at the drum dump station prior to drum shredding. This will minimize the quantity of volatile flammable waste introduced into the shredder.

Specific oxygen and nitrogen controls are designed to limit shredder operation to safe atmospheric conditions. Nitrogen flow and pressure is monitored and low flow is interlocked to shut down shredder operation. Two oxygen monitors are installed above the shredder blades and three oxygen monitors are installed in the shredder product hopper. Oxygen monitors are interlocked to shredder operation to inhibit or shut down operation if the oxygen reading indicates 5 percent or more oxygen. The sample gas flow to the oxygen monitors is also monitored and interlocked to inhibit or shut down shredder operation on loss of sample gas flow.

A fault tree leading to the top event "Explosion in the TSCA Shredder" is included herein. Probabilities of failures were obtained from the sources referenced in Table H1-1.

The calculations made to determine the probability of an explosion are included. Based on the assumptions made for TSCA operation, one can expect an explosion to occur in approximately 12 years.* Additional administrative measures are also taken to provide

* 15 to 114 years in supplemental material on pp H-6a, -6b, -6c.

further assurance that explosion potentials are minimized, but are not quantitatively evaluated here.

Table H1-1

Reliability Engineering Analysis—Explosion in TSCA Shredder

Element/Fault	Component Failure Rate	Quantity	Cumulative Failure Rate	Data * Source
0_2 monitor fails in low read position	$285x10^{-6}$ (fails low 1/2 time)	3 (series) 2 (parallel)	$427.5x10^{-6}$ $74.6x10^{-6}$	duPont 1980
0_2 sample flow is blocked	$683x10^{-6}$	5	$3415x10^{-6}$	Estimate
0_2 sample flow interlock fails	$1.24x10^{-6}$	1	$1.24x10^{-6}$	IEEE 500 pg 570
0_2 monitor reading low (nonhomogeneous mix)	$2x10^{-6}$	5	$10.0x10^{-6}$	Estimate
Loss of Plant N_2	$5.5x10^{-6}$	1	$5.5x10^{-6}$	duPont 1980
Loss of backup Nitrogen	$5.5x10^{-6}$	1	$5.5x10^{-6}$	duPont 1980
Loss of N_2 interlock	$1.24x10^{-6}$	1	$1.24x10^{-6}$	IEE 500 pg 570
0_2 monitor fails in in high read position	$285x10^{-6}$ (fail high 1/2 time)	3(series) 2(parallel)	$427.5x10^{-6}$ $74.6x10^{-6}$	duPont 1980
0_2 monitor reading high (nonhomogeneous mix)	$2x10^{-6}$	5	$10.0x10^{-6}$	Estimate
0_2 interlock fails	$1.24x10^{-6}$	1	1.24x10-6	IEEE 500 pg 570
Operator doesn't recognize fault in time to shutdown shredder	.01	1	.01	duPont 1981

calculation:

1-R O_2 sample flow is blocked and interlock fails $= \lambda_1 t * \lambda_2 t$

$$1\text{-}R = \frac{683 * 7300}{1{,}000{,}000} * \frac{1.24 * 7300}{1{,}000{,}000} = 4.99 * .01 = .05$$

$$1\text{-}R = .05$$

$$R = .95$$

$$\lambda = \frac{-\ln R}{7300} = 7.03 \times 10^{-6}$$

$$R = 2e^{-\lambda t} - e^{-2\lambda t}$$

$$R = 2e^{\frac{-142.5 \times 7300}{1{,}000{,}000}} - e^{-2\frac{142.5 * 7300}{1{,}000{,}000}}$$

$$2(.35) - .12$$

$$R = 70 - .12 = .58$$

$$\lambda' = \frac{-\ln R}{t} = -7.462 \times 10^{-5} \text{ or } 74.6 \times 10^{-6}$$

λ O_2 monitor fails in low read position $= \lambda_1 + \lambda_2 = 427.5 + 74.6 = 502.1 \times 10^{-6}$

λ O_2 monitor reading < 5% when actual O_2 content is > 5% $= 502.1 + 7.03 + 10.0 = 519.1 \times 10^{-6}$

Combined with operator error

$$1\text{-}R = \lambda_1 t * \lambda_2 t = \frac{519.1\ (7300)}{1{,}000{,}000} * .01 \text{ (2 demands)}$$ Estimate

$$1\text{-}R = 3.8 \times .02 = .08$$

$$R = .92 \qquad \lambda = \frac{-\ln R}{7300} = 11.4 \times 10^{-6}$$

calculation continued

May 13, 1988

$1-R_{\text{Loss of plant } N_2 \text{ and backup}} = (\lambda_1 t)^2 = \frac{5.5\,(7300)}{1{,}000{,}000}^{2} = .0016$

$R = .9984 \qquad \lambda = \frac{-\ln R}{7300} = 0.2 \times 10^{-6}$

Combined with loss of N_2 interlock

$1-R = \lambda_1 t * \lambda_2 t = \frac{0.2 * 7300}{1{,}000{,}000} * \frac{1.24 * 7300}{1{,}000{,}000}$

$= .0015 * .009 = 0.000014$

$R = .999986 \quad$ = negligible

λ 0_2 monitor reading >5%

$= \lambda$ negligible $+ 502.1 \times 10^{-6} + 10.0 \times 10^{-6}$

$= 512.1 \times 10^{-6}$

Combined with 0_2 interlock fails

$1-R = \lambda_1 t * \lambda_2 t = \frac{512.1 * 7300}{1{,}000{,}000} * \frac{1.24 * 7300}{1{,}000{,}000}$

$= 3.74 * .01 = .034$

$R = .966 \quad \lambda = \frac{-\ln R}{7300} = 4.7 * 10^{-6}$

Combined with operator error

$1-R = \lambda_1 t * \lambda_2 t = \frac{4.7\,(7300)}{1{,}000{,}000} * .01$ Estimate (2 demands)

$= .034 * .02 = .001$

$R = .999 \quad \lambda = \frac{-\ln R}{7300} = .1 \times 10^{-6}$

λ Explosion in TSCA shredder assuming volatile, flammable waste and sparks are present

$= 11.4 \times 10^{-6} + .1 \times 10^{-6} = 11.5 \times 10^{-6}$

$R = e^{-\lambda t} = .9195$

Estimated occurrence once every 12 years *

* 15 to 114 years in Supplemental material on pp H-6a, -6b, -6c.

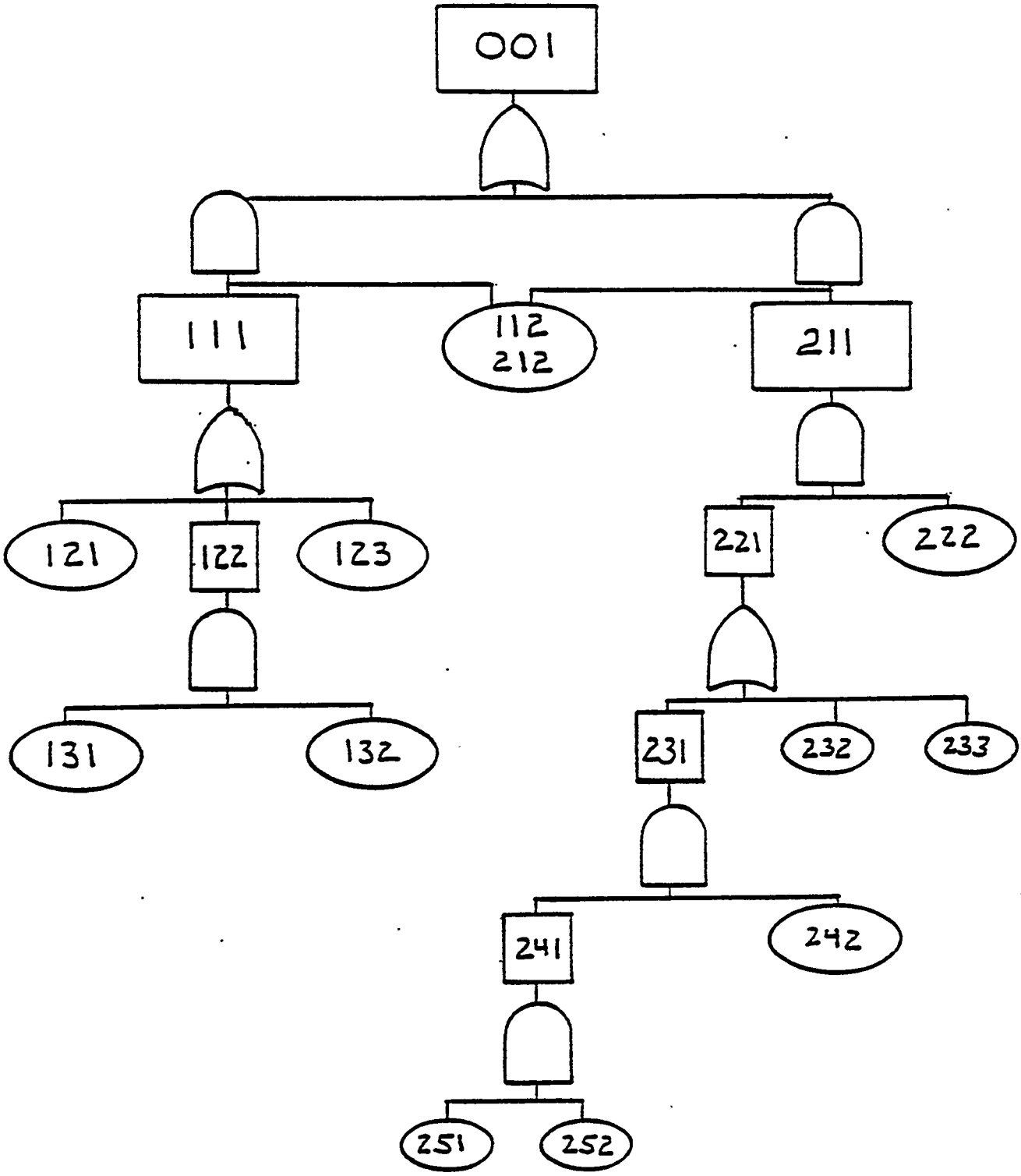

Fig. H1-1 Fault Tree for Scenario FP-5
Explosion in TSCA Shredder
(See legend on next page)

Legend for Fig. H1-1

Fault Tree for Scenario FP-5 Explosion in TSCA Shredder

Event*	Activity
001	Explosion in TSCA Shredder (also requires flammable waste and ignition source)
111	O_2 monitor reading is low when O_2 is high
112	Operator does not recognize fault
121	O_2 monitor fails in low read position
122	O_2 sample flow blocked and interlock falls
123	O_2 monitor too low because of non mixing
131	O_2 sample flow is blocked
132	O_2 sample flow interlock fails
211	O_2 monitor reads high and interlock fails
212	Operator does not recognize fault
221	O_2 monitor reading is high (more than 5%)
222	O_2 interlock fails
231	Loss of N_2 supply and N_2 interlock
232	O_2 monitor fails in high read position
233	O_2 monitor reads too high (non mixing)
241	Loss of Plant N_2 and backup
242	Loss of N_2 interlock
251	Loss of Plant N_2
252	Loss of backup N_2

*Event: a b c
a = branch
b = level
c = number

May 13, 1988

H-6a

COMPLIANCE WITH TSCA

FP-5a LARGE EXPLOSION IN SHREDDED PRODUCTS ENCLOSURE

ELEMENT	CUMULATIVE FAILURE RATE
O_2 MONITOR FAILS LOW (3 PARALLEL)	43.5×10^{-6}
(SAME AS IN CASE 5c)	10.0×10^{-6}
(SAME AS IN CASE 5c)	7.03×10^{-6}

$$\lambda_T = 43.5 + 10.0 + 7.03 = 60.53 \times 10^{-6}$$

$$1 - R = \frac{60.53\ (7300)}{1{,}000{,}000} \times 0.02 = 0.008837$$

$$R = 0.99116$$

$$\lambda = \frac{-\ln R}{7300} = 1.2 \times 10^{-6}$$

RATE OF OCCURANCE = 114 YEARS

COMPLIANCE WITH TSCA

FP-5b

SMALL EXPLOSION IN SHREDDED PRODUCTS ENCLOSURE

ELEMENT	CUMULATIVE FAILURE RATE
O_2 MONITOR FAILS LOW (3 SERIES)	427.5×10^{-6}
(SAME AS IN CASE 5c)	10.0×10^{-6}
(SAME AS IN CASE 5c)	7.03×10^{-6}

$$\lambda_T = 427.5 + 10.0 + 7.03 = 444.5 \times 10^{-6}$$

$$1 - R = \frac{444.5\ (7300)}{1{,}000{,}000} \times 0.02$$

$$1 - R = 0.065$$

$$R = 0.935$$

$$\lambda = \frac{-\ln R}{7300} = 9.2 \times 10^{-6}$$

RATE OF OCCURANCE = 14.9 YEARS

* THE ABOVE CALCULATIONS MAKE ASSUMPTION THAT EXPLOSIVE VAPOR AND SPARK ARE PRESENT IN THE SAME LOCATION AS POCKET OF O_2 RICH GAS. IN OUR OPINION, THIS ASSUMPTION IS VERY CONSERVATIVE.

** PER J. H. CLINTON'S CALCULATIONS DATE JUNE 16, 1987, 14 CU FT OF 21% O_2 GAS IN A N-OCTANE VAPOR RICH ENVIRONMENT, IF IGNITED, WOULD DEVELOP A 2 PSI PRESSURE SURGE.

H-6c

May 13, 1988

COMPLIANCE WITH TSCA

FP-5c

EXPLOSION IN SHREDDER HOUSING

ELEMENT	CUMULATIVE FAILURE RATE
O_2 MONITORS FAILS LOW (2 PARALLEL)	74.6×10^{-6}
O_2 MONITORS READ LOW (NONHOMOGENEOUS MIX)	10.0×10^{-6}
O_2 SAMPLE FLOW BLOCKED	7.03×10^{-6}

$$\lambda_T = \lambda_{T1} + \lambda_{T2} + \lambda_{T3} = 74.6 + 7.03 + 10.0$$

$$\lambda_T = 91.63 \times 10^{-6}$$

$$1 - R = \lambda_T (7300)(0.02)$$

$$1 - R = 0.0134$$

$$R = 0.9866$$

$$\lambda = \frac{-\ln R}{7300} = 1.85 \times 10^{-6}$$

RATE OF OCCURANCE = 74 YEARS

H2. Scenario RS-1

Probability of a Toxic Material Release from Lift Truck Handling of Drums

Two types of lift trucks are used in the drum unloading and storage areas. A forklift truck is used to unload the drum transport truck. Four drums are secured to each pallet. Drum through put is six drums/hour therefore the forklift truck will make 12 lifts/day for an 8 hour shift day. With an operating schedule of 305 working days/year, the forklift will make 3600 lifts/year in unloading the drum transport truck.

A clamp lift truck is used to transport individual drums to the drum handling station. The clamp lift truck will make 14,640 lifts/year.

the accident scenario under study would result in a chemical spill, possible toxic substance inhalation, and/or possible asphyxiation. This quantitative evaluation breaks the accident down into failure modes which could lead to the incident.

The failure modes causing toxic material release from lift truck handling of drums is shown in figure H2-1.

May 13, 1988

Calculation:

Operator Error causes release	$= 500 \times 10^{-6} * .50 * .75 * .9$
	$= 168.8 \times 10^{-6}$
Toxic Material release from lift truck handling drums	$= 22 + 168.8 + 23.8 = 214.5 \times 10^{-6}$

A toxic material release from lift trucks handling drums will occur approximately 1 1/2 time per year. Spill prevention controls however, such as dikes and extensive training are in place for the drum station operation.

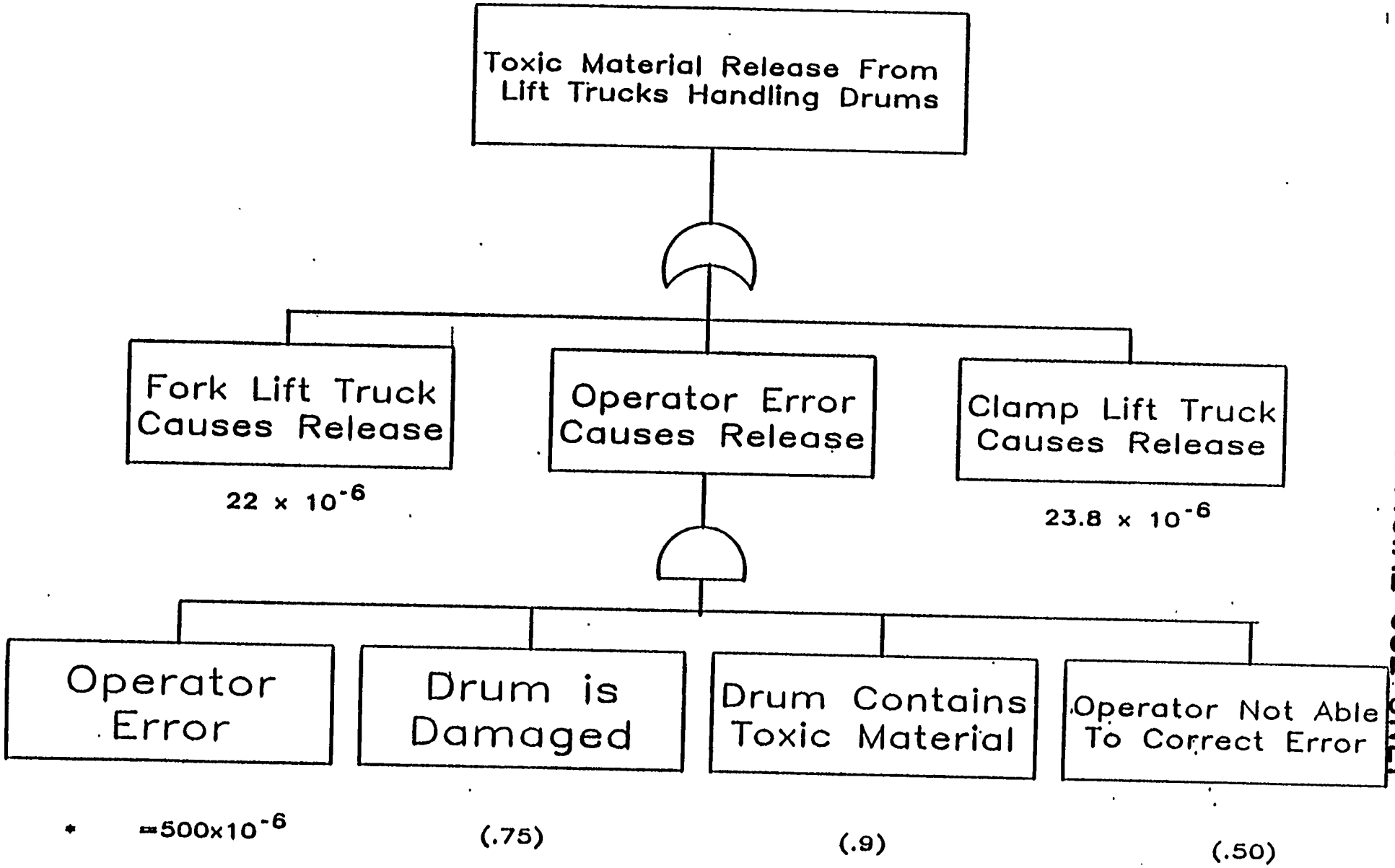

* Estimated probability of errors of commission in operating manual controls. Reference Table 20-12 Item (4) NUREG/CR-1278

Fig. H2-1 Fault Tree for Scenario RS-1

Figure 2

H3. Scenario I-6

Probability of Opening Thermal Relief Stack

I. SUMMARY

The opening of the thermal relief stack will be allowed by the occurrence of the following events:

Event No.	Event Description
1.	Loss of Induced Draft Fan
2.	High Quench Temperature
3.	Loss of Quench Water
4.	Loss of Electrical System
5.	Loss of Vent Closure Device
6.	Loss of PLC System
7.	Failure of IWS to Cut Off
8.	Failure of Emergency Cut Off Switch

A Fault Tree Analysis was conducted for these events. The frequency of occurrence of each of the events was then calculated from the failure frequency of lower level components. The component failure frequencies were obtained from established national standards, government technical reports and military hand books. The references used in this reliability analysis are listed below. (See Table H3-1, Fig. H3-1 and individual fault trees)

Reference No.	Document No.	Document Title 1
1	MIL-HDBK-217	Military Standarization Handbook Reliability Prediction of Electronic Equipment
2	IEEE Std. 500 1984	IEEE Guide to the Collection and Presentation of Electrical, Electronic, Sensing Component, and Mechanical Equipment Reliability Data for Nuclear-Power Generating Stations.
3	NPRD-1	Nonelectronic Parts Reliability Data, Reliability Analysis Center, 1978

4	DPST-CFRP -80-113	Component Failure-Rate Data with Potential Applicability to the Hot Experimental Facility; duPont, Savannah River Laboratory, 1980

It is anticipated with the redesigned system, that one of the studied events will cause the thermal relief stack to open on the average every 4.5 years.

A summary of the reliability data and vent opening frequency information is provided herein. The failure rates and reliability calculations are for mature plant operation. The test program for the facility should minimize start-up failures prior to introducing hazardous feed materials.

TABLE H3-1

EVENTS WHICH CAUSE RELIEF VENT TO OPEN

EVENT	PROBABILITY OF OCCURRANCE/10^6
1. LOSS OF ID FAN	4.6
2. HIGH QUENCH TEMP.	0.7
3. LOSS OF QUENCH WATER	0.6[a]
4. LOSS OF ELECTRICAL	3.6
5. LOSS OF VENT CLOSURE DEVICE	1.7[b]
6. LOSS OF PLC SYSTEM	19.0[c]
7. IWS FAILS TO CUT OFF	0.2
8. EMERGENCY CUT OFF SWITCH	0.15
	= 4.5 YRS/OCCURRANCE

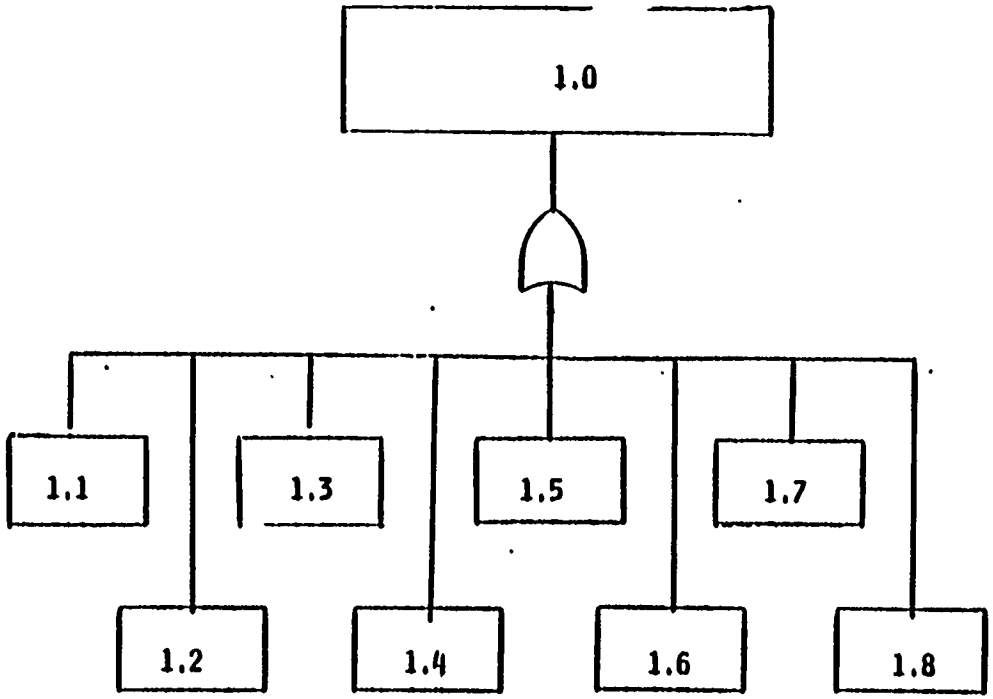

Fig H.3-1 Fault Tree for Scenario I-6

1.0 OPENING OF THE THERMAL RELIEF STACK

1. LOSS OF ID FAN
2. HIGH QUENCH TEMP.
3. LOSS OF QUENCH WATER
4. LOSS OF ELECTRICAL
5. LOSS OF VENT CLOSURE DEVICE
6. LOSS OF PLC SYSTEM
7. IWS FAILS TO CUT OFF
8. EMERGENCY CUT OFF SWITCH

1. INDUCED DRAFT FAN

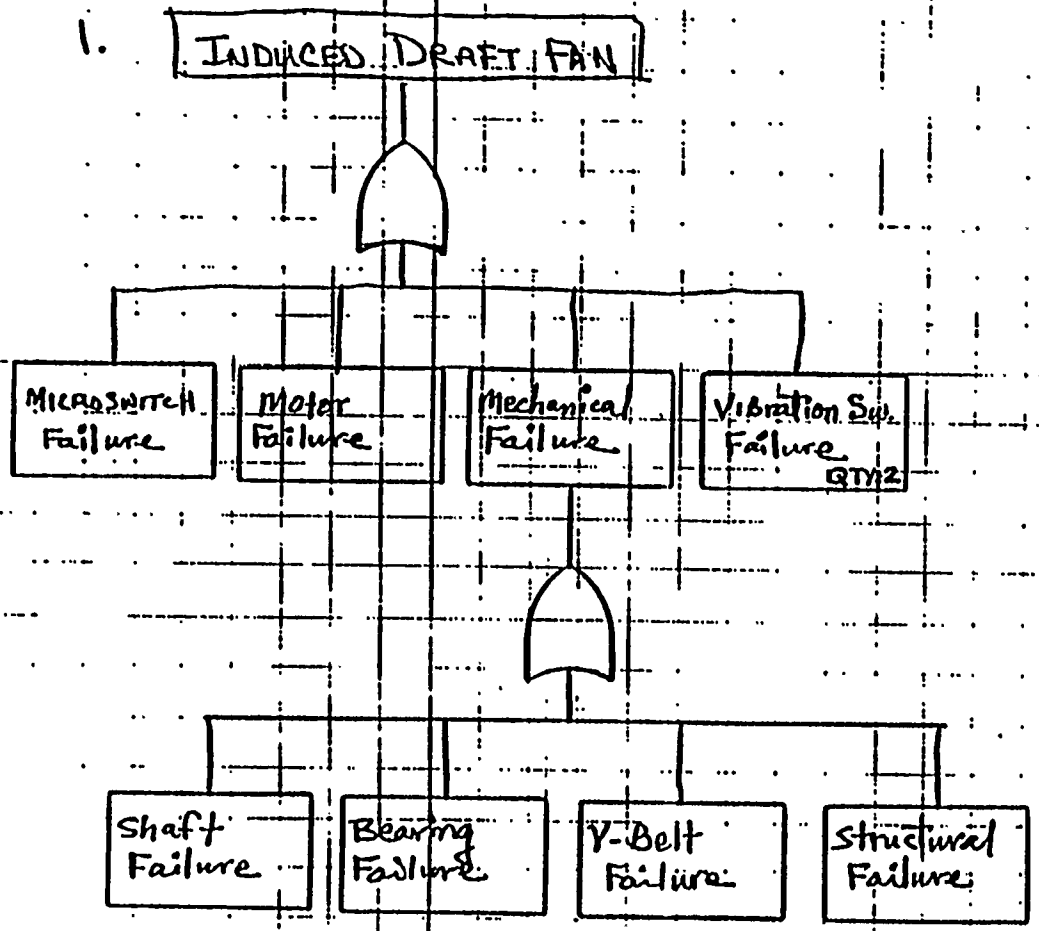

COMPONENT	FAILURE RATE (10^{-6} HR)	SOURCE OF DATA
MICROSWITCH	1.56	DPST-CFRP-80-1 du Pont pg 27 Switch-micro
MOTOR (125 HP)	1.09	IEEE 500, 198
SHAFT	.20	CPST-CFRP-80-1 du Pont pg 25 Heavy Stress
BEARING	1.15	NPRD-1, pg 2 GRF Envir.
V-BELT	3.88	CPST-CFRP-80-1 du Pont pg 11 Belts, Drive
STRUCTURAL	.33	ESTIMATED
VIBRATION (.41) SWITCH (QTY=2)	.82	IEEE 500, 198 Pg 603
	9.03	

INCIPIENT FAILURE ARE MITIGATED BY VIBRATION MONITOR THEREFORE REDUCE ALL MODES FAILURE RATE BY 50%

TOTAL FAILURE RATE = 4.5×10^{-6}

UCN-4032A (15 9-80)

SHEET of
DATE
CHECKED BY
COMPUTED
ESD NO.
JOB

2.

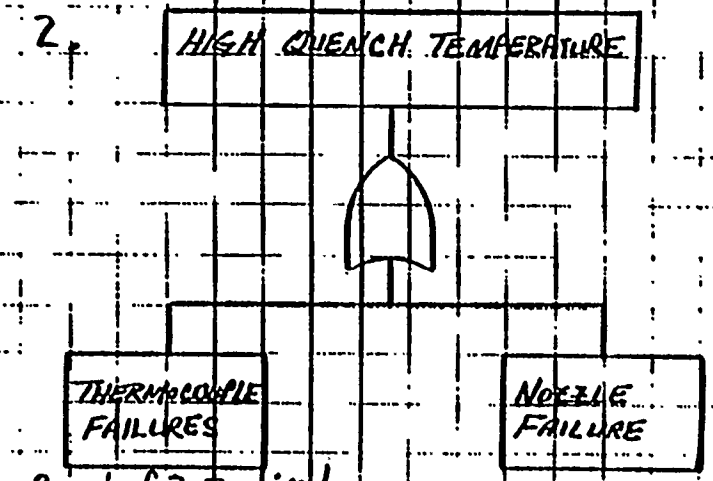

2 out of 3 Required for success

COMPONENT	FAILURE RATE (10^{-6} HR)	SOURCE OF DATA
THERMOCOUPLES 2 out of 3	.12	CALCULATION *
NOZZLE STRUCTURAL FAILURE	.62	NPRD-1 pg 87 SPRINKLER HEAD
TOTAL FAILURE RATE =	.74	

* MILITARY STANDARD 217C FORMULA FOR 2 OUT of 3 REQUIRED FOR SUCCESS $R_{2/3} = 3e^{-2\lambda t} - 2e^{-3\lambda t}$, and FAILURE RATE $= -\ln(R_{sys})/7300$

THERMOCOUPLE	2.413	NPRD-1 pg 105 GRF, MILITARY

May 13, 1988

UCN-4032A

OFFICIAL USE ONLY

H-15

3.

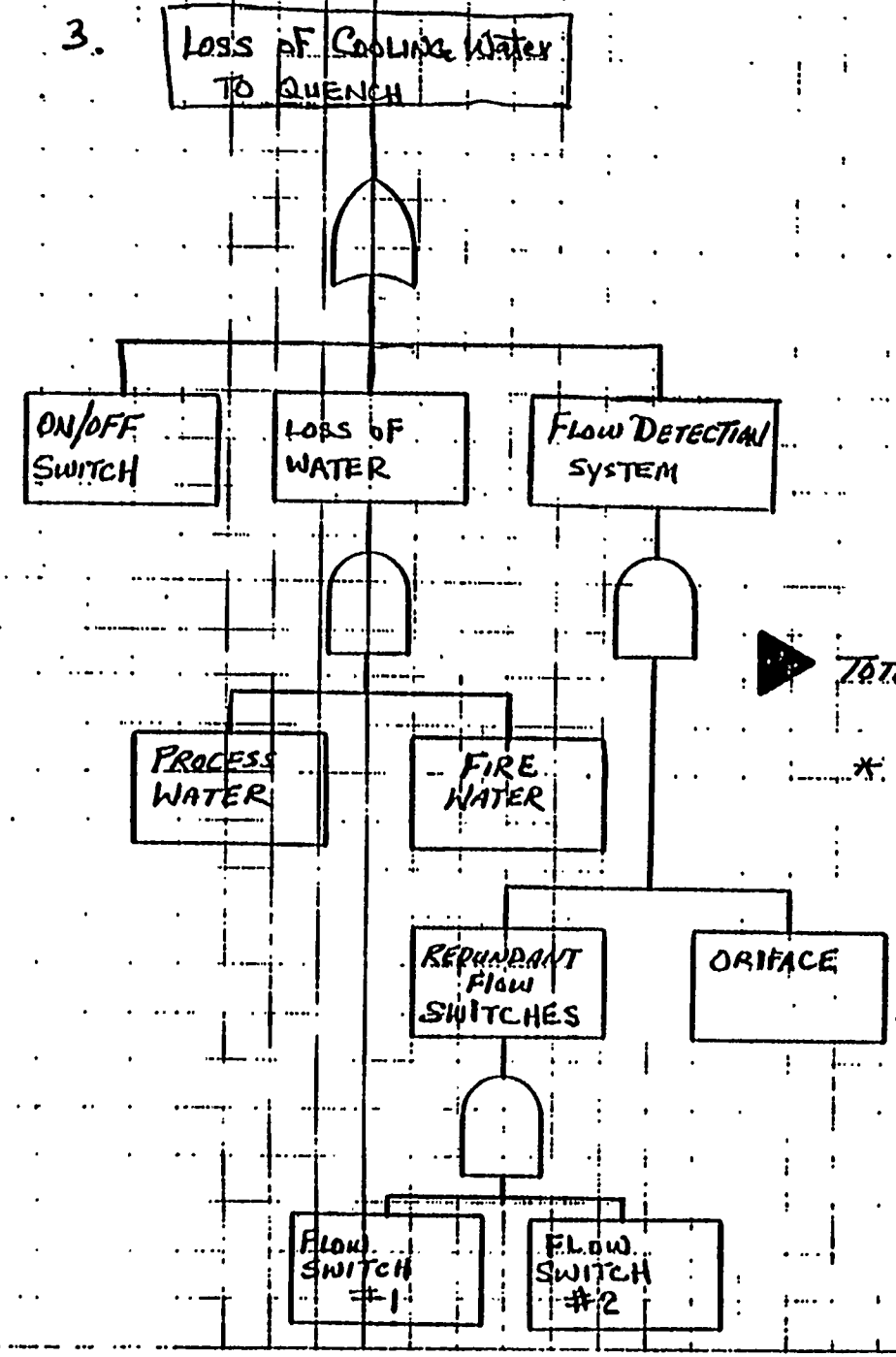

COMPONENT	FAILURE RATE (10^{-6} HR)	SOURCE OF DATA
ON/OFF SWITCH ELECTRIC	.58	IEEE 500, 1984 pg 684
FLOW DETECTION SYSTEM	.004	CALCULATION *
PROCESS AND FIRE WATER	.01	CALCULATION *
TOTAL FAILURE RATE =	.6	

* PROCESS WATER AND FIRE WATER EACH WAS ASSUMED TO HAVE A 99% RELIABILITY OR FAILURE RATE = 1.4×10^{-6}. WITH "AND" GATE LOGIC $(1-R_{SYS}) = (1-R_1)\times(1-R_2)$ and FAILURE RATE = $-\ln(R_{SYS})/7300 = .01 \times 10^{-6}$

ORIFACE	3.94	IEEE 500, 1984 pg 582
FLOW SWITCH	4.5	IEEE 500, 1984 pg 581
REDUNDANT FLOW SWITCHES	.14	CALCULATION

UCN-4032A (15 9-80)

5.

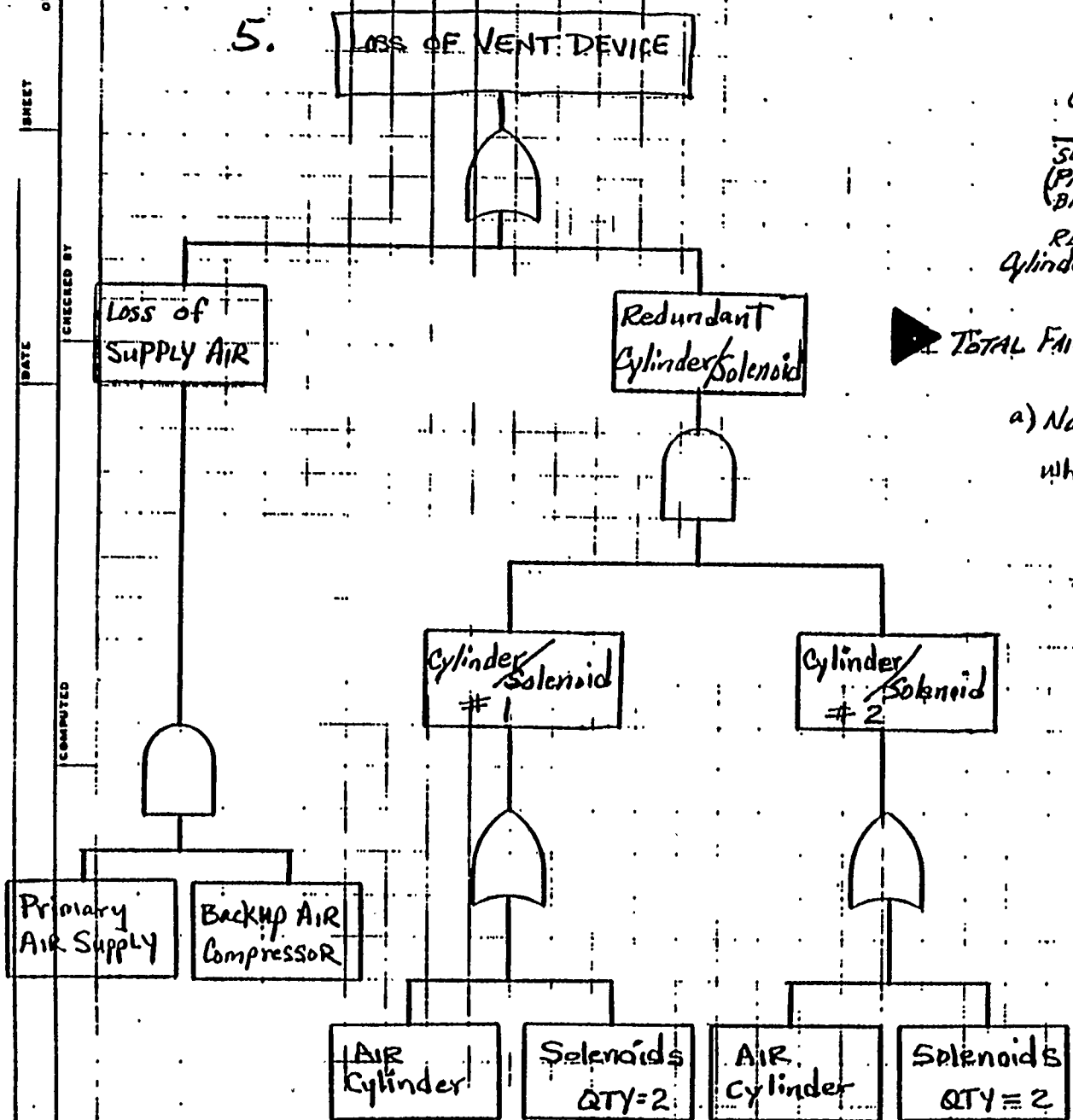

COMPONENT	FAILURE RATE (10^{-6} HR)	SOURCE OF DATA
SUPPLY AIR (PRIMARY & BACK-UP)	.23	CALCULATION*
REDUNDANT Cylinder/Solenoid	1.46	CALCULATION*

TOTAL FAILURE RATE = 1.7 [a]

a) No credit is taken for vibration monitors which would minimize incipient failure

*WITH "AND" GATE LOGIC
$(1-R_{sys}) = (1-R_1) \times (1-R_2)$ and
FAILURE RATE $= -\ln(R_{sys})/7300$

AIR CYLINDER (125 psi)	12.25	IEEE 500, 1984 pg 825
SOLENOID VALVE ELECTRIC NORMALLY CLOSED	1.32	IEEE 500, 1984 pg 450
PRIMARY AIR SUPPLY	5.5	DPST-CFRP-80-113 duPont pg 10
BACK-UP AIR COMPRESSOR	5.96	DPST-CFRP-80-113 duPont pg 14

UCN-4032A (15. 9-80).

OFFICIAL USE ONLY

H-17

6.

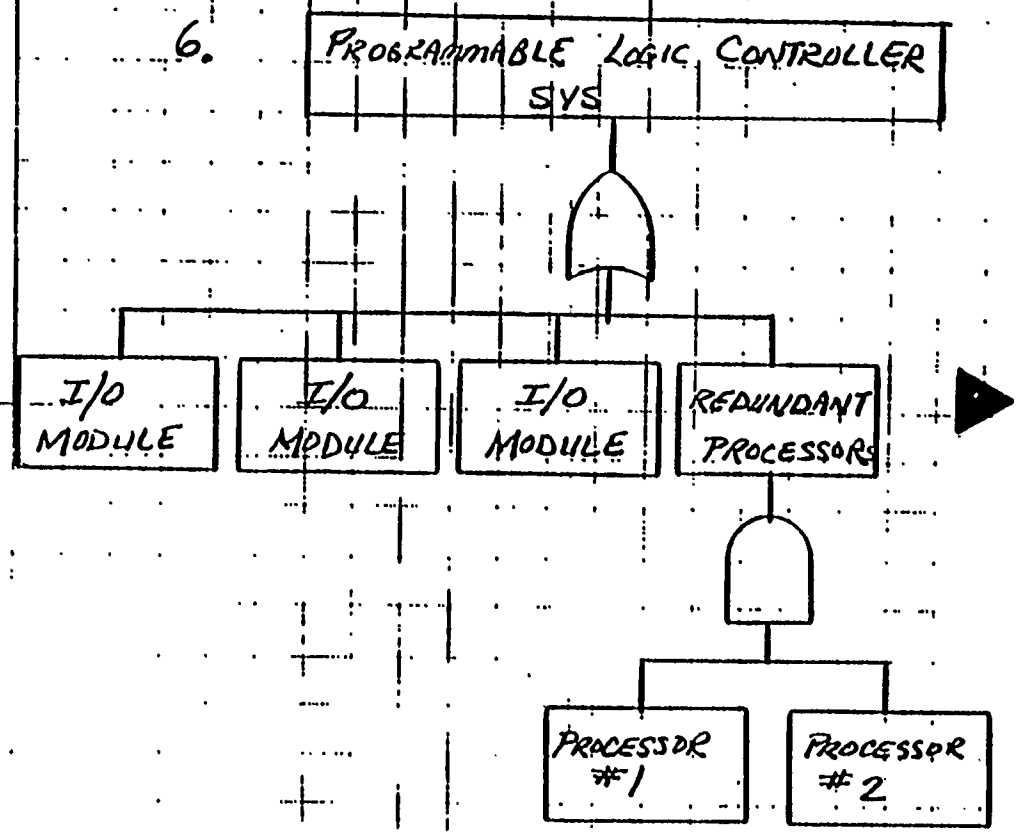

COMPONENT	FAILURE RATE (10^{-6} HR)	SOURCE OF DATA
PLC (REDUNDANT) MODICON 884	7.4	CALCULATION*
INPUT/OUTPUT MODULE (QTY=3)	11.55	CALCULATION*
TOTAL FAILURE RATE = 19.0		
PROCESSOR	35.71	GOULD ESTIMATE
I/O MODULE	3.85	GOULD ESTIMATE

* WITH "AND" GATE LOGIC

$$(1-R_{sys}) = (1-R_1) \times (1-R_2)$$

WITH "OR" GATE LOGIC

$$R_{sys} = R_1 \times R_2$$

UCN-4032A

OFFICIAL USE ONLY

APPENDIX I

PROCESS AND INSTRUMENT DIAGRAM (PI&D) DRAWINGS(*)

Included with FSAR

I1E-81906A	Primary Liquid & Aqueous Waste Feed
I1E-81906B	Secondary Liquid Waste Feed, Direct Burn & Sludge Systems
I1E-81906C	Solids Feed System
I1E-81906D	Primary Combustion Chamber
I1E-81906E	Secondary Combustion Chamber, Mixing Chamber, & Ash Handling
I1E-81906F	Gas Quench & Cleaning System
I1E-81906G	Utilities

Listed for Reference

I1E-81907F	Receiving & Sorting, Unloading Stations, & Pumps
I1E-81907G	Concentrated, dilute & Aqueous PCB Waste Receiving Tanks
I1E-81907H	Fuel Oil & PCB Storage Tanks
I1E-81907J	Primary, Secondary & Aqueous Waste Receiving Tanks
I1E-81907K	Primary & Secondary Waste Storage Tanks
I1E-81907L	Secondary Liquid Waste Feed Tanks
I1E-81907M	Primary Liquid Waste Feed Tanks
I1E-81907N	Aqueous Liquid Waste Feed Tanks
I1E-81907P	Grinder Pumps
I1E-81907Q	Ash Water & Purge Water Tanks
I1E-81907R	Fire Water Collection, Surge Tanks
I1E-81907S	Steam, Condensate, Sanitary Water, Process Water, Nitrogen & Pump Seals
I1E-81907T	Waste Oil, Pump Controls, Contaminated Sanitary Sewage, Cleaning Station, Plant Air, & Natural Gas
I1E-81907U	Carbon Absorber Treatment

Layout Graphics listed for Reference

I1E-81906-GL01	Control Panel Layout Graphics
I1E-81906-GL02	Control Panel Layout Graphics
I1E-81906-GL03	Control Panel Layout Graphics
I1E-81906-GL04	Control Panel Layout Graphics

*As-built drawings available 5/88

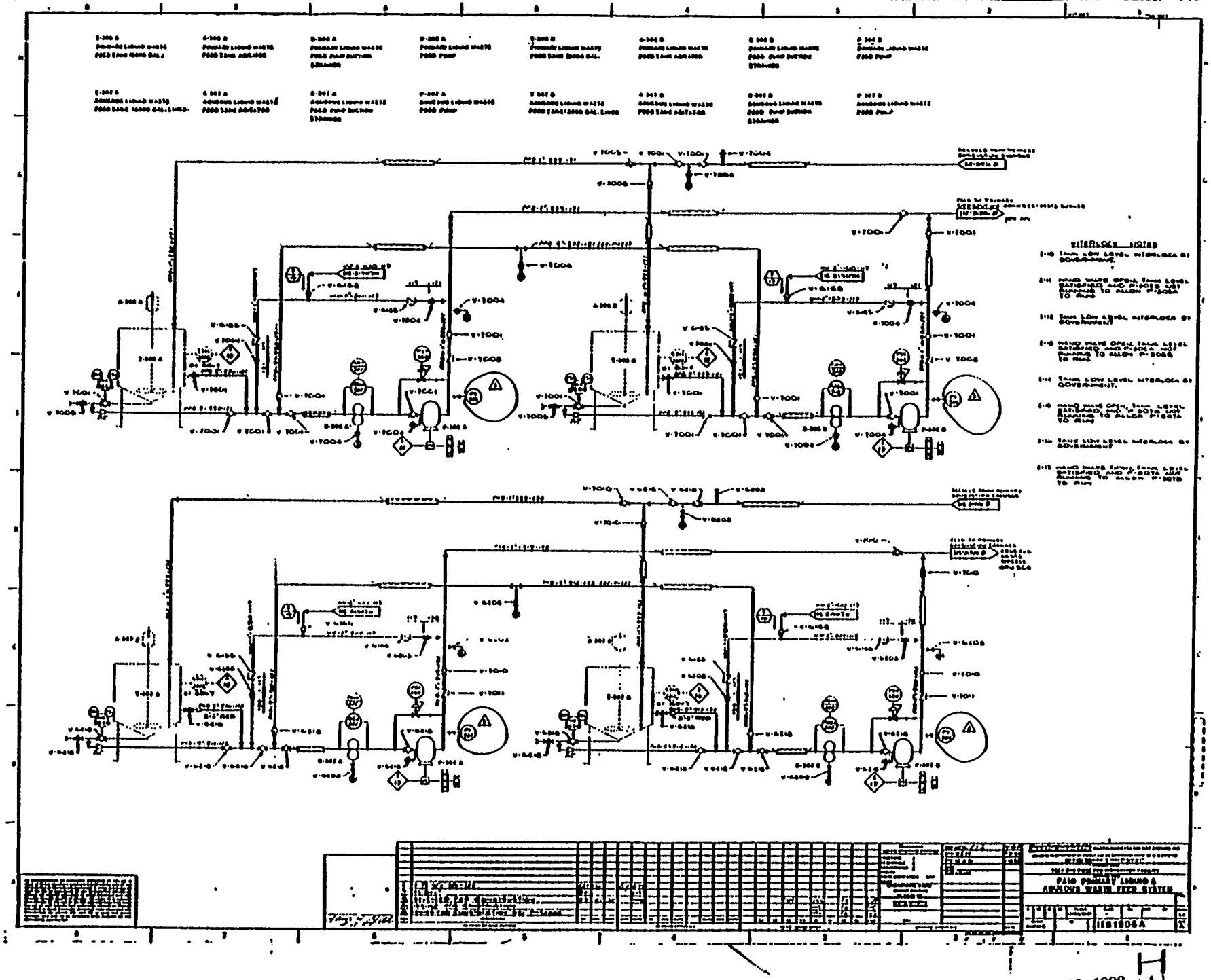

May 13, 1988

H-2

OFFICIAL USE ONLY

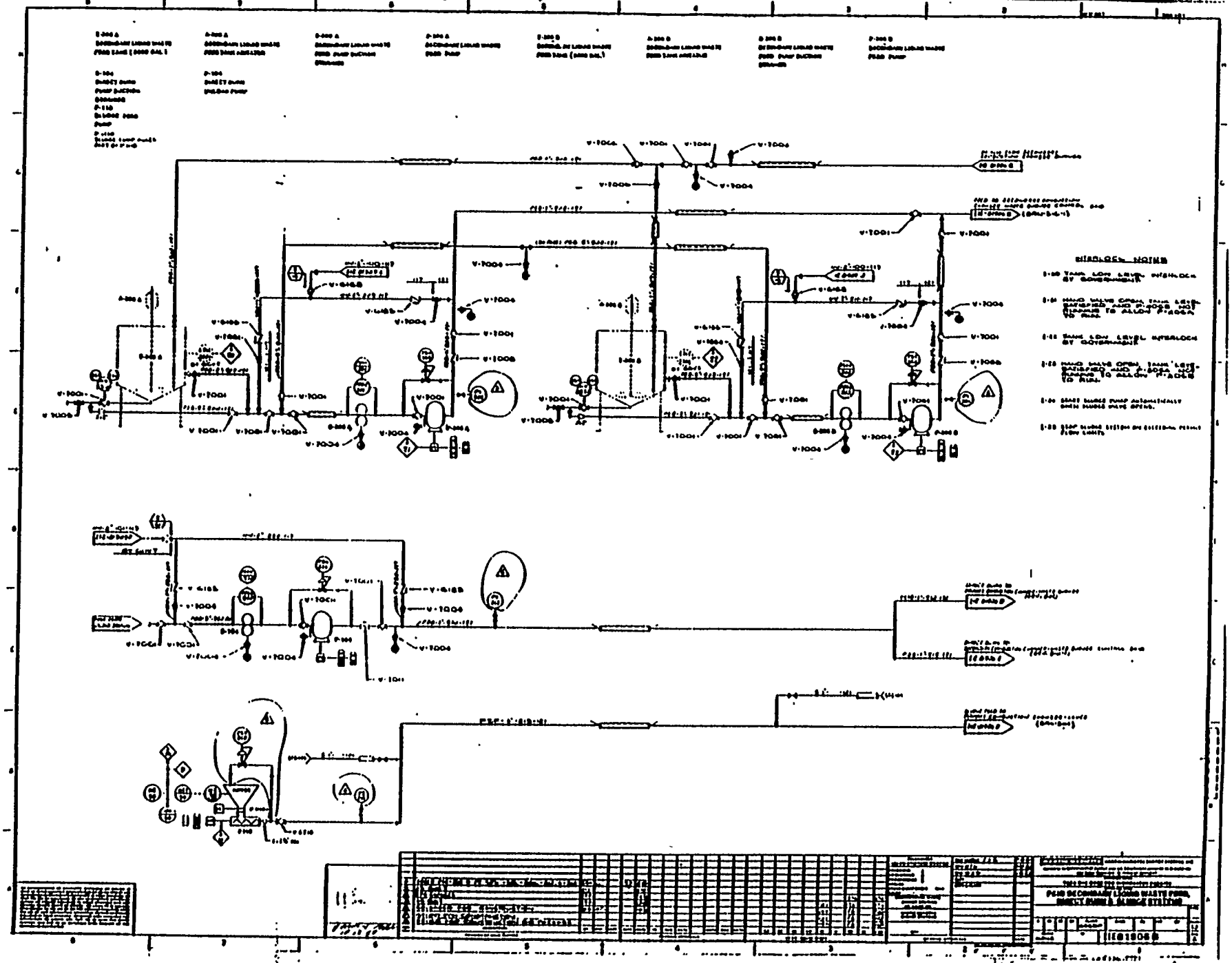

May 13, 1988

H-3

OFFICIAL USE ONLY

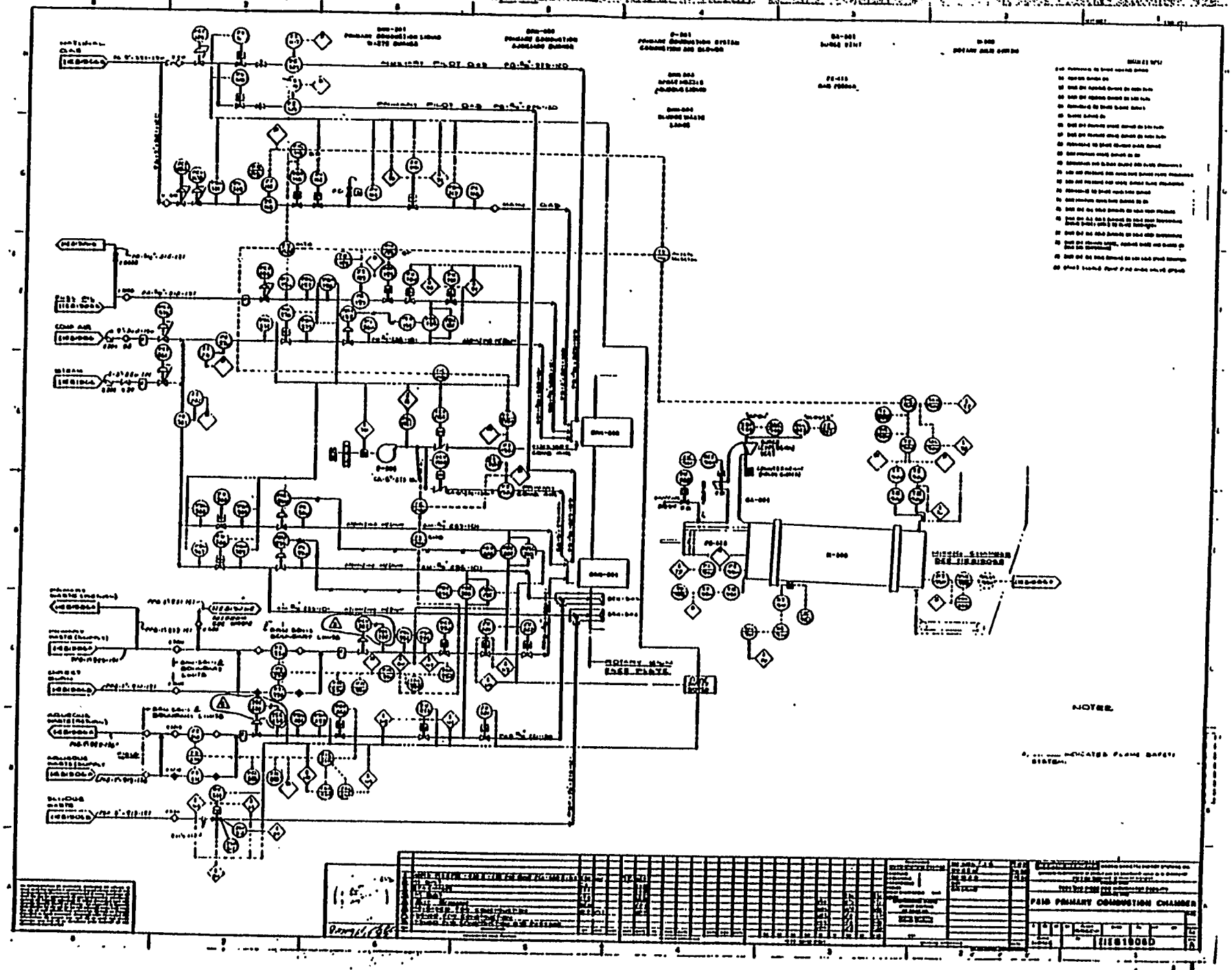

OFFICIAL USE ONLY

May 13, 1988

H-5

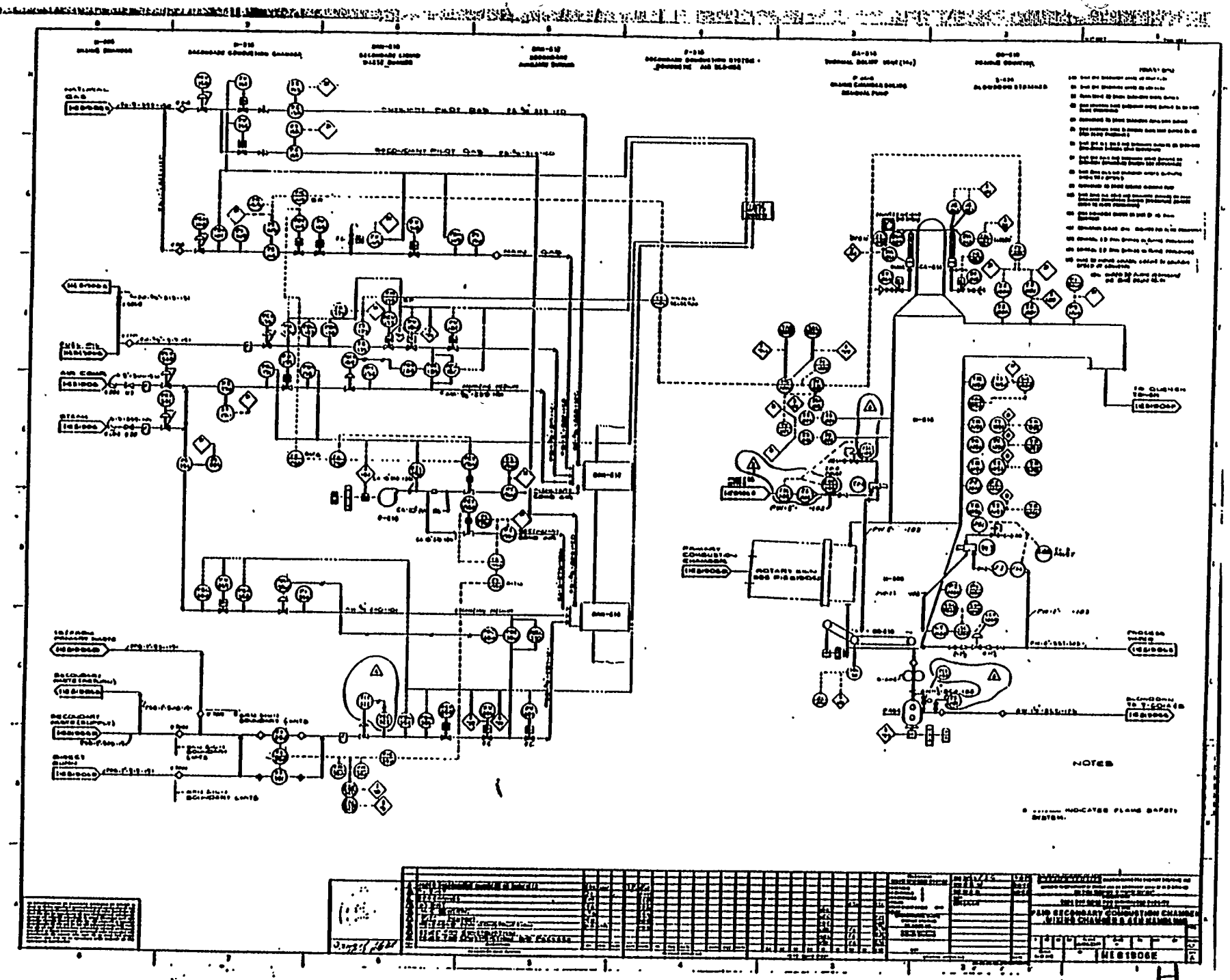

May 13, 1988

OFFICIAL USE ONLY

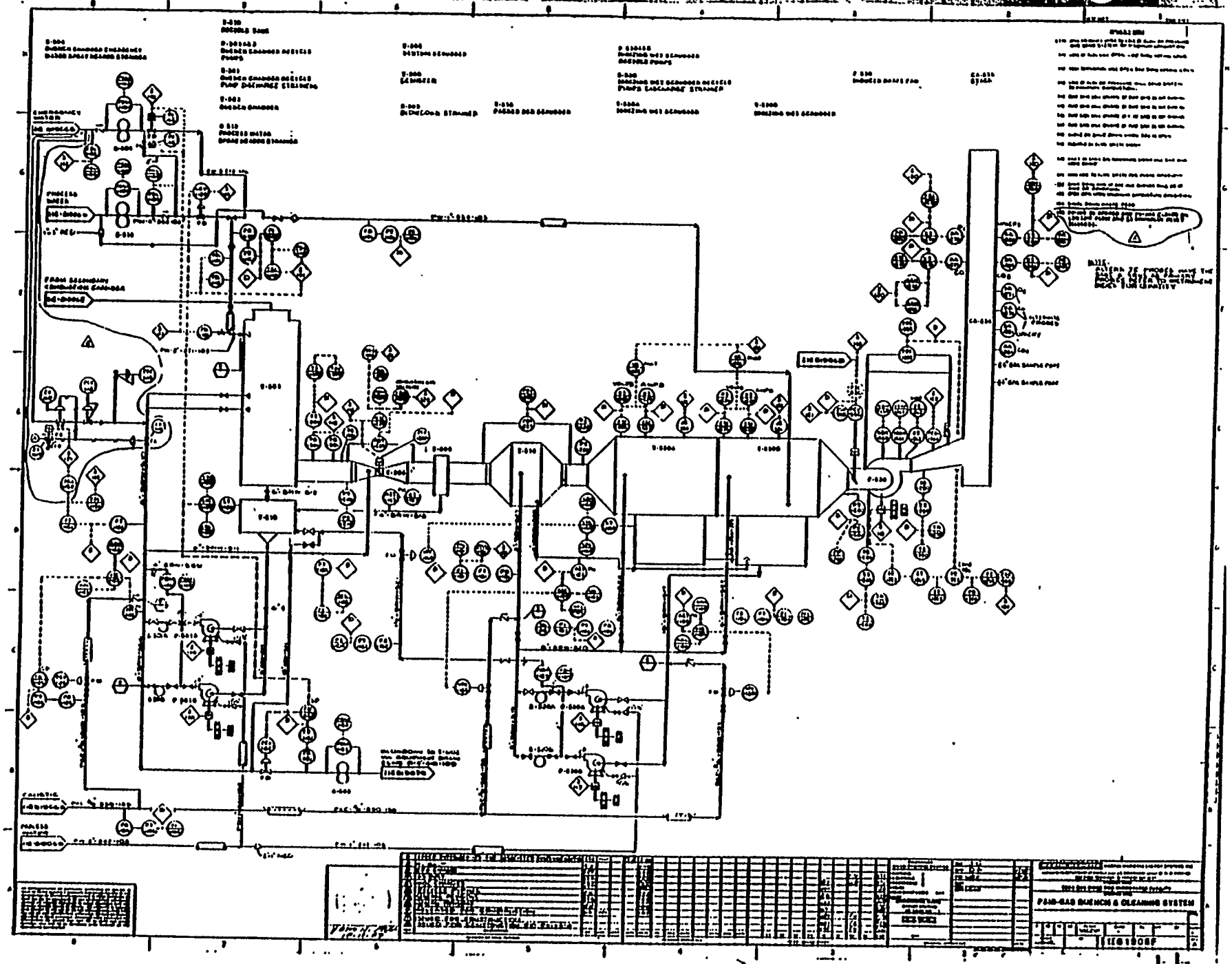

May 13, 1988

OFFICIAL USE ONLY

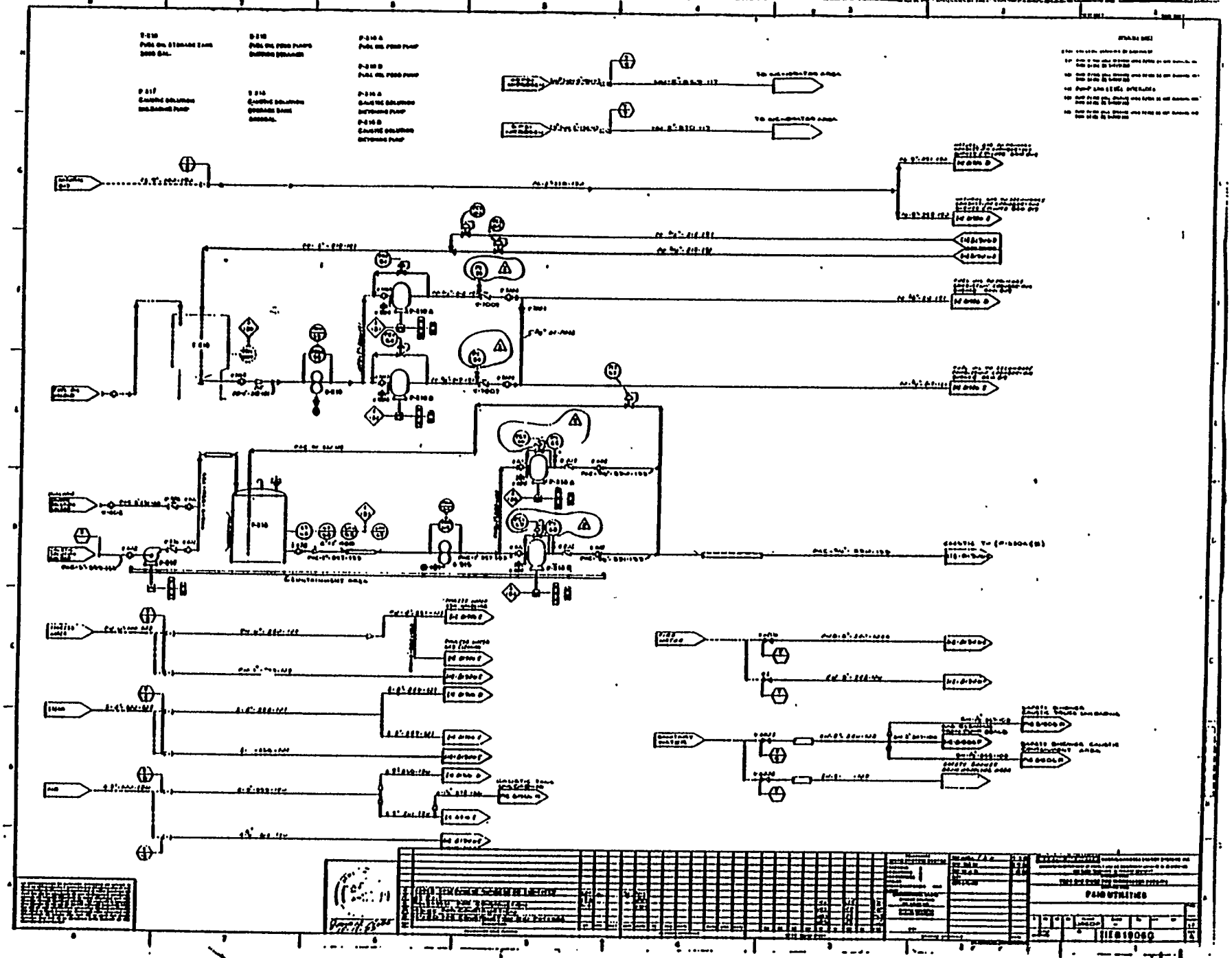

May 13, 1988

OFFICIAL USE ONLY

May 13, 1988

I-9

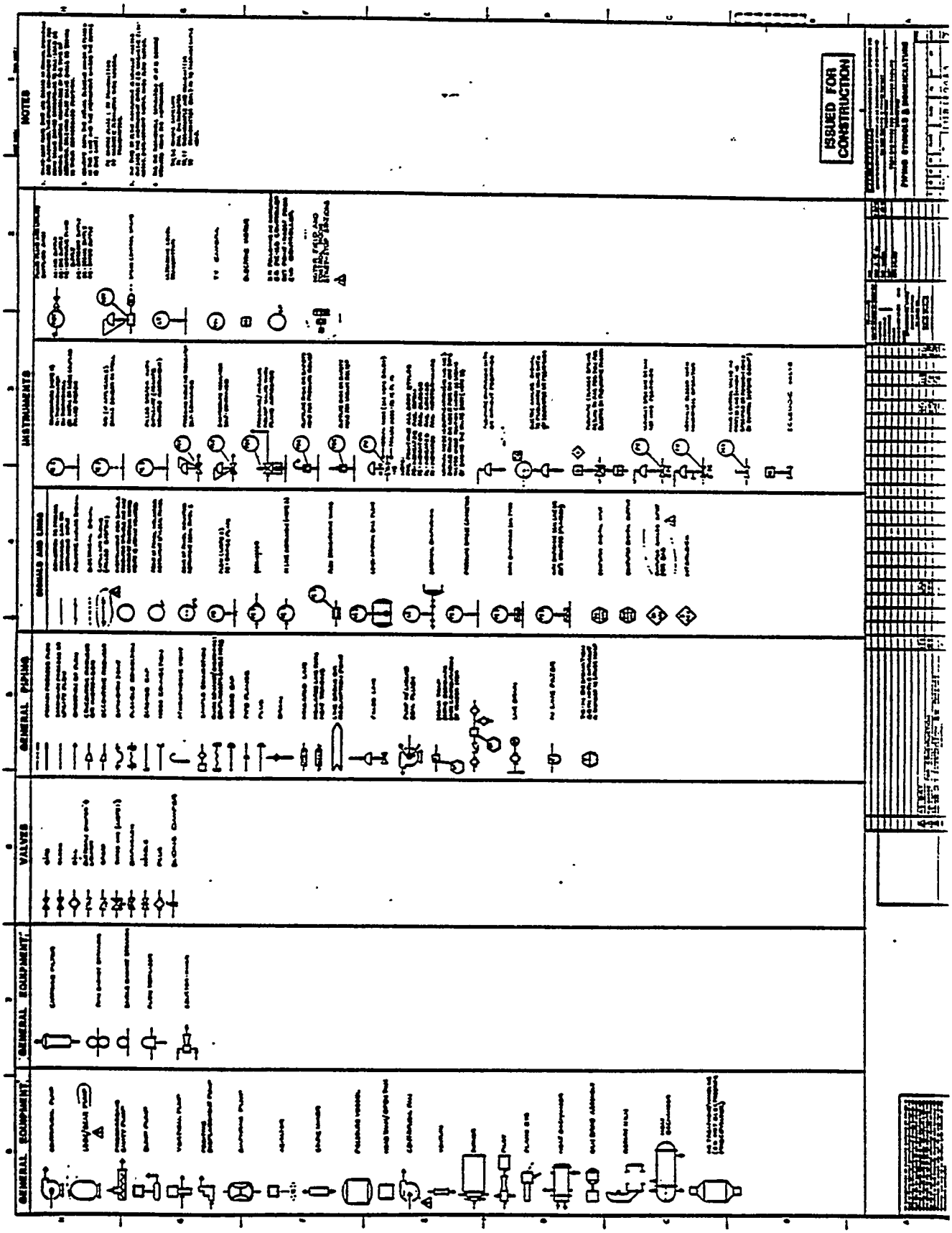

APPENDIX J

Control Logic Flow Sheets(*)

I1E-81906-L00	Symbol Sheet
-L01	Incinerator TRV
-L02	Incinerator Combustion
-L03	Incineration Waste Feed
-L04	Solids Feed
-L05	Grapple
-L06	Ram Cycle
-L10	Incinerator Control Instrument Summary

*As-built drawings available 5/88

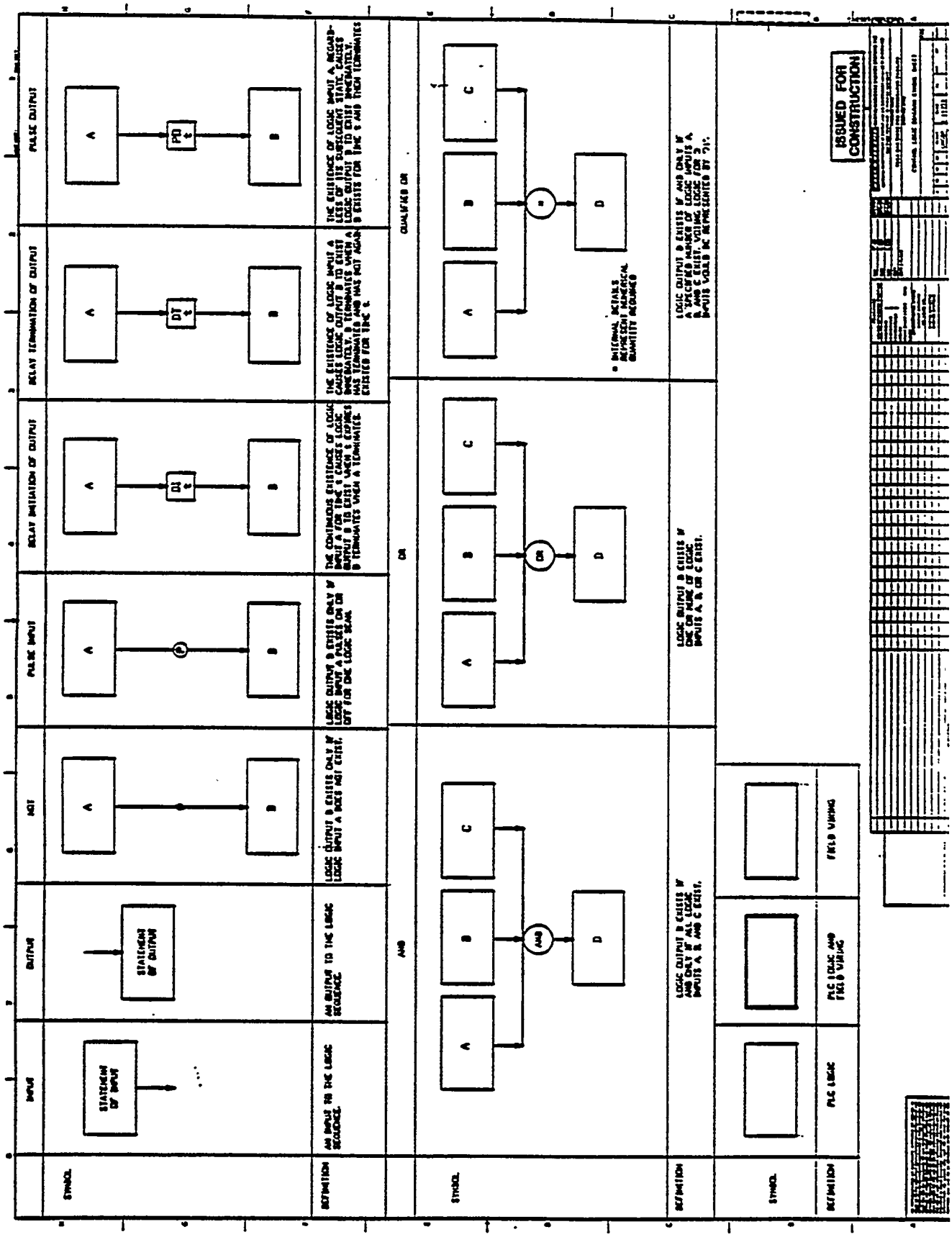
SYMBOL
DEFINITION
INPUT
STATEMENT OF INPUT
AN INPUT TO THE LOGIC SEQUENCE.
OUTPUT
STATEMENT OF OUTPUT
AN OUTPUT TO THE LOGIC SEQUENCE.
NOT
LOGIC OUTPUT B EXISTS ONLY IF LOGIC INPUT A DOES NOT EXIST.
PULSE INPUT
LOGIC OUTPUT B EXISTS ONLY IF LOGIC INPUT A PULSES ON OR OFF FOR ONE LOGIC SCAN.
RELAY INITIATION OF OUTPUT
THE CONTINUOUS EXISTENCE OF LOGIC INPUT A FOR TIME t CAUSES LOGIC OUTPUT B TO EXIST WHEN t EXPIRES B TERMINATES WHEN A TERMINATES.
RELAY TERMINATION OF OUTPUT
THE EXISTENCE OF LOGIC INPUT A CAUSES LOGIC OUTPUT B TO EXIST IMMEDIATELY. B TERMINATES WHEN A HAS TERMINATED AND HAS NOT AGAIN EXISTED FOR TIME t.
PULSE OUTPUT
THE EXISTENCE OF LOGIC INPUT A REGARDLESS OF ITS SUBSEQUENT STATE, CAUSES LOGIC OUTPUT B TO EXIST IMMEDIATELY. B EXISTS FOR TIME t AND THEN TERMINATES
AND
LOGIC OUTPUT B EXISTS IF AND ONLY IF INPUTS A, B AND C EXIST.
OR
LOGIC OUTPUT B EXISTS IF INPUTS A, B OR C EXIST.
QUALIFIED OR
LOGIC OUTPUT B EXISTS IF AND ONLY IF A SUFFICIENT NUMBER OF LOGIC INPUTS A, B, AND C EXIST. VOTING LOGIC FOR 2 INPUTS WOULD BE REPRESENTED BY ?/2.
* INTERNAL DETAILS REPRESENT NUMERICAL QUANTITY REQUIRED
PLC LOGIC
PLC LOGIC AND FIELD WIRING
FIELD WIRING
ISSUED FOR CONSTRUCTION

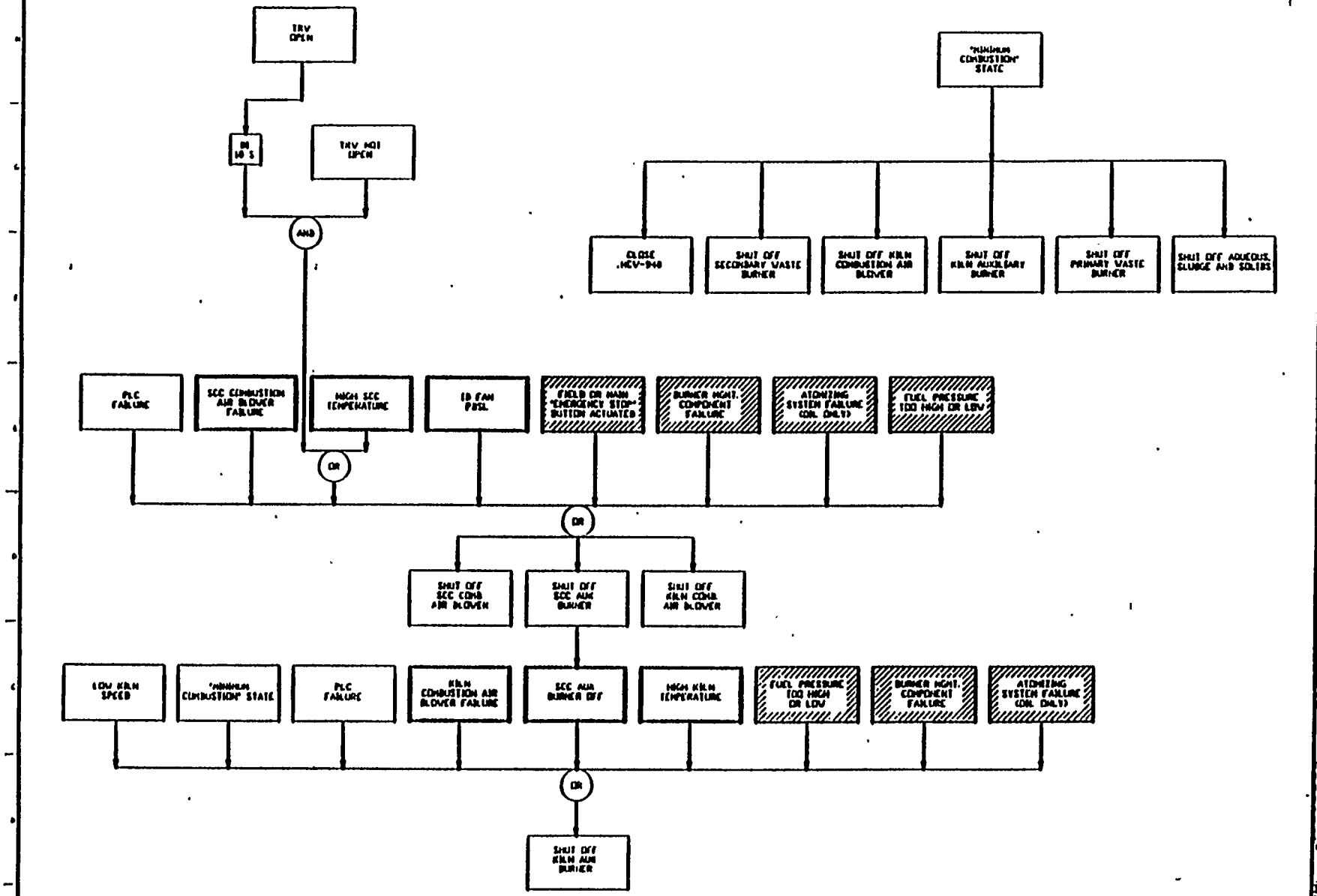

OFFICIAL USE ONLY

May 13, 1988

J-4

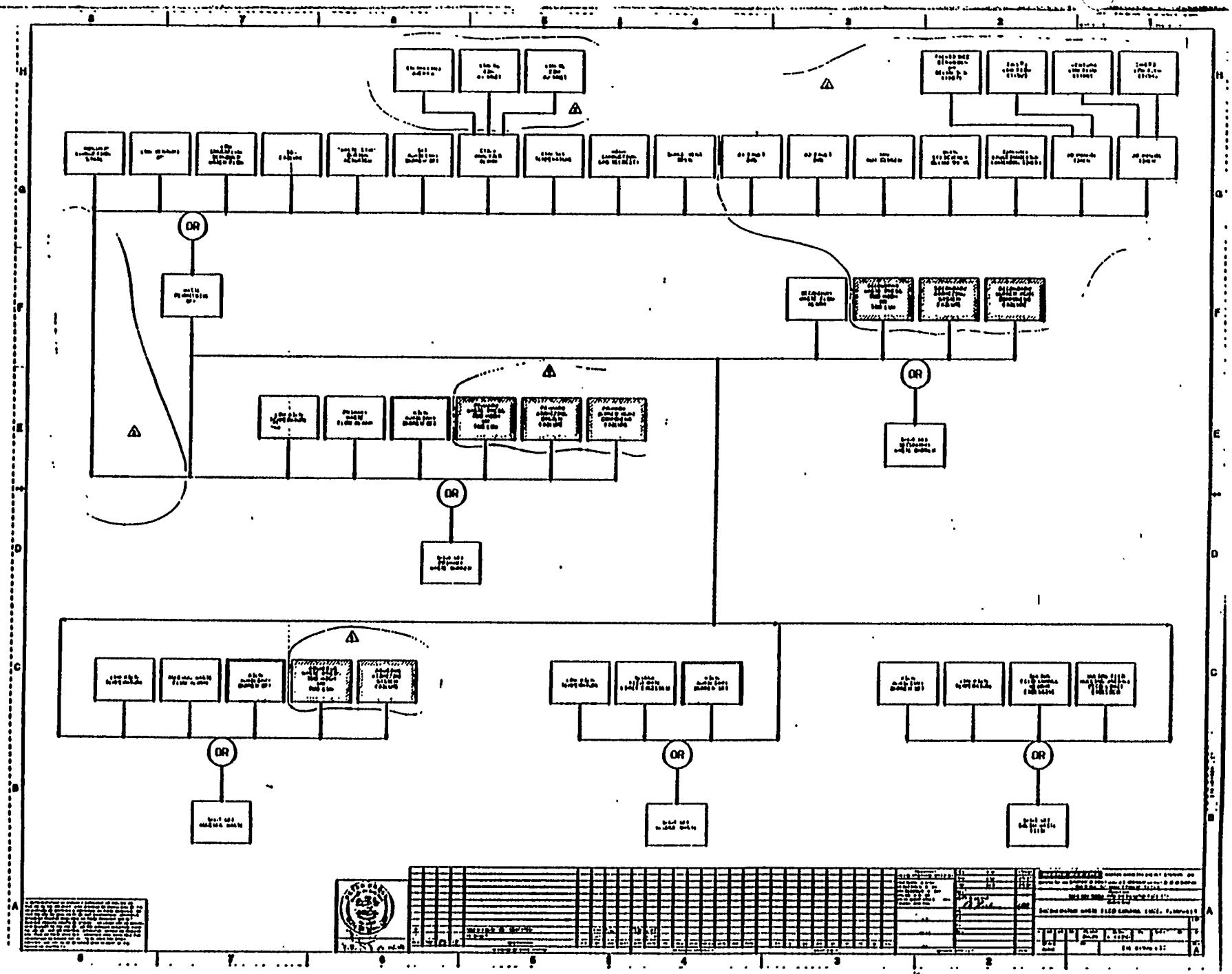
OR
OR
OR
OR
OR

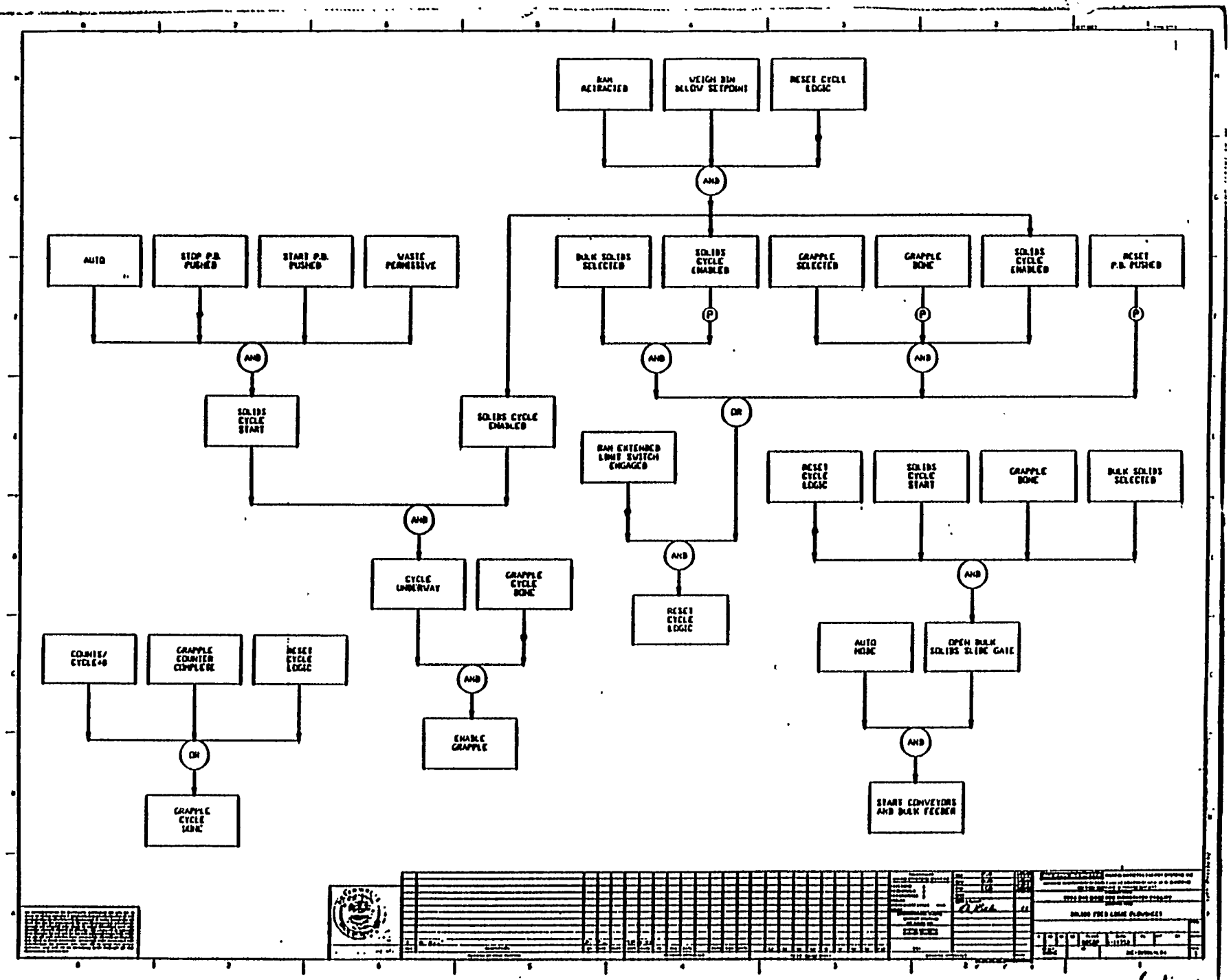

May 13, 1988

OFFICIAL USE ONLY

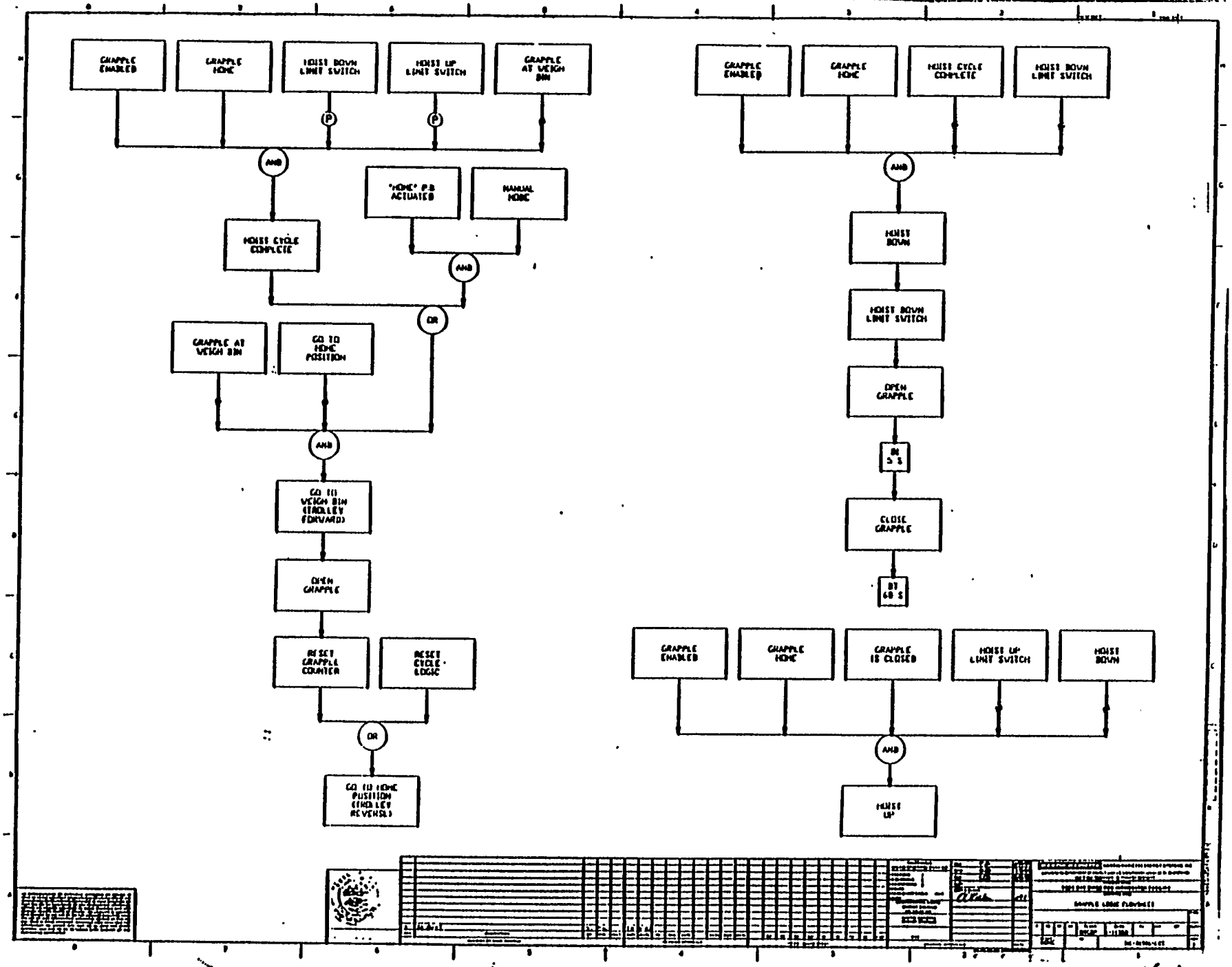
GRAPPLE ENABLED
GRAPPLE HOME
HOIST DOWN LIMIT SWITCH
HOIST UP LIMIT SWITCH
GRAPPLE AT WEIGH BIN
P
P
AND
HOIST CYCLE COMPLETE
"HOME" P.B ACTUATED
MANUAL HOME
AND
OR
GRAPPLE AT WEIGH BIN
GO TO HOME POSITION
AND
GO TO WEIGH BIN (TROLLEY FORWARD)
OPEN GRAPPLE
RESET GRAPPLE COUNTER
RESET CYCLE LOGIC
OR
GO TO HOME POSITION (TROLLEY REVERSE)
GRAPPLE ENABLED
GRAPPLE HOME
HOIST CYCLE COMPLETE
HOIST DOWN LIMIT SWITCH
AND
HOIST DOWN
HOIST DOWN LIMIT SWITCH
OPEN GRAPPLE
CLOSE GRAPPLE
GRAPPLE ENABLED
GRAPPLE HOME
GRAPPLE IS CLOSED
HOIST UP LIMIT SWITCH
HOIST DOWN
AND
HOIST UP

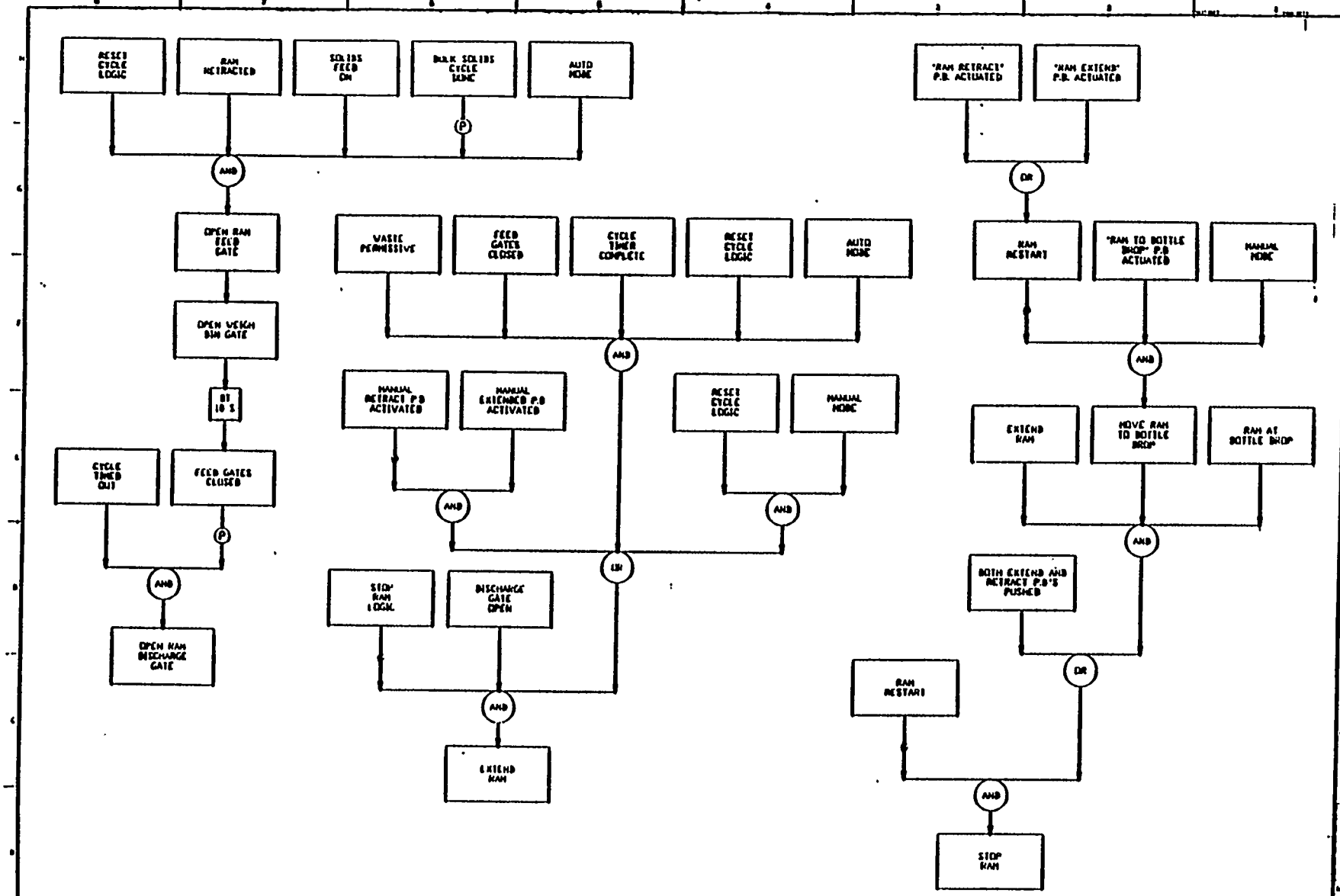

May 13, 1988

OFFICIAL USE ONLY

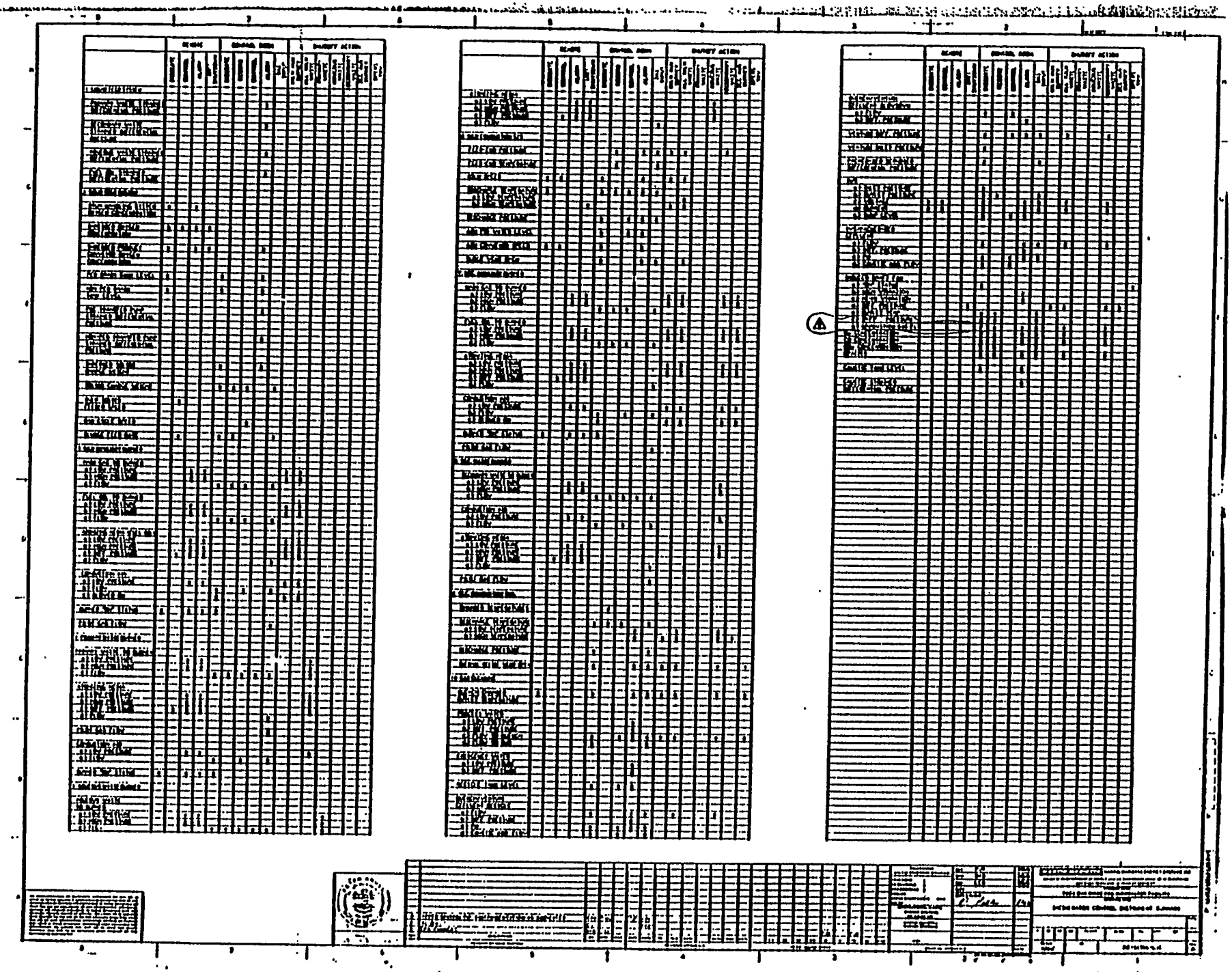

May 13, 1988

J-9

OFFICIAL USE ONLY

APPENDIX K

Electrical Schematic Diagrams(*)

E1E-81906-DN01	Tank Farm and Material Feed
-DN02	Material Feed System
-DN03	Gas Cleaning Train
-DN04	Combustion System
-DN05	Secondary Combustion Chamber
	- Burner Control
-DN06	Primary Combustion Chamber
	- Burner Control
-DN07	Miscellaneous Electrical Additions

*As-built drawings available 5/88

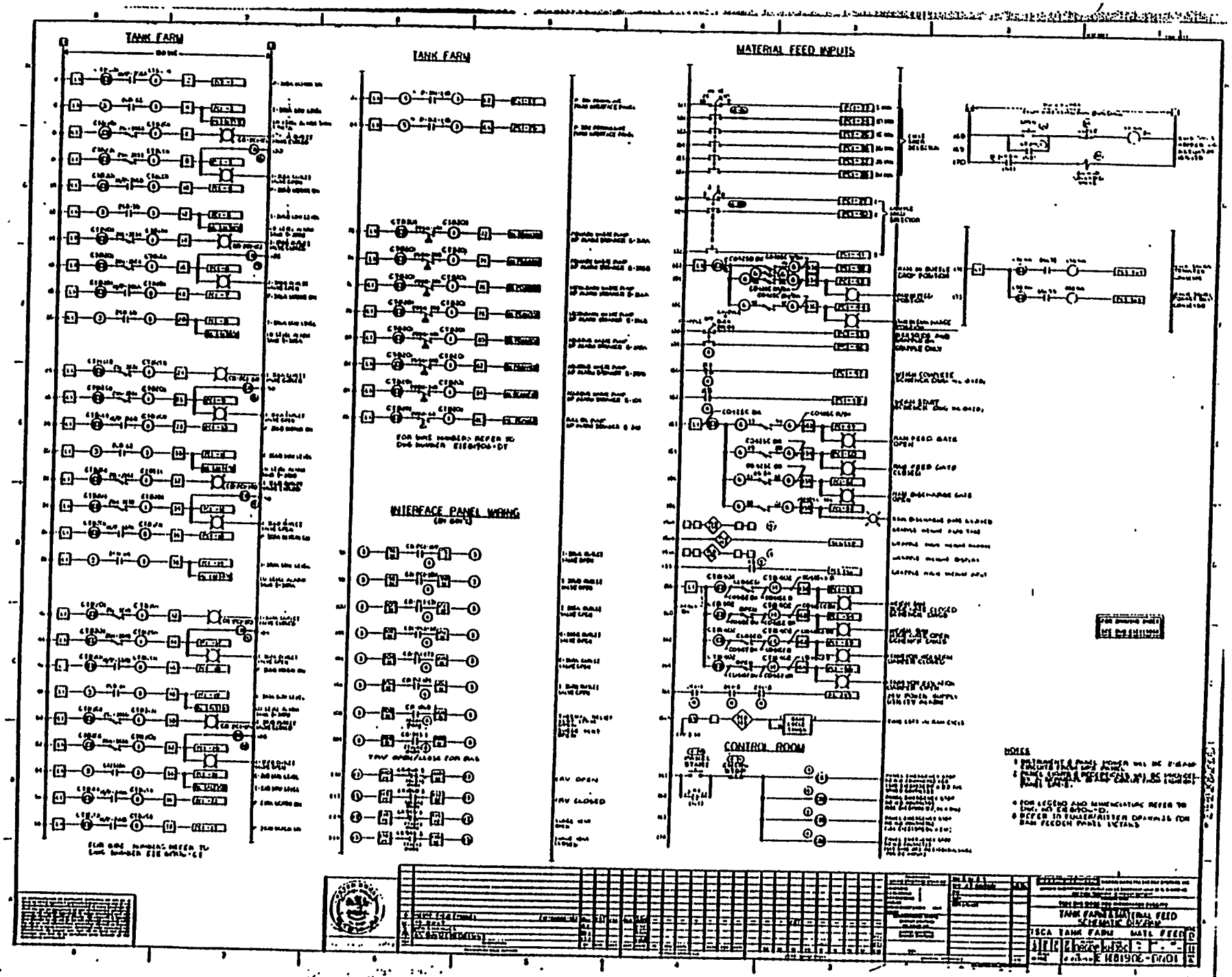

May 13, 1988

K-2

OFFICIAL USE ONLY

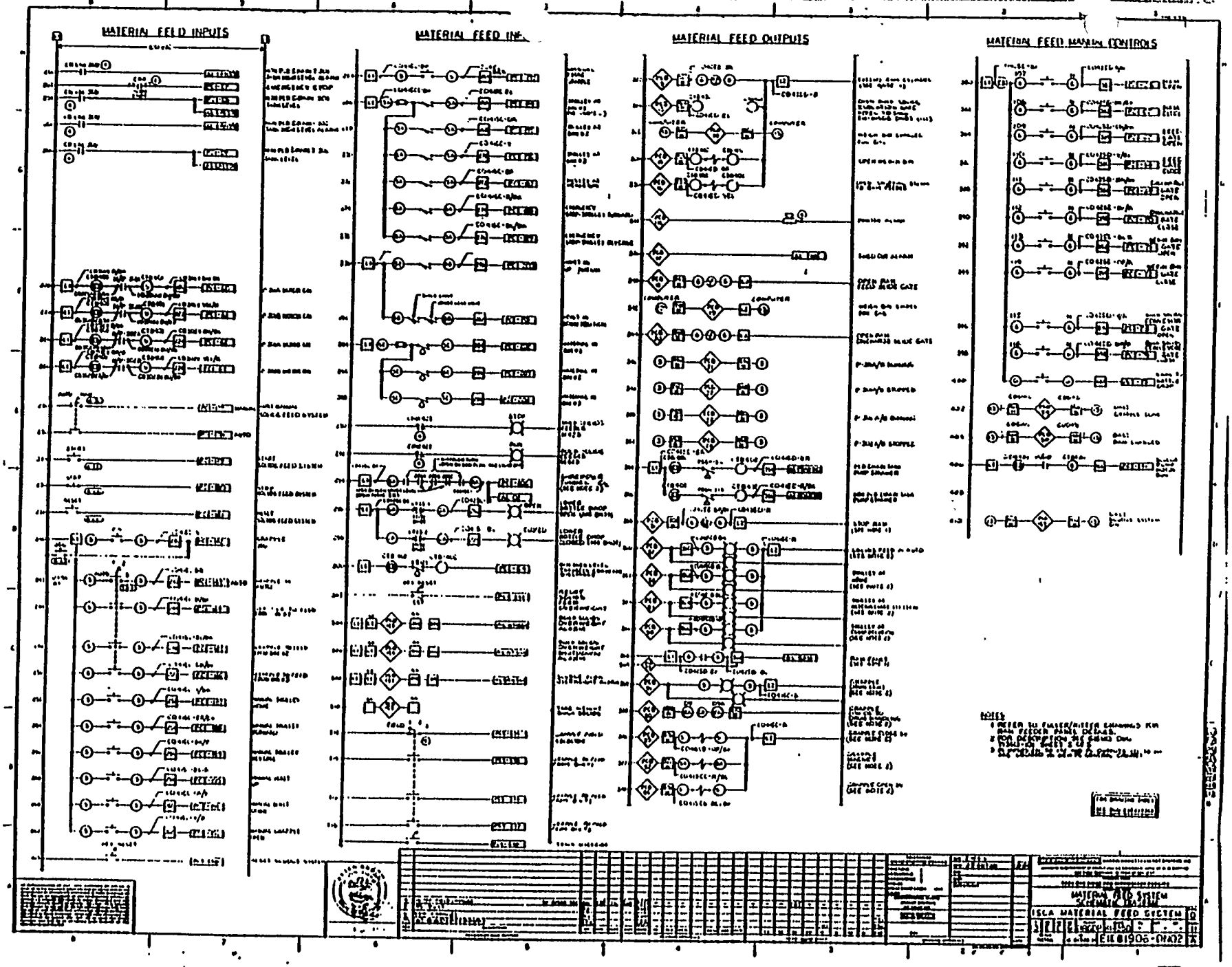

May 13, 1988

OFFICIAL USE ONLY

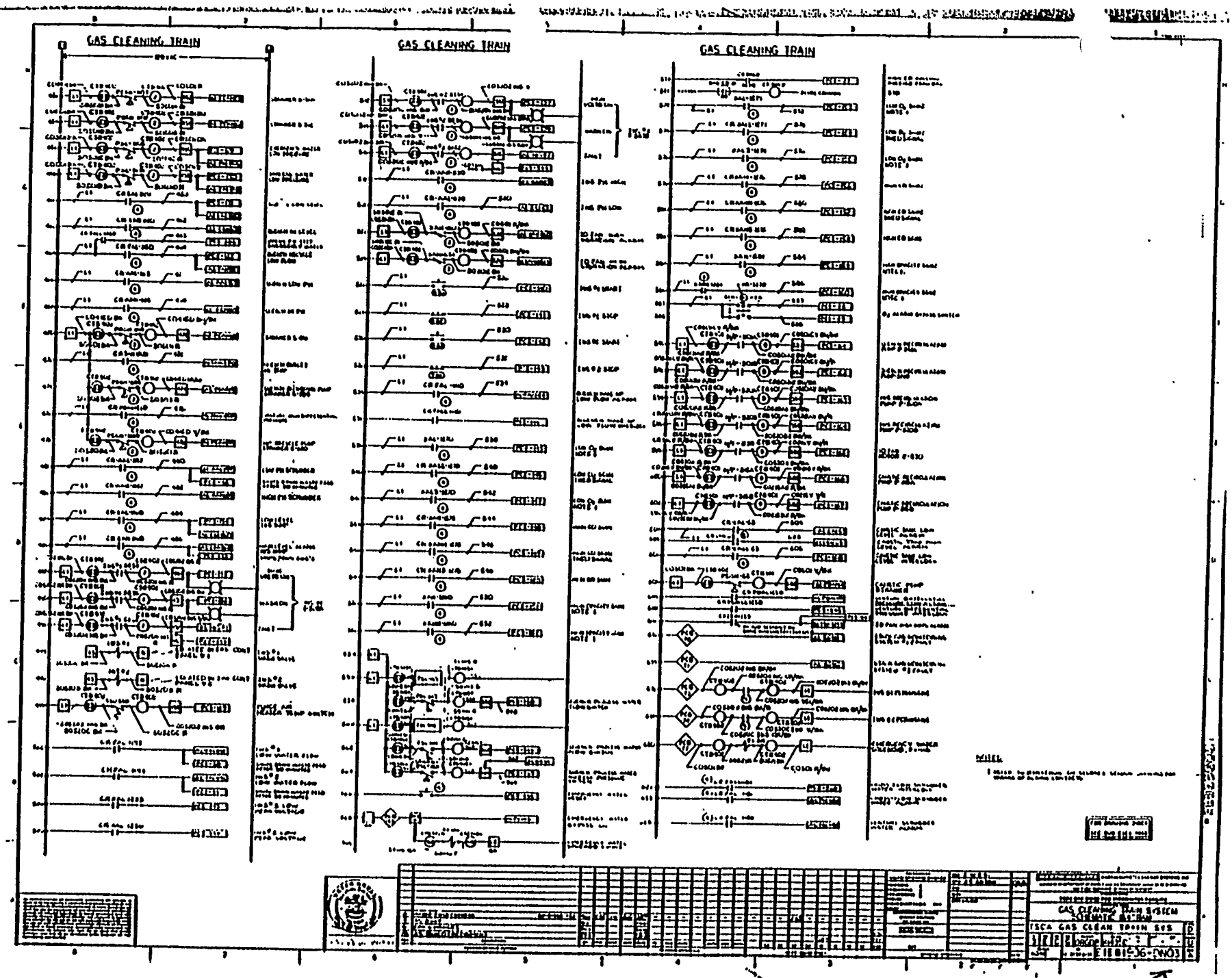

May 13, 1988

OFFICIAL USE ONLY

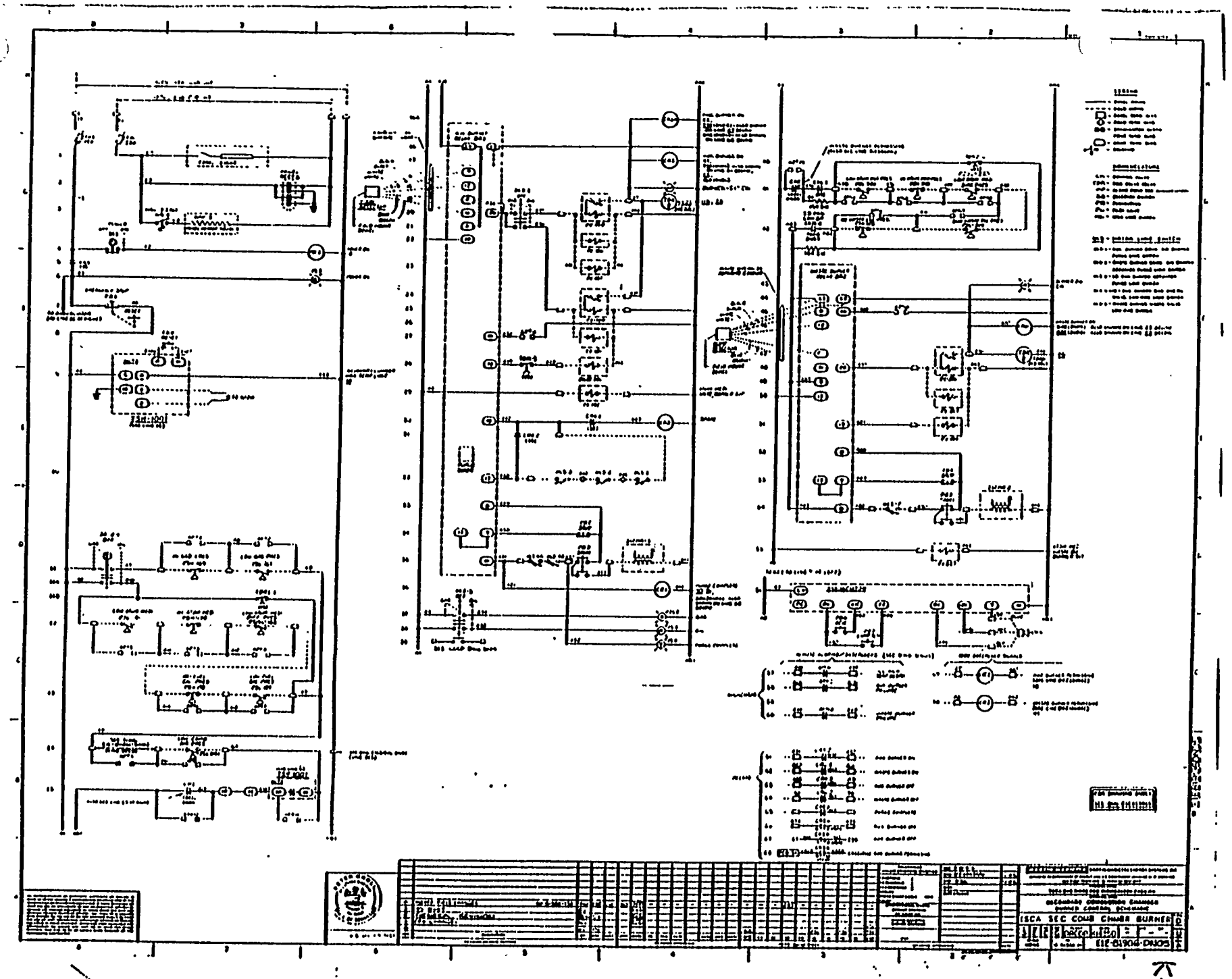

May 13, 1988

OFFICIAL USE ONLY

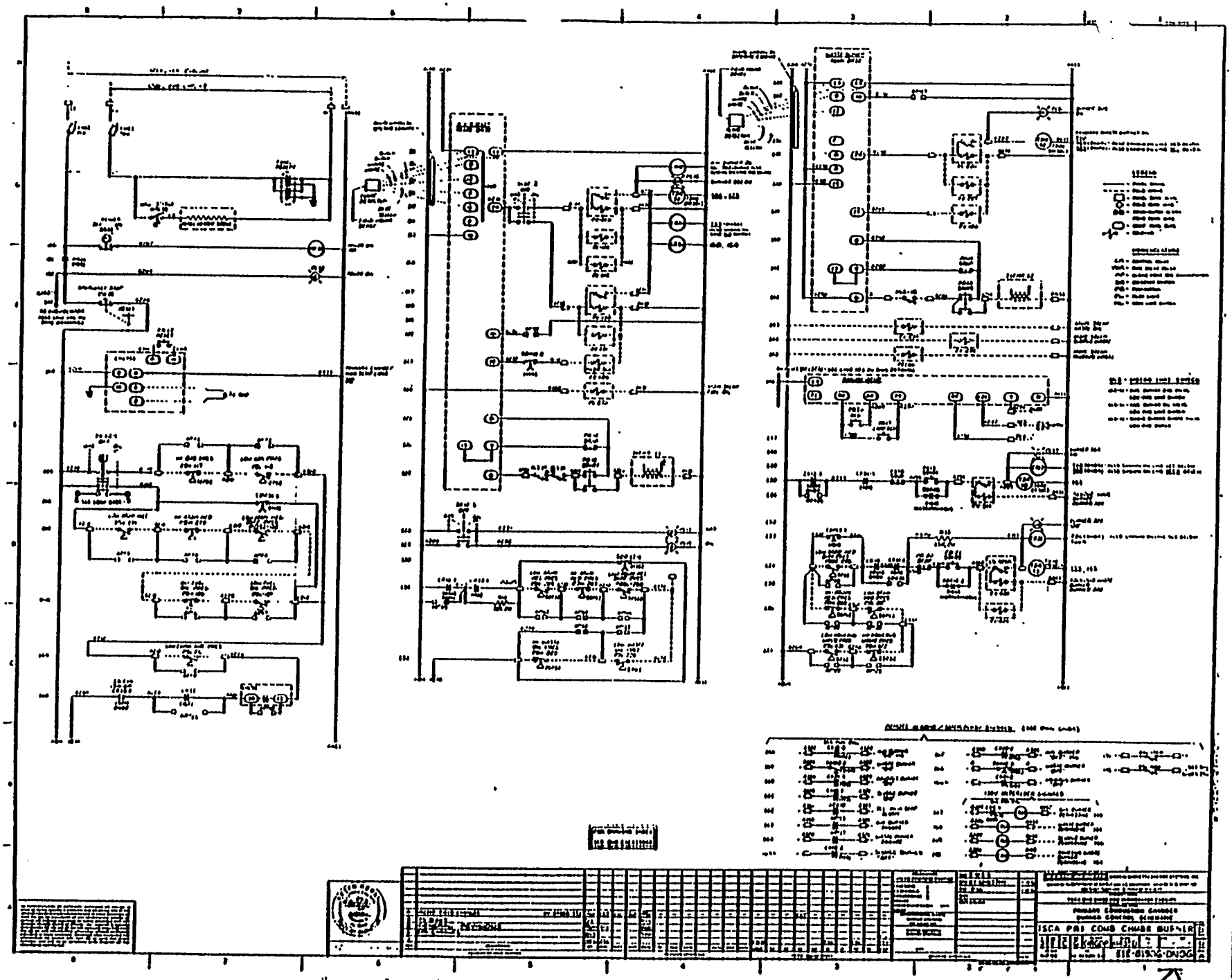

May 13, 1988

OFFICIAL USE ONLY

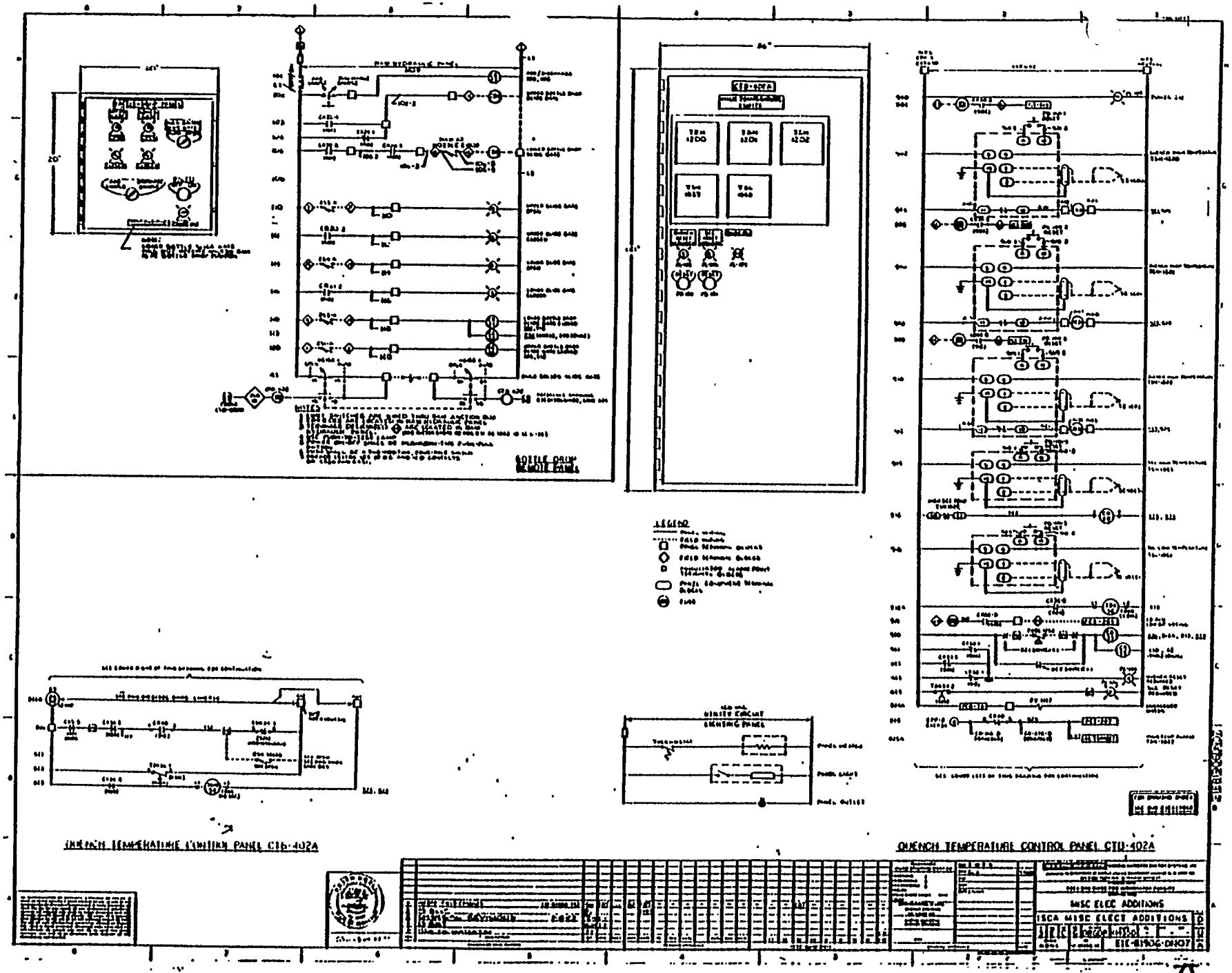

OFFICIAL USE ONLY

Appendix L

March 16, 1991

Major Fire in Tank Farm Bounding PCB Fire Accident Scenario

CONTENTS

L.1 Introduction/Description L-1

L.2 Scenario/Frequency L-4

L.3 Source Term L-6

L.4 Dispersion Analysis L-8

L.5 Health Assessment L-12

L.6 Off-site Radiological Dose L-20

L.7 References L-21

LIST OF TABLES

Table L.3-1. PCB Fire By-Products Estimates Developed from Fire Data L-8
Table L.3-1. PCB Fire By-Products Estimates Developed from Fire Data L-8
Table L.4-1. Estimates of PCB Concentrations L-11
Table L.4-2. Estimates of PCB Concentrations and Combustion Products L-11
Table L.4-3. Estimates of Ground-Surface Concentrations L-11
Table L.5-1. Lowest Lethal Doses of TCDD in Laboratory Assays L-14
Table L.5-3. Relative Potency of Congeners L-16
Table L.5-4. Relative Carcinogenic Potencies of PCB Fire Products L-18
Table L.5-5. Summary of Airborne Carcinogenic Potency of Fire Products Based on the Potency of PCBs L-19
Table L.6-1. Radiological Concentrations and Exposures L-21

LIST OF FIGURES

L.1-1 Plan View of K-1435 Incineration Facility..... L-2

L.1-2 Simplified Process Flow Diagram for K-1435 Tank Farm..... L-3

Appendix L
TSCA FSAR
K/D-SAR-11, Rev. 2

L.1 Introduction/Description

Introduction

This appendix provides a detailed analysis of the major fire accident scenario in the TSCA Tank Farm. The analysis addresses background information, scenario description, event frequency, source term justification, dispersion model and calculation information, and a health assessment including offsite toxic chemical and radiological impacts.

Potential health effects resulting from the PCB fire have been evaluated using the scenario developed in section L.2, along with source-term information in section L.3, the results of meteorological modelling in section L.4, and toxicological and pathway data developed in section L.5. Using a series of conservative assumptions in each of these accident components, adverse health consequences are projected to be very small. Acute (immediate) and chronic (after many years) responses are not expected to be manifest in any exposed persons. Chronic responses, estimated by assuming that 30,000 (nominally the population of the City of Oak Ridge) people are exposed to centerline concentrations of primary (PCB) and secondary (TCDD, etc.) products, are expected to be less than one induced cancer. Similarily, the radiological impact from the same accident scenario was also evaluated with a resulting offsite dose at 0.6 kilometers being about 6 mrem. The dose decreased as a function of increasing distance from the accident location. This level of exposure is considered to have negligible health effects as described in Biological Effects of Ionizing Radiation (BEIR) 1990 reports.[1] Given the many conservative assumptions in the analysis, health effects resulting from a PCB fire at the TSCA are predicted to be negligible.

Tank Farm Area Description

The TSCA Tank Farm is located in the K-1435C Unloading and Storage Area as illustrated in the plan view in Figure L.1-1 and the flow diagram in Fig. L.1-2. The entire area is diked with drains that collect into two 235 gallon collection sumps. The tank farm is also covered by a roof to minimize the amount of rain water that might accumulate and has sides that are open to allow for proper ventilation.

March 16, 1991

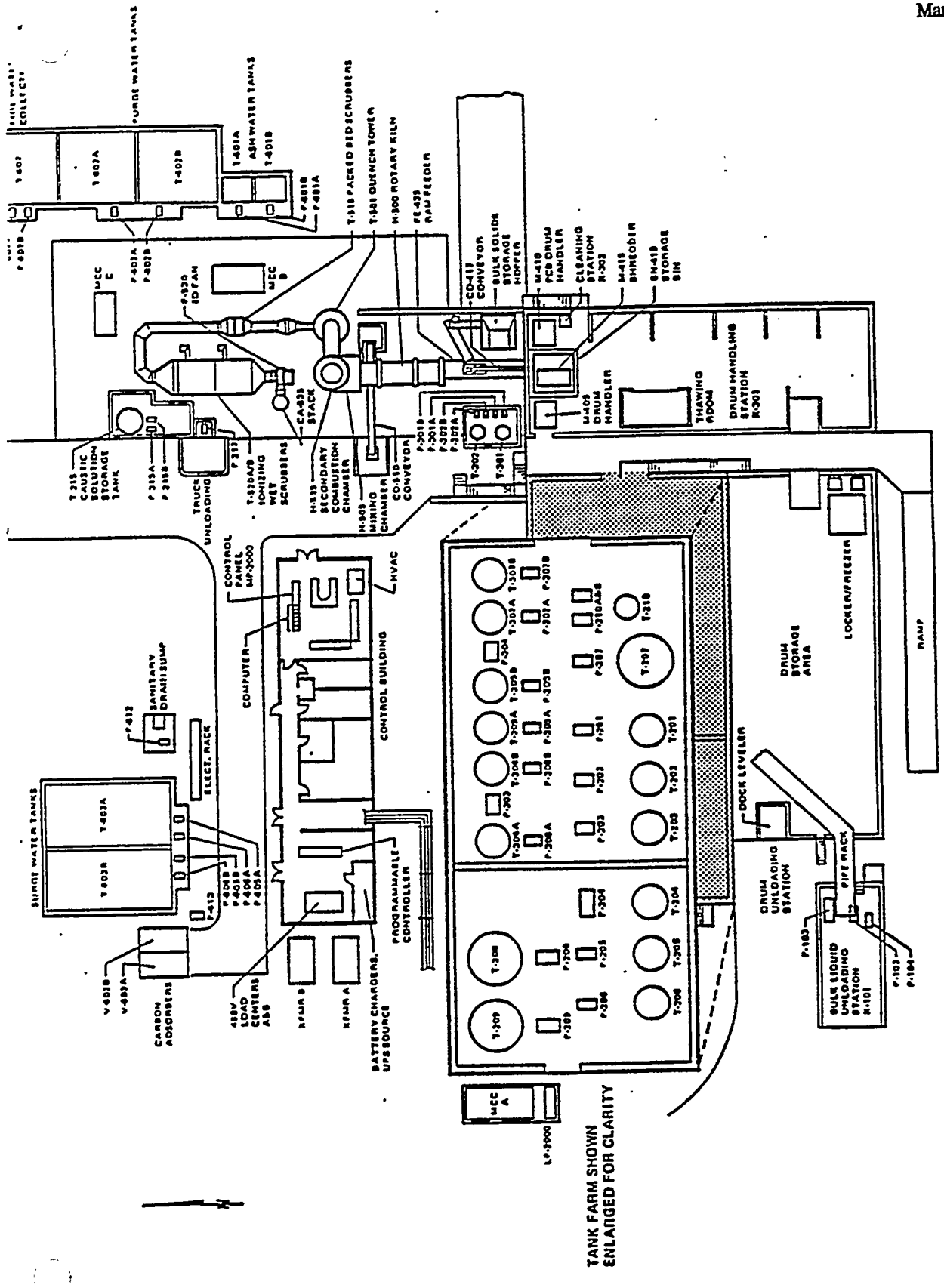

Figure L.1-1 Plan View of K-1435 Incineration Facility

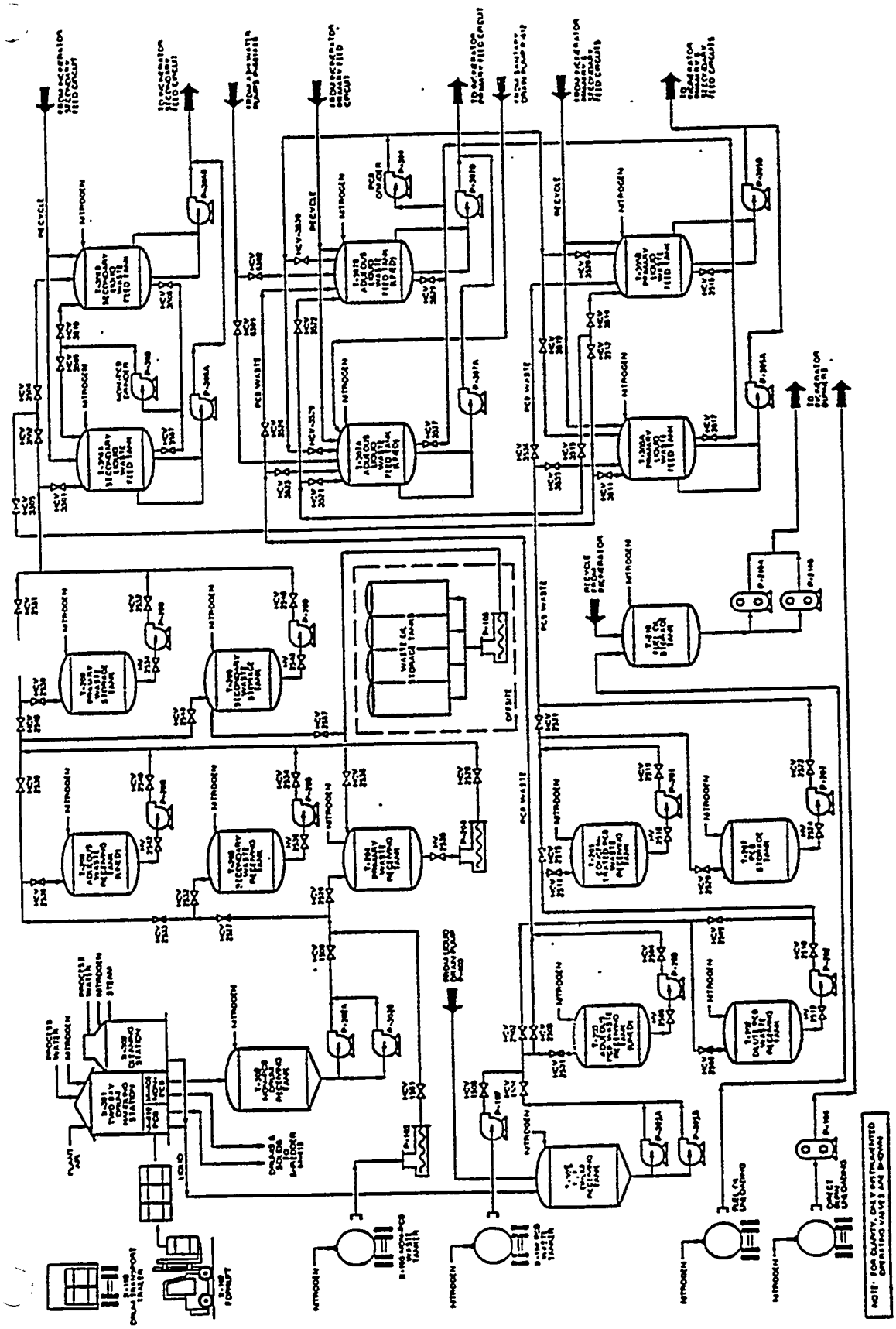

Figure L.1-2 Simplified Process Flow Diagram for K-1435 Tank Farm

Fifteen tanks are located in the area to provide storage for liquid wastes. These tanks are described in section 4.3.2 of the FSAR. All tanks are supported vertically above ground on pipe legs. The foundations and supports are designed to sufficiently support the weight of full tanks. In addition the support legs are protected with fireproofing materials that provide a three hour protection rating in accordance with ASTM E-119. One tank containing PCB aqueous wastes and three tanks containing non-PCB aqueous wastes are lined with 1/4-inch of Hetron 800 fiberglass-reinforced furan resin to protect against damage due to chemical attack. The remaining tanks in the area have a 1/16-inch corrosion allowance. Weld seams have been inspected in accordance with the manufacturer's specifications and with applicable construction codes at the time of tank fabrication to ensure integrity of the weld seams throughout the expected service life of each tank. All tanks have been designed in accordance with the 1982 Universal Building Code, Seismic Zone 2 requirements. In addition, the tanks have been constructed in accordance with ASME construction codes and have an allowable stress of at least 17,500 psi for both shell and head.

Protective measures taken at the tank farm include two diked areas that are depicted in Figure L.1-1. Each diked area is constructed of a minimum 1'-6" thick concrete boundary that rises a minimum of 1'-0" above the floor area to a maximum of 1'-6" above the floor at the collection sumps. The dimensions for the diked areas are about 60' x 86'-3" (5180 ft^2) and 60' x 52'-3" (3130 ft^2). Assuming an average depth of 1'-3" for both areas, the total containment volumes would be about 6470 ft^3 (48,400 gal) and 3920 ft^3 (29,300 gal). The collection sump drain valve is presently kept closed to contain inadvertent spills. In addition, the diked area is provided with a fixed automatic water deluge system with provision for a manual injection of foam as well. Other measures provided for prevention of fire hazards are described in Chapter 4 of the FSAR.

Tank Farm Operations

The four basic operations that are performed in the tank farm area of the facility are: 1) Receiving and Sorting, 2) Process Storage, 3) Feed Preparation, and 4) Waste Feed System. Each of these operations are described in sections 4.3.1 through 4.3.4 of the FSAR. Figure L.1-2 provides an illustration of the system configuration within the tank farm area.

Receiving and Sorting operations include the unloading of tankers containing liquid wastes. The waste is transferred from the tanker into the storage tanks via the proper alignment of valves and pumps. Process Storage is basically the storage of the liquid waste in the tanks provided for an undetermined amount of time. Feed preparation (liquid waste only) involves the mixing of wastes in the tanks by transferring wastes from one tank to another to provide the right mixture for incinerator feed. The Waste Feed System primarily consists of pumping the liquid feed prepared for incineration to the incinerator via the proper arrangement of valves and pumps.

L.2 Scenario/Frequency

Various protection features are provided during all types of operation to preclude accident situations from occurring. All of these features are discussed in the FSAR sections associated with the process operation areas described above. A review of the potential scenarios for release of the worst type of material expected (PCBs with uranium contamination) in the storage tanks to the atmosphere was performed. A release of PCBs to the diked area would not pose a significant threat unless it was combined with a fire. The fire would cause the release to the atmosphere of toxins associated with the waste and waste combustion products, as well as potential radiological contamination. With normal operations, some spills are expected to occur along with some minor fires. However, the magnitude of the spill and extent of a fire would be limited due to the various types of preventive and mitigative systems provided. Therefore, common cause events for tank failure and fire initiators were considered as the most likely cause of a major release of PCBs from the tanks and the potential fire initiation as well.

After a review of the tank contents described in section 4.3.2 of the FSAR, it was assumed that 1800

gallons from the 2500-gallon diesel fuel oil tank (Tank T-210) would be released into the diked area. A variation in the amount of fuel oil assumed to leak into diked area does not significantly affect the results of the analysis since the uncertainty in the health effects characterization is much greater than the source uncertainty. In addition, the 10,000 gallon PCB storage tank (Tank T-207) was assumed to fail and release 10,000 gallons of contaminated PCBs into the same diked area. This results in 11,800 gallons of PCB and fuel oil mixture within the diked area. A fire is initiated by the event and burns until all material is burned. Although other tanks could fail and add to the mixture, the concentration of PCBs would be more likely decreased (see section L.3). Therefore, only one PCB tank was assumed to fail.

A probabilistic approach to this scenario reveals that, in order for the major tank farm fire scenario to occur, simultaneous failure of the fuel oil tank and the large PCB tank is required, in addition to a simultaneous source of ignition for the PCB/fuel oil mixture. In mathematical form, this may be represented as:

$$fm = ffo \times fpcb \times ffire$$

where fm = frequency of major tank farm fire
ffo = frequency of a fuel oil tank failure
fpcb = frequency of a PCB tank failure
ffire = frequency of a source of fire in the tank farm (assumed to be 1 for Safety Analysis Reports)

The frequency[2] of a random tank failure is approximately 2.3×10^{-6} failures per year. If a tank failure occurs and empty tanks are available, the spilled material from the failed tank will be transferred within a few hours to the empty tank. If there are no empty tanks available, the spilled material will be transferred within 24 hours to empty 55 gallon drums. The simultaneous random failure of both tanks can therefore be conservatively estimated by determining the probability that both tanks would fail simultaneously within a 24 hour period. The annual probability of having both tanks independently fail within a 24 hour period is $2.3 \times 10^{-3} \times (2.3 \times 10^{-3}/365)$ or 1.45×10^{-8}.

A common cause failure of both tanks could potentially result from either a natural phenomena event or from human error.

A review of potential common cause initiators (primarily natural phenomena) determined that a design basis earthquake could cause simultaneous failure of more than one tank. These failures would be caused by the ground acceleration exceeding the design basis for the tank supports. A design basis earthquake for the TSCA incinerator is stated in section 5.4.1 of the FSAR as having a recurrence interval of 237 years, which corresponds to a frequency of 4.2×10^{-3} per year.

Because there are no common valves or pipes that could serve as a source for simultaneously draining both tanks, the only credible common cause mechanism for simultaneous failure due to human error would be a common cause maintenance error (e.g. using defective valves). A reasonable estimate of a common cause failure would be on the order of 10^{-3} per operation. Using a conservative estimate of 10^{-2} results in an estimate for the simultaneous failure of both tanks during a 24 hour period of $10^{-2} \times 10^{-2}/365$ or 2.7×10^{-7}. If ten maintenance actions occur per year that involve both tanks (which is highly unlikely), the annual probability of failure becomes 2.7×10^{-6}. This is a very conservative estimate because the failure of a valve or component would most likely result in a small leak, and even if common cause errors were initiated in both tanks at the same time, it is highly unlikely that both tanks would leak at the same time.

In investigating the design basis earthquake, it is also assumed that the fire protection systems would be rendered inoperable and that broken electrical conduit would result due to the design basis earthquake, thereby providing a source for ignition. A further factor of conservatism is introduced into the analysis by not taking credit for failure of the aqueous material storage tanks or failure of the containment dike. Failure of

these tanks could contribute to the mitigation of the fire as discussed in section L.3 and failure of the dike would decrease the amount of material that would burn due to removing material from the burning region (e.g. by absorption into the ground). In addition, high winds/tornados were considered as a common cause initiator for the required events. Missiles were not a significant hazard based upon UCRL-15910[3], page 5-5, Table 5-2 for low hazard facilities (see FSAR subsection 5.4.2). However, the recurrence interval for the design basis wind is found in the FSAR to be significantly less than that for design basis earthquakes, resulting in the earthquake being the bounding contributor to the initiating event frequency.

In summary, it is concluded that the design basis earthquake (estimated frequency of 4.2×10^{-3} per year) can be taken to be a reasonable estimate of an upper bound with respect to initiation of the major tank farm fire.

L.3 Source Term

Quantity of PCB Material

The two quantities of interest in relation to the source term for the proposed major tank farm fire are the amount of the PCBs in the major fire scenario and the rate of release of PCBs and PCB incomplete combustion by-products from this fire. In the K-25, Paducah, and Portsmouth plants a considerable amount of 65% PCB - 35% trichlorobenzene was used in various places. After a review of the potential sources of PCB contaminated material that could come to TSCA for incineration, the 65% PCB - 35% trichlorobenzene was considered to be the worst case concentration which could conceivably fill the 10,000 gallon tank in the waste storage area. According to TSCA management personnel, other tanks may contain waste with a concentration from zero up to 2,000 ppm PCB at any given time. Approximately half of the other tanks would contain PCBs in an organic fluid, and the amount of PCBs would be approximately 400 lb assuming the concentration of the tanks was 2,000 ppm. This quantity would add only about 0.5% to the PCB in the 10,000 gallon tank and may thus be neglected.

If the assumed fire in the waste area actually ruptured other tanks, several aqueous tanks would also likely be involved. The aqueous waste would suppress the fire because the aqueous (therefore non-flammable) material is lighter than the heavy 65% PCB material even if the 65% PCB material were mixed with a considerable amount of other lighter organic fluid, and would tend to float on top.

Rate of Release

From an article by Eschenroeder and Faeder[4] (pp 291, 292) it is clear that arriving at a burning rate is not a clear cut procedure. The article gives a range of values. The rate of 0.00006 m/s is given as an asymptotic value based upon observational data from several oil fires. At a pool diameter of 1 m the rate is the asymptotic value. Another source quoted by Eschenroeder and Faeder[4] suggests a "lower bound" rate of from 2 to 3 times lower than 0.00006 m/s based upon radiant heat output for fires from 3 to 15 m in diameter.

Several considerations suggest that a lower rate rather than a higher rate of burning would be anticipated for the 65% PCB fire considered. The situation for the waste storage is somewhat confined and fresh air will not flow as readily to the interior of the fire area as to a smaller less confined pool. The waste tanks cover an appreciable fraction of the diked surface and will thus restrict and could actually eliminate air flow to the part of the pool under the tanks. The roof over the whole area, though at an appreciable height, would be expected to further restrict air flow to the interior of the very large (60 ft x 86.25 ft) burning oil pool. Additional restriction of air flow would also be expected due to tank and roof failures in the event of an earthquake in excess of the design basis. It is noted from the above paragraph that for the larger pools (3 to 15 m) the lower burning rate is implied. Also PCB will have a lower burning rate than other oils because it is not nearly as flammable as lighter, non-chlorinated oils. The low flammability is due to the low vapor pressure, and would be the factor which would cause a lower rate of evaporation in the interior of the fire with

a consequent lower rate of burning than for a more volatile oil with a higher vapor pressure. An additional factor is the distillation effect which would be operative. When the assumed mixture of oils is heated and vaporized, vaporization being necessary for burning, the lighter oils will tend to evaporate preferentially, that is, the vapor will contain a higher proportion of the lighter oil than the heavier oil relative to the liquid mixture. The lighter fuel oil will tend to be vaporized more readily and thus burn relatively more quickly leaving behind the heavier, less flammable chlorinated oils. PCBs low flammability is a major reason it is used in electrical transformers. The rate of burning should slow down appreciably as the more volatile oil is consumed. The factors discussed above such as the large size of the pool (60' x 86.25') coupled with the restriction on air flow imposed to the center of the pool by the tanks and roof would tend to encourage the use of a lower value of burning rate.

If a burning rate of 3.7 in/h is chosen (i.e. a little higher than the lower burning rate, 1/3 of the previously referenced rate of 0.00006 m/s, 8.4 in/h), then the time for burning the entire spill can be determined. Using 10,000 gallons of 65% PCB - 35% trichlorobenzene and 1,800 gal of fuel oil (11,800 gal or 1,578 ft^3 total), the total burn time would be:

$$\text{time} = \frac{(1578\ ft^3)(12\ in/ft)(60\ min/h)}{(60\ ft)(86.25\ ft)(3.7\ in/h)}$$

$$= 60\ min$$

The 10,000 gallons of 65% PCB has a specific gravity of 1.44 (Martin Marietta Material Safety Data Sheet 01798) and would contain 78,000 lbs (36,000 kg) of PCB. The PCB burning rate is thus (36,000 kg)/(60 min) = 600 kg/min.

If it is assumed based on PCB fire data[5,6] that soot from a PCB fire is the carrier for unburned PCB (and by-products), the amount of PCB escaping from a fire may be estimated.

A value of 0.1 gm soot formed/g PCB burned is conservatively estimated for this accident scenario. The initial carbon fraction (0.44) in the Aroclor 1254 ($C^{12}H^5Cl^5$) could result in formation of 0.44 g soot/g PCB which would bound the maximum soot possible. Soot is also likely from the oil component of the PCB-oil mixture. The 0.1 g soot to initial PCB value implies that about 20 percent (0.1/0.44) of the PCB molecules are dehydrochlorinated to form carbon during an incomplete combustion process. The lack of oxygen for complete combustion could result from the roof over the tank farm area permitting back pressure due to hot gas expansion. A lower bound on the soot formation can be estimated from data from a large PCB fire (650 kg PCB burned) in an 18 story building in Binghampton, NY that showed a value of 0.00683 g/m^2 of soot on the surrounding surfaces[5,6]. Assuming conservatively that the entire 18 floors were covered with soot and that each floor has approximately 50 m by 50 m of covered surface area, the total amount of soot would be 307 g. The amount of soot produced per amount of PCB burned would then be 307/650,000 or 0.00047 g/soot/g PCB burned.

An additional estimate is made that 0.1 g PCB will be contained on each gram of soot based on PCB fire data[5,6]. The derived source term is then (600 kg/min PCB burned) (0.1 g soot/g PCB) (0.1 g PCB on soot/g soot)or 6 kg/min PCB released. A review of the analysis including soot formation assumptions has been made and supports these analysis assumptions.[6a]

Table L.3-1 provides information on the concentration of PCB fire byproducts. These are the result of incomplete combustion of PCB and are very toxic. The PCB Fire By-Product Estimates are representative of information reported in the NIOSH Current Intelligence Bulletin 45[6]. The values in the table are given as grams of by-products per gram of PCB remaining (on soot) after combustion. Subsequent PCB combustion experiments have been done[6b] which provided additional information on PCB by-products.

Table L.3-1. PCB Fire By-Products Estimates Developed from Fire Data

PCB	polychlorinated biphenyl	1.0
PCDF	polychlorinated dibenzofurans	2.7 E-2
TCDF	2,3,7,8-tetrachlorodibenzofuran	2.6 E-3
PCDD	polychlorinated dibenzo-p-dioxins	3.6 E-4
TCDD	2,3,7,8-tetrachlorodibenzo-p-dioxin	3.4 E-6

Laboratory studies cited in the NIOSH bulletin[6] have indicated that polychlorinated dibenzofurans (PCDF) and polychlorinated dibenzo-p-dioxin (PCDD) are formed in the pyrolysis of PCBs at temperatures ranging from 500 to 700 degrees C. Below this range, little decomposition is observed and, above this range, the combustion approaches the safe distribution of decomposition products generated in the incinerator operating under permit conditions. As reported by NIOSH, the thermal stability and non-flammability of PCBs made the use in electrical transformers attractive. Thus it is intuitively obvious that increasing concentrations of PCB would tend to have the effect of retarding a fire involving a mixture of PCB-containing oil and fuel oil leading to lower temperatures. Conversely, lowering the concentration of the PCB-containing oil would tend to raise the burning temperature. Thus, production of PCDDs and PCDFs would decrease as temperatures move out of this range in either direction.

L.4 Dispersion Analysis

Models

Two models were used to estimate the concentrations of PCB and its combustion products in air due to atmospheric dispersion. The two models differ considerably in their mathematical description of the dispersion process and it was felt that relative agreement between the results of the two models would offer a degree of confidence in the results.

The first model is AFTOX (Kunkel, 1986[7]) which is a "puff" dispersion code developed by the US Air Force to estimate impacts from spills of toxic materials. It is based on an earlier code called SPILLS (Fleischer, 1980[8]) which was developed for the Shell Oil Company. Puff models have the ability to incorporate a wind pattern which may change with time and location. They are most valuable in emergency response or post-accident predictions or in analyzing situations where physical conditions may cause the down-wind plume trajectory to depart significantly from a straight line.

The second model is based on a simple Gaussian plume mechanism (Randerson, 1984[9], pp 218, Equation 6.264). It assumes a simple, diffusion-like mechanism with a straight-line wind. It estimates the ground-level concentrations directly down-wind from the release, which are conservatively high, and is very simple to use. The model uses dispersion coefficients recommended by Briggs[10] for level ground and open-country conditions (Randerson, 1984[9], pp 593, Table 13.4). The coefficients are a function of the downwind distance and the atmospheric stability class. There are 6 stability classes normally considered, ranging from A (extremely unstable) to F (moderately stable). NRC also considers an additional class (G).

Deposition rates of PCB and its combustion products on the ground were estimated as the product of a deposition velocity and the corresponding ground-level concentration in air (Randerson, 1984[9], pp 534, Equation 12.1). Experimental values of deposition velocities for particles range over several orders of magnitude (Randerson, 1984[9], pp 547 to 551). A value of 0.1 cm/sec was selected as being representative for the small particles expected from a PCB fire. In reality, the concentration in air should be decreased due to deposition that occurs between the source and the location of interest. However, this adjustment was not made so both the air concentrations and the deposition rates tend toward upper-bound values.

Inputs

The models were run for continuous, non-buoyant gas releases with no terrain or building wake effects. That is equivalent to modelling a small or point source on a flat plain and tends to overestimate downwind concentrations relative to an area source. The following values were inputs to both models:

Wind speed	1 m/sec
Inversion base height	550 m
Release height	25 m
Release rate of PCB	6 kg/min
Duration of release	60 min.

Additional inputs for the AFTOX model were:

Air Temperature	25 °C
Wind direction	270° (toward the city of Oak Ridge)
Std Dev of wind dir.	5°
Cloud amount	0
Ground condition	wet
Roughness length	10 cm

The release rate and the duration of the release are based on the estimated burning rate of the PCB (600 kg/min), the estimated fraction of PCB that becomes soot (0.1), the estimated fraction of residual PCB on the soot (0.1), and the estimated duration of the fire (60 min) (see section L.3). The release height is an estimate based on a slightly buoyant plume. The actual plume from a fire is likely to be much higher, resulting in lower downwind concentrations at ground level. The use of a point-source model and the neglecting of terrain or building wake effects also introduces overestimates of concentration, especially close to the release point but these errors become negligible at large distances (greater than 1 km).

The ambient conditions (other inputs) lead to conservatively-high concentrations in air and occur occasionally in the Oak Ridge area. The Gaussian model was run for all stabilities (A through F) while a continuous stability parameter was calculated in the AFTOX model based on the additional inputs. The calculated stability parameter was 4.4 which is approximately equivalent to E stability. The use of the Briggs[10] open-country (rather than urban) dispersion coefficients in the Gaussian model, leads to less dispersion than would be expected for the rough terrain in the Oak Ridge area. The reduced dispersion leads to greater concentrations at large distances.

Results

The maximum concentrations of PCB in air (mg PCB/m^3 air) were calculated with the AFTOX model for each 15-minute time period for the first 4 hours after initiation of the fire. These results are given in Table L.4-1. The concentrations of PCB in air calculated with the Gaussian model are also given in Table L.4-1 for all six stabilities. The results show the models are reasonably consistent.

The concentrations of the combustion products were assumed to be in the same proportion as in the initial fire so that the concentration of PCDF is 0.027 times the PCB concentration, the factor for TCDF is 0.0026, the factor for PCDD is 0.00036, and the factor for TCDD is 0.0000034. The concentrations of the combustion products based on the AFTOX results are given in Table L.4-2.

The ground-surface concentrations of PCB and its combustion products were estimated from deposition rates. The ground-surface concentration at a given location is the product of the deposition rate times the

duration of the release (60 min). The concentrations of the combustion products based on the AFTOX results are given in Table L.4-3.

Distances from TSCA Facility

	km	Direction
Road - TN Sec. 327	0.3	N
Road TN Prim. 58	0.6	SE
Cemetery (Ellis)	0.9	NW
House (Nearest)	3.2	NW
House (EIS Max. Exp.)	4.0	SSW
City Bldg - Oak Ridge	14.0	NE

The principal region of interest in the consequence analysis is the City of Oak Ridge with a resident population of about 30,000 people. Closer locations of interest are the closest points on nearby roads (0.3 and 0.6 km), a cemetery (0.9 km), and the nearest residence (3.2 km).

Table L.4-1. Estimates of PCB Concentrations

Distance	Time[a]	Concentration, mg/m³						
			Gaussian, for Indicated Stability					
m	min	AFTOX	F	E	D	C	B	A
3.00E+02	15	9.0E+00	6.1E-05	2.2E+00	2.2E+01	2.4E+01	1.5E+01	7.5E+00
6.00E+02	30	1.4E+01	1.5E+00	1.6E+01	1.7E+01	9.4E+00	4.5E+00	2.0E+00
9.00E+02	60	1.1E+01	7.2E+00	1.5E+01	1.0E+01	4.7E+00	2.1E+00	9.2E-01
1.00E+03	75	8.9E+00	8.6E+00	1.3E+01	8.9E+00	3.9E+00	1.7E+00	7.5E-01
3.20E+03	105	2.3E+00	6.9E+00	3.4E+00	1.7E+00	5.2E-01	1.9E-01	8.1E-02
4.00E+03	120	1.6E+00	5.6E+00	2.6E+00	1.2E+00	3.6E-01	1.2E-01	5.3E-02
8.00E+03	180	6.5E-01	2.8E+00	1.2E+00	4.9E-01	1.2E-01	3.5E-02	1.5E-02
1.20E+04	240	3.8E-01	2.0E+00	8.0E-01	2.9E-01	6.9E-02	1.7E-02	7.5E-03
1.40E+04	270	3.1E-01	1.7E+00	6.9E-01	2.4E-01	5.6E-02	1.3E-02	5.7E-03

[a]Applies only to AFTOX results

Table L.4-2. Estimates of PCB Concentrations and Combustion Products

Distance	Time	Concentration, mg/m³				
m	min	PCB	PCDF	TCDF	PCDD	TCDD
3.00E+02	15	9.0E+00	2.4E-01	2.3E-02	3.2E-03	3.1E-05
6.00E+02	30	1.4E+01	3.9E-01	3.7E-02	5.2E-03	4.9E-05
9.00E+02	60	1.1E+01	2.9E-01	2.8E-02	3.9E-03	3.7E-05
1.00E+03	75	8.9E+00	2.4E-01	2.3E-02	3.2E-03	3.0E-05
3.20E+03	105	2.3E+00	6.2E-02	6.0E-03	8.3E-04	7.8E-06
4.00E+03	120	1.6E+00	4.4E-02	4.3E-03	5.9E-04	5.6E-06
8.00E+03	180	6.5E-01	1.8E-02	1.7E-03	2.3E-04	2.2E-06
1.20E+04	240	3.8E-01	1.0E-02	9.9E-04	1.4E-04	1.3E-06
1.40E+04	270	3.1E-01	8.4E-03	8.1E-04	1.1E-04	1.1E-06

Table L.4-3. Estimates of Ground-Surface Concentrations

Distance	Time	Concentration, mg/m³				
m	min	PCB	PCDF	TCDF	PCDD	TCDD
3.00E+02	15	3.2E+01	8.7E-01	8.4E-02	1.2E-02	1.1E-04
6.00E+02	30	5.2E+01	1.4E+00	1.3E-01	1.9E-02	1.8E-04
9.00E+02	60	3.9E+01	1.1E+00	1.0E-01	1.4E-02	1.3E-04
1.00E+03	75	3.2E+01	8.6E-01	8.3E-02	1.1E-02	1.1E-04
3.20E+03	105	8.3E+00	2.2E-01	2.2E-02	3.0E-03	2.8E-05
4.00E+03	120	5.9E+00	1.6E-01	1.5E-02	2.1E-03	2.0E-05
8.00E+03	180	2.3E+00	6.3E-02	6.1E-03	8.4E-04	8.0E-06
1.20E+04	240	1.4E+00	3.7E-02	3.6E-03	4.9E-04	4.7E-06
1.40E+04	270	1.1E+00	3.0E-02	2.9E-03	4.0E-04	3.8E-06

Uncertainties

There are a number of uncertainties in the above results but, because of the conservative nature of the models and their application, it is very unlikely that the actual concentrations in air or the ground-surface concentrations would be higher than these estimates. The uncertainty in the models is, at best, about 50 percent and is likely to be an order of magnitude or greater for the actual conditions. The uncertainty in the release estimates are equally large. However, these uncertainties are compensated by (1) using a release height that is much lower than the actual plume from a fire, (2) using ambient conditions which lead to conservatively-high concentrations in air, and (3) neglecting to adjust the concentrations due to plume depletion from ground deposition that occurs between the source and the location of interest.

L.5 Health Assessment

Assumptions and Setting

Effluent from the fire will be carried downwind to potential human receptors. These receptors may be close (less than 1 km) or distant (a few km or greater). Since the response time of the emergency response team is only a few minutes, evacuation and blockage of nearby roadways would almost surely occur during the early stages of a fire. Members of the public using these roadways will thereby have limited potential for exposure to the most dense parts of the plume. Emergency response personnel would be supplied with protective clothing and respiratory protection and would be adequately protected.

As the plume travels along the path directed by the prevailing wind, the relatively sooty particles on which the PCB and daughter products will be carried, will pass over and through vegetation. In addition to the natural settling of particles, the plume would experience considerable depletion by loss of the oily particles to the surfaces of vegetation. The present analysis, however, does not take credit for this depletion of the plume. Consequently, concentrations and effects will be overestimated.

In this accident scenario, the wind is assumed to blow continuously toward the populated area of the City of Oak Ridge for the duration of the fire and the plume passage. The closest distance from this populated area to the site is about 8 km. At this point, another major conservative (overestimating) assumption is made. The entire population, taken to be 30,000 people, is assumed to be located along the centerline of the plume. The centerline is the location of the maximum plume concentration. Plume concentration would normally decrease by a factor of between 1.5 and 2.5 on either side of a 22½° arc centered on the plume centerline.

As the plume passes the populated area, people will be assumed to be exposed via inhalation for the duration of the plume passage. At 8 km downwind from the fire and 1 m/sec wind speed, the duration could range from slightly more than 1 hour to several hours (taken to be 3 hours) depending on the exact atmospheric conditions. Over this duration, the centerline concentration, as a function of time, starts at zero, reaches a peak value equal to that in Table L.4-3, and then declines back to zero. The time integral of this function is required to provide an accurate accessment of exposure, but that would require a detailed knowledge of the time dependent meterology. However, to conservatively overestimate the effects, the average concentration was assumed to be equal to the value in Table L.4-3 over a 3-hour duration. In addition, the sooty particles carrying PCBs and its daughter products will adhere to skin, clothing, foliage, etc. Persons in the affected area will thus have additional potential for exposure beyond the time of plume passage. Such pathways as dermal contact with particles which would adhere to skin and clothing during the plume passage, resuspension of particles over a period of weeks to months available for additional inhalation and dermal contact as well as ingestion, represent possible routes for exposure to fire products at times well after the incident.

Given that there are potential routes of exposure, what are the possible effects of being exposed and what are factors associated with potential exposure beyond the time of the initial plume passage? To address these

components of the analysis, a summary of pertinent toxicological information is presented next, followed by a discussion of exposure pathways. Finally, a general discussion on risk assessment is presented followed by a presentation of risk estimates for the fire scenario.

Toxicity of Fire Effluent - PCBs

There are no known reports of death in humans as a result of inhalation exposure to PCBs. Inhalation of nearly saturated vapor of Aloclor 1242 in air (8.6 mg/m^3) for 7 hours per day, 5 days per week and a total of 24 days was not lethal to cats, rats, mice, rabbits or guinea pigs (Treon et al. 1956[11]). This exposure did not produce histological effects in the liver or other viscera. Thus, it is clear that, for the maximum capacity of the air to hold PCBs, it is essentially impossible to cause immediate or short term fatalities or degenerative lesions through the inhalation mode. Short-term inhalation studies of humans is lacking, however, long-term exposure of humans to levels of up to 11 mg/m^3 often result in a wide range of dermatological complaints.[12a,12b,14]. Some of these complaints could conceivably be present with short-term exposures.

Lethality has been induced in laboratory animals by the oral mode using a single dose. The lowest values identified are for rats and mink. The lowest values are 750 mg/kg for Aroclor 1221 in mink (Aulerich and Ringer 1977[12]) and 1,010 mg/kg for Aroclor 1254 in rats (Garthoff et al. 1981[13]). In addition, the Agency for Toxic Substances and Disease Control (ATSDR 1989) has identified a target organ no adverse effect level (NOAEL) for short-term (up to 14 days) exposures to PCBs. Target organ effects for short-term exposures are usually more sensitive than other endpoints since they focus on such sensitive measures as changes in enzyme levels rather than measures such as frank developmental effects. This short-term target organ NOAEL, obtained in feeding studies, is 0.025 mg/kg/day (ATSDR 1989) in laboratory animals. To account for unknowns in the extrapolation to humans, often a factor of 10 is used, leading to a "minimal risk level" of 0.0025 mg/kg/day (ATSDR 1989). Again, no similar measures are available for inhalation exposures.

Fischbein et al. (1979[14]) reported that 8-hour time-weighted-average (TWA) concentrations of PCBs in air resulting in skin effects and increased liver enzyme levels in occupationally exposed workers ranged from 0.07 to 11.0 mg/m^3. The NIOSH criteria document for occupational exposure to PCBs (NIOSH 1977[15]) suggest that in order to protect workers from liver injury, exposures should be maintained below 0.01 mg/m^3 (10 μg/m^3). However, based on the finding that PCBs are potential human carcinogens and the fact that both human and animal studies have failed to identify a dose level for chronic exposures that does not result in possible liver injury, NIOSH recommends that PCB levels be maintained at or below the minimally detectable level (identified to be 1 μg/m^3 at present).

Reflecting this more restrictive attitude regarding human exposure to carcinogens, the EPA has calculated a drinking water criterion for PCBs based on its potential for carcinogenicity. Utilizing the upper limit carcinogenic potency value (q_1^*) of 7.7 (mg/kg/d)$^{-1}$ for PCBs, the drinking water concentration associated with a risk level of 10^{-6} is 0.0045 μg/L (EPA 1987a[16]). (A risk level of 10^{-6} implies one excess cancer mortality in a population of one million persons exposed for a lifetime at the specified level of exposure.) If a human normally intakes 2 L of water daily, this concentration results in a daily PCB intake of 0.009 μg. Assuming equivalency of inhalational and oral absorption and a daily intake of 20 m^3 of air, then the ambient atmospheric concentration associated with a 10^{-6} risk level would be 0.00045 μg/m^3 (0.45 μg/m^3). The risk level of one per million is generally considered by the U.S. Environmental Protection Agency as adequately protective of human health. This amounts to 230 μg per lifetime based on the upper limit of EPA's potency estimate.

Toxicity of Fire Effluent - PCDD and TCDD

Polychlorinated dibenzo-p-dioxins (PCDDs) are a class of compounds that are produced as unwanted contaminants, particularly during the manufacture of chlorophenols and their derivatives, and as products of incomplete combustion during PCB incineration or accidental fires containing PCBs such as the one being analyzed. Of the 75 possible congeners, the 2,3,7,8-tetrachlorodibenzo-p-dioxin (2,3,7,8-TCDD) congener is the most toxic and is generally referred to colloquially as "dioxin." The other toxic congeners are the 1,2,3,7,8-pentachloro-, 1,2,3,6,7,8-hexachloro-, and 1,2,3,7,8,9-hexachlorodibenzo-p-dioxins (EPA, 1985b[17]).

No studies are available on the inhalation toxicity of 2,3,7,8-tetrachlorodibenzo-p-dioxin (TCDD). Further, there are no reports of death in humans as a result of oral exposure to TCDD. The only data available for use in evaluating acute or chronic toxicity resulting from PCDDs in incinerator emissions are based on either orally or dermally exposed animals. Of these, oral exposures have been shown to produce toxic effects at much lower levels than dermal exposures. Therefore, significant levels of exposure based on data from oral studies should be protective in terms of the potential for development of adverse effects following dermal exposures. Data has been collected from the Registry of Toxic Effects of Chemical Substances (RTECS) data base (Lewis and Sweet 1987[18]). This data appears in Table L.5-1. Lethal doses in laboratory animals varies from 0.5 to 3000 microgram per kilogram body weight.
Without using any of the many possible scaling factors, approximate lethal concentrations in air have been calculated for different times of exposure.

Table L.5-1. Lowest Lethal Doses of TCDD in Laboratory Assays

Route/species	µg/kg
ori-gpg	0.5
ori-dog	1
ori-mky	2
ori-rat	20
ipr-rat	60
skn-mus	80
ori-mus	114
ipr-mus	120
ipr-rbt	252
skn-rbt	275
ori-ham	1157
ipr-ham	3000
Median:	97 µg/kg
Interquartile range:	20-252 µg/kg
For reference:	
Sodium arsenate	10 mg/kg

Note: The interquartile range is used to define sensitive animal models.

Given a typical mammalian lethal dose of 97 µg/kg, the human equivalent would be 97 µg/kg x 70 kg = 6790 µg. Based on a 20 m^3/day breathing rate, a time weighted atmospheric concentration necessary to deliver the lethal dose can be estimated:

$$6790\ \mu g = 0.00023 m^3/s \ x \ \chi \left(\frac{\mu g - s}{m^3}\right)$$

and

$$\chi = 29 \frac{g - s}{m^3}.$$

Thus, an approximate lethal dose is attained by concentrations presented in Table L.5-2. The table indicates that a 1000 sec exposure would require the maximum vapor capacity of the air to result in a lethal dose of TCDD. Instead, according to data presented in section L.4, the highest concentration of TCDD is 0.03 $\mu g/m^3$, 200,000 times less than is required for the sensitive animal model. Short exposures during a fire even at the location of highest possible concentration are not anticipated to result in serious acute health consequences.

Table L.5-2. Estimates of Lethal Concentrations of TCDD in Air

Median population (g/m^3)	Sensitive population (g/m^3)	Time (sec)
29	6	1
2.9	0.6	10
0.29	0.06	100
0.029	0.006	1000

Evaluation of the potential for development of chronic effects due to prolonged exposure to PCDDs in incinerator emissions is, at present, based on the potential for carcinogenicity from exposure to 2,3,7,8-TCDD, the most toxic congener. From this perspective, EPA, Centers for Disease Control (CDC), and the Food and Drug Administration (FDA) have all calculated a "virtual safe dose" for 2,3,7,8-TCDD that corresponds to an excess cancer risk of 10^{-6}. The human intake levels determined to be a virtual safe dose by EPA, CDC, and FDA are 6.4, 27.6, and 57.2 fg/kg/day, respectively (a femtogram is 10^{-15} g). However, in response to concerns about the stringency of their risk estimate for 2,3,7,8-TCDD, EPA re-evaluated the carcinogenic risk from 2,3,7,8-TCDD using both threshold and nonthreshold models and chose a risk estimate (corresponding to a 10^{-6} risk) midway between the estimate generated by the two models (Gough 1988[19]). Their proposed new virtual safe dose is 100 fg/kg/d (EPA 1987b[20]). Based on a 70 kg average human body weight and a daily intake of 20 m^3 of air, 100 fg/kg/d would result from exposure to an atmospheric concentration of 3.5×10^{-7} $\mu g/m^3$. More recent epidemiologic evidence suggests that risks based on extremely high dose animal models may still be highly conservative (Fingerhut et al., 1991[21]).

Toxicity of Fire Effluent - PCDF and TCDF

The polychlorinated dibenzofurans (PCDFs) comprise a group of some 135 isomers with physical, chemical, and biological properties similar to dioxins. Buser et al. (1978[20]) found that pyrolysis of commercial

PCBs yields about 30 major and 30 minor PCDF isomers. A main constituent was found to be 2,3,7,8-TCDF, the most toxic of the PCDF congeners. Structure-activity relationships regarding toxic and biologic effects have been studied more extensively in dioxins than furans. Similar relationships exist, though, given that the 2,3,7,8-substituted congener of either PCDD or PCDF is the most toxic.

Additional insight into toxicity relationships among dioxins and furans may be gained through use of a technique developed by Jones et al. (1988[23]) that utilizes published toxicity data to derive an array of relative potency values characterizing the toxicity potential of a chemical or substance relative to a reference standard. Extensive data on non TCDD dioxins is not available, hence the potency of PCDD (except for 2,3,7,8-TCDD) is represented by the 1,2,3,7,8-pentachloro-dibenzo-p-dioxin. Lacking toxicological data on PCDF's they were all assumed to be as potent as the most toxic furan 2,3,7,8-TCDF. The RApid Screening of Hazard, or RASH, methodology has been well documented (Jones et al. 1985[24]; 1988[23]) and will not be discussed further here, with the exception of stating that RASH analysis indicates that the relative potencies of dioxins and furans are as presented in Table L.5-3:

Table L.5-3. Relative Potency of Congeners

Congener	Relative Potency
TCDD	1
PCDD	0.25
TCDF	0.05
PCDF	0.05

Based on Table L.5-3, the tetrachlorodibenzodioxins (TCDDs) are the most toxic congener, with the other dioxin congener groups characterized as being about one-fourth as toxic as the tetra isomers. The furans are seen to be about one-twentieth as toxic as TCDD. Therefore, levels of significant acute and chronic exposure to PCDFs may be established on the basis of their potency relative to that of TCDD, i.e., at a level twenty-fold higher than the levels established for TCDD.

Pathways for exposure

Assessment of the importance of the pathways for human exposures to fire products depends on many factors. Food plants can sorb materials on the surfaces of leaves and this can be consumed directly by humans or livestock animals, or the material may be translocated to other parts of the plant (which may be consumed by humans). Pollutants can also be deposited on the soil and taken up through the root system. The direct source of intake is through soil ingestion, and this may occur directly with humans, or more commonly, through foraging animals such as beef and dairy cattle, sheep, chickens, and hogs. Finally, materials can be transported to drinking water supplies and then to the aquatic food chain.

PCB and its products of incomplete combustion are highly lipophilic and have a low water solubility. Thus, direct uptake through drinking water supplies are of secondary interest. Drinking water for the City of Oak Ridge comes from Melton Hill Lake which is fed from Norris Lake. Because of the low water solubility and high binding capacity to organic materials in the soil, little direct leaching from soil deposited fire pollutants is expected. Because of the rapid water turnover in Melton Hill Lake, drinking water is not considered an important source of human exposure to toxic products of a PCB fire. Further, the source and distribution network can easily be subjected to evaluation for contaminants should a fire occur, and interdiction could be implemented if deemed necessary. For the same reasons, the aquatic food-chain pathways, while present, are considered to be of lesser immediate importance.

Resuspension of deposited material may take place by a variety of natural and human assisted means. Resuspension factors may range from 1 to 10% for materials which do not bind strongly to soils or other materials. The form and type of fire products, (i.e., sooty, oily particles which will carry unburned PCBs and products of incomplete combustion) will result in very little resuspension with respect to the initial air concentration within the plume. Such particles have a "stickiness" and a high degree of adherence to foliage and artificial surfaces, and because it is highly lipophilic, it strongly sorbs to soil. Further, Isensee and Jones (1971[25]) demonstrated that between 60 and 90% of TCDD applied to plant material remained for 21 days. As a consequence, resuspension is not considered to be an important contribution to this assessment.

An assessment of the risks to human health posed by fire contaminants present on or in soil requires an estimate of the likely soil ingestion rates. These ingestion rates have been reviewed recently by LaGoy (1987[26]). He derived average soil ingestion rates which range from 25 to 100 mg/day, depending on the age of the individual at risk. Maximum daily soil ingestion rates of 100 to 500 mg are not expected to underestimate exposure (LaGoy 1987). For the present assessment, the conservative value of 500 mg/day is used.

Clearly a variety of exposure pathways could be of importance in the event of a TSCA fire. The immediate pathway is that of inhalation. Dermal exposure is possible, but intervention through public notification and advice on skin cleaning will minimize this route of entry immediately post accident. Similarly, although the food chain pathway, as described above, is a major potential source of exposure, it is one which could be readily interdicted if warranted. In any case, because of the lipophilic nature of the fire effluent most of the PCB/TCDD/TCDF uptake via the terrestrial food chain is through the meat/dairy pathway (Beck et al. 1989[27]). Within the City of Oak Ridge, in which the target population for this assessment resides, there is little to no opportunity for contaminant transfer through the meat/dairy pathway. Consequently, the effects analysis will focus on the inhalation pathway and direct soil ingestion. But first, an introduction to risk assessment will be presented.

Risk Assessment and Application to Fire Scenario

Health risks of the fire scenario, as will be described below, are for chemical releases of the primary product, PCBs as well as products of incomplete conbustion, primarily the dioxins and furans. As discussed in Section L.2 of this Appendix, the event leading to the fire scenario has a low probability of occurrence, i.e., 4.2×10^{-3} per year. When a release to the environment is not a certainty, (an accident as compared to an expected release from normal operation), the DOE, the NRC and other agencies and scientific bodies consider that the appropriate metric for evaluation is obtained by combining event probability and event consequence. As stated in the DOE Order 5481.1B (10-10-90), "risk is a quantitative or qualitative expression of possible loss which considers both the probability that a hazard will cause harm and the consequence of that event." This concept has been considered fundamental to probabilistic risk assessment since its publication and use in the AEC's Reactor Safety Study (AEC 1974[31a]).

DOE Order 5481.1B requires that information in the accident analysis section be clear and convincing, and that all significant hazards have been thoroughly investigated and that associated risk has been properly evaluated. Further, concentrations of toxic materials are expected to be compared to levels that have been identified as safe or acceptable under accident conditions. Where DOE or regulatory agencies have not established acceptable levels, a value that is considered conservative should be used. In following the DOE order guidance, it is evident by the toxicological review presented above that specific levels have not been established for the accident situation under evaluation. However, guidance can be obtained on the basis of recent EPA proposed rule-making (EPA 1990[32]) wherein the EPA provided an insight into their thinking. The proposed rule-making would set an action level, for cleanup of a hazardous site, corresponding to a lifetime risk level of 1×10^{-6} for exposures to known and probable human carcinogens. The EPA concept is that acceptable lifetime risk lies between 10^{-4} and 10^{-6}. Further, in order to hold to a 10^{-4} lifetime cumulative risk from evnironmental exposures, the risk from individual pollutants should be maintained at 10^{-6} levels. The 1×10^{-6} level is consistent with EPA's thinking over the past decade. This proposed action level is designated

for a situation with on-going exposures, and not, as is the present case, for a potential for exposure. Similarly, the NRC Safety Goals suggests an annual latent cancer risk of 0.1% of natural cancers (interpreted as 2×10^{-6} per year and 10^{-4} per lifetime) (NRC 1986[33]).

Using the guidance value of 1×10^{-6} for exposures with a probability of unity, a corresponding level of concern can be developed for the accident under evaluation by considering that the probability for occurrence is 4.2×10^{-3} per year, not 1.0. Given that the incinerator operation may last 20 years, the health risk value to compare with the guidance value of 1×10^{-6} is determined as follows. Health Risk (probability for cancer induction) = calculated probability for health consequence from fire analysis x probability of the event occurring per year x number of years at risk. As an example of calculations to be presented, consider that the calculated lifetime cancer risk for a particular exposure scenario is 1×10^{-5} if the exposure event were to occur. For the case of the accident with an occurrence probability of $4.2 \times 10^{-3}\ y^{-1}$ and an operational lifetime of 20 y, the summary health risk is given by $1.0 \times 10^{-5} \times 4.2 \times 10^{-3}\ y^{-1} \times 20\ y = 8.4 \times 10^{-7}$. This summary health risk is a cumulative risk which includes a consideration of the health response from a postulated exposure, a consideration of the likelihood of the event occurring and a consideration of the duration for which the event could occur. A final consideration in the analysis to be presented is that the initial health consequence (1×10^{-5} in the above example) will be made up of a combined exposure to all fire products. As described in the preceeding text, fire products are discussed in terms of 5 main chemicals or chemical classes. Therefore, following the philosophy of accepting a risk of 10^{-6} per pollutant, the summary health risk in the above example could be broken down to 1.7×10^{-7} for each of the five classes of pollutants.

Estimates of Risk - Effects via Inhalation

On the basis of the above discussion, the relative carcinogenic potencies may be established as in Table L.5-4. Information can now be combined to provide a rough upper-limit estimate of long-term risk to persons from inhalation of fire pollutants. The principal region of interest is the City of Oak Ridge with a resident population of about 30,000 people. Closer locations of interest are the closest points on nearby roads (0.3 and 0.6 km), a cemetery (0.9 km), and the nearest residence (3.2 km). The roads and cemetery can be locations of only brief exposures to very few people because of enforced evacuation and thus do not pose any significant risk. The nearest residence may be a location for exposure to a few people for the duration of the incident if they are not evacuated. Evacuation of the City of Oak Ridge would be difficult and is therefore of primary interest. Taking concentrations at 8 km from section L.4 as representative for the entire 30,000 people within the City of Oak Ridge, concentrations of the plume constituents and their potencies are combined in Table L.5-5.

Table L.5-4. Relative Carcinogenic Potencies of PCB Fire Products

PCB	1
PCDF	64
TCDF	64
PCDD	320
TCDD	1300

Table L.5-5. Summary of Airborne Carcinogenic Potency of Fire Products Based on the Potency of PCBs

Constituent	PCB	PCDF	TCDF	PCDD	TCDD	TOTAL
$\mu g/m^3$	650	18	1.7	0.23	0.0022	
relative potency	1	64	64	320	1300	
potency times concentration (μg PCB equivalent/m^3)	650	1152	109	74	2.9	1988

With a 3 h exposure period, and an equivalent 1988 $\mu g/m^3$ concentration of PCBs, the equivalent exposure of 4970 μg of PCB is determined. The risk could be characterized as being $(4970/230) \times 10^{-6} \times 4.2 \times 10^{-3}\ y^{-1} \times 20\ y = 1.8 \times 10^{-6}$ or 1.8 per 1,000,000 persons exposed or much less than 1 per 30,000 population (the population of the city of Oak Ridge). As discussed above, this figure of 1.8×10^{-6} is estimated for the combined 5 chemicals or classes of chemicals rather than each class individually. If estimated per pollutant class, the risk from individual pollutant classes would be 1×10^{-6} or less.

The risk at other locations can be estimated in a similar manner. The evaluation is equivalent to multiplying the above risk by the ratio of the PCB concentration at the other location to the concentration at 8 km. Atmospheric concentrations as a function of distance are presented in Table L.4-2 above.

Given the fact that this calculation results from a long series of assumptions intended to overestimate consequences, it is concluded that potential latent cancer risks to humans from a PCB fire, as described in this SAR, is negligible. Further, the risks are within accepted guidelines developed by the EPA and the NRC.

Estimates of Risk - Effects via Soil Ingestion

At the 8 km distance, the PCB surface concentration was estimated, in section L.4 of this report, to be 2.3 mg/m^2. Local soil density in the Oak Ridge area is approximately 1.3 g/cm^3 (Luxmore, 1982[28]). Thus, with a 1 cm mixing zone, the concentration of PCBs in soil, available for direct ingestion is 1.8×10^{-7} g PCB/g soil. The soil ingestion rate of 500 mg/day for a 10 kg child, a daily uptake rate of PCBs is estimated to be 8.8×10^{-9} g PCB/kg-d. This rate of uptake is orders of magnitude below the lowest level observed to induce any type of acute biological change. With the conservative assumption that the PCB remains for 1 year, consequences of consuming soil would be well below the EPA's acceptable cancer risk of 10^{-6}. At the same location, the dioxins and furans are deposited in lesser concentrations and similar conclusions are drawn.

Maximally Exposed Individual

Using the present fire scenario, in order to evaluate potential exposures to the highest numbers of the persons, the wind is assumed to blow from the TSCA site toward the city of Oak Ridge (NE). With this assumption, the nearest resident to the TSCA would not be exposed to the plume. However, because an examination of the maximally exposed person or nearest resident is also of concern, hypothetical effects on the nearest resident are also discussed.

The nearest resident is approximately 3.2 km NW of the TSCA site. If the fire plume were to be in that direction, the atmospheric concentration of materials at 3.2 km would be about 3.5 times greater than concentrations at 8 km. Thus, potential health effects would increase by a factor of 3.5 above the effects

described in the previous subsection. This factor of 3.5 does not significantly change the conclusions of negligible effects in the previous subsection. Given the conservative (overestimating) nature of the assumptions leading to estimates of health risk, it is concluded that there would be negligible risk to the nearest resident from effects of the fire described in the scenario under evaluation.

L.6 Off-site Radiological Dose

The calculation for off-site radiological dose from the tank farm fire scenario was performed and documented using material in references 29, 30 and 31. The inputs and assumptions to the analysis are the same information presented in sections L.1 through L.4 with the following additional information.

Inputs/Assumptions

- Spill of 10,000 gallons of PCB contaminated liquid containing 800 ppm uranium at normal enrichment[30] (800 ppm U or less concentration in the bulk of the material)
- Volatility of uranium is no greater than PCBs (a conservative assumption)
- Uranium dispersion concentrations remain proportional to PCB concentrations
- Specific activity for uranium with normal ^{235}U assay is 0.72 μCi/gram
- Concentrations exists for 3 hours (conservative assumption see Section L.5)
- Inhalation Class Y uranium (conservative assumption)
- Normal breathing rate of 0.020 m^3/min or 1.2 m^3/hr
- Internal Committed Effective Dose Equivalent (CEDE) dose conversion factor for normal uranium = 1.25E+02 rem/μCi[31]

By using the results of section L.4 the concentrations and doses were calculated with the results presented in Table L.6-1.

Table L.6-1. Radiological Concentrations and Exposures

Time after fire begins (min)	Distance from fire (km)	Airborne Concentrations (on Soot) PCB $\mu g/m^3$	U $\mu g/m^3$	U $\mu Ci/m^3$
15	0.3	9000	11.08	7.98 E-6
30	0.6	14400	17.72	1.28 E-5
60	0.9	10900	13.42	9.66 E-6
75	1	8900	10.95	7.88 E-6
105	3.2	2300	2.83	2.04 E-6
120	4	1600	1.97	1.42 E-6
180	8	650	0.80	5.76 E-7
240	12	380	0.47	3.37 E-7
270	14	310	0.38	2.75 E-7

Conclusion

With the above assumptions, the maximum CEDE to an individual from uranium released from this accident scenario is calculated to be about 6 mrem at 0.6 km, 0.92 mrem at 3.2 km and 0.26 mrem at 8 km. Characterization of wastes which have been burned in the incinerator have shown that >95% of the airborne dose to the public from incineration of these wastes results from uranium. Therefore, the dose modeling for uranium above is deemed representative of the dose from all radionuclides. Inclusion of other radionuclides would not significantly alter the conclusion of this analysis. The risk from such an exposure would be negligible.[1]

L.7 References

1. Committee of the Biological Effects of Ionizing Radioation, "Health Effects of Exposure to Low Levels of Ionizing Radiation, BEIR-V", National Academy Press, Washington, D.C., 1990.

2. Gibson, S. B., "The Design of New Chemical Plants Using Hazards Analysis", Institution of Chemical Engineers Symposium Series No. 41, 1976.

3. UCRL-15910, Design and Evaluation Guidelines for Department of Energy Facilities Subjected to Natural Phenomena Hazards, June 1990.

4. Eschenroeder, A. Q., and Faeder, E. J., "A Monte Carlo Analysis of Health Risks for PCB-Contaminated Mineral Oil Transformer Fires," Risk Analysis, Vol. 8, No. 2, 1988 (pp. 291-297).

5. Chemical and Biological Investigations of a Transformer (Fire) Accident at Binghampton, N.Y.. Environmental Health Perspective, Vol. 60, pp. 201-209, 1985.

6. NIOSH Current Intelligence Bulletin 45, February 24, 1986, Polychlorinated Biphenyls (PCBs): Potential Health Hazards from Electrical Equipment Fires or Failures.

6a. TSCA Incinerator Tank Farm Fire, Memo from K. W. Dungan of Professional Loss Control, Inc., March 9, 1991.

6b. Pyrolysis and Combustion of Oils Contaminated with PCBs..., EPRI EL-5952, August 1988.

7. Kunkel, B.A. 1986. User's Guide to AFTOX (Air Force Toxic Chemical Dispersion Model). AFGL Technical Memorandum No. 132, US Air Force, AFGL/LYA, Hanscom AFB, MA.

8. Fleischer, M.T. 1980. SPILLS - An Evaporation/Air Dispersion Model for Chemical Spills on Land. PB 83109470, Shell Development Company, Westhollow Research Center, Houston, TX.

9. Randerson, D. 1984. Atmospheric Science and Power Production. DOE/TIC-27601, U.S. Department of Energy, Office of Energy Research, Washington, D.C.

10. Hanna, S.R., G.A. Briggs, and R.P. Hosker, Jr. 1982. Handbook on Atmospheric Diffusion. DOE/TIC-11223, U.S. Department of Energy, Office of Energy Research, Washington, D.C.

11. Treon JF, Cleveland FP, Cappel JW, Atchley RW, 1956. The toxicity of the vapours of Aroclor 1242 and Aroclor 1254. Am Ind Hyg Assoc Q 17:204-213.

12. Aulerick, R. J., and R. K. Ringer. 1977. Current status of PCB toxicity, including reproduction to mink. Arch. Environ. Contam. Toxicol. 6: 279.

12a. Fischbein, A., Wolff, M.S., Bernstein, Selikoff, I.J., 1982. Dermatological findings in capacitor manufacturing workers exposed to dielectric fluids containing polychlorinated biphenyls. Arch. Environ. Health 37:69-74.

12b. Ouw, H.K., Simpson, G.R. and Siyali, D.S. 1976. Use and health effects of Aroclor 1242, a polychlorinated biphenyl in an electrical industry. Arch. Environ. Health 31:189.

13. Garthoff, L. H., F. E. Cerra, and E. M. Marks. 1981. Blood chemistry alteration in rats after single and multiple gaveage administration of polychlorinated biphenyls. Toxicol. ppl. Pharmacol. 60(1): 33-44.

14. Fischbein, A., M. S. Wolff, R. Lillis, J. Thorton, and I. J. Selikoff. 1979. Clinical findings among PCB-exposed capacitor manufacturing workers. Ann. NY Acad. Sci. 320: 703-715.

15. National Institute for Occupational Safety and Health (NIOSH). 1977. Criteria for a recommended standard....occupational exposure to Polychlorinated Biphenyls (PCBs). U.S. DHEW. Public Health Service, September, 1977.

16. Environmental Protection Agency (EPA). 1987a. Drinking Water Criteria Document for Polychlorinated Biphenyls (PCBs). ECAO-CIN-414. Final Environmental Criteria and Assessment Office, Cincinnati, OH.

17. Environmental Protection Agency (EPA). 1985. Health Assessment Document for Polychlorinated Dibenzo-p-Dioxins. EPA/600/8-84/014F. Office of Health and Environmental Assessment, Washington, DC.

18. Lewis, R. L., and D. V. Sweet. 1987. Registry of toxic effects of chemical substances. National Institute for Occupational Safety and Health. U. S. Department of Health and Human Services, Cincinnati, OH.

19. Gough, M. 1988. Science policy choices and the estimation of cancer risk associated with exposure to TCDD. Risk Analysis 8(3): 337-342.

20. Environmental Protection Agency (EPA) 1987b. A cancer risk-specific dose estimate for 2,3,7,8-TCDD. Washington, D.C. (Draft typescript).

21. Fingerhut, M. A., et al. 1991. Cancer mortality in workers exposed to 2,3,7,8-Tetrachlorodibenzo-p-dioxin. New Eng. J. Med. 324(4): 212-218.

22. Buser, H. R., H. P. Borshardt, and C. Rappe. 1978. Formation of polychlorinated dibenzofurans (PCDFs) from the pyrolysis of PCBs. Chemosphere 7: 109-119.

23. Jones, T. D., P. J. Walsh, A. P. Watson, B. A. Owen, L. W. Barnthouse, and D. A. Sanders. 1988. Chemical scoring by a RApid Screening of Hazard (RASH) method. Risk Analysis 8(1): 99-118.

24. Jones, T. D., P. J. Walsh, and E. A. Zeighami. 1985. Permissible concentrations of chemicals in air and water derived from RTECS entries: a RASH chemical scoring system. Toxicol. and Ind. Health 1(4): 213-234.

25. Isensee, A. R. and G. E. Jones. 1971. Absorption and translocation of root and foliage applied 2,4-dichlorophenol, 2,7-dichlorodibenzo-p-dioxin and 2,3,7,8-tetrachlorodibenzo-p-dioxin. J. Agric. Food Chem. 19(6): 1210-1214.

26. LaGoy, P. K. 1987. Estimated soil ingestion rates for use in risk assessment. Risk Analysis 7(3): 355-359.

27. Beck, H., K. Echart, W. Mothar, and R. Wittowski. 1989. PCDD and PCDF body burdens from food intake in the Federal Republic of Germany. Chemosphere 181(1-6): 417-422.

28. Luxmore RJ. 1982, Physical Characteristics of the Southern Region: Fullerton and Sequoia Series. ORNL-5868, Oak Ridge National Laboratory, Oak Ridge, TN.

29. Rucker, T. L., "Analysis of Dose Contribution from Radionuclides contained in Trial Burn Waste", SAIC Document Number 1-143-03-541-00, June 1, 1990.

30. Letter, Kimmit to Rogers, April 17, 1990.SAIC Document Number 1-143-03-541-00, June 1, 1990.

31. DOE/EH-0071, "Internal Dose Conversion Factors for Calculation of Dose to the Public," July 1988.

31a. U.S. Atomic Energy Commission, "Reactor Saftey Study, An Assessment of Accident Risks in U.S.Commercial Nuclear Power Plants", WASH 1400, 1974.32.

32. EPA Draft proposed rule for corrective action for solid waste management units at hazardous waste management facilities. (EPA/OSW-FR-90-012) (55 FR 30798). 1990.

33. U.S. Nuclear Regulatory Commission, "Safety Goals for the operation of Nuclear Power Plants; Policy Statement", 10 CFR part 50, (51 Fr, Vol.51, No.149, Monday, August 4, 1986, pp28044-28049).