2353

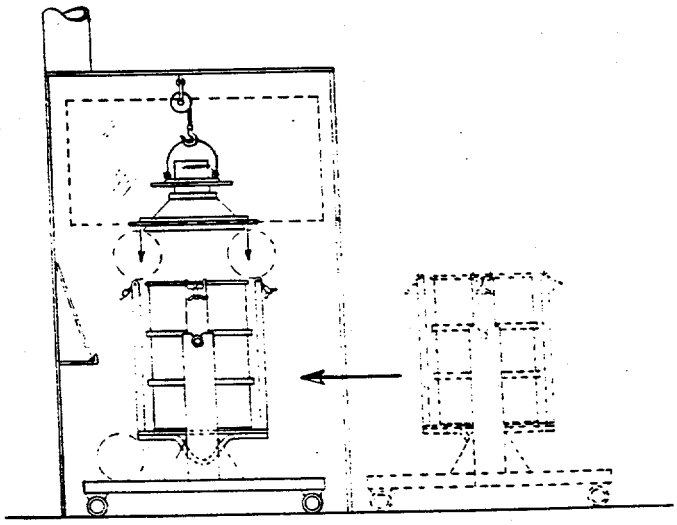

STEPS a and b

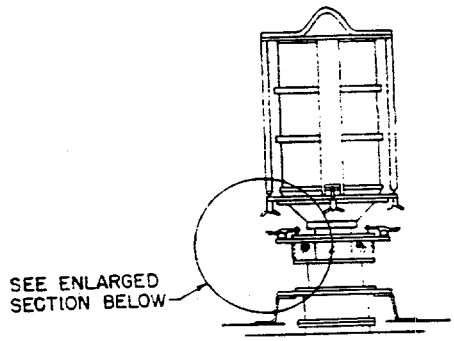

STEP f

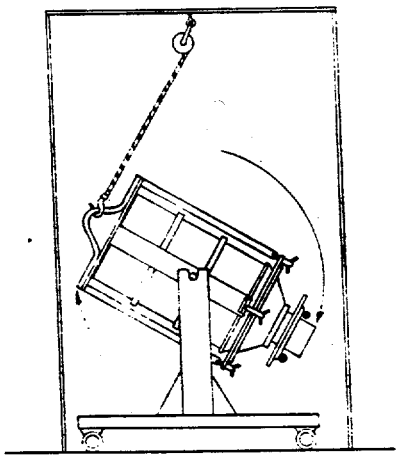

STEP c

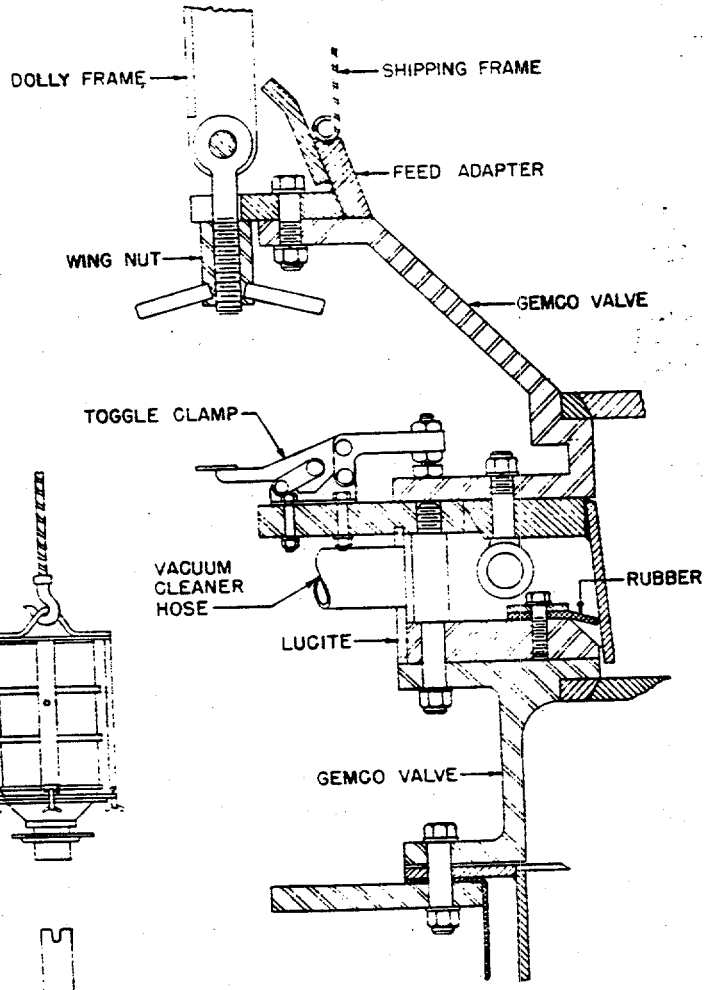

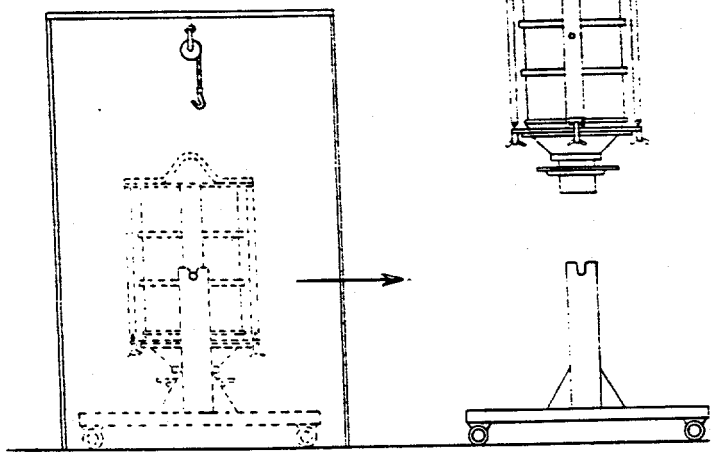

STEP d and e

FIGURE 31

CARBIDE AND CARBON CHEMICALS DIVISION K-25 ENGINEERING DEVELOPMENT DIVISION	
UO_2 TRANSFER SYSTEM	
ENGINEER: R.M. Vail	APPV'D BY:
DRAFTSMAN: R.T. Powell	DATE. 6-23-50
SCALE. NONE	DWG. NO. S-1313

SECRET
CONFIDENTIAL

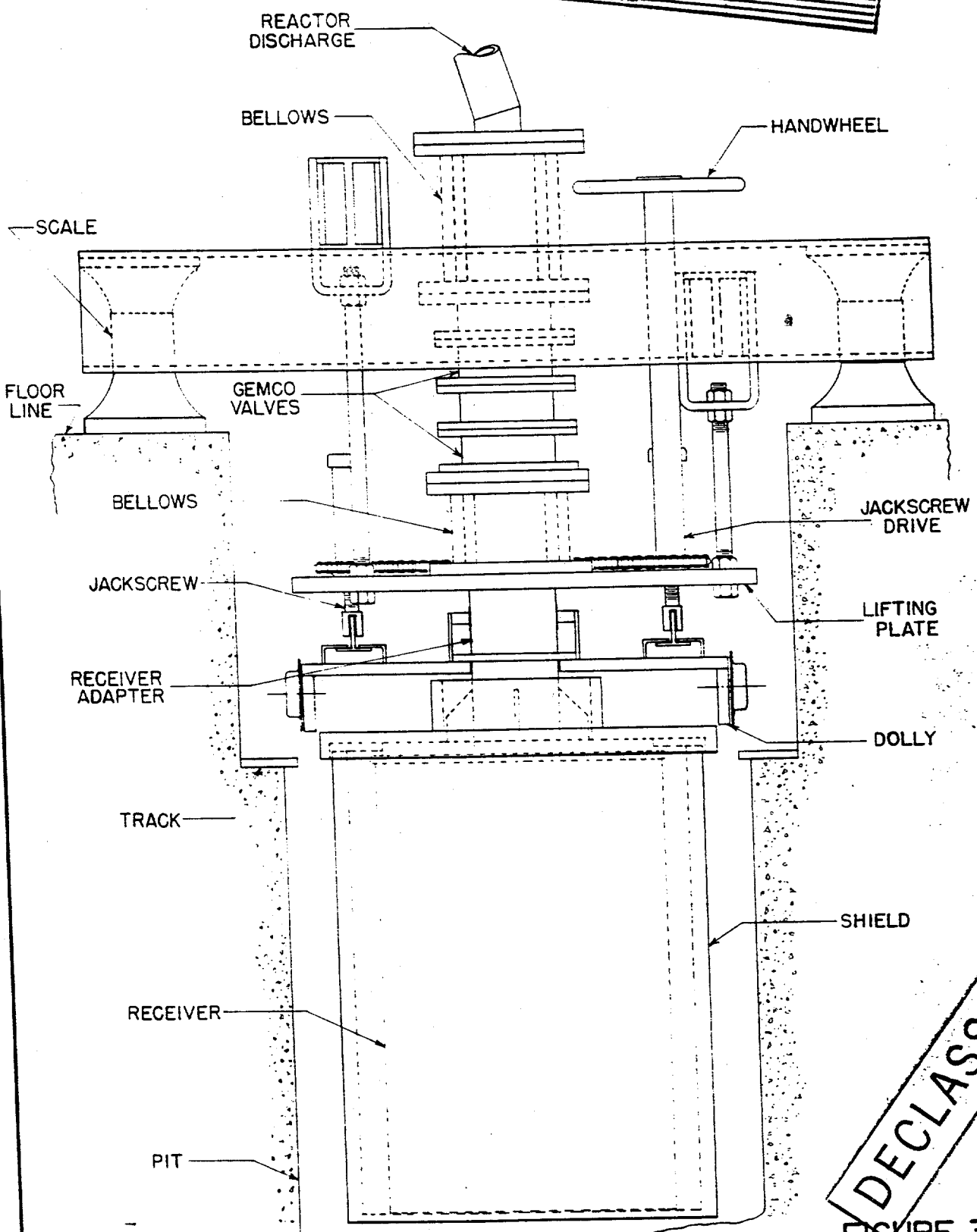

DECLASSIFIED

FIGURE 32

CARBIDE AND CARBON CHEMICALS DIVISION
K-25 ENGINEERING DEVELOPMENT DIVISION

CONFIDENTIAL

ASH RECEIVER ASSEMBLY

ENGINEER: K. M. Vail	APPV'D BY:
DRAFTSMAN: R. T. Powell	DATE: 6-23-50
SCALE: NONE	DWG. NO. S-1314

SECRET

2353