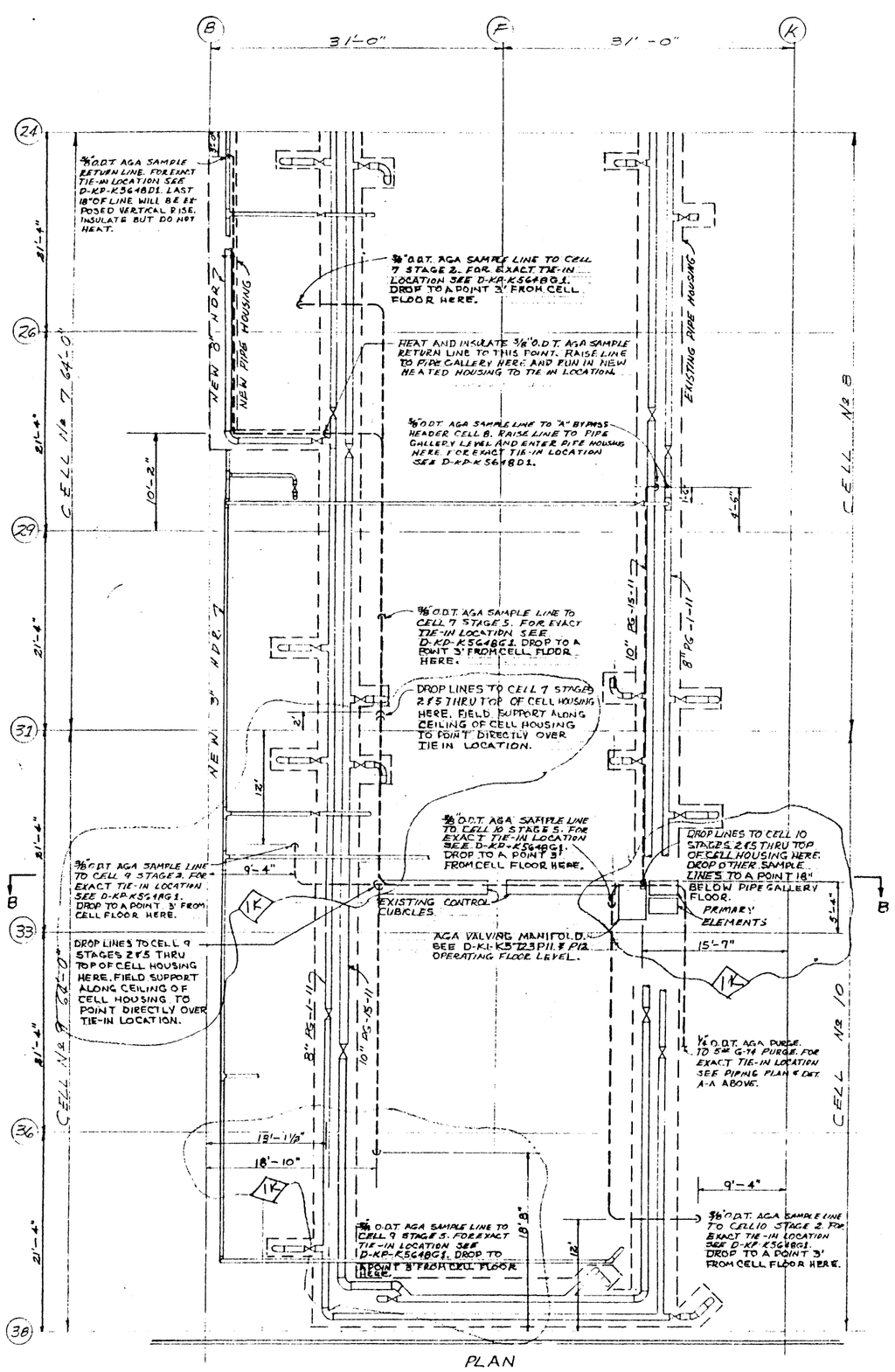

PLAN
AGA SAMPLE LINES
SCALE 1/8" = 1'-0"

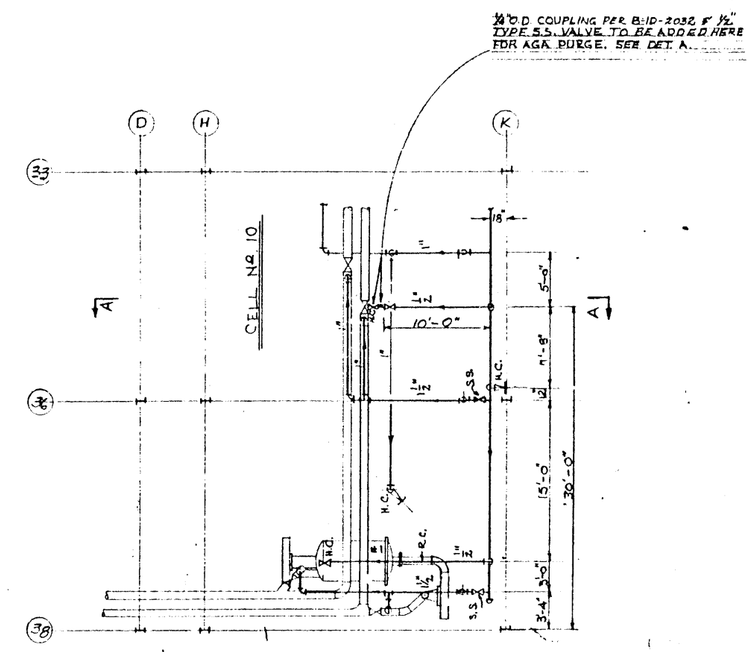

G-74 PURGE & BLEEDER PIPING —
PARTIAL PLAN - BLDG. K-311-1
1/8" = 1'-0"

— GENERAL NOTES —

1. ALL SAMPLE LINES TO BE HEATED TO 160°F & INSULATED.
2. FOR HEATING DETAILS SEE ELECT. DWG. D-KE-K707DAC.
3. ALL SAMPLE LINES TO BE 3/8" O.D. X .049" WALL PER M.S. 16.3.
4. RETURN LINE TO BE 3/8" O.D. X .049" WALL PER M.S. 16.3.
5. NITROGEN LINE TO BE 1/4" O.D. X .035" WALL PER M.S. 16.3.
6. SILVER SOLDER ALL CONNECTIONS PER ESP 4-3-105.
7. HELIUM LEAK TEST LINES FROM VALVING MANIFOLD. TOTAL INLEAKAGE TO BE LESS THAN 5 MICRON-CU.FT./HR. ANY SINGLE LEAK NOT TO EXCEED 0.1 MICRON-CU.FT./HR.

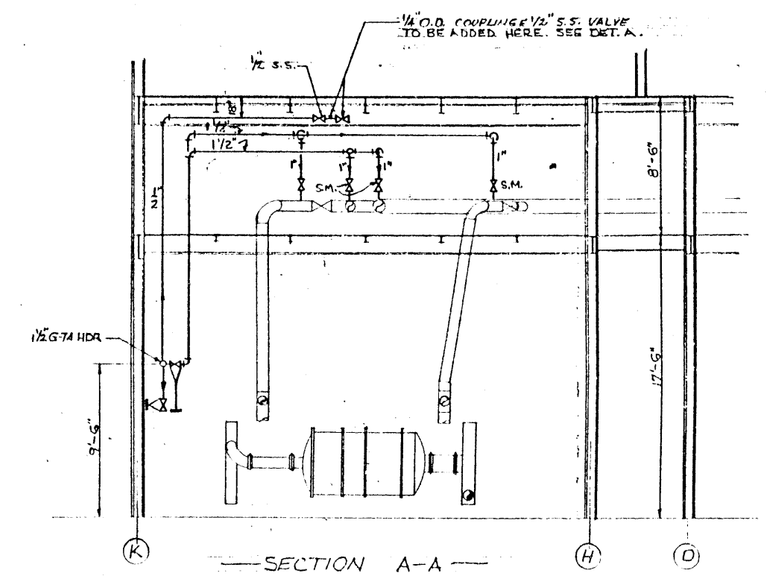

— SECTION A-A —
SCALE 3/16" = 1'-0"

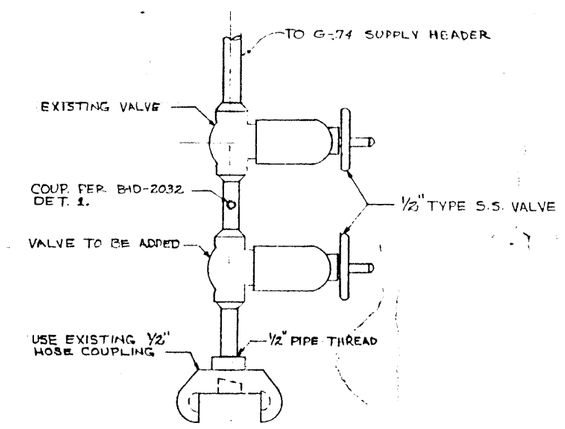

— DET. A —
DETAIL OF 1/2" HOSE CONN.
NO SCALE

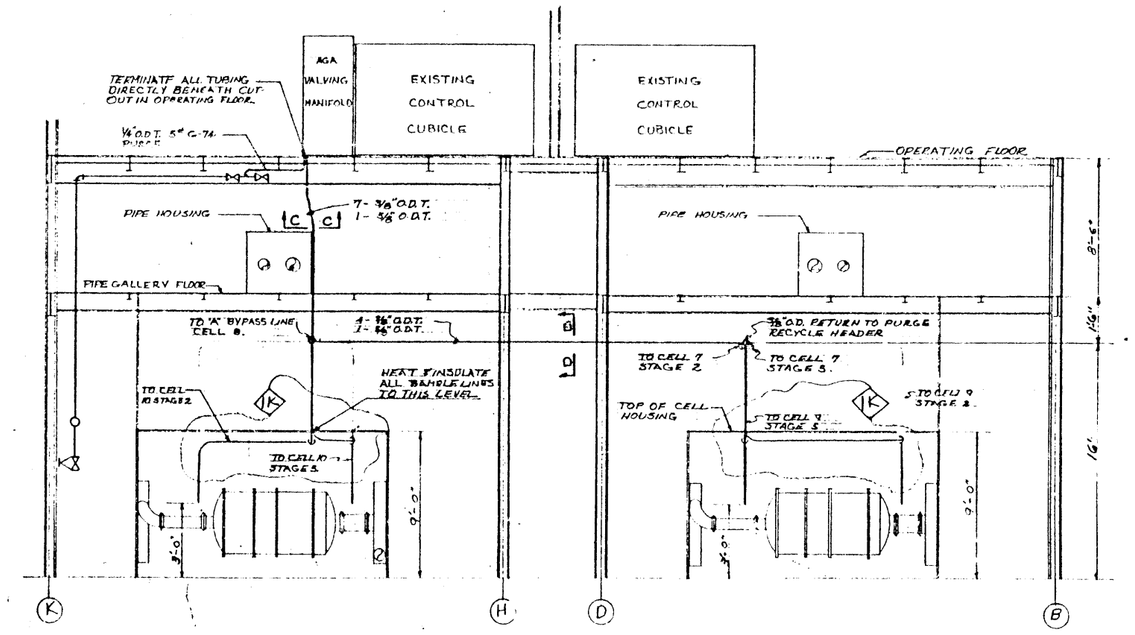

— SECTION B-B —
SCALE 3/16" = 1'-0"

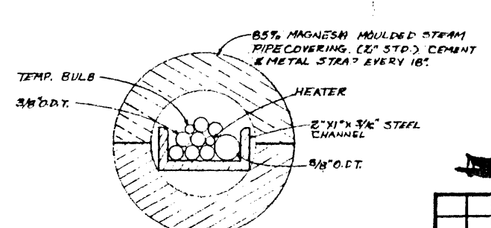

— SECTION C-C —
SCALE 1/2" = 1"

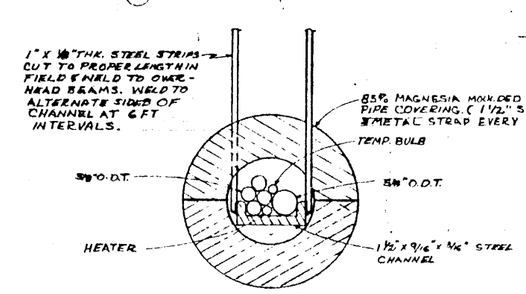

— SECTION D-D —
SCALE 1 1/2" = 1"

NOTE: FASTEN CHANNEL SECURELY AT OPERATING FLOOR & PIPE GALLERY FLOOR LEVELS.

This document has been approved for release to the public by:
Technical Information Officer
Oak Ridge K-25 Site
9/22/95
Date

4-13-54

3	68930	P	I	1	311-1	0
1	4 VNDR CODE 8	35	36. SUBJECT 44	PLANT	BLDG/LOC (8)	FLR
9	AGA TUBING RUNS. CODE TITLE					94

#23,207

REFERENCED D-KI-K5723P11 & P12; D-KP-K564801; D-KP-K564802; D-KP-K707DAC.

NO.	LT	DATE	APPD.	DATE	DESCRIPTION
1K	GS	3/94	RJM	3/94	RECOATED TUBING RUNS — ADDED DIMENSIONS

REVISIONS

TOLERANCES: ± 1/16" ON ALL FRACTIONAL DIMENSIONS UNLESS OTHERWISE SPECIFIED. DECIMAL DIMENSIONS WITH NO TOLERANCE GIVEN TO BE FILLED TO 5 DEC. FINISH ALL SURFACES TO SIMILAR FINISH IN ACCORDANCE WITH S.A. 125-2

R.E.S. NO. | C.R. NO. | B.M. NO. 5591-43 | ACCT. CHG. | W.O. NO. 590569

APPROVAL: DRAWN BY GS; CHECKED BY TOM; DEPT. RM; OPER.; P.E.D. Jack D. Pike

SCALE NOTED | DATE 3/7/54 | 3/9/54 | 3/9/54 | 4/4/54

CARBIDE AND CARBON CHEMICALS COMPANY
A DIVISION OF UNION CARBIDE AND CARBON CORPORATION
K-25 PLANT

K-311-1 SIDE PURGE - AGA TUBING RUNS

BLDG. NO. K-311-1 | LOCATION K-25

D-KI-K5723P14 Rev 2

REV. NO.	E & A	MECH.	P.E.	INST.	MACH.	REV. NO.	E & A	MECH.	ELEC.	INST.	MACH.
1K	X	X	X	X	X	0	2-5-54	X	4-7-54	X	X