ChemRisk/Shonka Research Associates, Inc., Document Request Form

(This section to be completed by subcontractor requesting document)

J. Lamb / K-1034A

Requestor — Document Center (is requested to provide the following document)

Date of request 6/20/95 Expected receipt of document 7/15/95

Document number A.4162 Date of document 4/19/47

Title and author (if document is unnumbered)

(This section to be completed by Document Center)

Date request received 6/27/95

Date submitted to ADC 6/30/95

Date submitted to HSA Coordinator 6/27/95

(This section to be completed by HSA Coordinator)

Date submitted to CICO 6/30/95 7/20/95

Date received from CICO 7/20/95

Date submitted to ChemRisk/Shonka and DOE 7-27-95

(This section to be completed by ChemRisk/Shonka Research Associates, Inc.)

Date document received

Signature

ChemRisk Document No. 2113

UNCLASSIFIED

~~CONFIDENTIAL~~

~~This document consists of 14 pages~~ 4 Atts
~~No. 18 of 36 copies, Series A~~

Approved for issue by: C. K. Beck
Date of issue: April 19, 1947

Report number A-4162
File number

Carbide and Carbon Chemicals Corporation Operating Contractor for the U.S. Atomic Energy Commission.

INVENTORIED
AUG 16 1951
By SR

CLINTON ENGINEER WORKS

CARBIDE AND CARBON CHEMICALS CORPORATION
Research and Development Laboratories...

RECOVERY OF C-2144

H. A. Bernhardt, B. J. Massey, J. G. Schaffner, E. Staple, E. A. Wiggin.

Plant Records Department Vault
Doc. No.
Serial No.
File No. 021

This document has been approved for release to the public by:
Technical Information Officer
Oak Ridge K-25 Site
Date 7/21/95

DISTRIBUTION LIST

cy: 1. Barnett, S. C.
2. Beck, C. K.
3. Bernhardt, H. A.
4. Callihan, A. D.
5. Center, C. E.
6-7. Cook, R. W.
8-9. Cromer, S.
10. Felbeck, G. T.
11. Gabbard, J. L.
12. Huber, A. P.
cy: 13-14. Hurd, F. W.
15. Lavender, R. A.
16-19. Library
20-30. Peterson, A. V.
31-32. Plant Records Dept.
33. Rucker, C. N.
34. Vanstrum, P. R
35. Williams, W.
36. Wiswall, R. H.

UNCLASSIFIED
Classification changed to: (Name and category)
ADOE ADD signature (first reviewer) Date 7/19/95
ADOE signature (final reviewer) Date 7/19/95

~~This document contains information affecting the National Defense of the United States within the meaning of the Espionage Act, U. S. C. 50: 31 and 32. Its transmission or the revelation of its contents in any manner to an unauthorized person is prohibited by law.~~

— DECLASSIFIED —
A-4162
by authority of: JD MCGAUGH JR 7/19/95
CS-PGD-4 Classification Specialist (K-25)
(Authorized Declassifier's name and organization)
or
(Official declass. notice memo, TIC notice, etc.) 7/20/95
Person making change (date) 7/20/95
(Document identification verified by)

~~CONFIDENTIAL~~

CLASSIFICATION CHANGED TO Confidential
Unprocessed
By authority of ~~RH Laffoty 10-26-55~~
By ~~AA Shaver~~ Date ~~11-22-55~~

UNCLASSIFIED

CONFIDENTIAL

Report number: A-4162
File number:
Date of issue: April 19, 1947

Title: Recovery of C-2144
Authors: H. A. Bernhardt
B. J. Massey
J. G. Schaffner
E. Staple
E. A. Wiggin

CLINTON ENGINEER WORKS

CARBIDE AND CARBON CHEMICALS CORPORATION
Research Laboratories
Research and Development Department

ABSTRACT

C-2144, used as a lubricant in the circulation pumps in the cascade stream, becomes contaminated after extended periods of use. For purposes of economy, a method for reclaiming pure C-2144 was needed. Reclamation by distillation, one of several methods suggested, is considered here. The necessary supplementary operations of water extraction, clarification, stripping and carbon tetrachloride extraction are also discussed. In each case specific details concerning design of equipment, operation, and results are given. With this method it has been possible to recover approximately eighty percent of an original charge of contaminated sludge as useable C-2144 that meets standard plant specifications.

CONFIDENTIAL

RECOVERY OF C-2144

H. A. Bernhardt, B. J. Massey, J. G. Schaffner, E. Staple,
E. A. Wiggin

Introduction

This report is concerned with a method for the recovery of C-2144 for reuse in the K-25 Gaseous Diffusion Plant.

After C-2144 has been used in the plant's pumps, it becomes a viscous sludge. This results from the "cracking" of the C-2144 and from the presence of impurities, notably uranium compounds. Various other impurities are also introduced in the process of removing C-2144 from the pumps.

Development of Method

Some work had been done on recovery in connection with studies made on the decomposition of C-2144 and other substances in the presence of C-216 at elevated temperatures. This work was carried out by Sgts. Schneider and Massey at Ford Bacon and Davis between November 15, 1944, and January 15, 1945.

A description of the subsequent development may be separated into five unit operations:

1. Water extraction
2. Clarification
3. Stripping
4. Distillation
5. Carbon tetrachloride extraction

1. Water Extraction

The C-2144 sludge after removal from the pumps contains both hexavalent and reduced uranium compounds. The hexavalent uranium is removed by water extraction. It is found that by heating the sludge and water to a temperature of about 70° C. the water layer separates easily and can be decanted, leaving the C-2144 practically water free.

2. Clarification

Attempts were made to separate the solids formed by decomposition and those introduced by improper handling. These solids contain some reduced uranium. The nature of the suspended solids precludes the possibility of an efficient filtration. Microscopic examination of the sludge reveals the presence of small flake-like particles, ranging in size from sub-microscopic to 4 microns in diameter. These particles seal the filter medium and effectively stop filtration.

CONFIDENTIAL

In order to achieve efficient filtration, it is necessary to use such a quantity of diluent (C-714 or Freon-113) that this method becomes unfeasible. The use of diatomaceous earth as a filter-aid does not markedly improve the rate of filtration and absorbs appreciable amounts of C-2144 and C-714.

A Sharples super-centrifuge, having a bowl 1-3/4" I.D., operating at 25,000 to 28,000 r.p.m., was also used in an attempt to clarify the sludge. Three runs were made on different dilutions of sludge, C-714 and Freon-113 being used as diluents; the most dilute of the solutions being 1 part sludge to 4 parts C-714. In all instances no clarification was apparent and an appreciable quantity of C-714 was lost by volatilization. However, since the C-2144 sludge contains impurities which are both lighter and heavier than the C-2144, centrifugal separation can not be accomplished.

Use of an adsorbent for clarification gave good results although, it was spent too quickly to be practical. Alumina, silica gel, and activated carbon were used separately and in mixtures. Alumina gave the best results, but it was spent after passing through it less than an equal volume of sludge and C-714.

It was noted that samples which had been left undisturbed for several days became clear; the impurities separated to the top and bottom leaving a clear layer of C-2144 and diluent. Separation rates were found to vary with viscosity, the less viscous solutions settling more rapidly. A sample of C-2144 - C-714 (1:1) required four days, and another sample of C-2144 Freon-113 (1:2) required eight hours to clarify. The reduced uranium compounds, which exist in the solid state, settle to the bottom of the container, leaving a clear C-2144 (middle) layer. This method of clarification was adopted.

3. Stripping

The removal by distillation of the diluent used in clarifying was subsequently found troublesome because of foaming. This condition was minimized by using a separate column designed to allow adequate free space for foaming. This column operating continuously attained maximum efficiency using a clean dry air sweep and gave a product which was relatively free from C-714.

4. Distillation

The first distillations were made in glass systems using small charges. In these distillations a standard distillation flask was used, and no attempt was made to separate the C-2144 into fractions although it was noted that fractionation would be desirable. The data from these runs are given in Table I. The quality of the distillates is measured by an "inertness factor". In determining "inertness", C-2144 is exposed to C-616 for three hours at 99° C. and the amount of reduced uranium after exposure is analytically determined. The "inertness factor" is then computed by dividing the weight of the reduced uranium by the weight of the C-2144 sample; therefore, the greater the "inertness", the lower the "inertness factor". The "inertness factor" for the first run was slightly lower than for the second, probably due to the lower operating pressure in the first. From the data obtained in these distillations, a metal still was designed.

TABLE I

DISTILLATIONS IN GLASS EQUIPMENT

Distillation 1

Time (hrs.& Mins.)	Vapor Temperature °C.	Pressure mm. of Hg.	Remarks
0:00	——	2.4	Heat on
0:05	120	2.4	Fogging due to decomposition.
0:13	155	1.7	C-2144 distilling.
0:20	157	1.5	About 10% over
0:25	162	1.5	——
0:35	171	1.5	Less fogging
0:45	176	1.5	About 50% over.
0:50	176	1.6	Darker color C-2144 coming over
1:00	180	1.5	——
1:08	184	1.5	Shut down, about 25% left in still pot.

NOTE: "Inertness factor" for distillate 2.86%

CONFIDENTIAL

Distillation 2

Time (hrs.& Mins.)	Vapor Temperature °C.	Pressure mm. of Hg.	Remarks
0:00	——	3.0	Heat on
0:05	28	2.8	Fogging
0:15	121	2.8	C-2144 distilling, still fogging.
0:18	130	2.7	C-2144 clearing.
0:25	144	2.5	Approximately 20% over.
0:31	155	2.2	Approximately 35% over.
0:34	162	2.2	Approximately 50% over, C-2144 very clear.
0:39	168	2.1	Approximately 65% over.
0:45	170	2.0	Approximately 75% over.
0:50	180	2.1	Approximately 80% over.
0:57	180	2.0	Shut down, about 15% left in boiler.

NOTE: "Inertness factor" for distillate 3.01%.

5. Carbon Tetrachloride Extraction

The "inertness factor" of C-2144 recovered by distillation is higher than is permitted by plant specifications. This is probably caused by the presence of a compound which boils at approximately the same temperature as C-2144 or a compound formed by decomposition since it is noted that HF is evolved during the distillation. An extraction was made using CCl_4 in an attempt to remove this reactive component from the distillate. This improved the quality of the product and as the method of extraction was further improved, the "inertness factor" was reduced to a value lower than that specified.

The elimination of the reactive components could be due to the extraction itself or to some other operation in the extraction process. Both of the following possibilities were considered: (1) Aeration of the extracted C-2144 to free it from CCl_4, (2) Ageing of the C-2144 since all the CCl_4 extractions were made on products which had aged for a considerable time. These possibilities were investigated and it was proven that the CCl_4 extraction improved the inertness. (See Table II.)

TABLE II

EXPERIMENT ON AGEING AND AERATION

	Treatment	"Inertness factor"*
Cut #2	As distilled	0.90%
Cut #2	After standing one month	0.78
Cut #2	After standing five weeks	0.80
Cut #2	Aerated 24 hours at 60° C.	0.78
Cut #2	Aerated 48 hours at 60° C.	0.80
Cut #2	Aerated 96 hours at 60° C.	0.81
Cut #3	As distilled	0.60
Cut #3	After standing one month	0.55

It should be noted in all instances that initial ageing of the freshly distilled C-2144 caused some reduction in its reactive component. The magnitude of this effect was approximately 0.1%, and aeration of the aged samples produced no further improvement.

* "Inertness factor" values should not be considered reliable beyond the first significant figure.

Apparatus

The final apparatus used for the five unit operations mentioned in the preceding section are discussed below:

1. Water Extraction

The laboratory equipment consists of a hot plate, beaker and agitator. A separatory funnel is used to make a close separation of the layers.

2. Clarification

This equipment consists of a glass jug equipped with a glass siphon arrangement for the purpose of withdrawing the clear layer of C-2144. (See figure 1)

3. Stripping

This equipment consists of a glass tube 1-1/3" i.d. x 4' long around which is spirally wound nichrome ribbon. (See figure 2) Rubber stoppers are inserted in the top and bottom of the tube which is mounted at an angle of about 45°. The top stopper is bored for the vapor take-off and the liquid feed, and the bottom stopper is bored for the liquid take-off, the air inlet, and a thermometer. The heat on the column is controlled by a variable transformer and in normal operation 0.64 K.W. are used. A maximum of 4 gallons of a C-2144 - C-714 (1:2) mixture can be stripped in 8 hours.

4. Distillation

A monel still was made with the following specifications: (See figures 3 and 4)

Capacity of boiler	6 gallons
Volume of receivers	2 receivers of 3 gallons each
Size of column	4" i.d. x 3'
Packing of column	3' of 1/2" ceramic Berl saddles
Design pressures	1 mm. Hg. at receivers 2 mm. Hg. at boiler
Design reflux ratio	2 to 1
Velocity of vapor through column	5,800 ft./min.
Capacity of still	5 gallons/day

Although the still was designed to have a pressure drop of 1 mm. Hg. across the column, in practice it was found to be slightly higher than this due probably to the fact, that in computing the velocity through the column the presence of gaseous decomposition products such as CF_4, HF, etc., was not taken into consideration. Since these compounds have small molecular weights their volumes when present even in small amounts would be large compared to the volume of gaseous C-2144.

A barostat is used to maintain the pressure on the receivers at 1 mm ± 0.1 mm. Hg. This pressure is attained with 2 Welch Duo-seal vacuum pumps operating in parallel.

The heating element of the boiler is a 2 K.W. 220 volt immersion heater. A 220 volt 2 K.V.A. variable transformer is wired for 110 volt input and 235 volt maximum output to control this heater. The column is heated by a spirally wound nichrome ribbon to insure adiabatic operation. The input is controlled by a 110 volt 5 ampere variable transformer. The boiler, column and header are insulated with 1-1/2" magnesia insulation which extends to the condenser.

To compensate for the viscous nature of C-2144 all valves and pipes are oversize. The bottom of the boiler is equipped with a blind flange to facilitate withdrawal of the extremely thick residue.

Temperatures are measured by a thermometer in an oil-filled well in the boiler and by an Iron-Constantan thermocouple silver-soldered to the header midway between the column and the condenser.

5. Carbon Tetrachloride extraction

This apparatus as used in the laboratory consists of a hot plate, a beaker, an agitator, a thermo-regulating device and a source of clean, dry air. As in the case of the water extractions, a separatory funnel is used to effect a clean separation of the two layers.

Operation

The contaminated C-2144 is strained through 20 mesh wire cloth which removes the large particles such as metal chips, gaskets, etc. Then to each liter of C-2144 250 ml. of tap water are added. The mixture is heated to about 75° C. and agitated at that temperature for 15 minutes. The mixture is then allowed to stand undisturbed until the layers have separated. The water layer is decanted; final separation is made with a separatory funnel. The water layer from this extraction is retained for uranium recovery.

The C-2144 layer is transferred to the clarifier . To each liter of extracted C-2144, 2 liters of C-714 or Freon-113 are added and the mixture vigorously agitated for approximately 15 minutes. It is then allowed to stand until impurities have separated to the top and bottom. A clear layer of C-2144 and diluent is left in the middle of the vessel. This clear layer is withdrawn for the stripping operation.

The clarified solution of C-2144 and C-714 is allowed to run down the stripping column in a steady stream. The heat input to the column is so regulated that the C-2144 in the bottom of the column is at a temperature of not less than 110° C. nor greater than 125° C. The concentrated C-2144 is drawn off at the bottom of the column continuously. The low boiling constituents are vaporized, swept from the column by the admission of air at the bottom and collected in a water cooled condenser. This material is set aside for reuse as diluent.

The concentrated C-2144, now relatively free of C-714 or Freon-113 is transferred to the still and heated to 110° C. at atmospheric pressure. The pressure is slowly decreased to 1 mm. Hg. while maintaining the same temperature and is held at this value throughout the distillation.

Before taking the first fraction, the still is operated at full reflux for approximately 15 minutes. The reflux is gradually reduced to 1:1 ratio for 30 minutes, then decreased again to 1:5 and held at this ratio for the remainder of the run. The still can be more easily operated if the condensed C-2144 is warm. (35- 45° C.) (See Table IV)

To one liter of distilled C-2144, one liter of CCl_4 is added. The mixture is heated to 60° C. and agitated for one hour. Agitation is stopped and the C-2144 allowed to cool to room temperature. The CCl_4 layer is then decanted. This is repeated with fresh CCl_4 three times. After the CCl_4 layer is decanted the fourth time, the C-2144 layer is heated to 70° C. and clean, dry air is blown across the surface while it is being agitated. This is continued for about four hours; then the air flow is stopped, the heat and agitation discontinued and the solution allowed to stand for 16 to 20 hours. The solution is again aerated at 70° C. for about four hours.

Results

Two runs were made in the metal still. In both cases it was charged with stripped clarified sludge. About 80% by volume of the original sludge was recovered as useable C-2144.

Although the stripping process removed nearly all the C-714, enough was left to give trouble by "hanging-up" in the column. About 500 c.c. of C-714 were held in the column despite the fact that the column and boiler were at a temperature of 100° C. It was necesaary to withdraw this with the pumps, thereby endangering their rotors.

Preliminary investigations indicated that the rate of thermal decomposition taking place during distillation was a function of time and temperature. Therefore, at times it was desirable to take more product than was indicated by the design reflux rate in order to remove the recovered C-2144 from the boiler and column. It was found that after the still had come to the range (150° C. to 155° C.), the reflux rate could be cut to 1:5 increasing the yield without greatly affecting the quality of the recovered C-2144.

A summary of the analyses of the distilled products is given in Table V.

It is of interest that the "inertness factor" averaged 0.5% higher in the first run than in the second. This was probably due to impurities in the still which were flushed out in the first distillation.

Most of the impurities causing a high "inertness factor" were distilled and collected in the first fraction. By careful operation, the "inertness factor" of the untreated C-2144 fraction (131° C. - 160° C.) could be kept to a maximum of 0.7%.

A summary of the analytical data on the treated distillates is given in Table VI.

It was found that the presence of even small amounts of CCl_4 in the purified C-2144 raised the "inertness factor" and the vapor pressure. The last traces of CCl_4 were difficult to remove. It was found that by drying the purified C-2144 for about four hours at a temperature of 70° C. and allowing it to stand overnight, it was possible to completely dry it in an additional four hours of heating. It was also found necessary to use chemically pure CCl_4 in the extraction.

Recommendations.

This report is concerned only with the possibility of recovery of C-2144 by distillation; it may be possible to recover it by chemical means.

Summary

It was possible to recover the greater part of the sludge taken from the pumps as usable C-2144 with a purity well within plant specifications, by fractional distillation under reduced pressure.

TABLE IV

DISTILLATIONS IN METAL STILL

First Run

Time Hrs.,Min.	Boiler Temp. °C.	Boiler Voltage	Header Temp. °C.	Column Voltage	Pressure mm. Hg.	Remarks
0:00	23	—	—	—	—	Start heat on.
2:05	100	183	40	60	760	Freon-113 coming over.
2:25	112	183	41	60	100	Low boiling compounds over-first fraction.
4:00	161	183	55	65	1	
4:25	165	165	81	60	1	First drop of C-2144 distillate, total reflux.
4:30	165	183	102	70	1	Reflux ratio 1:1 fairly large stream coming over.
5:05	165	183	107	80	1	None
5:38	171	183	129	80	1	Second fraction reflux ratio decreased to 1:2.
6:25	179	183	141	80	1	Reflux ratio decreased to 1:3.
7:15	189	183	155	80	1	Third fraction shut down.

Charge: 6 liters of stripped clarified C-2144.

CONFIDENTIAL

TABLE IV

DISTILLATIONS IN METAL STILL

Second Run

Time hrs.,Min.	Boiler Temp. °C.	Boiler Voltage	Header Temp. °C.	Column Voltage	Pressure mm. Hg.	Remarks
0:00	25	—	—	—	760	Start heat on.
2:30	172	220	99	75	1	First drop distillate- total reflux for 10 min., then ratio changed to 1:2.
3:15	181	220	133	75	1	First fraction about 1 liter.
5:10	202	220	159	85	1	Shut down to clean vacuum pump.
0:00	25	—	—	—	—	Started.
2:15	204	220	157	80	1	First drop distillate - total reflux for 10 min., then ratio changed to 1:2.
4:00	218	220	158	80	1	No reflux-second fraction about 4 liters.
4:20	225	220	158	80	1	No reflux - shut down because of decomposition.
						Last fraction about 1-1/2 liters.

Charge: 8.5 liters of stripped clarified C-2144.

CONFIDENTIAL

TABLE V

ANALYTICAL DATA ON DISTILLED PRODUCTS

***

Distillation	Sample	Inertness	Acidity	*Viscosity Centipoise	Vapor Pressure** mm. Hg.	Boiling Range at 1 mm. Hg.
Run 1	1st. cut	2.91%	Slight	7.42	14.09×10^{-3}	81 - 129° C.
Run 1	2nd cut	1.26%	Nil	14.57	3.69×10^{-3}	129 - 150° C.
Run 1	3rd cut	1.29%	Nil	21.40	2.86×10^{-3}	150 - 155° C.
Run 2	2nd cut	0.90%	Nil	14.72	3.40×10^{-3}	133 - 158° C.
Run 2	3rd cut	0.51%	—	—	—	—
Plant Specs.	—	0.30%	Nil	Not greater than 25.04	8×10^{-3}	—

* Viscosity tests made at 99° C.

** Vapor pressure measured at 60° C.

CONFIDENTIAL

14

TABLE VI

ANALYTICAL DATA ON TREATED PRODUCTS

***

Distillation	Sample	Inertness	Treatment
Run 2	2nd cut	0.90%	Aerated 1 hour at 70-75° C.
"	"	0.50%	Extracted CCl_4 at 70-80° C.
"	"	0.90%	Aerated 3 hours at 70-80° C.
"	"	1.11%	Extracted CCl_4*
"	"	0.51%	Extracted CCl_4, dried 4 hours.
"	3rd Cut	0.57%	Extracted CCl_4, dried 2 hours.
"	2nd Cut	1.10%	CCl_4 Extracted, dried 4 hours.*
"	"	0.20%	CCl_4 Extracted (4 times, 1/2 hour each) Aerated 2 hours.
"	3rd Cut	0.57%	CCl_4 Extracted (4 times, 1/2 hour each) Aerated 2 hours.
"	"	0.25%	CCl_4 Extracted (4 times, 1/2 hour each) Aerated 4 hours, aged 16 hours, aerated 2 hours.
"	"	0.25%	CCl_4 Extracted (4 times, 1/2 hour each) Aerated 4 hours, aged 16 hours, aerated 2 hours.

*Impure CCl_4 was used.

CONFIDENTIAL

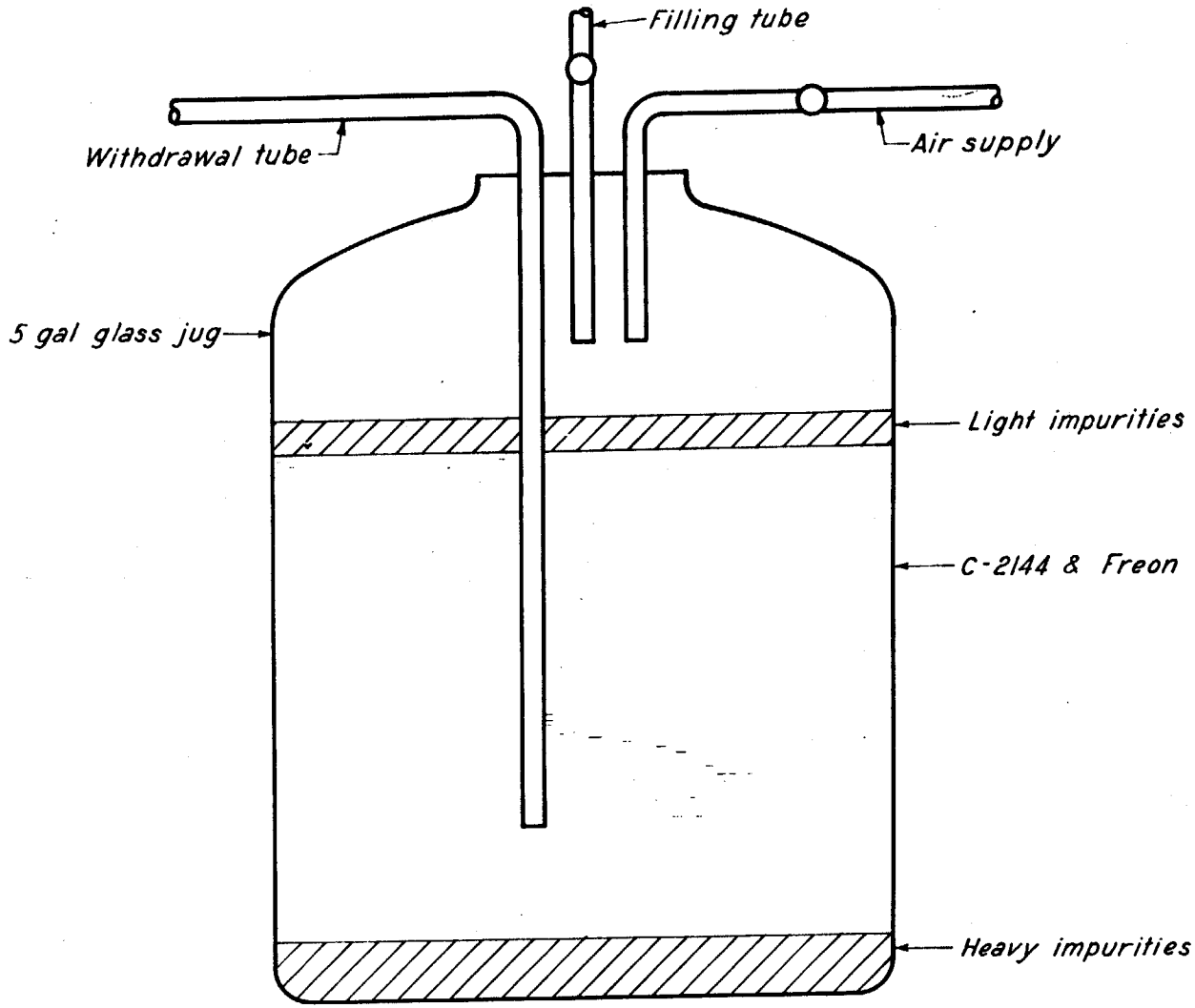

FIGURE I

CLARIFICATION EQUIPMENT

CONFIDENTIAL

5-12-47 (PRD)

DWG. NO. LD-A-173

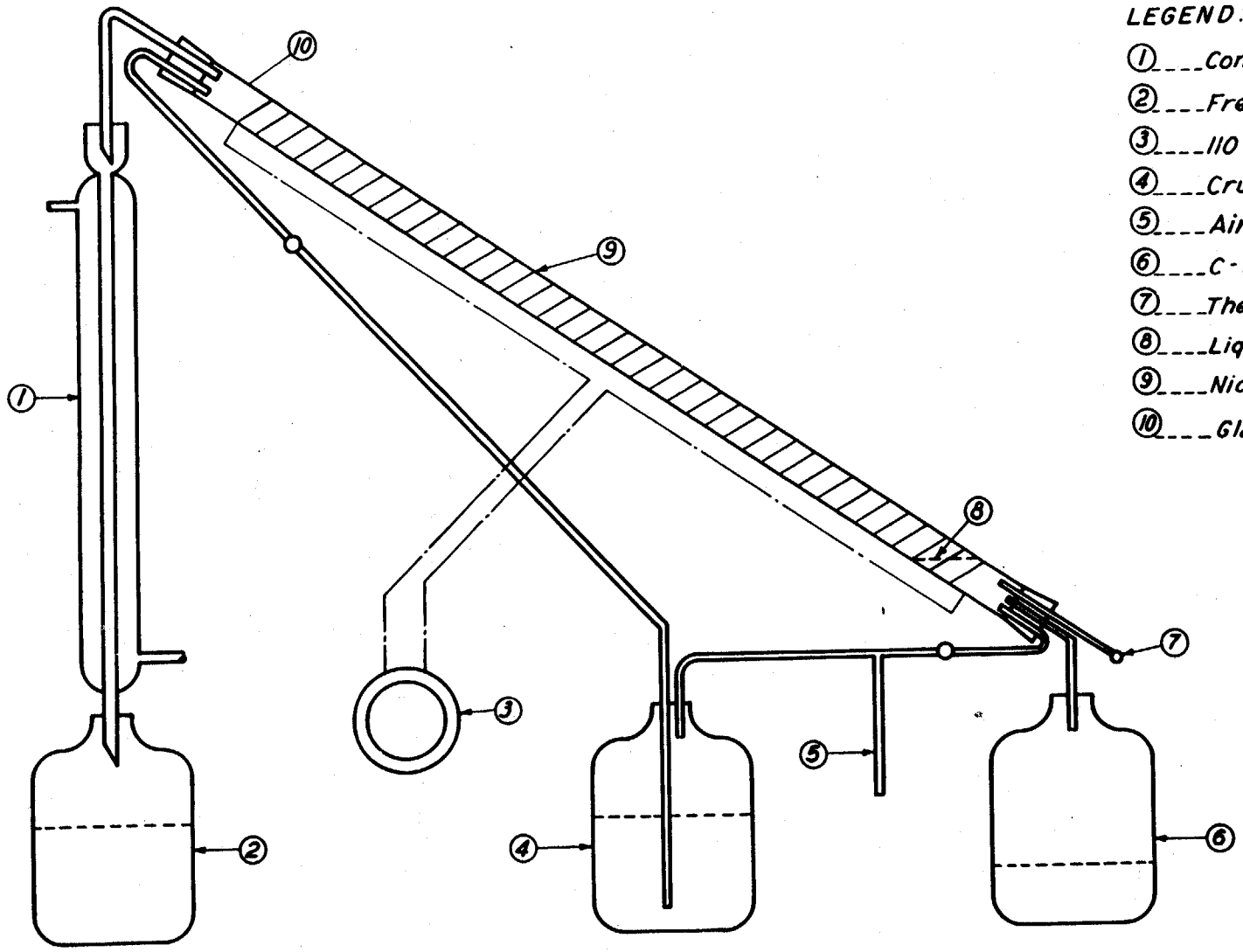

LEGEND:

1 ___ Condenser
2 ___ Freon
3 ___ 110 V variable transformer
4 ___ Crude C-2144 & freon
5 ___ Air supply - 5 PSIG
6 ___ C-2144
7 ___ Thermometer
8 ___ Liquid level
9 ___ Nichrome wire
10 ___ Glass tube

FIGURE 2

STRIPPING COLUMN

CONFIDENTIAL

DWG. NO. LD-A-174

5-12-47 (PRD)

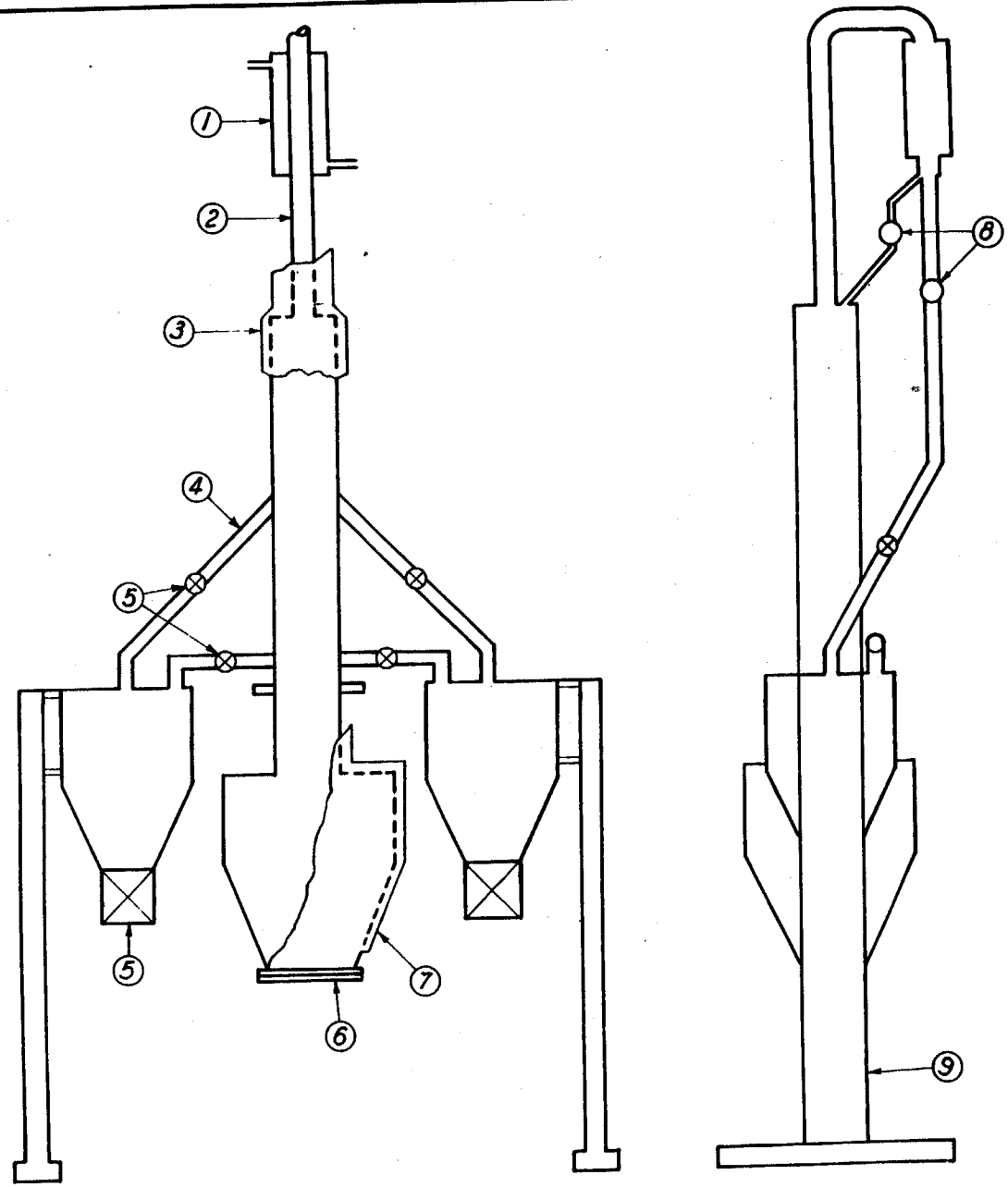

LEGEND:

1 ___ Condenser
2 ___ $1\frac{1}{2}$" pipe
3 ___ Magnesia insulation
4 ___ 1" pipe
5 ___ Crane valves
6 ___ Blind flange
7 ___ $1\frac{1}{2}$" insulation
8 ___ Sight glasses
9 ___ 4" channel

FIGURE 3

METAL STILL

CONFIDENTIAL

DWG. NO. LD-A-175

5-12-47 (PRD)

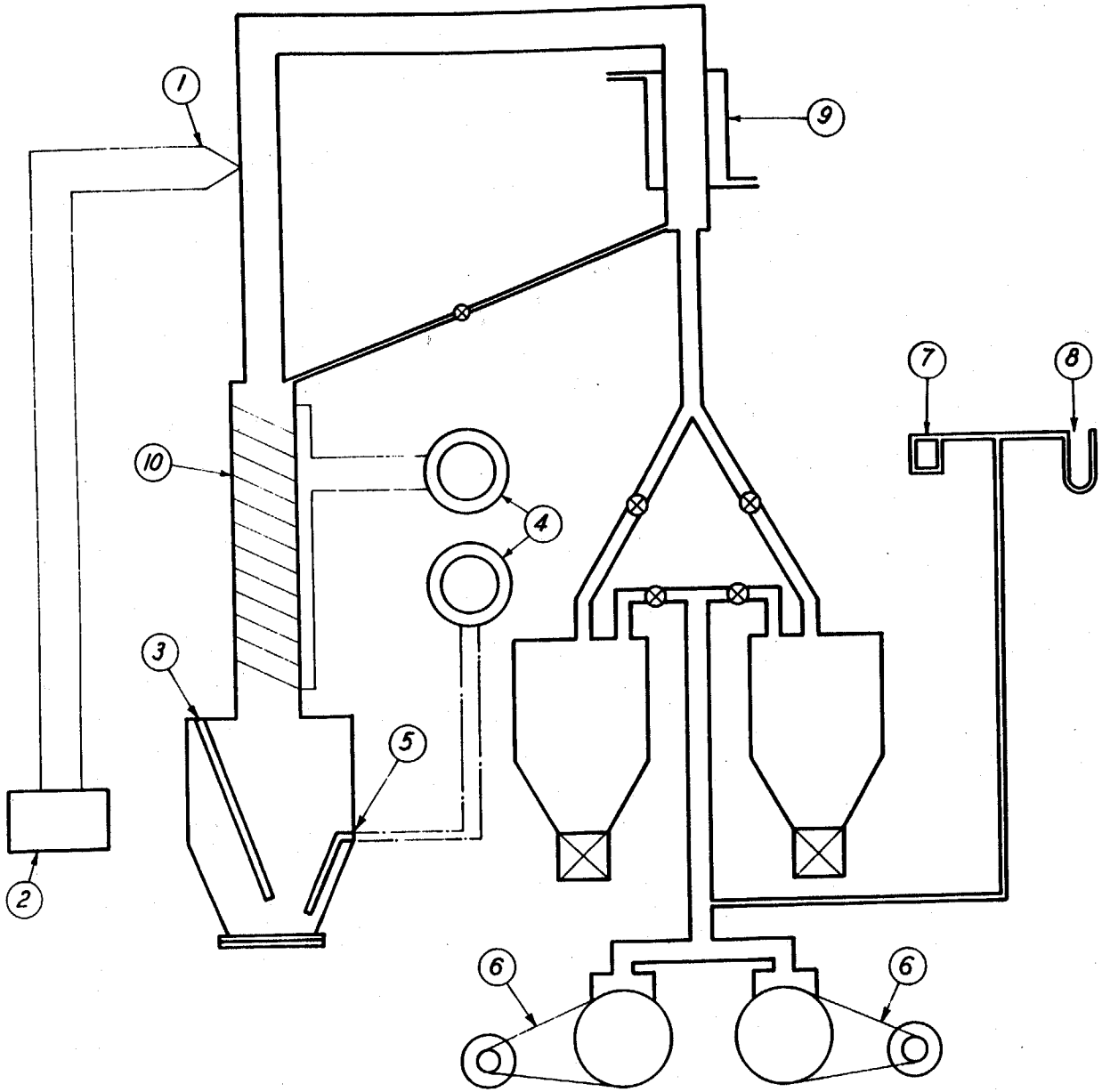

LEGEND:

1 ___ Thermocouple
2 ___ Potentiometer
3 ___ Thermowell
4 ___ Variable transformer
5 ___ Immersion heater
6 ___ Vacuum pumps
7 ___ Barostat
8 ___ Manometer
9 ___ Condenser
10 ___ Nichrome wire

FIGURE 4
METAL STILL

CONFIDENTIAL

DWG. NO. LD-A-176

5-12-47 (PRD)

CLASSIFIED DOCUMENT COVER SHEET

This document contains information affecting the national defense of the U. S. within the meaning of the Espoinage Act, 50 U.S.C., 31 and 32. Its transmission or the revelation of its contents in any manner to an unauthorized person is prohibited by law.

In general, a classified document shall not be copied or duplicated. If additional copies are necessary, they shall be requested from the originator. In an emergency, the originator may give telegraphic approval for reproductions, specifying series letter and number of copies. The originator must be notified immediately of the distribution of the reproduction. All duplicating sheets, stencils, etc., should be burned.

AEC RESEARCH AND DEVELOPMENT REPORT

File Index A-4162

Date April 19, 1947

CONFIDENTIAL

Copy 18

Series A

Classification

UNCLASSIFIED

INVENTORIED AUG 16 1951 By LR

RECOVERY OF C-2144

Short Title of Document

H. A. BERNHARDT, B. J. MASSEY, J. G. SCHAFFNER, E. STAPLE, E. A. WIGGIN

Author

CIRCULATION

All persons reading this document are requested to sign in the space below.

Name	Date	Name	Date

INVENTORIED AUG 6 1952 By

INVENTORY PLANT RECORDS CENTRAL FILES INV. 1956 REC. 2223 FILE X-REF. X-REF.

M-294

TECHNICAL LIBRARY ROOM 12 K1004-A

20

Acc # 1030