NOV 2 8 1988

#185

ORNL/TM-10664

ornl

OAK RIDGE NATIONAL LABORATORY

MARTIN MARIETTA

Tritium Effluent Reduction at Oak Ridge National Laboratory

J. T. Shor

ChemRisk Document No. 185

NAGED BY
RTIN MARIETTA ENERGY SYSTEMS, INC.
THE UNITED STATES
ARTMENT OF ENERGY

Printed in the United States of America. Available from
National Technical Information Service
U.S. Department of Commerce
5285 Port Royal Road, Springfield, Virginia 22161
NTIS price codes—Printed Copy: A03; Microfiche A01

This report was prepared as an account of work sponsored by an agency of the United States Government. Neither the United States Government nor any agency thereof, nor any of their employees, makes any warranty, express or implied, or assumes any legal liability or responsibility for the accuracy, completeness, or usefulness of any information, apparatus, product, or process disclosed, or represents that its use would not infringe privately owned rights. Reference herein to any specific commercial product, process, or service by trade name, trademark, manufacturer, or otherwise, does not necessarily constitute or imply its endorsement, recommendation, or favoring by the United States Government or any agency thereof. The views and opinions of authors expressed herein do not necessarily state or reflect those of the United States Government or any agency thereof.

ORNL/TM-10664

Chemical Technology Division

TRITIUM EFFLUENT REDUCTION AT OAK RIDGE NATIONAL LABORATORY

J. T. Shor

Date Published — November 1988

NOTICE: This document contains information of a preliminary nature. It is subject to revision or correction and therefore does not represent a final report.

Prepared for the
Environmental Upgrade Programs
(KG 02 00 00 0)

Prepared by the
OAK RIDGE NATIONAL LABORATORY
Oak Ridge, Tennessee 37831
operated by
MARTIN MARIETTA ENERGY SYSTEMS, INC.
for the
U.S. DEPARTMENT OF ENERGY
under contract DE-AC05-84OR21400

CONTENTS

ABSTRACT 1

1. INTRODUCTION 1

2. DESCRIPTIONS OF TRITIUM HANDLING AT ORNL 4

2.1 BUILDING 3033 4
2.2 BUILDING 7025 8
2.3 OTHER ORNL FACILITIES 10

3. PROBLEM ANALYSIS, BUILDINGS 3033 AND 7025 11

3.1 URANIUM BED OPERATIONS 13
3.2 VACUUM PUMP PROBLEMS 15
3.3 WORKER RADIATION EXPOSURE 15

4. TYPICAL TRITIUM STACK GAS REMOVAL SYSTEMS 15

4.1 GENERAL PROCESS DESCRIPTION 16
4.1.1 Mound Research Corporation (MRC), Miamisburg, Ohio 19
4.1.2 General Electric Company, Neutron Devices Department (Pinellas Plant), St. Petersburg, Florida . . . 19
4.1.3 Lawrence Livermore National Laboratory (LLNL) . . . 20
4.1.4 Los Alamos National Laboratory (LANL) 20
4.1.5 KMS Fusion, Ann Arbor, Michigan 21
4.1.6 Savannah River Plant (SRP) 21
4.1.7 Ontario Hydro 21
4.1.8 Brookhaven National Laboratory (BNL) 22
4.1.9 Princeton Plasmic Physics (PPP) Laboratory 22

5. DISCUSSION 22

5.1 URANIUM BED EXPERIENCE AT OTHER LABORATORIES 24
5.2 NEW TECHNOLOGY 26
5.2.1 Vacuum Pumps 26
5.2.2 Suggestions for Improvement of Rotary-Vane Vacuum Pump Operations 29
5.2.3 Oil Changes 30
5.3 TRITIUM MONITORS 31
5.4 EFFLUENT SAMPLING TECHNIQUES 32

6. CONCLUSIONS AND DISCUSSION OF COSTS AND BENEFITS 34

7. ACKNOWLEDGMENTS 37

8. REFERENCES 38

TRITIUM EFFLUENT REDUCTION AT OAK RIDGE NATIONAL LABORATORY

J. T. Shor

ABSTRACT

A study has been performed to determine the most cost-efficient technologies available to reduce the airborne emissions of tritium (T_2) from the Oak Ridge National Laboratory (ORNL) in accordance with the principles of "as low as reasonably achievable" (ALARA) dose equivalents to the population. Extensive consultations with other Department of Energy (DOE) laboratories and other tritium handling facilities in the United States and Canada have been conducted. Substantial reductions in tritium emissions can be made to bring ORNL within the range of emissions from other DOE laboratories. Equipment and methods are available in the form of (1) modern and versatile oilless vacuum pumps, (2) small-scale, stack-gas tritium effluent removal systems, and (3) process operations management techniques, which can reduce the releases of tritium to the atmosphere without creating additional radiation exposure on the ground. The equipment costs, not including engineering and installation for each tritium handling facility at ORNL, are estimated to be between $17,500 and $75,000, depending on the level of complexity of the system.

1. INTRODUCTION

This study was made to (1) investigate and identify the sources and routes of tritium in effluents from ORNL Buildings 3033 and 7025, where megacurie amounts are handled in gaseous, adsorbed, and liquid (contaminated pump oil) forms, (2) review available technology for reducing the amount of tritium in ORNL effluents, (3) evaluate and recommend equipment and methods to achieve these reductions, and (4) to provide a cost estimate for the recommended additions. The greatest quantity of tritium is handled in Building 3033 (1,000,000 Ci/year), much smaller and variable amounts in Building 7025 (30,000 Ci/year), and 0.35 Ci/year in the Biology Division, as shown in Fig. 1.

Tritium is an isotope of hydrogen with a mass of three; it emits low energy beta radiation and decays to helium with a half-life of 12.3 years. It is most hazardous when ingested as tritiated water (T_2O or

ORNL DWG 88-1065

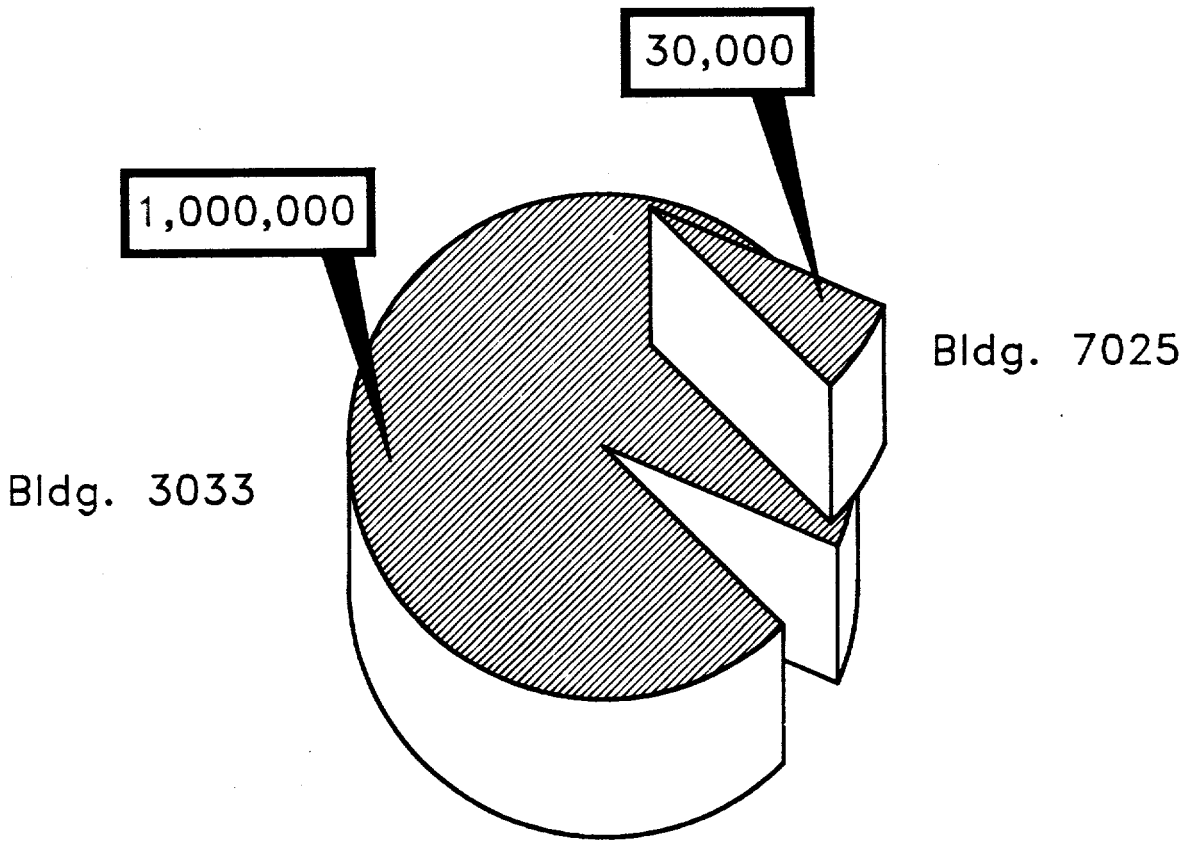

Fig. 1. Tritium inventories handled at ORNL.

HTO) which is formed by oxidation when the gas is in contact with air. At Building 3033, tritium is received in gas cylinders from the Savannah River Plant (SRP), purified, and distributed in smaller quantities to industry and research laboratories. At Building 7025, tritium is handled in small amounts to manufacture accelerator targets and material test samples. Recovery of tritium from spent radioluminescent light sources (RLS) is planned in Building 7025.

Atmospheric air monitors have detected tritium near the perimeter of ORNL but have not been capable of providing an accurate measurement of the amount evolved. An upper limit for the amount evolved can be calculated from the difference between the bulk amount received and that dispensed from or held in inventory at each facility. For example, using this means of calculation, 31,000 Ci were lost from Building 3033 in 1986. Based on such calculated values and the most rapid estimates of tritium oxidation to tritiated water, the maximum dose equivalent from the ORNL airborne tritium discharges is estimated at worst to be ~0.46 mrem (~4.6 μSv)/year for a person off-site; this represents the largest single source of effluent radiation exposure from ORNL.[1] This dose equivalent, however, represents only 1.8% of the maximum permissible dose according to Clean Air Act regulations.[2] Nevertheless, the National Academy of Sciences and the National Research Council recommended to ORNL management that a re-evaluation be made of existing atmospheric emissions to determine if they might be reduced further in accordance with the ALARA policy. Accordingly, this present study was commissioned to survey the literature and to make inquiries of other DOE laboratories which handle tritium, to determine the most cost-efficient technologies available and their potential to reduce personnel exposure to tritium from airborne sources, without concomitant increases in exposure on the ground. Information-gathering visits were made to the Lawrence Livermore National Laboratory (LLNL) and the Sandia National Laboratory at Livermore (SNL). Also, technical experts from the Monsanto Research Corporation, Mound Laboratory, visited ORNL for consultations. Moreover, discussions were held with the operators of virtually every tritium handling facility in the United States. The results of these activities, along with information from the literature, are contained in

this report. Where sufficient data are lacking, recommendations for obtaining additional data are made along with possible action plans.

This study provides detailed information and an analysis of treating the stack gas effluents by means of effluent removal systems (ERS) in which the tritium is catalytically oxidized to T_2O or HTO and sorbed on molecular sieves of zeolite or a similar material. Disposal techniques for the T_2O-loaded sorbents are also described. Other means of reducing tritium effluents through the installation of more versatile tritium-compatible pumping equipment and by improving operating and maintenance techniques are described, and cost estimates of the various improvements are provided.

2. DESCRIPTIONS OF TRITIUM HANDLING AT ORNL

2.1 BUILDING 3033

Building 3033, located near the center of ORNL (Fig. 2), is the principal tritium processing facility and source of tritium effluents through the 3039 Stack. Krypton-85 is also processed in Building 3033; however, that operation is separate from the tritium operation, except for the use of common exhaust ducts.

A schematic of the tritium purification and distribution operation in Building 3033 is shown in Fig. 3. Note that an oilless vacuum pump is used to recirculate gas around the uranium beds (also known as U-beds and U-traps). The exhaust gas from the entire tritium facility is transferred by means of a rotary vane vacuum pump through a long ductwork (not shown) to the 3039 Stack which is 250 ft (76 m) high. Operation of the tritium equipment is periodic to meet demand and employs one shift and one operator.

The purpose of the tritium operation at 3033 is to purify the tritium gas received periodically from the Savannah River Plant (SRP) and to distribute it in smaller quantities to industrial users. In prior years, tritium radioluminescent light sources were manufactured. The tritium is received in 50-L cylinders from SRP. They are called LP-50 cylinders to indicate their "low pressure" [700 mm Hg (93 kPa)], relative to other tritium shipping cylinders.

ORNL DWG 87-11983

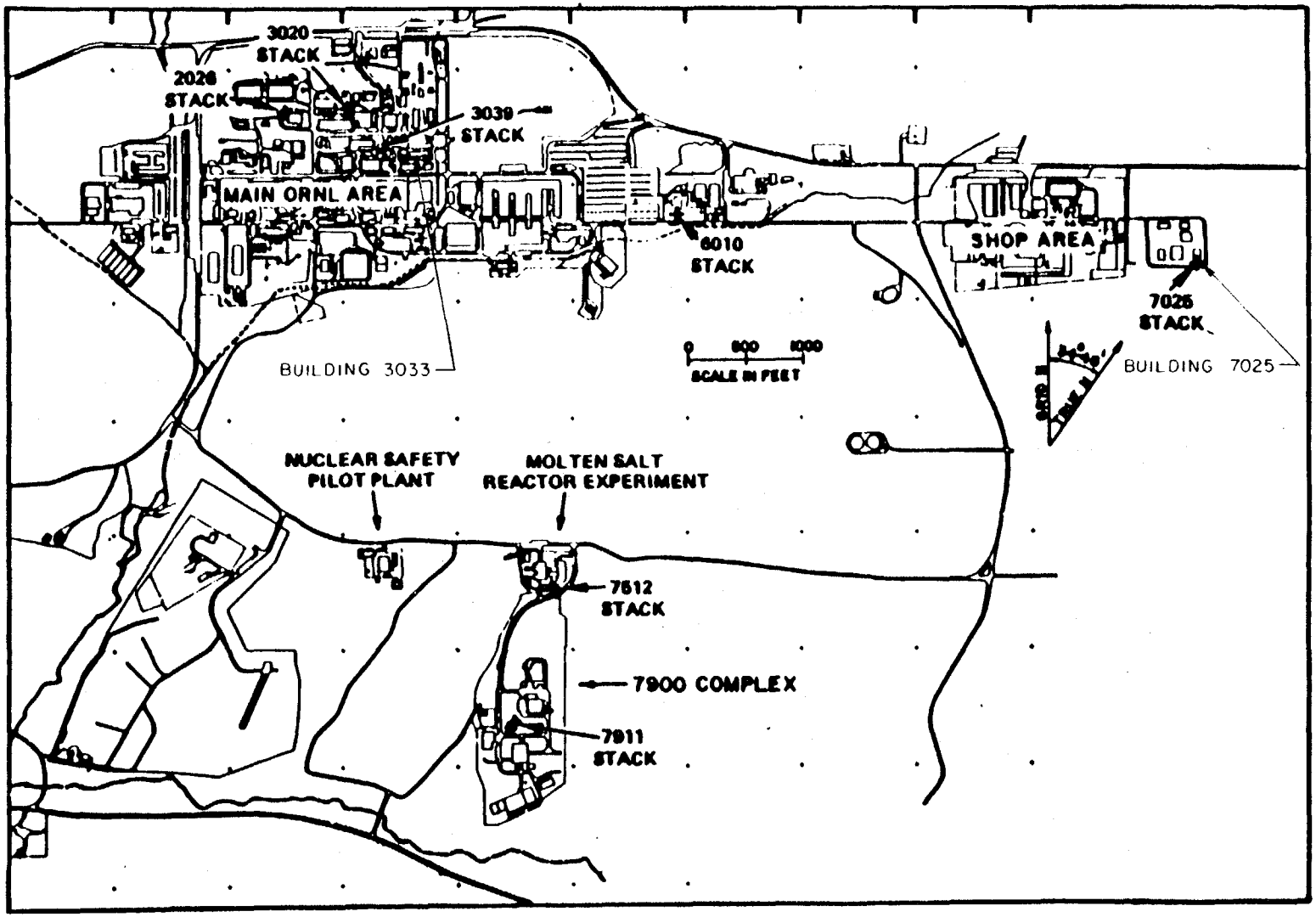

Fig. 2. Map of ORNL showing locations of Buildings 3033 and 7025.

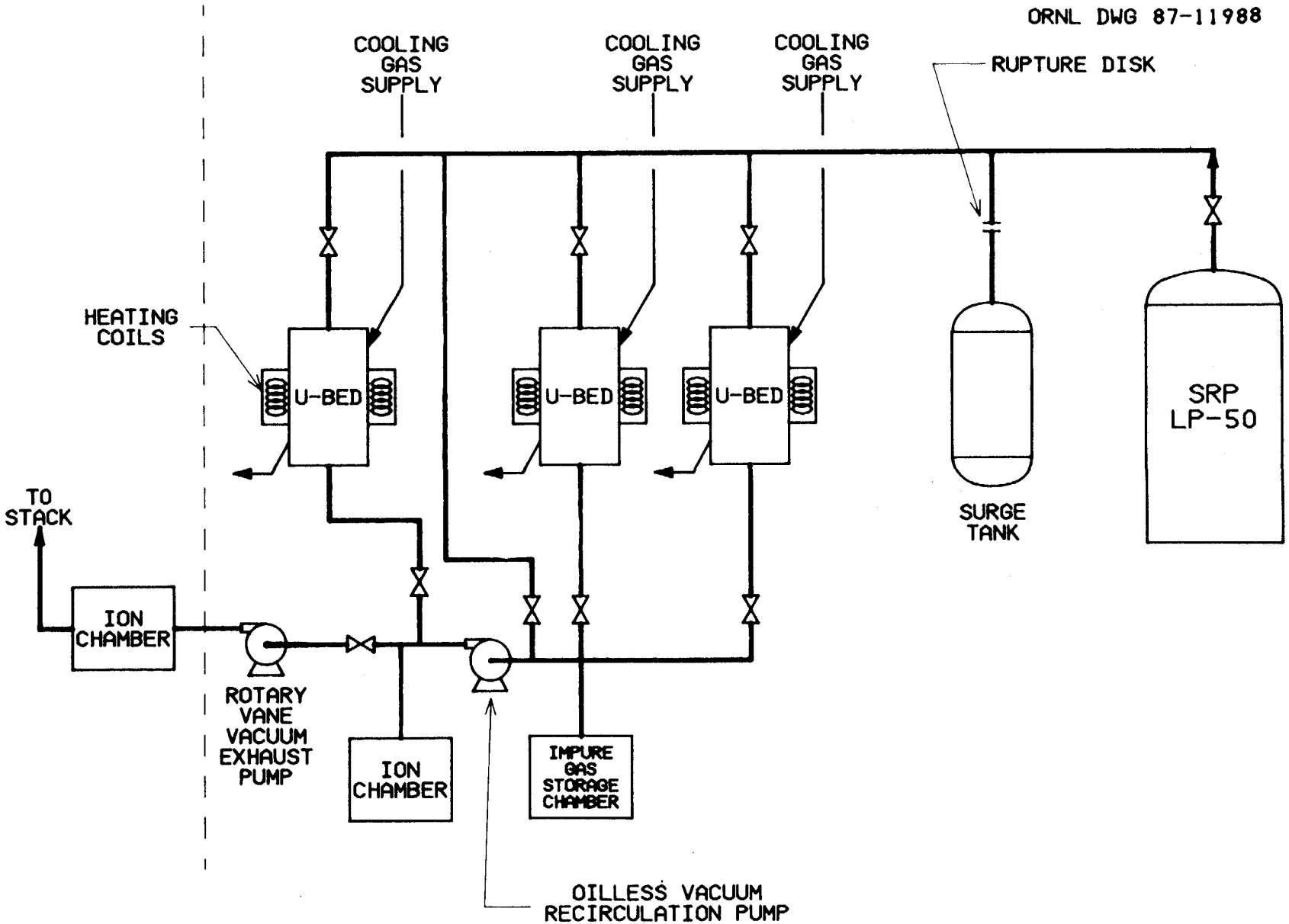

Fig. 3. Simplified Building 3033 process arrangement.

In the first step of the tritium purification, it is pumped from the LP-50 cylinders by a U-bed sorption process without the use of the oilless recirculation pump. The bed functions like a vacuum pump, and the tritium pressure falls very rapidly at first. Helium, which has accumulated from the radioactive decay of tritium, is not sorbed on the U-beds and interferes with the sorption of tritium by creating a barrier to diffusion. A similar diffusion resistance problem occurs with most other solid sorbent materials. (A notable exception is palladium metal which sorbs helium as well as tritium and holds the helium more strongly in the crystal lattice. The production of extremely high purity tritium is then possible. More information on this process will be provided later.) The diffusive resistance of helium can be overcome to a degree by recirculating the tritium gas over the sorption bed to reduce the thickness of the boundary layer and speed sorption. The recirculation continues until the pressure becomes essentially constant, an indication that the U-bed sorptivity has declined greatly. The remaining tritium in the system lines and the LP-50 is equalized with a tank called the impure tritium storage tank. This gas is recirculated across the same U-bed storage trap until the pressure decreases to a low and constant level. Then the U-bed is valved off and the tritium remaining in the lines is vented to the 3039 Stack. Tritium gas is also lost from gas cylinders returned by customers which have small, presently unrecoverable, heels which are vented to the 3039 Stack.

When customers place orders, the tritium is desorbed from the U-bed by heating the bed to an elevated temperature (450°C). The tritium is released and collected either on another smaller U-bed in a shipping container or in a small cylinder for shipment. Again, tritium is lost to the 3039 Stack from line holdup during these operations.

Containment of the tritium is provided by a stainless steel hood with an air flow of 0.014 to 0.71 m^3/s which discharges to the isotope area ventilation and thence to the 3039 Stack. The building itself, which is maintained at a negative pressure versus atmospheric, provides further containment. Ionization chambers are provided (1) in the discharge duct from the rotary vane vacuum pump, (2) in the line between U-beds to monitor process activity, and (3) on the off-gas discharge to

the stack (planned). Problems are often encountered which make these chambers inadequate to assess tritium losses as will be explained.

The Building 3033 tritium stack gas detection may be complicated by the presence of ^{85}Kr from other operations in the same building. Currently, the radiation detector cannot distinguish between tritium and ^{85}Kr beta activity, and the radiation source can only be identified by processing the two isotopes at different times. An upgrading program is underway to provide improved detectors on the 3039 Stack which can discriminate tritium from ^{85}Kr; further potential solutions to the cross-contamination monitoring problem are described below in Sect. 5.4.

2.2 BUILDING 7025

Building 7025 is located at the east end of ORNL as shown on the map, Fig 2. A simplified flowsheet describing the tritium operations is shown in Fig. 4. The uranium bed storage capacity, over 600,000 Ci, significantly exceeds the capacity of the Building 3033 operations; however, in practice the inventory is much smaller and the yearly throughput of tritium in recent years is ~30,000 to 40,000 Ci. The 7025 operations are even more intermittent and unpredictable than those of 3033; two- to three-month-long periods of inactivity occur typically. The 7025 facility is also a one-shift operation and usually requires one person. Figure 4 shows that recirculation of tritium around the U-beds is not practiced at 7025 as it is at 3033. The 7025 operations are equipped to create very high vacuum using sophisticated sputter-ion pumps for sample preparations. These pumps are supplemented by rotary-vane, oil-sealed, roughing vacuum pumps which provide the basic vacuum required for the high vacuum pumps and U-bed operations. The building is serviced by the 7025 Stack of 14 ft (4 m) height. Stack gas monitors are being upgraded.

Building 7025 is known as the Tritium Target Fabrication Facility, and it is used for the manufacture of metallurgical samples containing tritium. It is also outfitted to salvage tritium from light sources, though this latter work is not yet underway. It is equipped for the vacuum deposition of UO_2 and ThO_2 onto a variety of substances for target use, unrelated to its tritium activities.

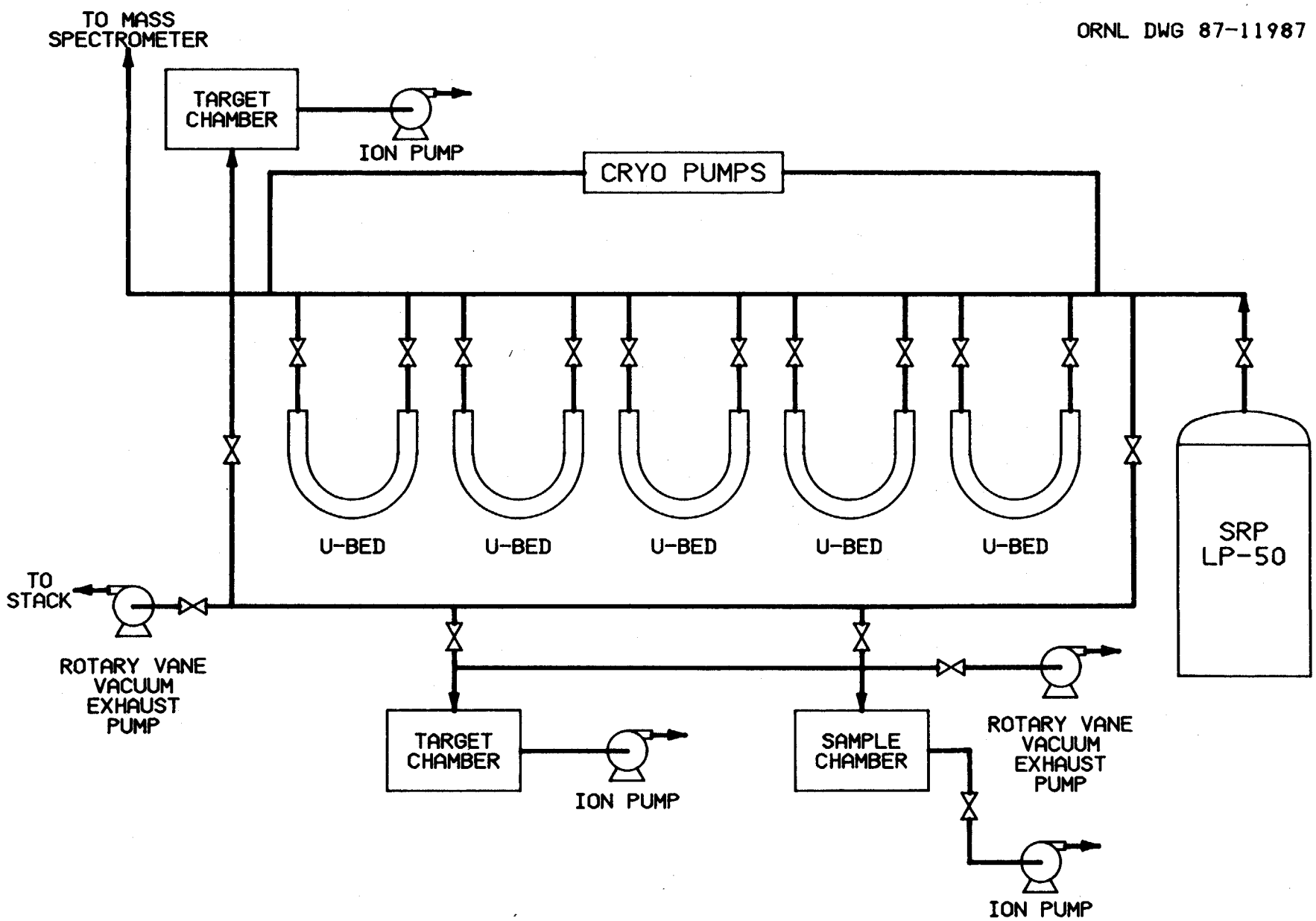

Fig. 4. Simplified Building 7025 process arrangement.

As in Building 3033, the equipment in Building 7025 is contained in high velocity air flow hoods (0.75 m^3/s) and tritium is stored and purified using U-beds. The most probable route for tritium loss to the stack (which, like Building 3033, contains no tritium stack gas removal equipment) is through the rotary vane vacuum pump exhaust during the U-bed loading operations. The procedure consists of (1) exposing the U-bed to tritium, (2) allowing the pressure to equalize on it without recirculation, and (3) purging the U-bed unsorbed gas (which contains largely helium and unsorbed tritium).

Building 7025 contains equipment designed to recover tritium from spent light sources containing tritium-helium gas mixtures of 40% by volume tritium. The recovery equipment consists of a palladium-silver membrane through which tritium diffuses preferentially to a collection U-bed. This activity is not currently being done; however, when begun, it could result in an estimated 5 to 10 Ci of tritium loss per batch of light sources.[3]

Stack gas monitoring equipment installed previously to catalytically oxidize tritium effluents to T_2O for sorption on drier beds has been recently refurbished but is not yet operational. Mass spectrometers (MS) are located in the tritium manifold for process control and can be used to assess more accurately, possible tritium losses during the U-bed operations.

Building 3033, by contrast, does not possess such sophisticated MS equipment; thus, samples are taken to the Y-12 Plant periodically for assessment, and this causes considerable inconvenience to operators. The accelerator target manufacturing area of Building 7025 lacks the oilless metal bellows recirculation pump featured in Building 3033; however, installation of one is planned in the section where radioluminescent light sources (RLS) will be reclaimed. The accelerator target manufacturing is at a very low production level and may not revive.

2.3 OTHER ORNL FACILITIES

Tritium has been handled in elemental form in the Chemical Technology Division at ORNL, Building 4500N, in amounts of ~50 to 500 Ci.

Also, tritiated water, T_2O, has been found in effluents from the Solid Waste Storage Area 5 at ORNL for many years. Most of this liquid empties into White Oak and Melton Branch Creeks.[4] The effluent losses are ~3,000 to 5,000 Ci per year. Measures of airborne effluents from this source made at the White Oak Dam show no tritiated water contamination; however, it is possible that some T_2O is volatilized nearer the source of losses. This is not currently assessed.

The Biology Division of ORNL, located at the Y-12 site, uses tritiated organic compounds purchased from sources outside ORNL as radiotracers. The amounts are ~350 millicuries (mCi) per year. The solid wastes from this work are sent to the ORNL burial grounds, and the liquid wastes are presently stored. Buildings 3033 and 7025 are the only significant sources of airborne tritium from ORNL.

3. PROBLEM ANALYSIS, BUILDINGS 3033 AND 7025

Because of the high throughput of tritium and the losses implied by available mass balance data, it appears that Building 3033 is responsible for the major losses of airborne tritium from ORNL. Its yearly throughput of 1.5 megacuries (MCi) far exceeds those of Building 7025 and other ORNL operations. The potential routes by which tritium is lost can be divided into two categories, (1) vacuum pump exhaust effluent losses and (2) fume hood losses. All equipment to the right of the dashed line in Fig. 3 is enclosed in a fume hood, and losses from diffusion or leaks, etc., in this area are termed hood losses. The output of the vacuum pump is to the left of the dashed line, and tritium appearing in its exhaust is termed vacuum pump losses. Vacuum pump effluent losses can be further subdivided as to their origin: (1) losses from returned shipping containers which occur because the small amounts of tritium found in the containers is of unknown purity, which can damage the U-beds, and it is consequently purged to the stack upon receipt, (2) losses from incomplete sorption of tritium on U-beds, and (3) losses from routine evacuation of lines prior to the loading of SRP LP-50 cylinder contents on U-beds. Losses of tritium from the fume hoods to the stack may occur because of (1) maintenance work during

which lines are disconnected, (2) diffusion of tritium through vessels, valves, and piping, (3) leakage around the vacuum pump shaft, leakage from pressure gauge valves, or (4) from other unidentified sources.

Because of instrument problems with the ionization chamber radiation detection equipment on the hood exhaust system, no accurate measurements of actual tritium stack effluents by the different paths are known. The mass balance data around Building 3033 provide an approximate ceiling on possible tritium losses to the environment. The dual ionization chambers, which monitor tritium in the exhaust duct, soon become contaminated with stationary tritium compounds during normal operations. This contamination results in a constant high tritium level indication, which may bear little relation to the actual duct gas concentration. A similar problem exists with the vacuum pump exhaust tritium monitor; and consequently, no good data exist on the relative losses from hood and vacuum effluents. Leak tests are routinely performed on sections of the vacuum system, and no gross leaks are probable in those sections. Maintenance operations, especially vacuum pump oil changes, have introduced levels of contamination into the hood which are ever present and which could contribute to gradual background tritium losses from the hood. (The Overhoff ionization chambers, located in the duct and the room of 3033, are not provided with correct circuit diagrams and are difficult to service. The balance of the ionization chambers are an ORNL design and work much better.) In general, none of the other DOE laboratories use ionization chambers to report quantitative data on tritium releases. Stack gas samplers are the method of choice in other DOE laboratories and their installation is planned at ORNL. Currently, combinations of Johnson and Overhoff, dual in-line, ionization chamber monitors are installed in the 7025 Stack for shakedown testing and are in planning for the 3039 Stack. The monitoring difficulties will be addressed further in the next section.

It is beyond the scope of this report to provide definitive solutions to the tritium losses problems because data are unavailable on their precise origin; however, various educated estimates may be made, and possible solutions to the various scenarios are offered.

Building 7025 tritium losses could very likely be reduced by the installation of a metal bellows, or similar oilless vacuum pump, to recirculate the helium-contaminated tritium gas over the U-beds prior to the purging of these gases to the stack. The addition of an inert carrier gas is necessary at pressures lower than 50 torr (6.7 kPa) owing to limitations of the metal bellows pumps. Building 7025 operations are at such a small scale (currently 6000 Ci) and the tritium losses so correspondingly small that the justification of the cost of a recirculation pump may need very close scrutiny. Effluent reduction could be effected by the use of the small-scale portable ERS operation such as the "crash cart" designed at LLNL for small-scale, inexpensive tritium recovery. It is a portable catalytic oxidizing reactor with molecular sieve sorption columns and a laboratory-scale ERS, which can contain 20,000 Ci of T_2 before saturation. Typically, other tritium facilities perform uranium bed recirculation and then send the exhaust gas from that operation to the ERS. The "crash cart" might also be valuable in the future to the tritium recovery operation from the spent light sources. Like in Building 3033, the "crash cart" inlet would be located on the rotary oil-sealed vacuum pump exhaust. Its size could be estimated based on the quantity of tritium handled, frequency of vacuum pump operations, and vacuum pump size. The cart would function intermittently, and like the 7025 operation, its operation would probably follow soon after the U-bed loadings or the light-source renewal procedures.

3.1 URANIUM BED OPERATIONS

Uranium turnings, contained in specially made stainless steel canisters, react stoichiometrically with tritium to yield uranium tritide as shown in Eq. 1:

$$(3/2)\ T_2 + U \rightarrow UT_3. \qquad (1)$$

This reaction proceeds very nearly to completion at room temperature; and in the process, the uranium turnings are pulverized. The equilibrium partial pressure of tritium above an unsaturated uranium bed (U-bed) at 25°C is negligible, 10^{-8} torr (10^{-6} Pa).[5] However, the single reaction (Eq. 1) is enormously complicated by the presence of

the helium decay daughter of tritium and the diffusive barrier that it creates. Uranium is not the only possible sorption metal (Ti, Zr, and Pd, to name a few, have interesting adsorption isotherms); however, the same sorption difficulties are encountered whenever tritium is processed because of the inherent presence of helium.

Diffusion of tritium through a blanket of helium (which is not sorbed by uranium) limits the rate of the sorption reaction. To mitigate this effect, the gas is circulated through the U-bed to reduce the helium boundary layer thickness. The process is still fraught with difficulties. The time required to sorb tritium quantitatively rises greatly with increasing helium contamination. In addition, the exothermic sorption reaction of tritium and uranium can cause temperatures to rise locally in the U-bed.[6] Unless the U-bed is a virgin one (having never before seen tritium) or a regenerated one (having been heated to very high temperatures to release the helium), the helium produced in the uranium lattice by radioactive decay may desorb from the bed and add to the overpressure above the bed and further impede the tritium sorption process. According to P. Coronado of LLNL, the U-beds (without regeneration) can reach helium saturation within three years of ordinary operations. Thereafter, whenever tritium is sorbed, quantities of helium are released because of localized heating effects. (The tritium partial pressure itself may not be so greatly affected by this localized heating because of the rather flat tritium isotherm below 250°C.) Present operating procedures in Building 3033 do not provide for cooling of the uranium storage bed during tritium loading and small bed temperature rises are observed. Localized temperatures in the bed may be higher, however.

SRP LP-50 tritium cylinders are currently stored, sometimes several months, before loading on U-beds in Building 3033, thus permitting further helium ingrowth and aggravating the helium blanketing problem. In the past, U-beds in Building 3033 have been observed to deteriorate in performance probably because of air in-leakage to the system. Slow oxidation of the U-bed contributes directly to the loss in hydrating capacity, and eventual replacement is indicated.

3.2 VACUUM PUMP PROBLEMS

A rotary-vane, oil-sealed vacuum pump of 0.9 scfm (25 L/min) capacity currently is in use at Building 3033. It is plagued by tritium oil contamination and degradation. Inevitable tritium losses can quickly contaminate the pump oil and lead to oil breakdown. Frequent changing of pump oil contributes contamination to the overall hood area, which leads to higher personnel radiation body burdens as well as possible tritium losses to the stack. Furthermore, the oil is a contaminated liquid waste.

3.3 WORKER RADIATION EXPOSURE

Typical body burdens from tritium at LLNL and Mound laboratories have been assessed at levels less than 10 mrem (0.1 mSv)/year.[7] These laboratories conduct much of their work in glove boxes and on occasion with special equipment, such as a remotely operated vacuum pump oil changing apparatus. Oak Ridge National Laboratory has periodically had difficulties with elevated tritium urine levels in technicians and craftsmen, especially after vacuum pump oil changes performed in the facility hoods. Judging from experience at other laboratories, the tritium exposure received during oil changes can be reduced to levels below detectability. This could probably be accomplished by taking greater precautions such as using tritium impermeable clothing and gloves and by reducing background hood contamination levels. New tritium management procedures are being instituted to reduce these exposures.

4. TYPICAL TRITIUM STACK GAS REMOVAL SYSTEMS

Elemental tritium, once mixed with an oxygen atmosphere or in small concentrations in inert atmospheres, can be quantitatively removed with available technology by catalytic oxidation of the tritium to T_2O and sorption of the T_2O on molecular sieves.[8] There are minor variations in this general scheme which is in use or under construction in processes of varied scale in virtually every tritium handling facility in the

United States. Hence, a fairly in-depth description of it will be made. The term effluent removal system (ERS) will be used to describe the generic process of catalytic oxidation of tritium followed by molecular sieve sorption of the resulting T_2O. A general process scheme is provided in Fig. 5. However, actual systems may contain fewer or slightly more steps.

4.1 GENERAL PROCESS DESCRIPTION

The feed gas containing tritium and other gases from processing operations is stored in holding tanks until a specified pressure is reached; then, operation of the ERS is automatically started. A typical ERS operation begins by pumping the gas from the process vacuum pump discharge through a filter to remove organics which possibly arise from the oil sealed rotary vacuum pumps. The gas then passes through an ion chamber to assess its tritium concentration and is stored in surge tanks until a pressure of 650 mm Hg (86.6 kPa) is reached. Next, the gas is preheated to ~540°C and charged to the reactor which is usually maintained at temperature at all times and has a residence time of ~2 s. The gas effluent, T_2O, is next fed to zeolite molecular sieves (typically) which have strong affinity for T_2O. The gaseous effluents from the molecular sieves are sent to recycle or stacked depending on their tritium composition.

There are many small variations in the ERS's among the laboratories studied, but the most significant variations are in the type of catalyst. Palladium (Pd) and platinum (Pt) catalysts of proprietary composition, supplied by Englehard Company, are popular catalysts according to most recent reports. Hopcalite, composed of CuO and MnO_2, also converts tritium to T_2O at a somewhat lower temperature than the precious metal catalysts; and it can function without a continuous oxygen supply if periodic regeneration is performed. Pure platinum catalysts are also in use. A 1979 Livermore report[9] suggests that the pure Pt catalyst is more effective, per unit surface area, at ambient temperature operation. This may be useful in gas monitoring equipment. Savannah River Laboratory (SRL) reports have indicated that Pt-Pd catalytic reactors

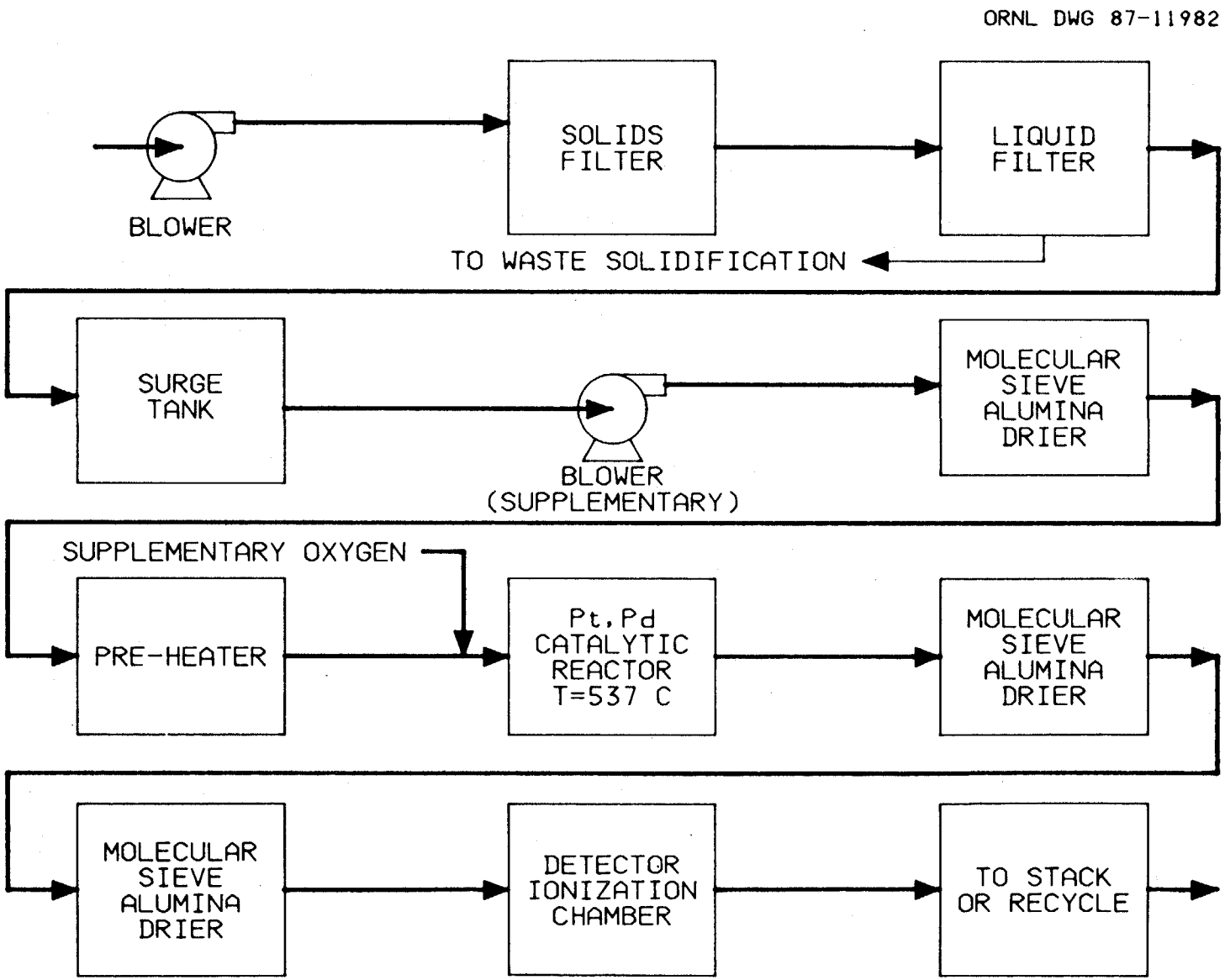

Fig. 5. Flowsheet of a typical ERS process.

downstream from Hopcalite reactors are easily poisoned. Most tritium facilities, with the exception of Mound, no longer use the precious metal catalysts in series with Hopcalite catalysts.

Though certain problems have been encountered during the early installation of the effluent removal systems, the technology is now very well proven and reliable. One ERS has been in operation for over twenty years with minor difficulties. [SNL had problems (now corrected) with copper tubing during their early ERS operations, and it has been on-line nearly continuously since 1977.][10] The most significant difficulties have been pump failures and air in-leakage to their ERS. The latest systems are generally computerized and can function largely automatically.

However, minor differences exist among the facilities which handle tritium. Effluent removal systems are in construction, design, or in place at most of the following tritium facilities: Lawrence Livermore National Laboratory (LLNL), Sandia National Laboratories, Livermore (SNL), Mound Research Corporation (MRC or Mound), Los Alamos National Laboratory (LANL), General Electric Neutron Devices Pinellas Plant (Pinellas), Brookhaven National Laboratory (BNL), KMS Fusion, and Savannah River Plant (SRP) and Laboratory (SRL).

LLNL has an ERS under construction to further reduce their relatively small tritium effluents, presently 1000 Ci/year. Only ORNL and the Nevada Test Site have no effluent removal system. These ERS systems are available in widely varying sizes from analytical to production scale. At SNL, two systems are in use. One is designed for vacuum pump effluents and another for glove box or hood exhausts. The small-scale pump system has less redundancy and features surge tanks to hold exhaust until a quantity sufficient to start the catalytic reactor is collected. The larger-scale ERS at Sandia was designed and built by Englehard Industries Systems Department, Union, New Jersey.[11] It contains one catalytic reactor with an Englehard catalyst believed to be Pt-Pd based. Its capacity is 340 m^3 per hour with a decontamination factor of 1000:1 per pass, in the ranges of most feed concentrations of tritium. The original copper piping developed leaks at many welds and an alternative

stainless steel construction is recommended. Modifications were added to the system (from experience) to minimize the volume of the system which was exposed to personnel during maintenance.

The molecular sieve driers can be regenerated remotely. The T_2O is driven from the molecular sieves to a clay-like sorbent in a shipping container which can be sent to tritium recovery or burial depending on tritium concentration. The catalyst is replaced very infrequently and, if properly handled, should not require regeneration. The glove box effluent recovery system is a million dollar system because of its large size.[12] The glove box, secondary containment system of SNL, is an innovation in tritium handling which, along with their glovebox purification system (gps), maintains very good control of tritium personnel exposure and stack effluents.

4.1.1 Mound Research Corporation (MRC), Miamisburg, Ohio

The tritium process facility at Mound handles very large inventories and is equipped with a very sophisticated effluent removal system. It features two catalytic reactors in series, one equipped with "Hopcalite" to oxidize tritium and a second equipped with Pd-Pt designed to oxidize tritiated hydrocarbons. Since the system operates continuously and occasionally the O_2 concentration in the feed gas becomes inadequate for the Pt-Pd reactor to function, the oxygen providing ability of the Hopcalite reactor is used. Their ERS features an elaborate gas inlet filtering scheme which cools the gas to +30°F (-1.1°C) to remove H_2O and condensable hydrocarbons in addition to the conventional mechanical filter. Also, the gas passes through a molecular sieve drier bed prior to entering the reactor to remove minute traces of water.[13] The sorbed tritiated water is shipped in special drums to the Nevada Test Site for burial. A facility designed to recover tritium gas by cryogenic distillation from these wastewaters is currently coming on-line at Mound.

4.1.2 General Electric Company, Neutron Devices Department (Pinellas Plant), St. Petersburg, Florida

The Pinellas Plant, which is believed to handle tritium inventories similar in quantity to those of ORNL, has the oldest ERS in the nation,

now in the process of renewal and upgrading. The new system will feature computer microprocessor process controllers, larger molecular sieve columns to sorb the T_2O, and larger feed gas holding tanks. Their objective is the reduction of the present 1000 Ci/year loss to much lower levels by better process control. The system still features Hopcalite catalysts very similar to the 1960 version. (The T_2O saturated molecular sieve beds are not regenerated but are buried in stainless steel containers.)

4.1.3 Lawrence Livermore National Laboratory (LLNL)

LLNL has an ERS under construction patterned after that of Mound Laboratory, but their inventory and capacity is classified. Much of their work is performed in very tight glove boxes in inert argon atmospheres, which is purified by very-small-scale Pt-Pd catalyst oxidation and molecular sieve sorption similar to the larger-scale ERS. Also available, and of possible interest to ORNL, is their portable "crash cart" designed to recover tritium (using the conventional Pt-Pd reactor molecular sieve sorption technique) from closed contained systems, where the only alternative would be to release the tritium to the stack. Functioning in batch mode, it can handle 5 cfm (142 L/min) flow rates and a maximum of 1 kg T_2O in its molecular sieves, so its capacity is substantial. Its cost with instrumentation is around $17,000. Their wastes, like those of Mound, are shipped to the Nevada Test Site for burial. It was designed as an interim solution to Livermore's effluent difficulties and has performed well for over a year and will continue in operation at least until their large-scale effluent recovery system is fully operational.

4.1.4 Los Alamos National Laboratory (LANL)

The LANL has two facilities which handle tritium in large quantities. It also has two separate tritium gas recovery systems: (1) a tritium waste treatment (TWT) and (2) an emergency tritium clean-up (ETC) system, operating in continuous and batch mode, respectively. The TWT was built by Englehard Company and handles 25 L/s (total gas flow) at standard temperature and pressure; the ETC system handles

2,460 L/s (total gas flow) and can handle a maximum loading of ~1 MCi tritium release. Little in novel technology, not already discussed, however, is in these processes.

4.1.5 KMS Fusion, Ann Arbor, Michigan

KMS Fusion, Inc., a small-scale user of tritium (6000 Ci/year) with 100 Ci/year losses, uses the Englehard ERS process. Their small-scale "gas purifier" as it is called, was inexpensive ($7200). The T_2O collected on the zeolite is desorbed onto Drierite, $CaSO_4$, and shipped to Richland, Washington for burial. The major interest here is in the evident lower cost of the ERS with reduced scale that their system demonstrates. Their scale is probably too small, however, for ORNL effluent management.

4.1.6 Savannah River Plant (SRP)

SRP has in operation stack gas tritium removal equipment, and an improved larger-scale process is currently in design based on Mound, LANL, and SNL experience. It has a 100 scfm (2,830 L/m) capacity and a 1-s residence time in the reactor. Smaller variations [(15 scfm) 425 L/m] of the same overall process have been in operation 25 years. One very interesting, unique, aspect to the SRP process is their use of various uranium metal beds to sorb the T_2O generated by the Englehard catalyst rather than the more common zeolite molecular sieves. Depleted ^{238}U is available in quantity, and it reacts rapidly to produce UO_2 and UT_3. The tritium contaminated uranium is buried, and at no time is there direct handling of T_2O. Their experience has been that during maintenance of the system, line breaks in pipes containing T_2O pose serious exposure risks to personnel. (SRP has specifically designed their process to minimize the risks from such breaks.) Their new facility is slated to have only metallic gaskets to avoid tritium degradation of elastomeric gaskets and the resulting contaminated waste products.

4.1.7 Ontario Hydro

Ontario Hydro[14] has different problems from those previously described, with its heavy-water-moderated nuclear reactor stations;

however, they have an air cleaning system similar to the ERS. It is designed to recover tritium from releases to room air at flow rates of 1000 scfm (28,300 L/m) with 99.9% removal of airborne tritium per pass. They also have a smaller glove box clean-up system which treats tritium escaping from process piping into an inert Argon glove box atmosphere. Both systems were designed by Koch Process Systems of Westborough, Massachusetts. One feature, which differs from the typical United States systems, is their use of demineralized light water swamping to the molecular sieve drier operation. This operation consists of feeding large quantities of light water (H_2O) to the sieves. It is believed to improve the efficiency of the sorbents; however, SNL[15] and other experience[16] has not confirmed its utility in such processes, and it results in increased waste volume.

4.1.8 Brookhaven National Laboratory (BNL)

BNL, which handles relatively small quantities of tritium, has in place a unit using a hot CuO catalyst to oxidize the tritium gas and collect the T_2O on a silica gel drying agent. The process, known as the Picker Nuclear Instrument Model 199 Tritium Scrubber, is no longer commercially available. It treats vacuum pump exhaust gas only.

4.1.9 Princeton Plasmic Physics (PPP) Laboratory[17]

The PPP Laboratory is preparing to handle tritium inventories to 50 kCi and plans to use technology from Koch Process Systems to treat tritium vacuum effluents much as Ontario Hydro has done. This design has already been discussed. The wastes are slated to be sent to Hanford for burial. Their containment is of the fume hood variety.

5. DISCUSSION

While the tritium stack effluents at ORNL are high in comparison to other DOE institutions, they meet EPA standards; and there exists much available technology to reduce them further, within the costs which will be provided and also with some savings of valuable tritium, presently priced at around $1.00/Ci. To a very large extent, the tritium airborne

losses can be reduced by even more conservative operation and management of the facilities,[18] and effluents may be further reduced by the installation of equipment presently used at LLNL, their "crash cart," at one or both ORNL facilities. LLNL probably handles larger tritium inventories than ORNL (their exact extent is classified), and their present releases are around 1000 Ci/year to the atmosphere. A new, large-scale ($1,000,000) effluent recovery system to handle hood exhausts is under construction there to further reduce their present emissions which they consider unsatisfactory.[19]

Technological improvements also exist, at costs which will be provided, to improve monitoring and sampling of tritium stack effluents, to permit vacuum pump oil changes with reduced contamination, and to even eliminate the use of oil-sealed vacuum pumps. The first area which will be discussed is the management and operation of the tritium facilities, since it is believed that in this area the greatest benefits at lowest costs may be made.

One basic source of tritium losses is that which occurs, as noted earlier, due to incomplete sorption of tritium on the U-beds, owing to the helium blanketing effect. Data should be gathered to more accurately assess these tritium losses which presently travel through the vacuum pump to the stack. This can be done by taking samples of the tritium-helium overpressure above the U-beds after recirculating the LP-50 cylinder gas and then submitting them to mass spectrometric analysis for tritium content.

Tritium losses could also be reduced by modifying the current operating procedure at Building 3033 to increase the time provided to sorb tritium on the U-beds. Typically, a few minutes are provided, and this time may be lengthened to 0.5 h or more to make certain that the tritium is properly sorbed. The procedures should make a distinction among cylinders from SRP which have been held at ORNL for months from those held for days prior to their loading on the U-beds. Building 3033 experience helium and tritium overpressures of 10 to 15 torr (1.3 to 2.0 kPa), while Pinnelas[20] reports overpressures as low as 2 to 3 torr (0.3 to 0.4 kPa) after overnight recirculation of tritium over the U-beds. Their tritium cylinders are also loaded on U-beds within one week of

their receipt from SRP. Mass spectrums are routinely performed on the 2 to 3 torr (0.3 to 0.4 kPa) over-gas which is then sent to their effluent removal system to scrub any residual tritium. However, the metal bellows gas circulation pumps at Building 3033 may be inadequate to move gas at these low pressures.

J. DeVore of ORNL states that the reason that SRP cylinders are held (sometimes months) before U-bed loading is that, owing to delivery problems, cylinders must be ordered when available and held to meet demands. The tritium is not loaded on the U-beds immediately upon receipt because of a present lack of bed capacity and administrative regulations, which are outside the control of ORNL. Although the storage of tritium cylinders is not a major safety concern, the consequences of a cylinder rupture could be a large tritium release to the atmosphere, and thus long-term cylinder storage may not be prudent. The penalty of the present long-term tritium cylinder storage may be larger than the unavoidable releases of tritium to the atmosphere even with extended, overnight, U-bed circulation operations. However, the more conservative operation of the U-beds, a centerpiece to this present study, can probably largely alleviate the difficulties of storing the highly helium-contaminated tritium. Available literature on U-bed operations is sparse; however, Shmayda and Mayer[21] provide data which can give an approximate idea of the nearly exponential increase in the difficulty of loading a U-bed with increasing levels of helium contamination. Carlson[22] reports that blanketing of U-beds is a problem at levels as low as 0.5% helium, a quantity which can ingrow in two weeks after the tritium production at SRP. After recirculating the gas over the bed for 2 to 3 h, the remaining gas may still contain as much as 10% tritium according to his data. The small amount of tritium gas which remains after several hours circulation over the U-bed can then be sent to an ERS.

5.1 URANIUM BED EXPERIENCE AT OTHER LABORATORIES

Lamberger of Mound Laboratory reports[23] that their U-beds are never run at >80% of their theoretical (stoichiometric) capacity for tritium,

to accommodate inevitable losses of the bed capacity due to reaction with H_2O, N_2, and H_2 isotopes and to hasten the sorption operation. Usually, an hour or more is taken to load the beds from the SRP cylinders which, unlike ORNL, are processed as soon as possible after their receipt on-site. Circulation rates of 1 L/min are considered adequate. At helium contamination levels of 5%, the rate of tritium sorption is extremely slow, and a cryogenically cooled carbon trap is used to partially purify the helium-tritium mixture. In general, Carlson[24] states that 95 to 98% of the tritium in a SRP LP-50 can be loaded in 5 to 10 min; it is the last remaining amount which is difficult to sorb, and that could be a source for tritium loss from ORNL facilities.

Mound U-bed performance is enhanced by the addition of a ballast tank to the tritium-helium circulation system. A similar system is presently available at Building 3033 at ORNL. Carlson rejects the principle of sorbing helium-contaminated tritium on a U-bed without circulating the gas. "After ten days, 0.3% of the gas mixture is helium, yet this seemingly insignificant amount results in an almost unsurmountable (sic) problem in static purification systems. Therefore, a dynamic system is imperative."[25] He adds that, in addition to the U- or Pd-bed, a ballast vessel and oilless pump are necessary. Building 3033 has these features. It is frequently necessary to add additional helium or other inert carrier gas to the recirculating helium and tritium containing gas when the total gas pressure falls below 50 torr (6.7 kPa), because then the metal bellows pumps typically begin to fail to operate. The Normetex pump (described in Sect. 5.2.1) does not suffer from this problem.

Problems can arise in the transfer of tritium from one U-trap to another after a portion of the interstitial tritium has decayed to helium. In the latter event, the helium contained in the U-bed lattice will be released along with the tritium when the bed is heated. The helium will come off first, and it is possible to purify it from the tritium again by a suitable operating procedure. However, if purification is not done, then the resulting helium contamination can interfere

with the sorption of the released tritium onto a second U-bed. This information suggests that periodic regeneration of the U-beds to drive off helium may be needed.

Carlson noted that, after a U-bed has had repeated thorium-helium exposure, helium will seem to slowly evolve from the U-bed at room temperature. A new bed does not show this behavior. He asserts that the Mound experience is that U-bed sorption of tritium is optimized by cooling the bed during the process. The tritium sorption reaction (reaction 1, described in Sect. 3.1) is highly exothermic, and an equilibrium temperature can be reached at 400°C and 1 atmosphere (0.1 MPa) pressure. As a practical matter, that temperature is usually not approached; however, cooling the U-bed with inert gas (presently available) is a simple and useful technique to promote tritium sorption and is recommended for 3033 and 7025 U-bed operations. The periodic testing of the U-beds for the helium saturation problem is also recommended. When saturation is reached, the helium may be driven off and U-bed performance renewed by a high temperature heating or by bed replacement. An issue not investigated in this report is the U-bed internal design optimization.

5.2 NEW TECHNOLOGY

With the introduction of modest amounts of newer technology, undoubtedly further improvement in the tritium handling performance is quite likely. Useful technology exists, such as oilless vacuum and vacuum transfer pumps and as improvements to the present rotary oil-sealed vacuum pumps. More exotic and expensive techniques exist to further trap tritium effluents in addition to the aforementioned ERS. Developmental alternatives to the conventional U-bed will be discussed. A brief discussion of stack gas monitoring techniques at other laboratories will be given.

5.2.1 Vacuum Pumps

A combination of oilless vacuum pumps capable of evacuating chambers to 1 μm Hg (0.1 Pa) are in use in many tritium handling laboratories

in the United States and abroad. The Normetex scroll pump in series with two stages of metal-bellows pumps can achieve an absolute pressure of 0.1 to 5 Pa (0.75 to 37 μm Hg), which compares favorably with the capabilities of the currently used oil-sealed, single-stage, rotary-vane vacuum pumps, whose ultimate vacuum is usually around 5 μm Hg (0.7 Pa).[26] A typical pumping arrangement is shown in Fig. 6,[27] and pumping speeds of 4 L/s are attained. These pumps and configurations have been used for over 7 years at SRP, LLNL, and ORGDP with a very reliable service record. Their installation at ORNL could provide several different benefits. They could function as low pressure gas transfer pumps to return very small amounts of tritium (which are currently sent to the stack) from flexible hoses, pigtails, and line holdup to the SRP LP-50 cylinders for return to SRP. SRP has indicated that this is acceptable, provided no other contaminants such as hydrocarbon oils, oxygen, or nitrogen are present. These pumps may also permit recovery of the tritium heels in cylinders which are returned to ORNL from industrial customers and presently are sent directly to the 3039 Stack. Importantly, their use would eliminate the oil-sealed, rotary-vane pumps and their concomitant oil contamination, disposal problems, and personnel exposure risks. Their use would also permit recirculation of tritium-contaminated helium at very low pressures past the U-beds to remove tritium to the fullest extent possible. The currently used metal-bellows pumps are quite limited in this respect. Other labs around the country, as part of their renewal and upgrading of tritium handling operations, are moving to eliminate the oil-sealed, rotary-vane pumps as much as possible. In the past, urinalyses at ORNL have indicated tritium levels of 883 kBq/L in one unusual incident[28] with the worst contamination coming after pump oil changes. Procedures available to reduce the difficulty of, and exposure from, pump oil changes will be discussed in the next section. Scroll pumps have been used at the ORGDP for UF_6 and HF service, and are presently being tested by the Fusion Energy Division of ORNL. Unfortunately, their cost is quite substantial. The smallest version, the PV-12, is approximately $15,000 FOB shipping point. The metal-bellows (also oilless) backing pumps are ~$13,000 each and two are

ORNL DWG 87-11981

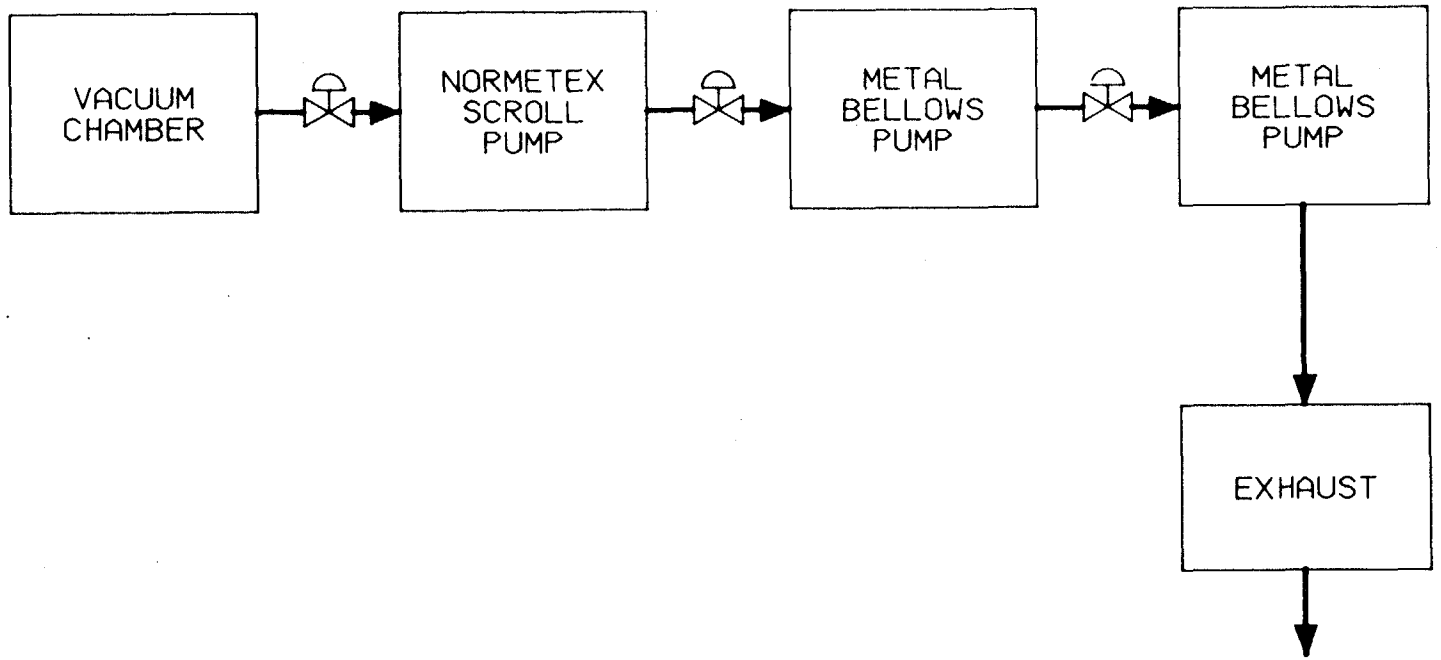

Fig. 6. Typical Normetex scroll pump arrangement with two-stage metal-bellows fore pumps.

required. All pumps are compact, however, and the total cost of the pumps would be $41,000 for each facility without installation and engineering costs.

Another vacuum pump which merits attention in this report is the Nova Magnetics, magnetically coupled, rotary-vane pump. It uses a polyphenyl-ether oil of very low vapor pressure which is claimed to be tritium compatible. The oil is sealed by labyrinth traps and recirculated. The pump has no shaft seal, being magnetically coupled, and should eliminate that particular tritium leakage problem. This pump is very versatile and can attain, like other rotary-vane pumps, high vacuum and high discharge pressures at high throughput in a single stage. It is popular at the Mound Laboratory where it was designed. However, it is not widely used at other tritium handling laboratories and has a less-well-known commercial history. It costs $23,000 Canadian, which is equivalent to $17,500 U.S. at late 1987 exchange rates. It would achieve an improved tritium handling capacity at a cost substantially less than the scroll-pump system; however, periodic, though possibly less frequent than now, oil changes would still be required. But, a difficulty may well exist with the levels of oil contamination it would produce in the purified tritium product. It may be possible to overcome this difficulty with proper filtration, but a development effort will be needed.

5.2.2 Suggestions for Improvement of Rotary-Vane Vacuum Pump Operations

Several measures may be taken at present without the addition of costly equipment to mitigate certain vacuum pump problems. As indicated earlier, tritium can cause radiolytic degradation of the hydrocarbon pump oil necessitating its frequent replacement, depending on contamination levels. Therefore, periodic purging of the vacuum pump with an inert dry gas such as argon could prolong the life of the vacuum pump oil. Also, the oil presents disposal problems in addition to the current personnel exposure and contaminated waste production. The addition of a silica gel or molecular sieve trap in the exhaust line of the vacuum pump could reduce the T_2O losses to the stack. It has also been suggested[12] that in-line tritium getters designed by Ergenics Technology

Corp., Wyckoff, New Jersey, consisting of nonradioactive alloys such as $LaNi_5$ or FeTi, might be useful in reducing tritium losses to the stack. However, this technology, while attractive, is still in the development stages. Organic materials such as 1,4-diphenylbutadiyne in the presence of a metal catalyst have been studied for their gettering of tritium in an oxygen atmosphere, but they are not in the commercial stages of development.[29]

Of the technology discussed, the first and simplest step is the periodic purging of the vacuum pump oil to lengthen its useful life. The second is the addition of chemical traps of silica gel in the exhaust of the current pumps. As a third step, the installation of the oilless vacuum pumps would be recommended. If their cost is prohibitive, then the Nova Magnetics pump is a possibility worthy of further evaluation. Oil changes need not be a serious problem as discussed in the next section.

5.2.3 Oil Changes

Since the worst personnel exposure is associated with the vacuum pump oil changes and alternative pumping technology is costly, technology has been developed to deal with oil changes. LLNL has designed a cart with carefully sealed piping, valving, and connections to prevent leaks which could obviously have serious consequences. The vacuum pump is modified to include valves and connecting fittings on its oil drain and addition lines. Separate hoses from the cart are then connected to the oil drain line and addition lines, and the used oil is pumped to a drum on the cart. The lines are then vacuum pumped to their ERS system, and fresh oil is added to the pump. The cart is carefully designed to prevent cross contamination between the old and new oil sections. A commercial version of this cart is available, in slightly altered form, from Metro-Line Industries, Inc., of Brea, California, for $6000. It features a vacuum pump to remove the last drops of oil remaining in the flexible connector with the objective of the prevention of human contact with the oil. Mound Laboratory has also developed a version of this equipment.

5.3 TRITIUM MONITORS

The accurate monitoring of tritium in vacuum and stack gas effluents is a difficult problem and is currently being addressed at ORNL. The following discussion provides information on experience at other DOE laboratories and may be useful to this current program. Tritium monitoring involves measurement of gas flow rates in ducts, the representative sampling of duct gas, and the detection of tritium in the sample. It is generally very important to distinguish between elemental tritium and T_2O because of the much greater hazards of T_2O. Two techniques are in wide use to monitor tritium in analytical quantities: (1) ion chambers which, in real time, measure the tritium concentration by the extent of gas ionization which is produced by the tritium beta decay, and (2) the oxidation of the tritium to T_2O followed by sorption on some solid or liquid, from which it is later stripped (if solid) or sent directly to a beta scintillation detector for counting. In most DOE laboratories, combinations of the techniques are used. The ionization chambers, which come in a variety of designs and makes, are generally used for more approximate measurements of stack activity and for the location of the sources of leaks. Alone, they are not generally considered sufficiently accurate to measure tritium stack losses and are used rather to monitor major losses and as a cross check of other sampling techniques.

The accurate detection of beta radiation by means of ionization chambers is difficult for several reasons. The detection chambers easily become contaminated to such an extent that differentiation between incoming tritium and tritium or tritium-containing compounds already present in the chamber becomes impossible. Even without tritium contamination, the chambers must be compensated for the presence of ionization which occurs due to cosmic radiation or radiation from other radionuclides.

The Overhoff ionization chambers in Building 3033 suffer from all of the above problems, and their data is unreliable. The replacement of a contaminated element does not solve the problem since the new element becomes contaminated quickly. In 1985, the tritium monitor, owing to

electronic problems, showed such a high background radiation reading that measurements of tritium effluents were meaningless. Problems have also been experienced with malfunctions of the velocity probe which is, of course, vital to a representative gas sampling. The dual chamber Overhoff ion chamber of Building 7025 is being re-evaluated as to its effectiveness; however, no data are yet available. Simple solutions are not available to the tritium stack gas monitoring difficulties.

Experiences at other DOE laboratories will be discussed for their possible relevance to ORNL. LLNL has found that a tritium air monitor manufactured by Berthold Nuclear Instruments, Coraopolis, Pennsylvania, has been very useful. It employs proportional counting techniques, rise time discrimination, microprocessor electronics, and claims a sensitivity to 0.5 nCi/m^3. It claims excellent tritium specificity in the presence of other gaseous radionuclides such as ^{85}Kr, ^{41}Ar, ^{222}Rn, and others and costs ~$16,000.

R. Jalbert of LANL also claims, in a 1975 paper,[30] to have developed an ionization chamber also capable of distinguishing tritium from other beta emitters by the use of a thin wall which is opaque to the tritium beta energy (0.018 MeV). This article also claims specifically that the design can measure tritium in the presence of ^{85}Kr. However, a commercial version of this instrument is not yet available.

5.4 EFFLUENT SAMPLING TECHNIQUES

Two similar techniques of stack gas sampling which do not employ ionization chambers are in use at LLNL and Mound among others. The first technique, in use at LLNL for quantitative assessment of tritium stack effluents, uses the conventional Pt-Pd catalytic process to oxidize tritium to T_2O, sorbs the T_2O on molecular sieves, and measures the gas flow rate. The contaminated molecular sieves are removed periodically, and the T_2O is quantitatively desorbed (with some difficulty) and monitored for tritium content by liquid scintillation. The second method, currently in use at Mound, is similar except that it employs a series of ethylene glycol $(CH_2OH)_2$ bubbler columns filled with $(CH_2OH)_2$. They are arrayed as shown in Fig. 7. The first row of

ORNL DWG 87-11980

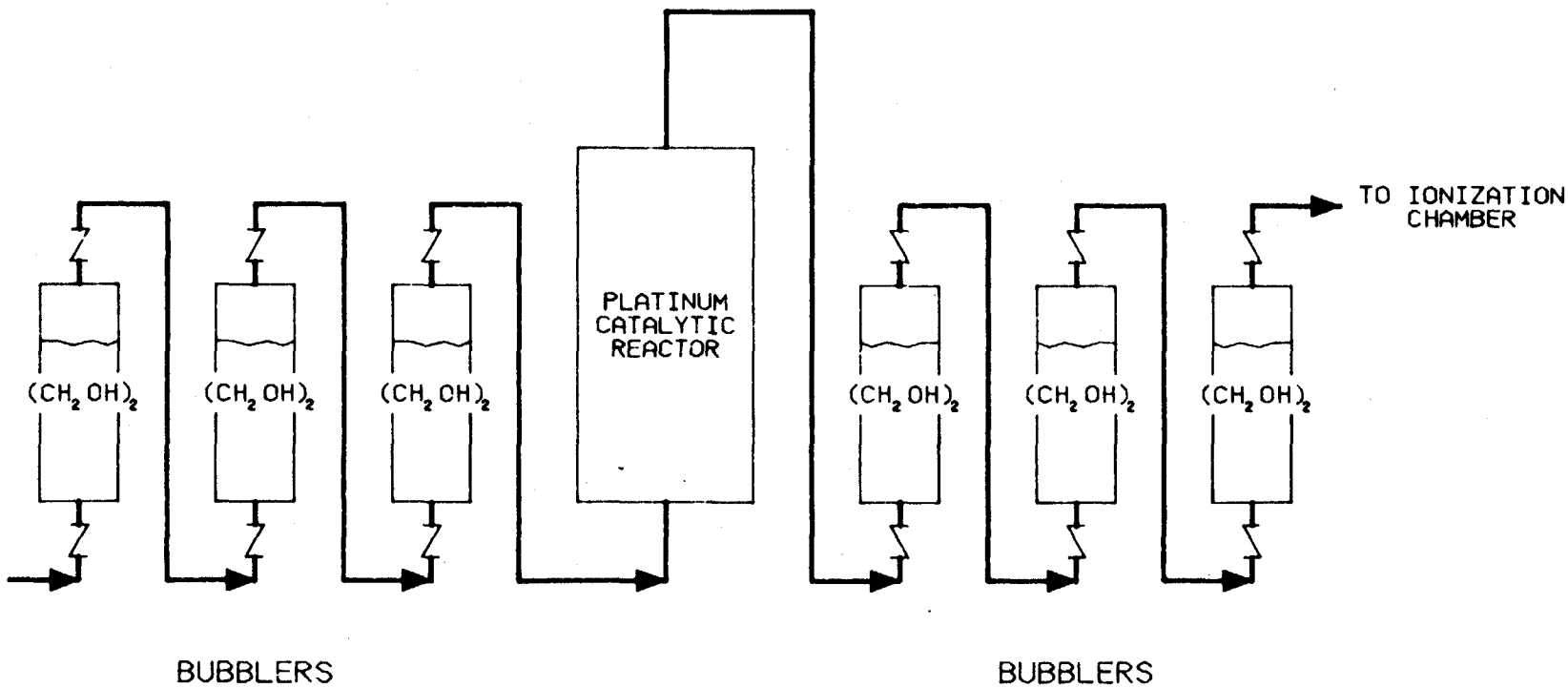

Fig. 7. Ethylene glycol bubbler stack gas sampler.

$(CH_2OH)_2$ columns will quantitatively absorb any T_2O in the gas stream. The second row, downstream of a conventional catalytic reactor (as used in the ERS) which generates T_2O, will absorb the T_2O thus generated. The $(CH_2OH)_2$ samples are changed quite frequently and again monitored very conveniently in liquid scintillation detectors. Therefore, it is possible to distinguish T_2O from tritium in the effluent stream quite accurately. The LLNL procedure, which uses molecular sieve beds instead of the $(CH_2OH)_2$, may be more common (less liquid handling problems), but it is generally more difficult and time consuming to quantitatively remove the T_2O from the solid sorbents, especially silica gels.

6. CONCLUSIONS AND DISCUSSION OF COSTS AND BENEFITS

ORNL tritium handling operations, Buildings 3033 and 7025, are difficult to compare to other DOE operations (because of the latter's classified tritium inventories) but, according to a survey of these laboratories, only the Savannah River Plant exceeds ORNL in stack gas effluents. Other tritium operations nationwide, even those much smaller than ORNL, without exception feature tritium effluent reduction systems (ERS) involving catalytic tritium oxidation, sorption of the oxide on solid materials, and disposal of the solids. Technology is available to ORNL in the form of a small-scale ERS (the "crash cart") to handle Buildings 3033 and 7025 effluents from the vacuum pump exhaust for a turn-key cost around $30,000, based on data from LLNL. Although it would be somewhat cumbersome, this unit might be transported for use at both ORNL facilities. In addition to this highly recommended ERS, it is the belief of outside consultants[31] that the present tritium losses from Buildings 3033 and 7025 can be considerably lessened with procedural changes, improved pumping equipment, and even more conservative U-bed operations as outlined within this report. These changes might also have the benefits of conserving valuable tritium as well as reducing the stack effluents. Tables 1 and 2 summarize the major new recommendations and their approximate costs.

Table 1. Buildings 3033 and 7025 tritium effluent reduction methods

Modification	Building 3033	Building 7025
Equipment and additions		
1. Oilless tritium recirculating pump	a	b
2. Installation of scroll pump system	b	b
3. Installation of small-scale ERS	b	c
4. Installation of tritium stack samplers	b	b
5. Installation of vacuum pump foreline chemical traps	c	c
6. Installation of Nova Magnetics pump	c	c
Operational		
1. Increasing tritium recirculating time on U-bed	b	b
2. Cooling U-bed during tritium sorption operations	b	b
3. Administrative changes to reduce LP-50 cylinder storage time[d]	c	c
4. Periodic purging of vacuum pump oil	a	a
5. Operational changes with scroll pump system addition	c	c
6. Regeneration of U-beds of lattice-held helium	b	c

[a]Existing.
[b]Recommended.
[c]Further study warranted.
[d]Currently such changes are under DOE authority.

Table 2. Approximate costs estimates for equipment additions

	Cost ($)
1. Oilless tritium recirculation pumps	13,000
2. Oilless scroll vacuum pump system	43,000
3. Small-scale ERS	30,000
4. Duct tritium samplers	No data
5. Vacuum pump foreline traps	No data
6. Nova-Magnetics oil filled vacuum pump (enhanced tritium compatibility)	17,500

Since no data were actually taken as part of this study, it cannot be definitively proved that the suggested modifications in U-bed operations will mitigate the ORNL difficulties. In the unlikely event that significant tritium losses are from the high exhaust flow in the Building 3033 containment hoods, then an inexpensive ERS or modified U-bed operations will be unlikely to fully correct these effluent problems. Technology is available, in the form of special expensive vacuum pumps, to provide better circulation of gas over U-beds and eliminate the contamination problems that result from the present oil-sealed, rotary-vane pumps. The combined cost of the necessary oilless pumps (two metal bellows pumps and one Normetex pump) to replace the vane pump is in the range of $41,000 without considering installation and engineering. Their useful lifetime, based on available data, suggests over seven years of service.

The reduction of tritium stack gas emissions according to the Environmental Monitoring and Compliance[32] group at ORNL will result in a proportional reduction in the average body burden at ORNL and surroundings. If this is not believed to be a significant health risk [i.e., 0.46 mrem (4.6 μSv) per year[33] in 1986], the justification for the costs in reducing emissions would be based on a desire to meet the standards of ALARA and to bring ORNL operations more in line with other DOE facilities. The use of the portable ERS, discussed earlier, results

in a negligible body burden to the operators, if properly operated. The tritiated water product from the small-scale ERS "crash cart" could be sent to Mound for recovery of the elemental tritium if an approved container could be found. Their present requirement is that the tritiated water be contained in a clay-like sorbent, rather than on the molecular sieves on which it would be held as product from the cart. SNL is presently sending their ERS product to Mound for recovery, and the feasibility of this operation at ORNL can be examined. Tritium-contaminated pump oil from ORNL is currently removed, sorbed on a clay-like material, and sent to burial. This solution is possible for an ERS-tritiated wastewater. Reliable containers, such as the UC-609, are available; however, to ship spent molecular sieves from an ERS to the Nevada Test Site (a more attractive alternative) is probably presently off-limits because of DOE requirements for on-site burial.

Maximum technician body burdens from tritium exposure at Mound and LLNL are of the order of 10 to 20 mrem(0.1 to 0.2 mSv)/year and compare to ORNL's current technician body burdens, if the same analysis technique is used in making those determinations. In other words, operating techniques, equipment, and personnel protection may be much more important variables in assessing the overall body burdens of technicians than the installation or non-installation of a small-scale ERS. Furthermore, the technology exists to cope with these wastes without endangering personnel and adding to their body burdens. If the major source of tritium release is from the fume hood, rather than the vacuum pump exhaust directly to the stack in either 3033 or 7025, then the small-scale ERS will be inadequate to stem losses. In this case, an improved secondary containment system such as a glove box may be the best solution. Data to answer these questions should become available when proper stack gas monitoring equipment is operational.

7. ACKNOWLEDGMENTS

This report, which discusses largely unpublished technology, relies heavily on personal communications, and I would like to thank many people for their help: J. DeVore, J. Gibson, S. Aaron, V. Turner, K. Daniels,

L. Youngblood, W. Ohnesorge, D. Ramey, and others at ORNL who provided indispensable aid. There are points in this report which are undoubtedly already familiar to people such as J. DeVore and J. Gibson involved in the actual operation. Without their aid, this report would have been impossible.

I would also like to thank representatives of other DOE facilities: P. Lamberger, J. Maienschein, D. Putz, W. Wall, R. Sherry, R. Spears, M. Newman, D. Carlson, C. Carter, J. Nasise, K. Hall, and others too numerous to name who have provided invaluable assistance in the preparation of this report.

8. REFERENCES

1. "Environmental Surveillance of the U.S. Department of Energy Oak Ridge Reservation and Surrounding Environs During 1986," Vol. 2: Data Presentation, Martin Marietta Energy Systems Inc., ES/ESH-1/V2, 1986.
2. "National Emissions Standards for Hazardous Air Pollutants," 40 CFR pt. 61, subpart H, published by the Office of the Federal Register, Washington, D.C.
3. Safety Analysis Report for Building 7025, ORNL Operations Division, ORNL/CF-84/318 (1985).
4. H. Amano, C. T. Garten, and R. D. Lomax, A Field Survey of Environmental Tritium in Areas Adjacent to ORNL Solid-Waste Storage Areas, ORNL/TM-10438 (1987).
5. G. Luthardt and H. Ebinger, "Practical Experience with Uranium Tritide Containers up to 50 kCi," Fusion Technol. 8, 2395, 1985.
6. P. Coronado, Lawrence Livermore National Laboratory, personal communication, 1987.
7. P. Lamberger, Mound Research Corporation, and J. Maienschein, Lawrence Livermore National Laboratory, personal communication, 1987.
8. T. B. Rhinehammer and P. H. Lamberger, "Selected Techniques for the Control and Handling of Tritium," Proceedings of the 23rd Conference on Remote Systems Technology, American Nuclear Society, San Francisco, California, 1975, p. 94.

9. A. E. Sherwood et al., Catalytic Oxidation of T_2 in or at Ambient Temperature, LLL-UCRL-52811 (1979).

10. W. R. Wall et al., "Control System for Sandia National Laboratories Vacuum Effluent Removal System," Proceedings: Tritium Technology in Fission, Fusion, and Isotopic Applications, American Nuclear Society, 1980, p. 360.

11. P. Gildea et al., Modification and Testing of the Sandia Laboratory Livermore Tritium Decontamination Systems, SAND 78-8647 (1978).

12. J. Maienschein, Lawrence Livermore National Laboratory, personal communication, 1987.

13. Black et al., Tritium Control Technology, WASH-1269, 218 (1973).

14. S. K. Sood et al., "Removal and Immobilization of Tritium from Ontario Hydro's Nuclear Generating Stations," Fusion Technol. 8, 2478 (1985).

15. D. Putz, Sandia National Laboratory, personal communication, 1987.

16. S. Tanaka, F. Ono, and Y. Takahasni, "Removal of Tritiated Water by Adsorption on Molecular Sieves — Effects of Coexisting H_2O," Fusion Technol. 8, 2196 (1985).

17. R. Siggingh, Princeton Plasmic Physics Laboratory, personal communication, 1987.

18. P. Lamberger, Mound Research Corporation, personal communication, 1987.

19. R. Sherry, Lawrence Livermore National Laboratory, personal communication, 1987.

20. M. Newman, Pinellas Plant, personal communication, 1987.

21. W. T. Shmayda and P. Mayer, "Uranium Beds for Tritium Storage," J. of Less Common Metals 104, 239 (1984).

22. R. S. Carlson, "The Uranium-Tritium System — The Storage of Tritium," Conference on Radiation Effects and Tritium Technology for Fusion Reactors, CONF-750989, IV-36, 1976,

23. P. Lamberger, Mound Research Corporation, personal communication, 1987.

24. R. Carlson, Mound Research Corporation, personal communication, 1987.

25. R. S. Carlson, "The Uranium-Tritium System — The Storage of Tritium," Conference on Radiation Effects and Tritium Technology for Fusion Reactors, CONF-750989, IV-40, 1976.

26. A. Roth, Vacuum Technology, Elsevier, Amsterdam, 1982.

27. D. Coffin, "A Tritium Compatible High Vacuum Pumping System," J. of Vacuum Science and Technol. 20, 4, 1982.

28. W. Martin, ORNL, personal communication, 1987.

29. H. Miller et al., "1,4-Diphenylbutadiyne as a Potential Tritium Getter," Proceedings: Tritium Technology in Fusion, Fission, and Isotopic Applications, American Nuclear Society, 1980, p. 208.

30. R. A. Jalbert, "A Monitor for Tritium in Air Containing Other Beta Emitters," Proceedings of 23rd Conference on Remote Systems Technology, San Francisco, California, 1975, p. 89.

31. P. Lamberger, Mound Research Corporation, personal communication, 1987.

32. W. Ohnesorge, ORNL, personal communication, 1987.

INTERNAL DISTRIBUTION

1. W. S. Aaron
2. H. L. Adair
3. J. T. Bell
4. C. H. Brown, Jr.
5. R. M. Canon
6. E. D. Collins
7. K. L. Daniels
8. J. R. DeVore
9. S. P. du Mont
10. P. W. Fisher
11. R. K. Genung
12. J. R. Gibson
13. K. W. Haff
14. J. R. Hightower
15. A. M. Krichinsky
16. T. E. Myrick
17. W. F. Ohnesorge
18. B. D. Patton
19. D. J. Pruett
20. D. W. Ramey
21. S. M. Robinson
22. P. S. Rohwer
23. T. H. Row
24. F. M. Scheitlin
25. J. A. Setaro
26-29. J. T. Shor
30. M. G. Stewart
31. J. H. Swanks
32. V. L. Turner
33. J. S. Watson
34. E. L. Youngblood
35-36. Central Research Library
37. Document Reference Section
38-39. Laboratory Records
40. Laboratory Records - RC
41. ORNL Patent Section

EXTERNAL DISTRIBUTION

42. Office of Assistant Manager, Energy Research and Development, DOE-ORO, P. O. Box E, Oak Ridge, TN 37831

43. C. Carter, G. E. Neutron Devices Department, P. O. Box 2908, MS-026, Largo, FL 34649

44. R. S. Carlson, Monsanto Research Laboratory, P. O. Box 32, Miamisburg, OH 45343

45. P. R. Coronado, Lawrence Livermore National Laboratory. P. O. Box 808, MS-L358, Livermore, CA 94550

46. C. K. Hall, G. E. Neutron Devices Department, P. O. Box 2908, MS-012, Largo, FL 34649

47. P. Lamberger, Monsanto Research Laboratory, P. O. Box 32, MS-T, Miamisburg, OH 45343

48. J. Maienschein, Lawrence Livermore National Laboratory, P. O. Box 808, MS-L358, Livermore, CA 94550

49. J. Nasise, Los Alamos National Laboratory, P. O. Box 1663, MS-C348, Los Alamos, NM 87545

50. M. G. Newman, G. E. Neutron Devices Department, P. O. Box 2908, MS-012, Largo, FL 34649

51. D. W. Putz, Sandia National Laboratory, P. O. Box 969, Division 8443, Livermore, CA 94551-0969

52. R. J. Sherry, Lawrence Livermore National Laboratory, P. O. Box 808, MS-L358, Livermore, CA 94550

53. R. E. Spears, E. I. du Pont de Nemours & Company, Savannah River Plant, Building 70345A, Aiken, SC 29808-001

54. W. Wall, Sandia National Laboratory, P. O. Box 969, Division 8443, Livermore, CA 94551-0969

55-64. Office of Scientific and Technical Information Center, Department of Energy, P. O. Box 62, Oak Ridge, TN 37831