Rep. No. 1810
(file in ALA)

ORNL-3941
UC-70 – Waste Disposal and Processing

STATUS REPORT NO. 6 ON

CLINCH RIVER STUDY

Editor
R. J. Morton

NOTICE

This document contains information of a preliminary nature and was prepared primarily for use by the Steering Committee and staff of the Clinch River Study. It is subject to revision or correction and therefore does not represent a final report. Quotations from this report or references to the information herein must not be made in open literature without written permission from the Chairman of the Clinch River Study Steering Committee (see p. vii).

OAK RIDGE NATIONAL LABORATORY
operated by
UNION CARBIDE CORPORATION
for the
U.S. ATOMIC ENERGY COMMISSION

ORNL-3941

Contract No. W-7405-eng-26

HEALTH PHYSICS DIVISION

STATUS REPORT NO. 6 ON CLINCH RIVER STUDY

Clinch River Study Steering Committee

EDITOR

R. J. Morton

CONTRIBUTING AUTHORS

S. I. Auerbach
P. H. Carrigan, Jr.
M. A. Churchill
K. E. Cowser
M. B. Fiering
B. J. Frederick
W. F. Johnson
C. P. McCammon
D. J. Nelson
F. L. Parker
R. J. Pickering
R. M. Richardson
E. G. Struxness
H. A. Thomas, Jr.

NOVEMBER 1966

OAK RIDGE NATIONAL LABORATORY
Oak Ridge, Tennessee
operated by
UNION CARBIDE CORPORATION
for the
U.S. ATOMIC ENERGY COMMISSION

TABLE OF CONTENTS

	Page
LIST OF FIGURES	v
LIST OF TABLES	vi
CLINCH RIVER STUDY STEERING COMMITTEE	vii
Current Membership	vii
Subcommittees of Steering Committee	viii
ACKNOWLEDGMENT	ix
FEATURES OF THE OVER-ALL PROGRAM	1
Introduction	1
Steering Committee Actions	4
Resume of Conclusions and Recommendations	10
Critique of the Clinch River Study	12
WATER SAMPLING AND ANALYSIS	18
Radionuclide Correlations in Water Samples from the Clinch and Tennessee Rivers	18
Automatic Water Sampling Stations for Use in Monitoring of Radionuclides in the Clinch River	24
RADIONUCLIDES IN BOTTOM SEDIMENTS	29
Monitoring of Radionuclides in Bottom Sediments of the Clinch and Tennessee Rivers	30
BIOLOGICAL PHASES	35
Recommendations of the Subcommittee	35
HYDROLOGIC MEASUREMENTS AND ANALYSES	42
Power Release Diffusion Study — Early Spring of 1964	42
SAFETY EVALUATION STUDIES	59
Opinions and Recommendations of the Subcommittee	59

	Page
COMPUTER SIMULATION OF THE FATE OF RADIOACTIVE WASTES IN STREAMS...	63
REFERENCES	73

LIST OF FIGURES

Figure		Page
1	Diagram of Principal Features of Automatic Water Sampling Stations	26
2	Sampling Station Installed near Melton Hill Dam	26
3	Schematic Sketch of Vane Deflection Meter for Use Near Gallaher Bridge	28
4	Components of Cam-Linear Potentiometer Subsystem for Monitoring Station Near Gallaher Bridge	28
5	Estimated Winter Discharge Pattern from Melton Hill Reservoir	44
6	Variation in Rhodamine-B Concentration with Time During Period March 31 to April 5, 1964 at Clinch River Mile 14.4	47
7	Variation in Rhodamine-B Concentration with Time During Period April 1 to April 6, 1964 at Clinch River Mile 5.5	47
8	Vector Diagram Flow of Water and Pollutant	65
9	Functions Interrelating Flows of Water and Pollutant	67

LIST OF TABLES

Table		Page
1	Correlation Coefficients for Comparisons of Radionuclide Concentrations at Downstream Stations with Radionuclide Concentrations at White Oak Dam	23
2	Correlation Coefficients for Comparisons of Radionuclide Concentrations at Selected Pairs of Water Sampling Stations	23
3	Minimum Dilution Factors for Peak Concentrations Observed at CRM 14.4 and CRM 5.5 and the Ratios of Peak Concentrations at these two Stations	52
4	Comparison of Predicted and Observed Times of Arrival and Peak Concentrations at CRM 14.4	52
5	Basic Data for Flow Routing, Showing Water Levels and Storage Volumes in White Oak Creek Embayment	53
6	Seasonal Minimum Dilution Factors and the Seasonal Ratio (Summer/Winter) of these Factors at CRM 14.4 and at CRM 5.5	57
7	Input Data for Four Season Model of Clinch and Tennessee Rivers	68
8	List of Pertinent Parameters for Figure 9	69
9	Intake Concentrations Due to Variation of Parameters	71

CLINCH RIVER STUDY STEERING COMMITTEE

Current Membership

E. G. Struxness, Chairman, Health Physics Division, Oak Ridge National Laboratory, P. O. Box X, Oak Ridge, Tennessee 37831

J. S. Cragwall, Jr., Water Resources Division, U. S. Geological Survey, 144 Federal Office Building, Nashville, Tennessee 37203

F. E. Gartrell, Health and Safety Division, Tennessee Valley Authority, 715 Edney Building, Chattanooga, Tennessee 37401

*H. M. Nichols, Tennessee State Game and Fish Commission, Cordell Hull Building, Nashville, Tennessee 37219

S. Leary Jones, Tennessee State Department of Public Health and Tennessee Stream Pollution Control Board, Cordell Hull Building, Nashville, Tennessee 37219

** A. G. Friend, Northeastern Radiological Health Laboratory, 109 Holton Street, P.O. Box 232, Winchester, Massachusetts

W. G. Belter, (ex officio), Division of Reactor Development and Technology, U. S. Atomic Energy Commission, Washington, D. C. 20543

*** J. J. Davis, (ex officio), Division of Biology and Medicine, U. S. Atomic Energy Commission, Washington, D. C. 20543

C. S. Shoup, (ex officio), Research and Development Division, U. S. Atomic Energy Commission, Oak Ridge Operations, P. O. Box E, Oak Ridge, Tennessee 37831

---

* Glenn Gentry retired October 1, 1965. Succeeded on Steering Committee by Hudson M. Nichols, Assistant Chief, Fish Management Division, TGFC.

** C. P. Straub succeeded A. G. Friend as a member of the Steering Committee effective August 1, 1963. A. G. Friend reappointed, replacing C. P. Straub, June 1966.

*** Succeeded Vincent Schultz as an ex officio member of the Steering Committee effective August 20, 1964.

Subcommittees of Steering Committee

Water Sampling and Analysis: M. A. Churchill (TVA), Chairman, J. S. Cragwall, Jr. (USGS), R. W. Andrew (USPHS), and S. L. Jones (TDPH). Staff Member: Wm. R. Nicholas (TVA).

Bottom Sediment Sampling and Analysis: P. H. Carrigan, Jr. (USGS), Chairman,* H. H. Abee (ORNL), R. W. Andrew (USPHS), J. W. Beverage (TVA), and T. Tamura (ORNL). Staff Member: R. J. Pickering (USGS).

Aquatic Biology: S. I. Auerbach (ORNL), Chairman, C. J. Chance (TVA), Wm. A. Brungs, Jr. (USPHS), and L. P. Wilkins (TGFC). Staff Member: D. J. Nelson (ORNL).

Safety Evaluation: C. P. McCammon (TDPH), Chairman, R. L. Hervin (AEC-ORO), O. W. Kochtitzky (TVA), W. S. Snyder (ORNL), and C. P. Straub (USPHS). Staff Member: K. E. Cawser (ORNL)

---

*R. M. Richardson (USGS) was chairman during calendar year 1964; P. H. Carrigan, Jr. served as chairman 1961-1963, and during and after 1965.

ACKNOWLEDGMENT

Essential parts of the work of the Clinch River Study were performed by a number of groups in the Oak Ridge National Laboratory and other agencies represented on the Steering Committee. The Committee has recognized and expressed appreciation for participation of the agencies and individuals named below.

STAFF INVESTIGATORS PARTICIPATING IN THE CLINCH RIVER STUDY

For the OAK RIDGE NATIONAL LABORATORY

Health Physics Division:

Applied Health Physics Section

H. H. Abee

W. D. Cottrell

Ecology Section

S. I. Auerbach

D. J. Nelson

Radioactive Waste Disposal Research Section

F. L. Parker

T. Tamura

K. E. Cowser

E. R. Eastwood

Instrumentation and Controls Division:

W. F. Johnson

C. D. Martin

For the U.S. GEOLOGICAL SURVEY, Water Resources Division:

R. M. Richardson

P. H. Carrigan, Jr.

R. J. Pickering

W. M. McMaster

B. J. Frederick

For the TENNESSEE VALLEY AUTHORITY,

Health and Safety Division:

M. A. Churchill

O. W. Kochtitzky

Wm. R. Nicholas

Forestry Relations Division:

Fish and Game Branch

C. J. Chance

Division of Water Control Planning:

Hydraulic Data Branch

J. W. Beverage

Engineering Laboratory

Rex A. Elder

For the U. S. PUBLIC HEALTH SERVICE, Division of Radiological Health: Robert A. Taft Sanitary Engineering Center

R. W. Andrew

A. H. Story

Wm. A. Brungs, Jr.

A. G. Friend

C. P. Straub

FEATURES OF THE OVER-ALL PROGRAM

Introduction

As explained in previous status reports,[1,2,3,4,5] the Clinch River Study was organized in 1959 as a cooperative project in the Oak Ridge National Laboratory. Four Federal agencies (TVA, USAEC, USGS, and USPHS), two Tennessee state departments (TDPH and TGFC), and the Laboratory (ORNL) were joint participants in the planning and administration of the study and in the relevant investigations and reports. The Clinch River Study Steering Committee, comprised of nine representatives of the participating agencies (see page vii), has been responsible for policy decisions, liaison among the agencies, and general administrative direction of the study program. The Steering Committee has also been responsible for releases of data and journal articles, issuance of a number of status reports (of which this is the sixth and last of the series), and final reports on the conduct and results of the study.

Active field and laboratory work on the Clinch River study was completed during the 5-year period from January 1960 through December 1964. During this time the Steering Committee held nine open meetings for progress reports, nine executive meetings for Committee discussions, decisions, and actions regarding conduct of the study, and three special meetings for consideration of unusual problems that had arisen. The details of each meeting were reported in the minutes of the meeting, and progress reports on the various study projects were summarized in the status reports referred to above.

A great many of the analytical laboratory results and data from field measurements were summarized in Status Report No. 5, because it covered a longer period than did the other status reports (more than one and one-half years), and also because it included earlier data that had been delayed in final revision and tabulation. Status Report No. 5 included the main body of the report (ORNL-3721),[5] and three supplements issued separately one with two parts, namely; ORNL-3721, Suppl. 1;[6] ORNL-3721, Suppl. 2A;[7] ORNL-3721, Suppl. 2B;[8] and ORNL-3721, Suppl. 3.[9] The present report (Status Report No. 6), covering the period of study from December 1, 1963 to December 31, 1964, is based mainly on progress reports presented to the Steering Committee at its meetings on December 15-16, 1964. Plans for completion of all of the reports on the study are mentioned later in the discussion of executive meetings of the Steering Committee.

The objectives of the study, adopted by the Steering Committee, were outlined in Status Report No. 3[3] and in various other documents pertaining to the study. The research aspects were concerned mainly with the radionuclides released through White Oak Creek, and with their dispersion, dilution, and distribution downstream in the Clinch and Tennessee Rivers. Early in the 5-year period of the study, the construction on Clinch River of Melton Hill Dam, 2.3 miles upstream from the mouth of White Oak Creek, was authorized and begun. It was realized that Melton Hill Dam, when in operation as a peaking power project, would cause significant changes in the dispersion and dilution of radioactive wastes released to the Clinch River. Therefore, the study comprised two phases: Phase I, studies of conditions before operation of Melton Hill Dam;

and Phase II, appraisal of conditions after Melton Hill Dam has been completed and put into operation.

The purpose was to define existing conditions in Phase 1, and to investigate the changes due to Melton Hill operations sufficiently to predict the conditions that will prevail in the future. There were delays in construction of the Melton Hill project and only a brief period was available for investigations after the dam was ready for operation. Several observations and tests of the changed conditions were made, however, particularly dye tracer tests, and these are summarized in Status Report No. 5 and the present report. The dye tracer tests, which simulated flow conditions when Melton Hill is in full operation, indicated that future conditions of dispersion and dilution can be predicted fairly closely by calculations based on data from earlier tests and the application of general hydraulic principles. It was apparent that with present discharges of wastes from the Laboratory the potential health hazards from radioactive releases are inconsequential.

Steering Committee Actions

During the period covered by this report, January to December 1964, the Steering Committee held a special open meeting on January 30, 1964,[10] an open meeting in two sessions' December 15-16, 1964,[11] and an executive meeting December 16, 1964.[12]

Special Meeting January 30, 1964.- Professor H. A. Thomas, Jr. of the Harvard Water Resources Group met with the Steering Committee and staff of the Clinch River Study for discussion of a systems analysis of Clinch River disposal of radioactive wastes. At this meeting Thomas explained a report "Operations Research in Liquid Radioactive Waste Disposal," circulated earlier to members of the Steering Committee, and also presented a preliminary model for investigation of the fate of radioactive wastes in streams. Professor Thomas discussed and answered a number of questions raised by members of the group. He believed, and the consensus of the group was, that the data from the Clinch River Study were adoptable to the methods of systems analysis and that such a study of data would be worth-while.

Open Meeting December 15-16, 1964.- The open meeting held during one and one-half days at ORNL was attended by a total of 40 persons. Most of the reports on the agenda were grouped in relation to the four subcommittees of the Steering Committee, namely, Water Sampling and Analysis, Aquatic Biology, Bottom Sedimen Sampling and Analysis, and Safety Evaluation. Also on the agenda were two papers by members of the Harvard Water Resources Group on Systems Analyses of Disposal of Radioactive Wastes in Streams, and a discussion by F. L. Parker presenting a critique of the Clinch River

Study and indicating several basic needs for a study of this kind.*

The subjects presented at the open sessions may be summarized as follows: 1. Progress Report No. 4 (Final), Subcommittee on Water Sampling and Analysis, December 15-16, 1964, by M. A. Churchill, Chairman; 2. Winter Power Release Diffusion Study, by P. H. Carrigan, Jr.; 3. Report of Subcommittee on Aquatic Biology, by S. I. Auerbach, Chairman; 4. Fish Sampling and Analysis, by D. J. Nelson; 5. Progress Report of Subcommittee on Bottom Sediment Sampling and Analysis, by R. M. Richardson, Chairman; 6. Radiochemistry and Geochemistry of Clinch River Sediments, by R. J. Pickering; 7. Inventory of Radionuclides in Bottom Sediments of the Clinch River, by P. H. Carrigan, Jr.; 8. Systems Analyses Applied to River Systems, by Myron B. Fiering; 9. Clinch River System Analyses, by H. A. Thomas, Jr.; 10. Progress Report of Subcommittee on Safety Evaluation, by C. P. McCammon, Chairman (presented by K. E. Cowser of the subcommittee staff); and 11. Evaluation of the Clinch River Study and Recommendations for Long-Term Monitoring, by F. L. Parker, Study Coordinator.

Several of the reports presented at the two open sessions are the basis for this report (Status Report No. 6); and some of these reports are summarized in the three supplements to Status Report No. 5, published separately. References to the supplements are cited in the introduction above, and the reports that are summarized in this report are indicated in the Table of Contents.

Executive Meeting December 16, 1964.- This executive session at ORNL was attended by all members of the Steering Committee except one (J. J. Davis), by the

*See pages 12 to 17 for a summary of Parker's critique.

chairmen of the four subcommittees, and seven members of the study staff. It was understood that all field work on the Clinch River Study was being completed by the end of the year 1964, and that this session was the last regularly scheduled meeting of the Steering Committee. It was essential that a number of Steering Committee actions be taken in order to complete arrangements for the remainder of the study and the reports on it.

The Steering Committee approved the completion of Status Report No. 5 to include revisions suggested by reviewers and issuance and distribution of the report as revised.

Acting on the suggestion of C. P. Straub, the Steering Committee instructed the secretary to remove Straub's name as a member of the Subcommittee on Water Sampling and Analysis and substitute the name of R. W. Andrew who has functioned as a member and has been responsible for much of the PHS cooperation with this subcommittee.

There was considerable discussion of proposed recommendations for long-term monitoring of radionuclides in the Clinch River and downstream. Suggestion of desirable monitoring programs was the fifth general objective adopted by the Steering Committee for this study.[3] A monitoring program of the scope and detailed coverage that had been outlined by some subcommittees would be costly and questions were raised as to its justification. It was emphasized that, in addition to assurance of radiation safety, continuing surveillance programs are essential: (1) for legal and public relations value, (2) to provide records of radionuclide discharges for future reference, and (3) for useful research and development information. The details of the discussion and the viewpoints expressed were summarized for the Steering Committee in the unpublished minutes of the meeting.

A revised outline of desirable monitoring measures was developed and approved during the committee meeting, but the Steering Committee felt that further revision and editorial review were needed. An ad hoc committee of four individuals was appointed to revise and edit the suggested outline of the monitoring program and also to draft a letter for transmittal of the suggested program to interested agencies, subject to final review and approval by the Steering Committee. On this committee, Chairman Struxness appointed: J. S. Cragwall, Jr., Chairman, F. E. Gartrell, S. Leary Jones, and F. L. Parker.

The Steering Committee took several actions on the matter of final reports on the Clinch River Study. In summary these were:

1. The Committee voted unanimously to authorize supplements to Status Report No. 5 to be issued separately with the same report number (ORNL-3721). These supplements would cover the material in the final progress reports by the Subcommittee on Water Sampling and Analysis, Subcommittee on Bottom Sediment Sampling and Analysis, and Subcommittee on Safety Evaluation (see page 2).

2. The Committee voted unanimously that Status Report No. 6 should be issued to cover any material presented at the meetings in December 1964 that was not included in the supplements previously authorized (see "1" above).

3. The desirability of a popular summary report was discussed. The development of such a report was authorized and arrangements for preparation, issue, and distribution were assigned to a publications committee as mentioned in "4" below.

4. A comprehensive technical report prepared as a final report on the Clinch River study was authorized. It was suggested that this report be published in a format that could be used by the agencies or groups that were concerned with the Clinch River study and would need copies for distribution. Possible means of publication in an attractive format and in sufficient numbers were discussed. A publications committee for the comprehensive final report was authorized to consider these questions, and on this committee Chairman Struxness appointed W. G. Belter, Chairman, Alfred Clebsch, R. J. Morton, C. S. Shoup, and C. P. Straub.

By motion the Committee decided that the same publications committee should explore the form and the means of publication and distribution of the popular summary report (see "3" above) and make recommendations to the Steering Committee about this report also.

5. The Steering Committee authorized designation of eight individuals as a group to begin work immediately on the comprehensive technical report, and as it was drafted to work also on the popular summary report. To constitute this group the committee voted to appoint: E. G. Struxness, Chairman, R. W. Andrew (subsequently diverted to another assignment), P. H. Carrigan, Jr., M. A. Churchill, K. E. Cowser, R. J. Morton, D. J. Nelson, and F. L. Parker.

A number of miscellaneous items of business were handled by the Steering Committee during the remainder of the executve session.

There was no objective to presentation of a paper by K. E. Cowser at the annual meeting of the Health Physics Society, based on the safety evaluation analysis which was a part of the Clinch River study.

With regard to future activities of the Steering Committee Struxness said that there had been some thought that the study might be completed by the time of the December 1964 meeting and the committee dissolved. Dissolution at that time was not considered advisable, and it was agreed that if a future meeting is necessary it will be held on call by the chairman of the committee.

Following a suggestion by the Subcommittee on Water Sampling and Analysis, the Steering Committee decided that use of proportional composite samples from the ORGDP sampling station by the National Water Quality Network (of USPHS) was desirable, and was informed that the PHS officer in charge was agreeable to this suggestion. The Steering Committee agreed that if and when the ORGDP sampling station is operational, Chairman Struxness should contact the officer in charge of the network and arrange for his group to receive samples collected from the Clinch River at this station.

Resume of Conclusions and Recommendations

Before the end of the Clinch River Study, each of the four subcommittees was requested to formulate and submit its conclusions, including recommendations regarding long-term monitoring (page 6) and future studies of the Clinch and Tennessee Rivers. These recommendations, in subcommittee progress reports, presented during the Steering Committee meeting December 15-16, 1964, are summarized in this status report (No. 6) or in supplements to Status Report No. 5.[5,6,7,9] (See footnote, this page.*)

The conclusions reached by the subcommittees and staff of the study have been developed in the progress of appraising the results obtained, planning for further work, and preparing progress reports for the Steering Committee. Interpretations of the results are given in the several status reports on the Clinch River Study, particularly in Status Report No. 5 and its supplements.[5,6,7,8,9] Brief accounts of the study with selected data and interpretations have been reported and summarized in the Health Physics Annual Progress Reports for the year ending July 31 in 1960, 1961, 1962, 1963, 1964, and 1965. In each of these annual reports a summary, report of results, and pertinent references are given under the title designation "Clinch River Studies". (See second footnote on this page.**)

*Specific references to available summaries of the recommendations by the subcommittee are as follows: (1) Water Sampling and Analysis, Reference 6, pp. 69-71; (2) Bottom Sediment Sampling and Analysis, this report (Status Report No. 6), pp. 30-34, and Reference 7, pp. 59-61; (3) Aquatic Biology, this report, pp. 35-41; (4) Safety Evaluation, this report, pp. 59-62 and Reference 9, pp. 99-100.

**References to these annual progress reports include: ORNL-2994 (1960) pp. 45-57; ORNL-3189 (1961) pp. 13-27; ORNL-3347 (1962) pp. 20-27; ORNL-3492 (1963) pp. 37-50; ORNL-3697 (1964) pp. 32-42; and ORNL-3849 (1965) pp. 18-23.

The conclusions and recommendations submitted by the subcommittees and staff of the study, as considered and accepted by the Steering Committee, are summarized in Chapter 8 ("Conclusions and Recommendations") of the final comprehensive technical report.[13] Chapter 1 of this final report (entitled "Summary of the Clinch River Study") comprises a more concise compendium of the conduct and accomplishments of this study program.

Critique of the Clinch River Study

At the open meeting of the Steering Committee on December 15-16, 1964, several of the discussions provided a summation of the recently completed field studies. The over-all evaluation by the Study Coordinator (mentioned earlier, pages 4 and 5) included a summary of strengths and weaknesses and of the successes achieved in the study.

Elements of Strength and Notable Deficiencies

The Clinch River Study as organized and conducted had many advantages and points of excellence that made it exceptional as a broad program of environmental research. However, the critical review also disclosed some noteworthy inadequacies for which the causes were known and which could be avoided in the future. These conclusions resulted from a searching review after the outcome of the study was apparent.

Elements of Strength

Among the many sources of strength that could have been mentioned, seven important features of the study were highlighted.

1. Long-Term Plan.--It was fortunate that the originators of the study (ORNL and AEC) had already developed a long-term plan and goal before beginning the investigation; and doubly fortunate that there were available the well-qualified staffs of the TVA, USGS, USPHS, TDPH, and other participating agencies who helped to study and perfect the plan.

2. Multiagency Organization.--The conjunction of six major technical and professional agencies in the study, with actual contributions of personnel time and ability, and responsible representation on the vital and specifically organized Steering Committee, was an element of strength which was essential for efficient and successful performance.

3. Definitive Coordination--The designation of a responsible study coordinator to act as the executive officer to a group of semi-autonomous subcommittees, maintaining the objectives and implementing the policies of the Steering Committee, proved to be a flexible yet efficient plan. It was conducive to freedom of investigation with a minimum of conflict with the basic policies and interests of the participating agencies.

4. Unified Headquarters and Convenient Conferences.--Operating headquarters of the study were maintained at the Oak Ridge National Laboratory and staffed by both regular and on-loan Laboratory personnel. Fortunately, offices of the participating agencies were located fairly close so that consultations and conferences could be held without entailing twoo much travel and inconvenience.

5. Full Acceptance of Research Concept.--Remarkable cooperation and unanimity of viewpoints among the agencies were achieved mainly because everyone concernec understood and agreed that the study was a scientific investigation, in which the facts would be determined first and conclusions drawn from the facts rather than from preconceived opinions.

6. Technical Accomplishments.--Throughout the study difficult technical problems were encountered and the various available resources and abilities were concentrated upon these problems to find the solutions. By searching for available techniques that could be adapted, and by innovation when necessary, numerous problems were solved in an acceptable way. One example of a strong technical feature was the mass-balance analyses of the data from the water sampling program. Over a period of two years and covering more than 160 miles of river, the mass balance helped to even out the usual discrepancies that occur in brief sampling periods and short study reaches. In addition, many discrepancies due to irregular rates of water travel could be compensated for.

7. Equipment and Instruments.--Another example of a strong technical feature was the adaptation and use of commercially available equipment wherever possible. The Swedish Foil Sampler, which was used to obtain undisturbed core samples of bottom sediments, and the use of commercial fluorometers to determine concentrations of dyes in tracer tests of dispersion in the river were only two of numerous examples.

Deficiencies

Some of the reasons for failing to realize full success in the objectives of the study are indicated by the following outline of some specific shortcomings.

1. Overlapping or Lack of Responsibility.--A main source of strength in a multiagency effort is the advantage of constant cross-checks and various points of view. This may be offset by administrative inadvertances or by lack of clear definition of the role of each agency. The latter was true in the Clinch River Study where important tasks were sometimes overlooked because responsibility was not fixed and defined, or because there were overlaps and some conflicts of purpose. In beginning the study, agreement was sought from each participating agency to limit itself to certain aspects and not to feel that it must participate in all phases of the work; for special reasons, however, some agencies did not limit their activities and maintain adequate coordination.

2. Neglect of Cross-Checks.--It is well-known from past experience that frequent chemical and radiochemical comparisions of separate analyses of duplicate samples of water and fish are essential for accuracy and comparability of laboratory results. Cross-checks of laboratory analyses were planned (as were also the cross-checks of responsibility mentioned in "1" above) but, in the course of active work with limited time, both administrative and technical cross-checks were

postponed and important discrepancies were later found to have occurred. Comparative cross-checks were delayed because it was assumed that the analytical laboratories would have comparable systems for control of accuracy and reproducibility, and also because of delays in completing analyses and reporting the results so as to allow prompt and continuing comparisons.

3. Underlying Mechanisms of Behavior.--The press of time and volume of work prevented adequate detailed investigations to explain the behavior of radionuclides in the river, that is, the basic mechanisms involved. Such studies involved, of course, extremely complex relationships in many instances, but the value of the study depended largely on the identification of controlling mechanisms and special efforts to define them.

4. Delays in Preparation.--The critique pointed out several instances in which limited results were obtained because of delays in preparation of such things as counting equipment, computer codes for sediment analysis, and proportional water sampling installations. These were provided and adjusted eventually, but after losses of time and data which could have been avoided by foreseeing the needs and starting preparations earlier.

5. Neglect of Long-Term Measurements.--Extending over a period of several years this study provided a unique opportunity to make long-term measurements of several parameters for which better definition is needed. One example among several was failure to obtain satisfactory temperature-depth measurements both upstream and downstream from the "duck-under" point when the Clinch River was stratified. Such data would be useful in studies of thermal pollution elsewhere and in tracing

the movement of specific radionuclides in the Clinch River. Another example mentioned was insufficient investigation of reasons for the distribution, sorption, and detection of the various radionuclides in the water, bottom sediments, and biota. Also, there was too little time for study of the changed regime of the Clinch River after Melton Hill Dam was in full operation.

6. Inadequate Public Information.--Another deficiency was lack of continuing educational publicity throughout the study, and too few scientific papers and journal articles published during the study period describing various aspects of the investigation and some of the results. There was a minimum of news releases, and relatively few talks and papers about the study during its progress.

Over-All Successes

The critique summarized the successes, and it was felt that they outweighed many times the shortcomings mentioned above.

1. Those responsible for the study and familiar with outstanding research in this field were confident that this was the first integrated comprehensive study of the dispersion and fate of radionuclides in a complicated river system where cooperative agencies having such a variety of special competencies had jointly brought them to bear on these complex problems. Furthermore, the investigations were made with detectable levels of radioactivity and a variety of hydrologic conditions. These circumstances favored determinations of the major phenomena involved in the dynamic behavior of the stream.

2. Mass-balance analyses were utilized to a greater extent than is usual in a river study. By this method it was shown without question that major proportions of the radioactive materials discharged through White Oak Dam passed downstream

relatively undiminished to Centers Ferry and to the Tennessee River beyond.

3. In this study more undisturbed cores of bottom sediments on the river bed were taken than in previous studies and were analyzed to determine the sediment reservoir of radionuclides. Also a technique was devised by which outside limits of the amounts of radionuclides tied up in the biomass of the stream and stream bed were estimated.

4. The study included a series of successful tracer tests to determine diffusion coefficients, times of travel, and mixing distances in the Clinch River with the Melton Hill Dam and power plant in operation, and from these tests there was developed and confirmed a theory of movement of radionuclides in a stream that is subject to pulsating power releases.

5. A noteworthy administrative accomplishment was the coordination and conduct of the study in such a way that four federal agencies, a federal laboratory, and three state agencies worked together in a friendly cooperative manner and, through the deliberations of the Steering Committee, reached unanimous agreement upon all scientific matters pertinent to the conduct and completion of this research.

In the critique of the strong and weak points and the successes of the Clinch River Study, the Study Coordinator (F. L. Parker) mentioned several other details to illustrate his conclusions. These details have been included in status reports and other releases of the results obtained and will not be repeated here.

WATER SAMPLING AND ANALYSIS

The essential purpose of water sampling and analysis in the Clinch River Study was to collect and interpret information concerning radionuclides suspended or dissolved in the waters of the Clinch and Tennessee Rivers; and to determine the stable-chemical quality of the surface waters involved in the over-all study. The basic program was planned, guided, interpreted, and reported by the Subcommittee on Water Sampling and Analysis. It included the collection of water samples at a network of sampling stations on the Clinch and Tennessee Rivers throughout a two-year period, radiological and stable-chemical analyses of these samples, and the processing and reporting of the analytical data. The final subcommittee report on the results of this program is available in Supplement No. 1 to Status Report No. 5.[6]

In addition to the basic program of the Subcommittee on Water Sampling and Analysis described above, studies by supplementary water sampling and special analyses of the data from the basic program were made by the staff at ORNL and by the PHS in Cincinnati. These supplementary studies have been coordinated with the work of the Subcommittee on Water Sampling and Analysis and reported in the previous status reports. Two such studies, which were reported to the Steering Committee at its meetings December 15-16, 1964, are summarized below.

Radionuclide Correlations in Water Samples from the Clinch and Tennessee Rivers

Data showing final results of the radiochemical anslyses of water samples collected over a period of approximately two years from White Oak Creek, the

Clinch River, and the Tennessee River were examined for mutual correlations between the radionuclides and for correlations of the radionuclides with stable-chemical constituents in the water. Some of the correlations found are given below according to the various water sampling stations. The pertinent correlation coefficients are shown in parentheses.

Station at White Oak Dam

Strong correlation (0.82) of the concentration of ^{90}Sr with pH in weekly samples of water passing through White Oak Dam suggests that ^{90}Sr may be associated to a large extent with suspended calcium carbonate. A weak negative correlation (-0.68) with dissolved aluminum suggests that the formation of aluminum oxide may be a mechanism by which ^{90}Sr is removed from White Oak Creek water in the manner suggested by Tamura.[14]

A strong mutual correlation (0.93) of ^{106}Ru and ^{60}Co suggests a common origin for the two radionuclides in the basin of White Oak Lake, and their correlations with the nitrate content of the water (0.75 and 0.80, respectively) indicate that they probably originated in high-nitrate seepage water from the intermediate-level waste disposal pits.[15]

The strong correlation of cesium-137 with conductivity (0.81) and with several of the minor chemical constituents in White Oak Creek water, and its lack of correlation with the content of ^{106}Ru, ^{60}Co, and nitrate, suggest that the origin of ^{137}Cs is not the same as that of the other two radionuclides. The content of suspended solids in the water samples was not determined but, on the basis of the distribution of ^{137}Cs

between suspended and dissolved solids in the samples,[6] it can be assumed that there would be a strong correlation between the concentrations of ^{137}Cs and suspended solids in the water at White Oak Dam.

Station at CRM 14.4

At Clinch River Mile 14.4 (CRM 14.4), ^{90}Sr and ^{106}Ru showed a mutual correlation (0.71) and also correlations with the concentration of iron in weekly water samples (0.65 and 0.75, respectively). Iron is believed to be present in the water mainly in the form of suspended ferric hydroxide, and the two radionuclides may be carried, in part, as adsorbed ions on ferric hydroxide particles.

Station at CRM 5.5

At CRM 5.5, ^{60}Co and ^{106}Ru showed a mutual correlation (0.74). This correlation was found also in samples collected at White Oak Dam but was not present at CRM 14.4 where samples were filtered before analyses were made. The observed relationship suggests that ^{106}Ru, and ^{60}Co may be associated with filterable suspended sediment in the water. The ^{137}Cs in the samples showed weak correlations with the concentrations of suspended solids (0.63), iron (0.65), manganese (0.56), amount of turbidity (0.62), and apparent color (0.57), components known to vary with the amount of suspended sediment contributed to the river by rainfall runoff.

Stations at Watts Bar Dam and Chickamauga Dam (TRM 529.9 and TRM 471.0)

No mutual correlations between the four most important radionuclides at TRM 529.9 or TRM 471.0 were found. Correlations between radionuclide concentrations and some stable-chemical components in the water samples are given below.

Background Sampling Stations

In samples from the station at CRM 41.5 there was poor correlation between the content of ^{90}Sr with ^{60}Co and ^{106}Ru (0.42 and 0.37, respectively). Also there was poor correlation of ^{90}Sr with the dissolved solids content (0.56) and with chloride concentration (0.53). There was no correlation of ^{60}Co and ^{106}Ru with dissolved solids. In monthly samples from the background station at Loudon (TRM 591.8) there was fairly good correlation of ^{106}Ru with turbidity (0.66), apparent color (0.66), centrifuged color (0.60), iron (0.66), suspended solids (0.51), and discharge (0.58) indicating that rainfall runoff is an important contributor to the ^{106}Ru content in Tennessee River water.

Interstation Correlation of Radionuclide Concentrations

The concentrations of ^{90}Sr, ^{60}Co, ^{137}Cs, and ^{106}Ru in samples collected at White Oak Dam were correlated with the concentrations at downstream stations. Results of the correlations are shown in Table 1. The correlations shown are for calculated discharge-weighted mean monthly concentrations. The use of mean monthly concentrations minimizes the effect of time of water travel on the correlations. There was good correlation of the ^{90}Sr and ^{106}Ru concentrations at White Oak Dam and farther downstream. Cobalt-60 also showed good correlation in the Clinch River downstream to CRM 5.5 but farther downstream neither ^{60}Co nor ^{137}Cs showed any correlation with the concentrations at White Oak Dam. It is believed that the poor correlations were due to low concentrations in the Tennessee River and consequent wide confidence limits, and to the sedimentation of the radionuclides along with their associated particles.

Correlation coefficients were also calculated for selected station pairs for the four principal radionuclides as shown in Table 2. Correlations between the two most downstream stations in each of the two rivers is good for ^{106}Ru and ^{90}Sr but poor for ^{60}Co and ^{137}Cs. There were poor correlations between cesium-137 and cobalt-60 concentrations in water samples from CRM 5.5 with these two radionuclides in samples from TRM 529.9 (Watts Bar Dam). This is probably due to low concentrations of ^{137}Cs and ^{60}Co in the Tennessee River water as has been suggested above.

Table 1. Correlation Coefficients for Comparisons of Radionuclide Concentrations at Downstream Stations with Radionuclide Concentrations at White Oak Dam

Downstream Station	^{90}Sr	^{137}Cs	^{60}Co	^{106}Ru
CRM 14.4*	0.64	0.69	0.80	0.58
CRM 5.5	0.65	-0.08	0.55	0.66
TRM 529.9	0.85	-0.26	0.02	0.51
TRM 471.0	0.62	-0.42	-0.13	0.49

*Analyses performed on supernatant after centrifugation of samples.

Table 2. Correlation Coefficients for Comparisons of Radionuclide Concentrations at Selected Pairs of Water Sampling Stations

Radionuclide	CRM 14.4; CRM 5.5	CRM 5.5; TRM 529.9	TRM 529.9; TRM 471.0
^{90}Sr	0.79	0.64	0.83
^{137}Cs	-0.06	0.23	0.59
^{60}Co	0.56	-0.05	0.48
^{106}Ru	0.92	0.65	0.92

Automatic Water Sampling Stations for Use in Monitoring of Radionuclides in the Clinch River

The results of dye tracer tests conducted in 1963 and in 1964 (discussed later, see page 42) showed that power releases at Melton Hill Dam will affect the distribution of radioactive wastes in the lower Clinch River. For short periods of time, dilution in the river may be 10 to 30 times less than median values observed before the construction of Melton Hill Dam.

Before power generation at Melton Hill Dam was begun there were only fourfold to fivefold variations in the concentration of radionuclides at the mouth of White Oak Creek. Farther downstream in the river these variations in concentration were almost completely attenuated.[16] Because of the small fluctuations in concentration with time, a very simple method of collecting representative samples of the river water was used.[17] Several samples were collected automatically each day at each station. From these, weekly composites were prepared so that the volumes of the daily subsamples composited were in proportion to the daily flows in the river.

With the change in flow conditions in the Clinch River, due to hydroelectric operations at Melton Hill Dam, a more sophisticated system of collecting water samples was recommended.[18] In this recommendation, it was suggested that the sampling equipment be fully automated so that water samples would be continuously collected in volumes proportional to the flow.

Two automatic water sampling stations have been designed and fabricated for use at a section in the tailrace at Melton Hill Dam and a section near the former site of

Gallaher Bridge. The sampling equipment has been installed and put into service at the site near Melton Hill Dam.

In Fig. 1, a block diagram schematically indicates the main features of the sampling stations. The pump is operated continuously in order to avoid freezing in the water lines and to prevent deposition of sediment particles. The pumping rate is such that particles smaller than 1 mm will be transported through the sampling lines. At a point in the discharge line from the pump, in the sampling station, a portion of the flow in the line is withdrawn by means of a solenoid valve. This solenoid valve is actuated at regular intervals such that a continuous sampling action is approximated, the duration of the valve opening being controlled so that the duration of the open time is proportional to the flow. The instrument that controls the duration of time that the valve is open is the Minneapolis Honeywell Circular Chart Recorder indicated in Fig. 1. This recorder will actuate the solenoid as frequently as every 15 seconds, but such frequent sampling would result in the collection of extraordinarily large samples for normal flow conditions. Therefore, a sampling rate selector (see Fig. 1) was included in this system to allow the frequency of sampling to be varied from 15 seconds to 100 minutes. The normal sampling frequency will be 15 minutes which will result in the collection of about 5 gallons of sample per week.

A photograph of the sampling station near Melton Hill Dam is shown in Fig. 2. At this station, the electrical signal necessary to actuate the recorder is obtained from the output signal for the turbine flow meters in the powerhouse. This signal is directly proportional to the flow.

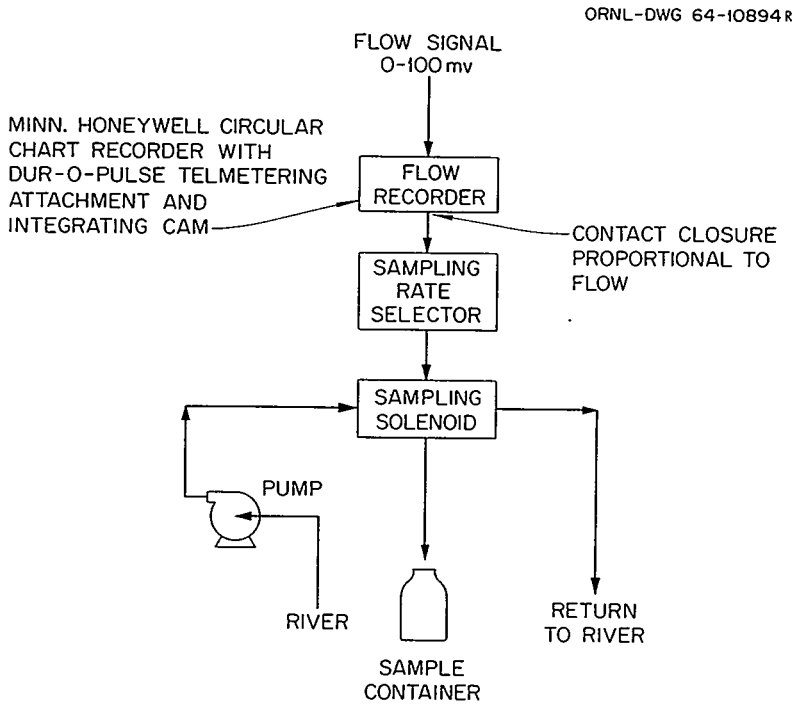

Fig. 1. Diagram of Principal Features of Automatic Water Sampling Stations

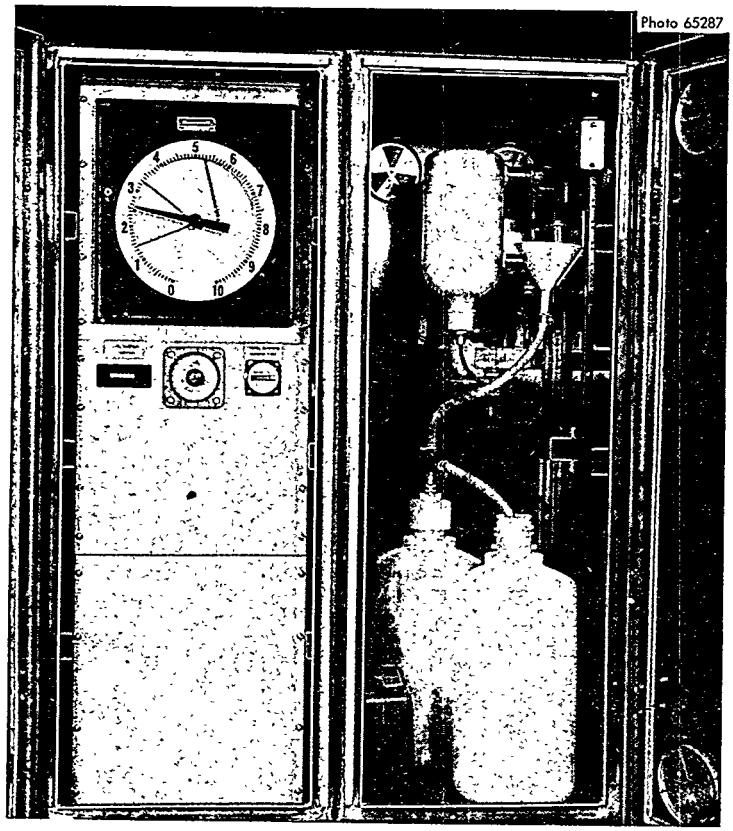

Fig. 2. Sampling Station Installed near Melton Hill Dam

For the station near Gallaher Bridge, a vane deflection meter will be used to measure the discharge. Actually, the meter measures a velocity, but the stage variations during fairly long periods of time at this site are negligible so that the measurement can be considered to represent the discharge. A schematic sketch of the vane deflection meter is shown in Fig. 3.

Unfortunately, the deflection of the vane is not a linear function of velocity. It was therefore necessary to design a special subsystem to generate a voltage directly proportional to flow. The components of this subsystem are schematically presented in Fig. 4. In this system the curvature of the cam, it should be noted, is adjustable. This feature was incorporated in the design to allow adjustments for changes in the relation between discharge and deflection. The curvature of the cam is such that the nonlinear response of the vane is converted into a linear response for the lever arm resting against the cam. The movement of the arm is transmitted mechanically by means of a chain and sprocket to a linearly wound variable potentiometer. By means of this potentiometer, a voltage signal which is proportional to the flow is developed to actuate the recorder in the main sampling station.

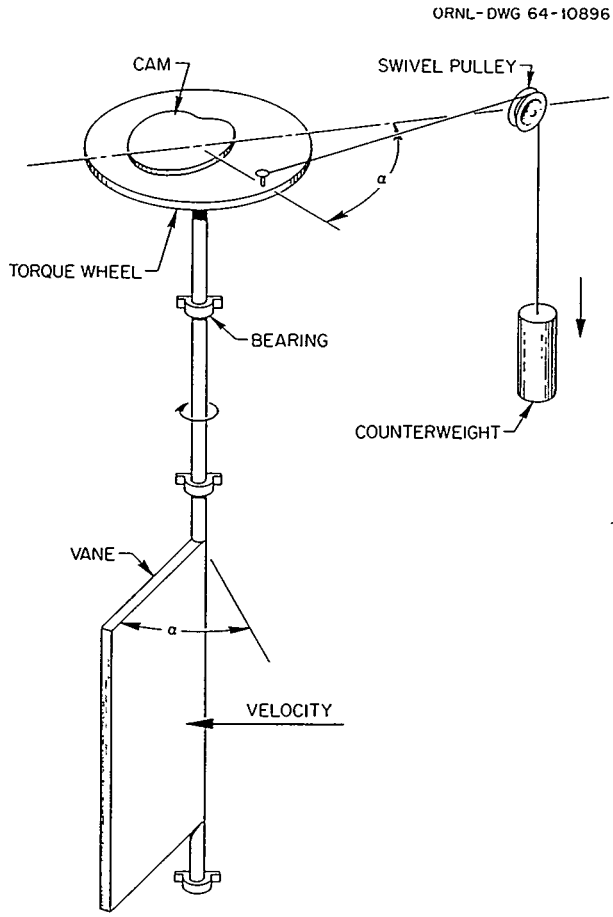

Fig. 3. Schematic Sketch of Vane Deflection Meter for Use Near Gallaher Bridge

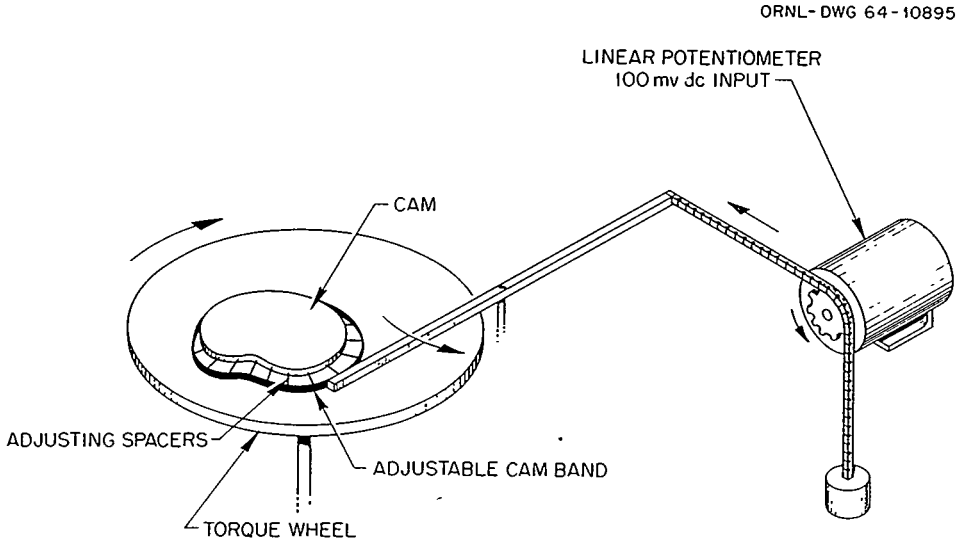

Fig. 4. Components of Cam-Linear Potentiometer Subsystem for Monitoring Station near Gallaher Bridge

RADIONUCLIDES IN BOTTOM SEDIMENTS

Extensive investigations of river bottom sediments were included in the Clinch River Study. The purpose was to obtain information on the distribution and behavior of radionuclides in the river system, and also to answer questions and provide reassurance regarding the possibility that large and hazardous amounts of radioactive materials might be accumulated and retained at the river bottom.

The sediment studies comprised surveys for measurements in situ of radiation emitted by the river bed, sampling and laboratory analyses of bottom-sediment core and dredge samples, and analyses of suspended sediments obtained by separation of the solid constituents in water samples. Also included were laboratory studies of the physicochemical characteristics of sediment materials and the behavior of the radionuclides associated with them. These studies involved determinations of various factors, such as particle size, mineralogy, physical and chemical properties, and desorption[5,8] of radionuclides from sediment materials by different liquids.

Specific aims of the sediment studies were: 1) to accumulate data needed to satisfy the five general objectives of the Clinch River Study,[3] and 2) to provide information which the Safety Evaluation Subcommittee could use in its assessment of hazards, if any, from radionuclides in the river system. The studies were also designed to determine the horizontal distribution of the radioactive materials within the sediments, develop a firm estimate of the quantities of fission products deposited

in the bed of Clinch River, describe the vertical distribution of radionuclides in the river-bottom deposits, and investigate the geochemical factors which influenced this distribution.

Results of the studies of radionuclides in sediments, mentioned above, have been made available in publications issued by the Clinch River Study Steering Committee. A summary of the entire program of sediment studies was given in Status Report No. 5 issued in October 1965;[5] and further details and specific data concerning this program were given in two supplements to Status Report No. 5, recently issued or in process of publication.[7,8]

As stated in previous reports, this work has been planned and guided by the Subcommittee on Sediment Sampling and Analysis. Accounts of the several sediment study projects have been given in progress reports of the Subcommittee which have been presented periodically at Steering Committee meetings. One other responsibility assigned to this subcommittee was to develop and submit advisory opinions and its recommendations regarding desirable measures for future monitoring of radioactive sediments in the Clinch and Tennessee Rivers. This final aspect of the subcommittee's work is included in this report as summarized below.

Monitoring of Radionuclides in Bottom Sediments of the Clinch and Tennessee Rivers

Early recognition of the needs and problems of monitoring radioactive materials in river bottom sediments, and continued responsible action by personnel of the ORNL Applied Health Physics Section have been of much value in the Clinch River Study. They have provided suitable data for defining the variations of the fission-product content in upper portions of sediments in the Clinch and Tennessee Rivers.

From review of available monitoring data and the results from the Clinch River Study the Subcommittee on Bottom Sediment Sampling and Analysis recognized that radionuclide concentrations in sediments vary widely. Based primarily on its technical information, and as requested by the Steering Committee, the subcommittee formulated its conclusions and recommendations about sediment monitoring needs. These recommendations, submitted to the Steering Committee on December 15, 1964 as a considered group opinion, are outlined below. Some brief explanations are also included to clarify the intent and scope of a desirable monitoring program as visualized by the subcommittee.

1. Monitoring of the radionuclides in bottom sediments in the Clinch and Tennessee Rivers should be continued on a reduced scale as long as radioactive materials are released in wastes discharged to the Clinch River and for a limited time thereafter.

In studies by the ORNL Applied Health Physics Section, radioactivity of bottom sediments above background levels has been observed in sections of the Tennessee River progressively farther downstream from the mouth of White Oak Creek. For ethical, legal, and scientific reasons, some information on radionuclides in bottom sediments should be collected as long as releases of radioactive materials to the Clinch River from White Oak Lake or other sources at ORNL can be shown to have a significant influence upon accumulations of radioactive river-bottom deposits.

It is recognized that in the future releases of radioactive wastes directly to White Oak Creek or to waste disposal facilities that might contaminate the river

below ORNL may be discontinued. However, some amounts of radionuclides will remain stored in the soil and other parts of the ORNL area and therefore it is suggested that monitoring programs should continue after releases have been stopped until such time as the level of radioactivity in White Oak Creek has dropped below a prescribed limit of concentration.

For more than 13 years annual observations have been made during sediment surveys by the Health Physics Division at selected sections in the two rivers. Results of the survey in 1961 indicated that the contamination of bottom sediments by radionuclide releases from White Oak Lake had extended in detectable quantities to the mouth of the Tennessee River near Paducah, Kentucky.

2. It is suggested that primary stations in the river monitoring network should be the water sampling station at White Oak Dam (or other control works near the mouth of White Oak Creek) and at the tailrace of Melton Hill Dam (or other upstream station between White Oak Creek and Melton Hill Dam).

Recent sediment studies by personnel of the Clinch River Study indicate that changes in the gamma radioactivity of the bottom sediments are directly related to changes in the quantities of radionuclides released from White Oak Lake.

The contribution to the total load of radionuclides in the Clinch River from sources upstream from the mouth of White Oak Creek is appreciable. If the radionuclide releases from White Oak Lake continue to decrease, the proportion of the natural and fallout radionuclide contributions from upstream as compared to

the total load in the river will become more significant. Therefore, the river monitoring system should be designed to differentiate contamination from White Oak Creek and from upstream sources.

3. In the opinion of the subcommittee, present procedures for the monitoring of radionuclides in the bottom sediments as used by the ORNL Applied Health Physics Section are satisfactory. After operations at Melton Hill Dam are established and there has been time for changes in the pattern of longitudinal distribution of radionuclides in sediments to occur, surveys should be made to determine the new pattern of longitudinal distribution. If power releases from Melton Hill Reservoir are affecting the distribution of radionuclides, the Applied Health Physics Section should be responsible for necessary modifications of its procedures in order to define their effects.

4. The methods now in use, such as flounder surveys and sediment sampling and analysis procedures, should not be considered standard but should be updated to include newer techniques that may be developed for determination of radiation levels *in situ* and of radionuclide concentrations in sediment samples. Also, as outlined below, modifications in the frequency of sediment surveys downstream and in the selection of cross sections for such surveys were suggested:

a. For annual surveys during the summer months it was recommended that the sections at CRM 21.5 (background), 16.3, 14.0, 11.0, 8.0, 5.8, 4.7, and 1.1 in the Clinch River, and in the Tennessee River at TRM 570.8 (background), 562.7, 552.7, 543.8, and 532.0 (Watts Bar Reservoir) should be considered.

Background determinations in Fort Loudoun and Norris Reservoirs should be continued. Higher concentrations of radionuclides have been found in bottom sediments from about CRM 16.3 to Watts Bar Dam (TRM 529.9) than elsewhere in the Tennessee River Basin. If hydroelectric operations at Melton Hill Dam should cause movement of the radioactive sediments, practically all such movement is expected to occur within this reach.

b. It is suggested that surveys be made at 5-year intervals during the summer months in the Tennessee River at TRM 24.6, 207.3, 261.3, 280.0, 354.4, and 491.9. Most of these sections are located at the Applied Health Physics survey site (used in previous years) nearest to the dam in Kentucky, Pickwick Landing, Wilson, Wheeler, Guntersville, and Chickamauga Reservoirs. Results of such surveys would indicate whether movement of radionuclides in the Tennessee River is continuing to occur downstream to the Ohio River. So long as such movement can be detected these river surveys should be continued at 5-year intervals. Surveys should not include reservoirs in which major changes are underway as for example, current construction of Nickajack Dam below Chattanooga. If feasible, the determination of bed profiles at monitored sections is suggested. This information will help in the interpretation of observed radiation levels and radionuclide concentrations.

5. The above recommendations should be considered in the light of current programs and policies as they affect production and control of radioactive wastes and their potential consequences. The necessity and feasibility of the various surveillance activities should be reviewed periodically and the sediment monitoring program readjusted as necessary.

BIOLOGICAL PHASES

Collection and analysis of fish and other aquatic organisms were included from the beginning of the Clinch River study in 1960. The data obtained on the biological phases of the study were summarized in the series of status reports, the last of the available data being included in Status Report No. 5.[5] The biological data relevant to radiation exposures were turned over to the Subcommittee on Safety Evaluation for use in the preparation of Supplement No. 3 to Status Report No. 5.[9]

At the meetings of the Steering Committee December 15-16, 1964 the report of the Subcommittee on Aquatic Biology was devoted to recommendations submitted to the Steering Committee.[19] The subcommittee gave its opinions regarding (1) desirable activities for a continuing program of biological monitoring in the creek and river system; and (2) the need for additional research studies by sampling and analysis of biota in surface waters. It was the consensus that periodic monitoring of fish is advisable; and also that investigations should be continued as feasible for further insight regarding biological effects of radioactive contaminants in the river system. These were suggested as a group opinion for consideration by the Steering Committee.

Conclusions of the Subcommittee

Fish Sampling and Analysis

The subcommittee recommended a moderate program of sampling and analysis of fish. This would provide a more dependable basis for estimates of human radiation exposures through the river system and also serve as a means of monitoring and

surveillance of releases of radionuclides to the Clinch River. The specific conclusions of the subcommittee are outlined below.

1. Sampling of Game Fish.- The Laboratory should be responsible for collecting and analyzing white crappies from the vicinity of CRM 14.0 once each year. The sample for analysis should consist of the flesh of 10 fish specimens composited and analyzed for radionuclide content.

2. Commercial Food Fish.-The Laboratory should collect smallmouth buffalo from the vicinity of CRM 14.0 once a year for assay to determine radionuclide concentrations. The sample should be a composite of 10 fish specimens prepared in a manner to approximate use of fish by humans as food.

3. Fish By-Products.-Gizzard shad should be sampled and analyzed as the need arises. The subcommittee indicated that samples of this fish either will be collected by the State Game and Fish Commission and analyzed by the TVA or collected and analyzed by the TVA.

From its observations the subcommittee concluded that the food chain to man is a major mechanism by which radionuclides dispersed from the aquatic environment may cause human radiation exposures.

The subcommittee suggested that the Steering Committee consider how much of the assimilative capacity of a stream should be used for radioactive waste disposal. The workers responsible for waste management need to know the relationship between the maximum permissible intake (MPI) by humans and the dosage humans get from the river; and the fraction of this dosage that may be permitted in the water and still allow for a safety factor. For the river water the workers need to know the allowable percentage of MPI from river food chains, the allowable percentage from drinking water,

and the percentages allowable from other dietary items. Such guidelines also would be very helpful in analyzing the safety of radiation exposures through the river system.

By way of explanation of the recommendations regarding fish sampling and analyses, the subcommittee report included comments, and references to pertinent information. The subcommittee considered the results of the biological studies in relation to the objectives of the Clinch River Study. Of particular interest to the subcommittee were: the fate of radionuclides in the Clinch and Tennessee Rivers, the possible role of aquatic food chains in the movement of radionuclides from the environment to man, and the effects of radiation in the environment on fish and other organisms. Comments of the subcommittee about sampling of biota other than fish are included later under a separate heading.

The available evidence suggested that predatory fish are not higher in radionuclide content than the primary consumer species. Thus it appears that not all the radionuclides are concentrated as they move up the food chain. The concentration of radionuclides and the resultant levels of radioactivity in organisms depend on the concentration and specific activity of the radionuclides in the water, and the metabolic requirements of the organisms for each particular element and its isotopes.

The subcommittee did not consider it necessary to continue to sample fish for safety evaluation, because current levels of radionuclides in fish are far below the quantities that would cause concern. However, fish should be sampled periodically

from the viewpoint of information to the public. One purpose would be to provide a factual basis for answering questions regarding possible radiation exposures from game fish, in which there is great public interest. Also periodic sampling would reassure the public about commercial food fish, which are mainly bottom feeders and, therefore, are generally suspected of being contaminated.

The subcommittee recommended (see "1" above) that the white crappies be sampled once a year to ascertain levels of radionuclides in this species. The white crappie was suggested because: (1) the population is resident in the river throughout the year; (2) the species is abundant in the river; and (3) large numbers are caught by sport fishermen.

A greater percentage of the MPI is contained in bottom-feeding fish than in any other group. This is probably due to the inclusion of bone in minor amounts (small myoseptal bones between the muscles) in the samples prepared for analysis which contributes a significant portion of the ^{90}Sr found in samples of fish flesh. Because the smallmouth buffalo is abundant and is used as food by a large number of people it is recommended that this species be sampled annually in order to provide continuing information on radionuclide concentrations in rough fish. Also, this basis for determining trends in radioactivity patterns could be useful in relating future levels to past hisbory, and as public relations information.

Future plans of the TVA include promotion of additional use of fish for commercial products. Such industrial use would involve fish oils, pet food, fish meal, fertilizers, and livestock feeds. About all that these developments await is a more

efficient means of harvesting the fish needed. If fish by-products become important in the future utilization of aquatic resources, appropriate fish should be sampled and analyzed so as to ascertain radionuclide concentrations and potential radiation exposures. Any small rough fish might be used in such industrial operations, but the gizzard shad is recommended as the fish to sample. This species is abundant and is likely to be used in large quantities in a fish by-products industry.

Studies of Biota other than Fish

In its efforts to obtain definitive information during the Clinch River Study the Subcommittee on Aquatic Biology organized sampling studies of various aquatic organisms and other materials in the river system. To help in planning for any future Clinch River studies that might be conducted, the reports of the subcommittee, December 15-16, 1964, outlined materials other than fish that might be sampled and analyzed. The comments about these materials under eight subheadings are summarized below. In most cases the opinions of the subcommittee regarding the relative importance of the various materials are indicated.

The recommendations and discussion regarding the various kinds of river fish have been summarized in the preceding subsection. The subcommittee made no recommendations regarding irrigation of crops with river water because no experimental studies of this problem had been made. It was suggested that this potential pathway of radiation exposure should be considered by the Subcommittee on Safety Evaluation.

1. Organic Detritus— Organic detritus incorporated in river bottom sediments comprise 1 to 2% by weight of the surficial sediment layers. Since the radioactivity of this organic material is 2 to 3 times that of an equal quantity

of inorganic material, and since detritus is utilized for food by some aquatic organisms, it appears to be an important source of entry of radionuclides into the food chain. The role of organic detritus in the food chain seems important and is still being studied as part of the continuing program of ecology research.

2. Clam Shells.- No advantage would be gained by continued sampling of these tissues.

3. Clam Flesh.- Experimental data are not available concerning the metabolic turnover of radionuclides in clam flesh and, therefore, data from analyses of clam flesh obtained in the river would be difficult to interpret. However, with the introduction of the Asiatic clam, *Corbicula*, a potential food species is now living in the river. If these clams should become available as a commercial food item, they should be sampled for their radionuclide contents and laboratory experiments should be conducted to determine turnover rates.

4. Plankton.- The operation of the Bull Run Steam Plant and Melton Hill Dam may change the plankton populations downstream from White Oak Creek. Plankton populations would not affect the inventory of radioactivity in the river but they might alter the radionuclide distribution between dissolved and particulate phases in water samples. Water sampling and analyses would detect these changes.

5. Other Invertebrates.— Other invertebrates are not considered to be of any concern.

6. Birds and Mammals.— Birds and mammals living on the river are not thought to be of any concern because of small populations and limited human use of this resource. However, these organisms have not been sampled as part of the Clinch River Study.

7. Importance of Biota in the River System.- The concentrations of radionuclides in several organisms such as clams and aquatic diptera along with estimates of their abundance and biomass suggest that the biota are not significant either as vectors or as reservoirs of radionuclides.

8. Radiation Effects.- ORNL ecological studies of radiation effects on the natural population of *Chironomus tentans*[20] to date suggest that there are no permanent radiation-induced changes in the the population. New mutations do arise in this species, but these are eliminated by natural selection and are not passed on to future generations. The same genetic mechanisms may be operative in other species inhabiting the river.

HYDROLOGIC MEASUREMENTS AND ANALYSES

The basic purpose of the Clinch River Study was to obtain and interpret information about the behavior of radionuclides in the various phases of the river environment. Although research on hydrologic conditions was not a primary objective of this study, interpretation of the data obtained concerning radioactive materials in the river required both conventional and special evaluations of hydrologic factors. The U. S. Geological Survey (USGS) obtained the necessary data concerning these factors by routine observations and various special studies. Each of the five status reports previously issued[1,2,3,4,5] has included summaries of USGS activities and of newly-acquired data relative to hydrologic conditions.

During the period covered by this status report, December 1, 1963 to December 31, 1964, the USGS continued to provide data for the Clinch River Study. However, this program was on a diminishing scale in the latter part of 1964 and the routine cooperative activities of the USGS are not covered in this report. One special investigation is included, namely, a diffusion study of the effects of Melton Hill Dam under winter conditions, made in 1964 for comparison with similar dye diffusion studies under summer conditions in August 1963. This study, made jointly by the USGS and ORNL, is summarized below.

Power Release Diffusion Study - Early Spring of 1964

Introduction

Appreciable changes in the flow regime of Clinch River when Melton Hill Dam is in full operation as a peaking hydroelectric power plant have been expected. Intermittent water releases from Melton Hill Reservoir cause rapid increases from no flow, or some intermediate

flow rate, to the maximum discharge of 18,000 cfs and, later, sudden decreases or cessation of flow in the river at the mouth of White Oak Creek. Such increases in discharge cause a rapid rise of water level in the river which acts as a control at White Oak Creek, stopping the creek flow into the river and causing upstream flow in the creek to White Oak Dam. A decrease or cutoff of a power release rapidly lowers the river level resulting in immediate and large discharges of radioactive waters from the creek into the river.[21]

If the release at Melton Hill Dam is completely stopped (no flow), waters released to the river from White Oak Creek stagnate and accumulate in the vicinity of the creek mouth. After the beginning of the next Melton Hill release, the accumulated contaminants are swept downstream as a discrete but gradually diffusing mass, and the upstream flow in White Oak Creek again occurs. These vagaries of the flow pattern below Melton Hill Dam affect the dispersion, travel, and concentrations of radionuclides in the creek and river and make more difficult the prediction of downstream conditions in the river system.

As reported previously[5] the effects of operation of Melton Hill Dam under summer conditions were studied by means of dye tracer tests in August 1963. The winter diffusion study in 1964, summarized below, was described in a special progress report to the Steering Committee December 15, 1964.[21] A paper in preparation will describe both the summer and the winter dye diffusion studies.* The estimated pattern of winter releases at Melton Hill Dam is shown in Fig. 5.

The dye tracer studies were designed to determine specifically the hydraulic effects of power releases from Melton Hill Dam in the Clinch River. With the advantage of this informatio

---

*Paper being prepared for publication by F. L. Parker, B. J. Frederick, and P. H. Carrigan, Jr.

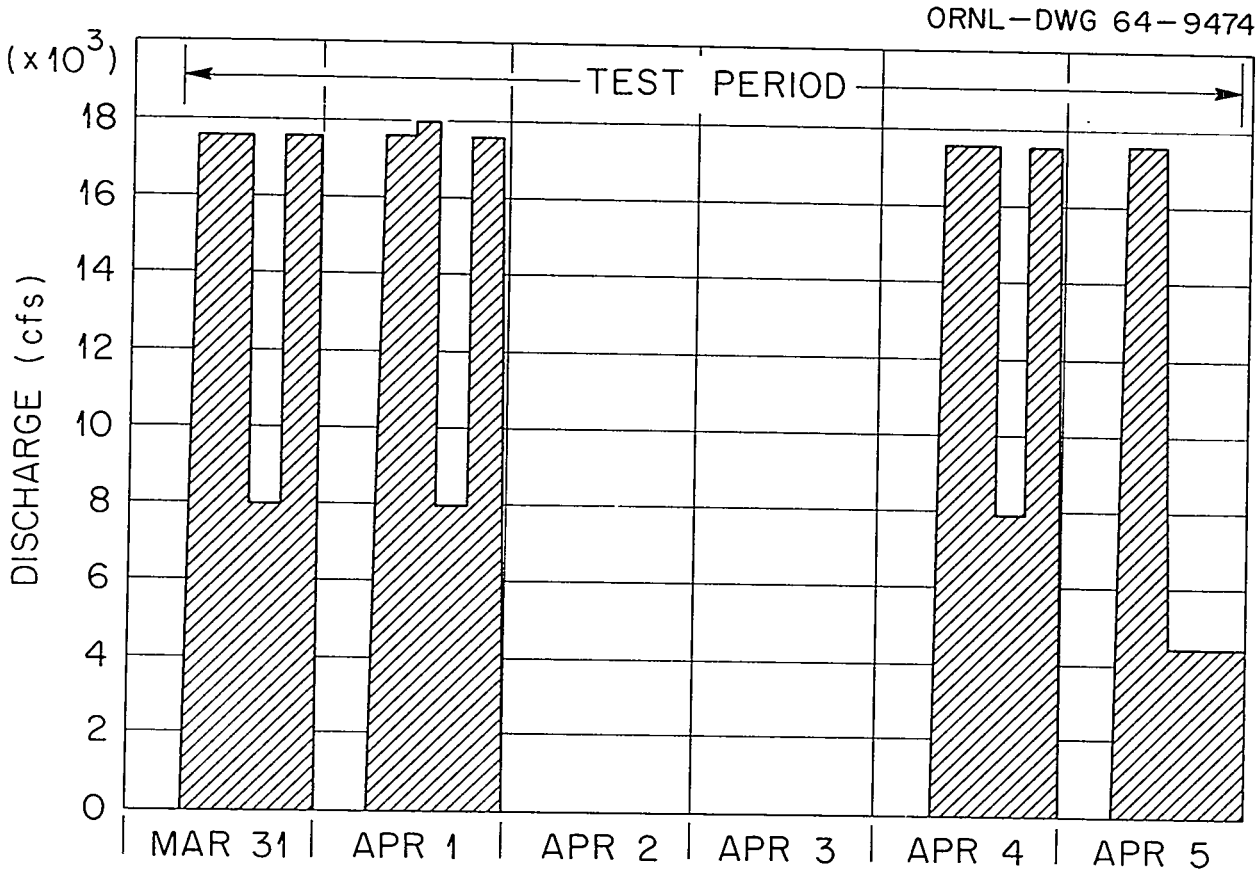

Fig. 5. Estimated Winter Discharge Pattern from Melton Hill Reservoir.

the purpose was to develop and verify general methods for predicting diffusion characteristics and downstream concentrations of contaminants in other streams affected by power releases as well as in the Clinch River. The immediate concern was to measure conditions in the Clinch River under winter conditions and compare the results with the findings of the summer studies. However, the most lasting and important outcome of the tests might well be further verification of methods used to predict the dye concentrations in the river at selected stations downstream from White Oak Creek. Such methods were first developed as a part of the dye diffusion studies in 1963.

The week-long dye tracer study in August 1963 included 5 days of typical power releases at Melton Hill dam and a weekend shutdown near the middle of the 7-day period with no power releases for 55 hours.[5] The methods of study and the results observed under summer conditions were of general as well as local interest. Some of these results for which comparative data from winter studies were desirable are outlined below.

1. Results of the summer study clearly indicated that the highest peak concentrations of contaminants throughout the lower Clinch River resulted from accumulation of contaminants during the prolonged shutdown of power releases during the weekend period. This was expected to be true under other conditions but it needed to be confirmed generally.

2. With Melton Hill power releases in summer the effective dilution of White Oak Creek effluents in Clinch River at CRM 14.4 was reduced by a factor of about 10 as compared with a median dilution factor of 570 for the period 1950-1960.[3] The investigators believed that the dilution factors would be further reduced with power releases under winter flow conditions but needed data to verify this opinion.

3. The velocities of flow in Clinch River below Melton Hill Dam when subject to power releases were much higher in the summer study than before the dam was in operation. Under the conditions of TVA reservoir operation in winter, water levels in the Clinch River embayment are lower and cross-sectional areas are less than in summer. Therefore, the winter study was expected to show even higher velocities and shorter times of mass travel of contaminants (tracers) than were found in the summer study.

4. In the 1963 summer studies, predictions were made by using a tidal flow analogy in order to calculate the discharges from White Oak Creek, and the arrival times and peak concentrations of the dye tracer at several downstream points in the river. A comparison of the predicted concentrations with the observed values showed that the predictions were reasonably accurate. However, the method of prediction depended largely on empirical data. The winter study was expected to determine whether the methods of prediction were applicable under the different conditions, and to improve knowledge of the dispersion characteristics so that calculated predictions might depend less on empirical data and be more accurate and analytical.

Experimental Test Procedures

Test Period. - In the week-long summer diffusion studies of 1963 the highest peak concentration of dye occurred on Monday following the weekend shutdown of power releases. It was decided that a five-day release of dye would be sufficient for the winter tracer test since this injection period would permit observations of diffusion of the dye during weekdays as well as on the weekend, but would avoid repetitious observations on five analagous weekdays.

In order to define the behavior of dye releases in the river on weekdays as compared to the

weekend, the injection was planned to begin on a typical Thursday and stop on a Monday. Actually, however, for a more convenient work week, the equivalent of weekdays and a weekend was obtained by preparing for the test period on a Monday (March 30, 1964), beginning power releases and dye injection on Tuesday, simulating a 55-hour weekend shutdown of Melton Hill releases on April 2 and 3 (Thursday and Friday), and continuing the power releases and the observations and sampling to determine dye concentrations at downstream stations through Saturday and Sunday, April 4 and 5.[21] (See Fig. 6 and Fig. 7).

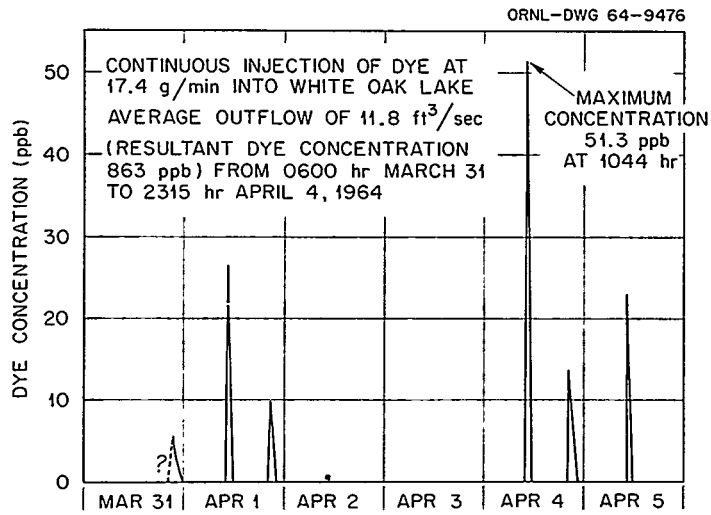

Fig. 6. Variation in Rhodamine-B Concentration with Time During Period March 31 to April 5, 1964 at Clinch River Mile 14.4

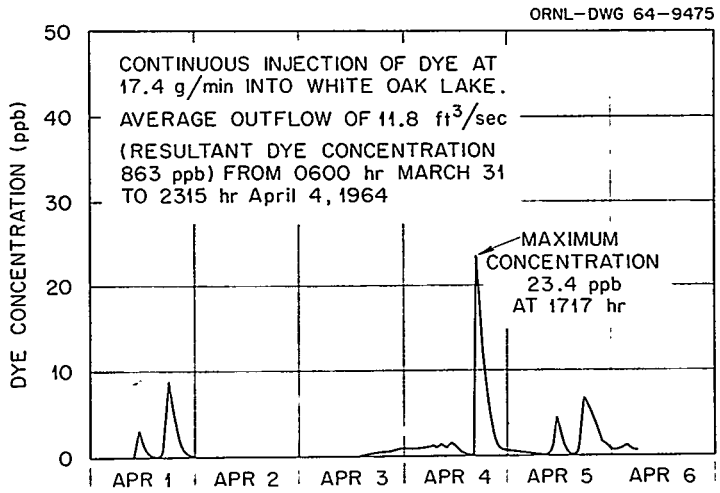

Fig. 7. Variation in Rhodamine-B Concentration with Time During Period April 1 to April 6, 1964 at Clinch River Mile 5.5.

Dye Releases.- At the time the winter tracer study was conducted, operation of the hydroelectric turbines at Melton Hill Dam had not begun. Information on the typical winter flow pattern and arrangements for the controlled releases from Melton Hill Reservoir were obtained through cooperation of the Division of Water Control Planning and the Division of Health and Safety of the Tennessee Valley Authority. The pattern of power releases shown in Fig. 5 was simulated through controlled releases over the spillway at the Dam.

Continuous injection of the tracer, the fluorescent dye Rhodamine-B, into the outflow at White Oak Dam began at 6 a.m. on Tuesday, March 31 and continued for 113.25 hours until 11:15 p.m. on Saturday April 4, 1964. The flow rate of the dye into White Oak Creek waters was practically steady during this 5-day period, being monitored at 2-hour intervals throughout the period and adjusted by means of the injection-control valve from time to time as necessary. The average flow rate of dye was 17.4 grams per minute. During the test period the mean flow rate in White Oak Creek at White Oak Dam was 11.8 cfs, and the mean daily flow ranged from 10 to 14 cfs.

The total weight of the 40% solution released during the 5-day period was 650 lbs which contained 260 lbs of dye. This was equivalent to a mean concentration in the White Oak Creek waters of 863 parts per billion (ppb) of the Rhodamine-B dye.

Observations and Measurements. Continuous measurements of dye concentration were made at two observation stations located at CRM 14.4 and CRM 5.5. These measurements were made by Turner Model 111 Fluorometers, each equipped with a high sensitivity flow-through door and a recorder. The Fluorometer is capable of reliable detection of dye concentrations of from less than 0.1 ppb to 30 ppb on full scale. When the concentrations

exceed full-scale capacity of the instrument, the range of sensitivity may be extended upward by factors of 10, 100, or 1000 by the insertion of optical neutral-density filters. On April 4, 1964 the concentrations at CRM 14.4 exceeded the full-scale reading of the instruments without filters, and neutral-density filters were inserted in the fluorometers at the two observation stations for periods of 2 hours or less on that day. The only filters available increased the range of the fluorometers by a factor of 1,000 and, although not as quantitative as full-scale measurements, use of the filters provided a qualitative picture of the variation of dye concentration with time. Grab samples of the water passing through each fluorometer were collected at 5-minute intervals during the periods when full-scale capacity was exceeded, and after completion of the test the determinations of dye in these grab samples helped to fill in missing values in the recorded concentrations. As a further check on the accuracy of the time-concentration curves for the critical periods of April 4, the mass of dye passing each of the observation stations was computed from the curves and it was found that the computed masses were in agreement with the quantities of dye released from White Oak Creek.

Water samples for radiological analyses were collected throughout the test period at 2-hour intervals from the overflow at White Oak Dam and during the time of dye passage at the two observation stations on the Clinch River. These samples were analyzed to determine the variation in radionuclide concentrations.

Water stage recorders were operated continuously on the tailwater at White Oak Dam, and in the Clinch River at the mouth of White Oak Creek, at CRM 19.1, and at CRM 14.5 Water stages were observed at regular intervals at CRM 5.5, providing an essentially continuous record of water elevations at this location throughout the test period.

Temperatures of the river water were measured at frequent intervals at the sections where fluorometers were in operation. The vertical distribution of temperature was determined in the section at CRM 5.5 several times each day during the test period. Operation of the fluorometers was begun on March 31 at CRM 14.4 and on April 1 at CRM 5.5. Due to operational problems with the pumping system at CRM 14.4 on March 31, complete definition of the passage of the first dye cloud was not obtained. Operation of the instruments was stopped on April 5 at CRM 14.4 and April 6 at CRM 5.5.

Results

Dilution of Tracer Cloud.- The variations in dye concentrations throughout the full period of operation at the two observation stations, CRM 14.4 and CRM 5.5, are shown in Fig. 6 and 7. In Fig. 6 is also plotted the predicted concentration corresponding with each observed concentration peak as shown in the figure. As mentioned earlier, the maximum concentrations of dye occurred during the passage of the large dye cloud that formed during the simulated weekend shutdown at Melton Hill Dam on April 2 and 3. The times and concentrations of these peak occurrences are indicated in the two figures.

At each station the minimum dilution factor occurred at the time of the peak on April 4, 1964. The minimum factor at CRM 14.4 was 16.8 and at CRM 5.5 was 36.9. This factor is the simple ratio of the mean concentration of dye released at White Oak Dam to the peak concentration at the observation section. The dilution factors for all peaks occurring at each station are listed in Table 3.

Between CRM 14.4 and CRM 5.5 the reduction in the maximum peak concentrations was about 2.2 to 1 (See Fig. 6 and 7.); and the reduction in concentrations for other peaks averaged about 3 to 1. (See Table 3.).

The effects of complete stoppage of discharge at Melton Hill Dam for more than two days are of particular interest. Close comparison of the time-concentration patterns given in Fig. 6 and Fig. 7 will show that the peak observed late in the evening on April 1 at CRM 14.4 did not reach the vicinity of CRM 5.5 until midafternoon on April 3. The mass was "stagnated" for much of the weekend somewhat upstream from CRM 5.5. Apparently the fairly coherent mass that passed CRM 14.4 on April 1 was greatly dispersed during weekend shutdown. This dispersed mass appears to have slowly drifted downstream, due perhaps to minor flow in the river, to the effects of river control operations at Fort Loudoun and Watts Bar Dams on the Tennessee River, or to the development of thermal stratification. In the process of this slow movement, the dye mass became more dispersed and the peak concentration was reduced. The mean values of the maximum concentrations that occurred on April 4 at the two observation stations, CRM 14.4 and CRM 5.5, were 8.54 ppb and 6.64 ppb, respectively. The corresponding mean dilution factors were 1,010 and 1,300, respectively.

Prediction of Time of Travel.- In a special report, prepared from TVA data in 1952,[22] the variation of time of travel with both discharge and water level in the Clinch River was given for reaches extending from the mouth of White Oak Creek to the mouth of the Emory River. Later in 1961 and 1962, Frederick and Carrigan verified the data in this TVA report by conducting radiotracer tests.[23,24] From knowledge of the discharges and levels occurring during the dye-test period it was possible to compute the predicted time of travel of the dye masses using the information given in the TVA report. A comparison of the predicted and observed times of travel and the peak concentrations at CRM 14.4 is given in Table 4.

Table 3. Minimum Dilution Factors for Peak Concentrations Observed at CRM 14.4 and CRM 5.5 and the Ratios of Peak Concentrations at these Two Stations.

Peak[a] Number	Mile 14.4		Mile 5.5		Radios of Peak Concentration CRM 14.4: CRM 5.5
	Date Observed	Minimum Dilution Factor	Date Observed	Minimum Dilution Factor	
1	Mar. 31	-	Apr. 1	310	-
2	Apr. 1	33.3	Apr. 1	95.8	2.87
3	Apr. 1	88.2	Apr. 4	608	6.89
4	Apr. 4	16.8	Apr. 4	36.9	2.19
5	Apr. 4	62.5	Apr. 5	192	3.08
6	Apr. 5	37.7	Apr. 5	130	3.45

[a]Peaks are listed in chronological order (see Figs. 6 and 7).

Table 4. Comparison of Predicted and Observed Times of Arrival and Peak Concentrations at CRM 14.4

Peak[a] Number	Time of Arrival (hour)		Peak Concentration (ppb)	
	Predicted	Observed	Predicted	Observed
1	-	b	-	-
2	1055	1045	26.9	25.9
3	2100	2056	8.5	9.8
4	1055	1044	53.0	51.3
5	2100	2049	11.4	13.8
6	1055	1049	15.9	22.9

[a]Peaks are listed in chronological order (see Fig. 6).
[b]Peak occurred before 2130 hours.

Prediction of Peak Concentrations. - The procedure for calculating predicted peak concentrations at CRM 14.4 may be considered as two distinct computational steps. First, the mass of dye injected from White Oak Creek into the Clinch River following each decrease in power release from Melton Hill Reservoir was determined. Second, the mass of dye injected into the river was routed downstream as a discrete pulse.

The computational operation used to determine the mass of dye injected into the river from the creek was somewhat similar to the method of analysis used to predict concentrations in the 1963 summer tests. This method of analysis was adapted from one used by Ketchum for tidal estuary mixing problems.[25]

A flow routing analysis, in this instance based on a tidal flow analogy, was necessary to determine the mass of dye released to the river because White Oak Creek embayment was never completely dewatered when there was a decrease in power release from Melton Hill Reservoir. (See basic data in Table 5.)

Table 5. Basic Data for Flow Routing Showing Water Levels and Storage Volumes in White Oak Creek Embayment.

Power Release (cfs)	Water Level[a] (ft)	Storage in Embayment	
		Gallons	Acre-ft
17,600	739.8	6.6×10^6	20.3
7,950	737.2	3.5×10^6	10.7
0	735.0	0.5×10^6	1.53

[a]Elevation above mean sea level of the water surface of the Clinch River at the mouth of White Oak Creek; these are nominal figures for the entire test period.

The principal difference in the routing procedure used in the winter dye-tracer tests and that used in the summer of 1963 was in the method of subdividing the volume of water in the embayment. In calculations for applying the tidal flow analogy under summer test conditions,[5] the embayment was divided by vertical planes into subreaches of equal volume. Also, it was assumed that: the dye was uniformly mixed with the water in each equal-volume subreach immediately prior to a decrease in power release; that there was no outflow from the creek into the river at this critical time; and that the mass of dye within each equal-volume subreach was a function of the injection rate of the dye, antecedent changes in storage in the embayment, and the rate of longitudinal movement of the water in these reaches. The rate of movement, horizontally, of these volumes was computed; and the number of equal-volume units flowing into the river was determined.

For the analysis of winter test conditions the method using vertical subdivision solely was found to be inapplicable. Therefore, the volume of water in the embayment was also divided into equal-volume, horizontally-lying strata. The rate of vertical movement of water level was computed, and then the number of equal-volume horizontally-lying units flowing into the river determined. This method of vertical-horizontal subdivision proved to be as accurate for the winter study as the vertical method of analysis was for summer flow conditions.

The method of routing the dye pulses downstream in the river to predict the peak concentrations at CRM 14.4 for winter flow conditions was an improved model of the method reported by Frederick, Parker, and Carrigan in 1963[21] for use under summer flow conditions. Both methods employed computational procedures. The method reported in 1963 related the observed peak concentration at CRM 14.4 to the mass of dye injected into the river for one

such pulse, and then the other peak concentrations at CRM 14.4 were computed, using this relationship and the masses of dye injected. An exception to this procedure was found necessary, however, for the prolonged weekend shutdowns.

During the weekend shutdown there was a considerably longer time available for "reservoir-type" diffusion to take place than during weekday shutdowns. Such diffusion substantially reduced the effective mass of dye that moved to produce peak concentrations at particular points in the river. It was necessary to adjust the mass of dye for this diffusion effect in calculations that included weekend shutdowns, using techniques described by Parker in 1961.[26] Reservoir-type diffusion was not considered in predicting concentrations from weekday shutdowns. However, it was found that the prediction of weekday peak concentrations at CRM 14.4 could be considerably improved if the estimation of concentration were related both to the dye mass and the effects of reservoir-type diffusion for all dye pulses. Such relationships were developed from results of the tests conducted in August 1963. In substance, the summer tests provided the computational information required to predict more accurately the power-release diffusion characteristics of the Clinch River. The results of the application of this information to predict concentrations under winter flow conditions are given in the fourth column of Table 4.

Summary Critique of the Dye Test Studies.- This test completed the experimental field studied of eddy diffusion as part of the Clinch River Study. The results of this test and several earlier tracer tests have provided answers to several practical problems that involve diffusion characteristics of the lower Clinch River. For example: (1) the time of travel of a cloud of contaminants can be computed; (2) the maximum concentrations of contaminants at critical points of use were less than the permissible concentrations when river flows were affected by representative power-release operations at Melton Hill Dam; and (3) a computational method has been developed by which peak concentrations for other power release patterns can be estimated.

Aside from the computation of time of travel in the river, the calculation of other diffusion characteristics relies heavily on the empirical definition of many parameters. For problems of diffusion in the Clinch River this poses no practical difficulties. However, the investigators would like to study the experimental data further with the hope that reliance on empirical definition of these parameters may be reduced. Such study would center about development of methods for predicting the diffusion coefficients. The ability to predict diffusion coefficients through analytical means would permit use of the power-wave diffusion mathematical model to be applied to such problems in other streams.

Conclusions

The investigators who conducted the 1963 summer dye-tracer studies recommended that further field studies of diffusion in the Clinch River should be made, "particularly studies under winter conditions and with unsteady and nonuniform flows."[5] Their prediction that the minimum dilution factor at CRM 14.4 for power release patterns is much less in winter than in summer was confirmed by the "winter" dye tests in 1964 (Table 6).

Table 6. Seasonal Minimum Dilution Factors and the Seasonal Ratio (Summer/Winter) of these Factors at CRM 14.4 and at CRM 5.5

	CRM 14.4		CRM 5.5	
Season	Factor	Ratio	Factor	Ratio
Summer	54.8		122	
		3.26		3.31
Winter	16.8		36.9	

The three-fold reduction in minimum dilution under winter conditions as compared with summer is due to the combined effects of greater velocities in the Clinch River, slightly increased power releases, greater fluctuations of storage in White Oak Creek embayment, slightly increased flow through White Oak Dam, substantially greater velocities in White Oak Creek embayment at times of decreased power releases, and less diffusion of the moving mass of dye.

Results of the 1964 tests indicate that the time of arrival of peak concentrations at CRM 14.4 may be reasonably predicted using analytical techniques developed especially for the Clinch River by the TVA.[22]

As shown by the data in Table 4 an extremely reliable method of predicting peak concentrations at CRM 14.4 has been developed. This method of prediction requires that information be available on: (1) the channel geometry of White Oak Creek embayment; (2) the rate of discharge of solutes and of water over White Oak Dam; (3) the relationship between discharge and water level for various elevations of the water surface in Watts Bar embayment at the mouth of White Oak Creek; and (4) the empirically defined diffusion characteristics of a solute mass transported in the river from the mouth of White Oak Creek to CRM 14.4.

Difficulties have been encountered in predicting peak concentrations at CRM 5.5. These difficulties stem from conditions at Watts Bar Dam and Reservoir, the effects of changes of discharge in this study reach upon the diffusion characteristics, and lack of knowledge concerning the effects of stagnation of a dye mass between CRM 14.4 and CRM 5.5. However, the reduction in maximum peak concentrations between CRM 14.4 and CRM 5.5 for the summer tests of 1963 and the winter tests of 1964 are practically the same, the reduction factor ranging from 2.19 to 2.23. Study of the data obtained for other peak concentrations indicates that the reduction in the peaks resulting from the release of dye during weekday shutdowns has averaged about 3.17 for both summer and winter conditions. In some cases the reduction in concentration between CRM 14.4 and CRM 5.5 has been greater than 3.17 but these greater reductions resulted from extended stagnation or incomplete release of the tracer solution at the startup of a test. Based on these comparisons of the reduction of concentrations between CRM 14.4 and CRM 5.5 it was concluded that peak concentrations at CRM 5.5 can be predicted closely for the ranges of flow that were included in the dye tracer studies of 1963 and 1964.

SAFETY EVALUATION STUDIES

Data obtained by various groups in the Clinch River Study were analyzed and used by the Subcommittee on Safety Evaluation in its estimates of potential radiation exposures from the Clinch and Tennessee Rivers. The bases and preliminary results of the safety evaluation studies were reviewed in the two preceding status reports.[4,5] Status Report No. 4 described in considerable detail the appointment and responsibility of this subcommittee, objectives and methods of the safety analysis, sources and aquatic pathways of radiation exposures to people and preliminary estimates of dose rates that might be expected from various uses of the rivers.

The final section of Status Report No. 5 described the later revisions of the safety analysis and commented on the subcommittee's general conclusions. It was explained that the final report by the Subcommittee on Safety Evaluation would be published separately as a supplement to Status Report No. 5.[9]

Opinions and Conclusions of the Subcommittee

Prior to its meetings on December 15 and 16, 1964 the Steering Committee requested each of its four subcommittees to submit its conclusions regarding long-term monitoring of the river system, and additional research studies that should be considered. At the open meeting on December 16 the Subcommittee on Safety Evaluation submitted its group opinions, which are summarized below.[9]

Monitoring Program

1. Routine environmental monitoring should be devoted mainly to surveillance of the current and critical pathways of exposure. For man these pathways are the ingestion of river water and fish.

2. Although contaminated water and bottom sediments are relatively minor sources of external radiation exposure to man, direct measurements of their radiation intensity are desirable. Such measurements are needed initially to confirm dose-rate calculations, and occasionally thereafter to reconfirm the potential of these sources.

3. It is desirable to investigate current and possible future use of the Clinch River and Tennessee River as sources of water for supplemental crop irrigation. This information can be used to determine the need for sampling soils or crops in the affected areas.

4. Periodic review and evaluation is needed to confirm the adequacy of the monitoring program and to reestablish the indentity of the critical nuclides and critical exposure pathways. Such review should be concerned not only with radionuclides of long physical half life, but also with those of short half life which may otherwise be overlooked by the routine monitoring procedures.

5. The routine monitoring program should include comparison of gross beta analyses of daily samples and of monthly composite samples. The differences in gross beta results would indicate the significance of the contribution by short-lived radionuclides in the effluent.

Additional Research

There is need for additional research to reduce the uncertainties regarding fish and irrigated crops as potential causes of radiation exposure. Examples of information that would be most helpful in radiation safety analyses of the river system are outlined below.

1. Fish.— Information that would help to estimate the potential dose to man, and to optimize a fish-monitoring program, for example:

a. Rate of transfer and quantity of ^{90}Sr and stable strontium from water and other river materials to the flesh and bone of important food-fish species.

b. Influence of fish age and season of the year on rates of transfer of strontium in food fish.

c. Whether ^{90}Sr is transferred from bone to flesh of fish by cooking, the extent of transfer, and the factors involved.

d. Feasibility and methods of preventing fish in White Oak Creek or White Oak Lake from entering the Clinch River, thus eliminating an important potential source of ^{90}Sr in the human food chain.

2. Crop Irrigation.— Analysis of this critical exposure pathway requires knowledge of the behavior of fission products in soils and plants (in the East Tennessee environs for pertinence to the Clinch River Study).

a. Accumulation of fission products with time in irrigated soils under various conditions of irrigation, cultivation, and radioactive constituents in the irrigation water.

b. The transfer of fission products from soils to plants.

c. Foliar retention of fission products by the plants.

The subcommittee's analysis of present conditions in the rivers showed a large factor of safety despite the necessity for conservative assumptions regarding pathways of exposure for which actual information was lacking. Discussion in the Steering Committee meeting [11] emphasized the importance of making the safety evaluation as realistic

and reliable as possible. Estimation of potential dosages should be conservative but not exaggerated. This will avoid extreme interpretations (out of context) and resultant unjustified concern about radiation exposures.

Possible exposures from radionuclides in the river system at present are insignificant. However, the additional research recommended by the subcommittee is amply justifiable: (1) to allow safety evaluations to be based on factual data and, therefore, more accurate and reassuring; and (2) to allow advance appraisal of the potential effects of postulated accidental or emergency releases of radionuclides to the river and preparation for countermeasures.

COMPUTER SIMULATION OF THE FATE OF RADIOACTIVE WASTES IN STREAMS

The primary effort in simulation studies of stream systems is to represent in every important respect the behavior of the system under study in mathematical models of the stream that are easier to manipulate and that can be subject to various decisions more quickly and cheaply than the stream itself. Such models are a necessity because of the many interdependencies between the hydrologic parameters and the design variables.

At the meeting of the Steering Committee on December 15, 1964 (pages 4-5), Professors Myron B. Fiering and Harold A. Thomas, Jr., presented generalized discussions of digital computer simulation models of river systems,[27] and the results of computer simulation of the discharge of radioactive wastes into the Clinch River system,[28] respectively. The summary that follows is based upon the discussions presented at that meeting and upon the report to the U.S. Atomic Energy Commission. Operations Research in Disposal of Liquid Radioactive Wastes in Streams NYO-10447 (December 1965), Harold A. Thomas, Jr.: Part V, "A Model for Computer Simulation of the Fate of Radioactive Wastes in Streams," Harold A. Thomas, Jr. and Myron B. Fiering).[29]

In the study a digital computer was chosen instead of an analog computer, because the expressions of relationships between the hydrologic and design inputs can be varied without requiring a change in the simulation components, as would be required for an analog simulation.

Simulation, extends the range of experimentally obtained data by varying the important parameters in the model. These parameters have been established from the

experimental data. This mathematical model was developed as a stochastic process (process in which at least one of the variables in the system is a random variable or has an element of randomness) and simulates the physical processes and interactions of stream flow, dilution, mixing, nuclear decay, uptake and release from benthal deposits, water withdrawal at use points, and water treatment. Based upon the data developed during the Clinch River Study, the flow diagram, shown in Fig. 8, for the mathematical model was formulated, in which

Δt = characteristic time interval for the model;

x_1 = flow rate in stream 1, either Clinch River or Tennessee River;

x_2 = flow rate in stream 2, zero in this study;

x_3 = draft or withdrawal rate at K-25 or Chattanooga;

y_o = antecedent pollutant flux or fallout;

y_1 = pollutant flux introduced at waste outfall;

y_2 = amount of activity transferred during each time interval Δt to the biomass or benthal deposit;

y_3 = amount of activity removed during each time interval Δt from the biomass or benthal deposit;

Y = total amount of activity in storage ;

y_4 = amount of activity lost by nuclear decay during time-of-travel to use-point;

h = decay constant for radioisotope;

y_5 = amount of radioactivity diverted to use-point before treatment;

y_6 = amount of activity removed in treatment or processing; and

y_7 = amount of activity diverted to use-point after treatment or processing.

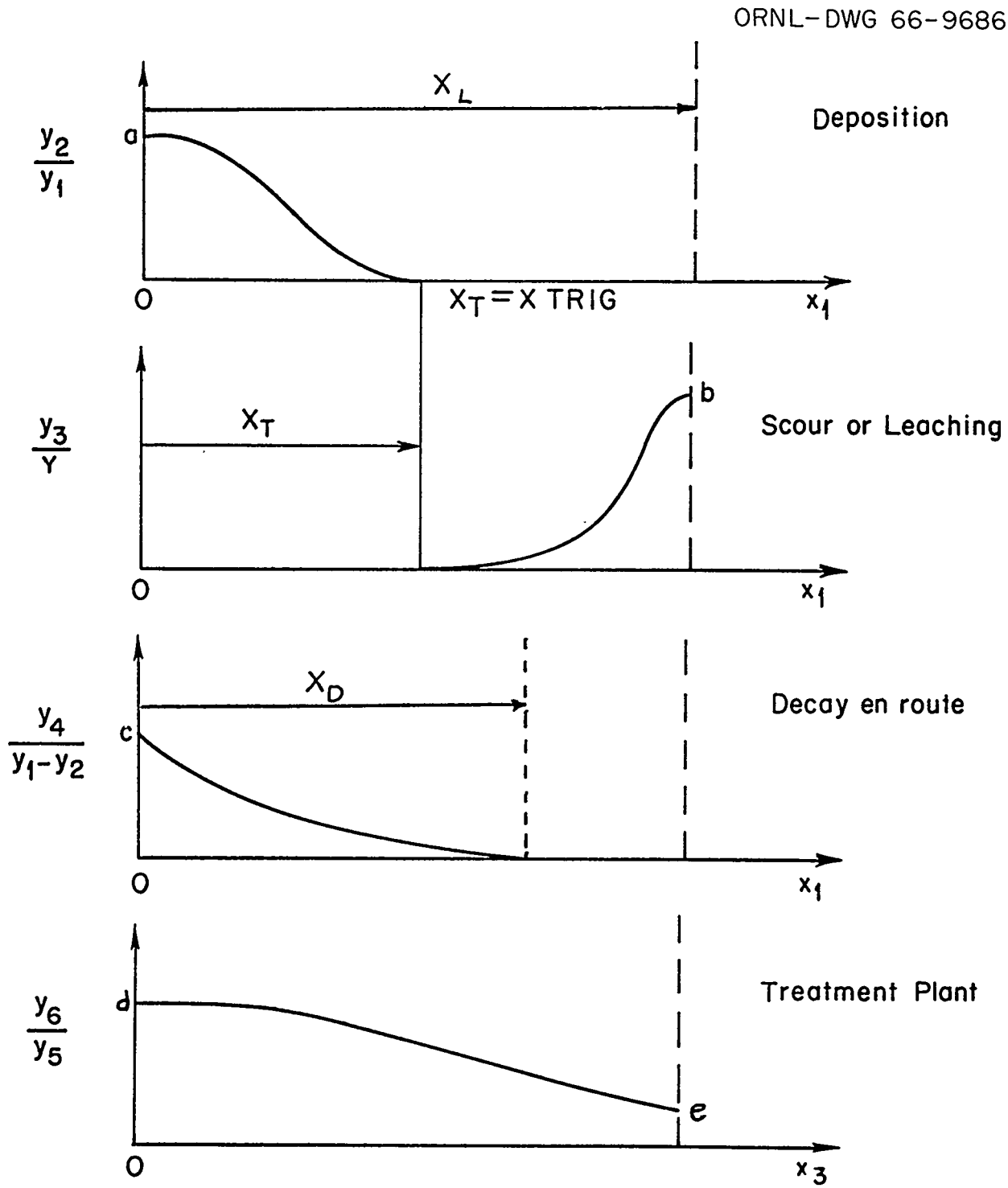

Fig. 8. Functions Interrelating Flows of Water and Pollutant.

The flow in the river, x_1, is generated by sampling from a population defined by a Markov chain. Markov chains are the simplest generalization of a scheme of independent trials. It is a process characterized by progression from state "i" to state "i + 1" with a specified set of probabilities which are independent of how the process arrived at state "i". The additional input data, such as inflow, x_2, outflow, x_3, and pollutant loads, y_o and y_1, are assumed to be dependent only on x_1, the river flow, and are generated from a recursion formula. With this input data and an absolute value for the decay constant, h, the variables of interest--the average, maximum and minimum curie loads and concentrations at the use-points and in the benthal deposits--can be computed. Relationships for deposition, scour or leaching, decay enroute, and for the treatment plant, as shown in Fig. 9, are required for the computation. The program was run on the computer for a four-season model (i.e., treating each successive three months as a season) for the Clinch and Tennessee Rivers. The standard deviation of the flow in and withdrawals from the rivers was set at 0 (the deterministic model) and 100% of the computed deviation. The pollutant input standard deviation was set at 0 (deterministic model), 50%, 100%, and 200%; the standard deviation of benthal deposition was set at 100% and at 0%; of filter plant removal at 25%, at 50% of the loading; and of fallout at 0 and 100% of the values listed in Table 7. The average flows and withdrawals in the Clinch and Tennessee Rivers and the contaminant inputs were derived for a 200-year period with results as shown in Table 7.

Table 8 lists the pertinent parameters from Fig. 9. For the annual model of the Tennessee River with the functional values shown in Fig. 9 and in Table 8, the concentration at the use-point ranged from 0.17 to 0.28 pCi/l with a mean of 0.22 pCi/l.* The maximum annual mean concentration was 0.63 pCi/l.

*pCi/l means picocuries per liter.

ORNL-DWG 66-9685

x_1, x_2, y_1 are exogenous stochastic variates

$$x_{i+1} - \mu_x = \rho(x_i - \mu_x) + \sqrt{1-\rho^2}\ \sigma_x\ t$$

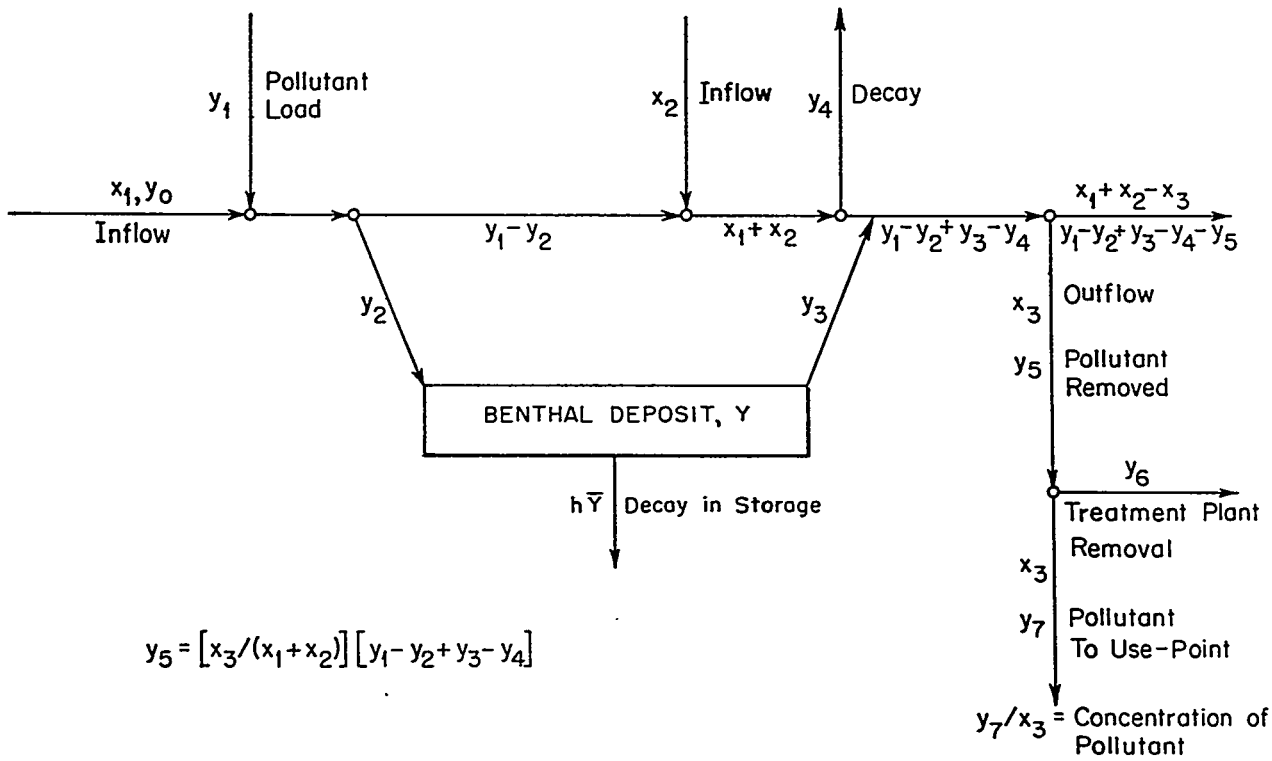

$$y_5 = [x_3/(x_1+x_2)]\,[y_1 - y_2 + y_3 - y_4]$$

Fig. 9. Vector Diagram Flow of Water and Pollutant.

Table 7. Input Data for Four Season Model of Clinch and Tennessee Rivers

Season	Flow (cfs) Mean	Flow (cfs) Standard Deviation	Withdrawal (cfs) Mean	Withdrawal (cfs) Standard Deviation	Season	Contaminant Input (curies) Mean	Contaminant Input (curies) Standard Deviation	Fallout Input (curies) Mean	Fallout Input (curies) Standard Deviation
				Clinch River					
1	1,488	750	0.19	0.06	1	4.28	3.94		
2	783	324	0.22	0.07	2	2.25	2.07		
3	1,052	246	0.28	0.08	3	1.97	1.81		
4	1,309	392	0.19	0.06	4	1.50	1.38		
Annual	4,632	1,119	0.88			10.00			
				Tennessee River					
1	12,508	3,334	14.66	4.36	1	4.28	3.94	7.94	3.92
2	6,825	1,197	16.56	4.92	2	2.25	2.07	10.20	5.81
3	6,925	1,074	20.59	6.04	3	1.97	1.81	9.03	4.52
4	8,827	2,741	14.66	4.36	4	1.50	1.38	8.64	3.97
Annual	35,085	5,572	66.46			10.00		35.81	

Table 8. List of Pertinent Parameters for Figure 9

X_L	X_T (10^3 cfs)	X_D	a	b	c	d	e
			Tennessee River				
15.0	8.20	10.1	0.40	0.250	0.002	0.35	0.15
			Clinch River				
1.96	1.06	1.31	0.40	0.250	0.002	0.35	0.15

This value being three times the over-all mean indicates the imprecision of the data or the inherent instability of the system analyzed on an annual basis. The mean and range of the 10-year storage in the benthal deposits were 0.92, and 0 - 4.46 curies respectively.

The effect of variation in the input parameters upon the intake concentrations are shown in Table 9. It should be noted that the effect of drastically decreasing the standard deviation of the pollutant input, while still maintaining the same mean input, is quite small. The effect on the range of the values, however, is marked. For the Clinch River (run 10), where 200% of the standard deviation of the pollutant input is used, the mean activity loading is 1.17 mCi and the maximum is 5.33 mCi; and at 0% standard deviation (run 12), the mean is 1.51 mCi and the maximum loading is 1.81 mCi. The mean and maximum loadings for the Tennessee River as shown in Run 2 for 200% standard deviation of pollutant input are 11.34 mCi, and 53.42 mCi, and in Run 4 for 0% standard deviation, 13.9 mCi, and 15.5 mCi, respectively. Such great variability in the pollutant input when the mean input remains the same has a quite minor effect upon the mean intake of pollutant. This is further illustrated in values shown in Table 9 for Runs 1 through 4, and Runs 9 through 12.

Runs 5 and 13 are the deterministic models (Standard deviations of all input variables are set to zero.) and, as shown in Table 9, the effect on the mean values is small. In systems where the contaminant input differs greatly in time from the flow input and the contaminant removal, the range of the means could be greater.

The effect of the elimination of the benthal deposits and the filter plant are shown in Run 6. If 25% reduction is allowed in the expected load due to the treatment plant, there is still a slight increase in the intake loading. This is due to the amount taken up

Table 9. Intake Concentrations Due to Variation of Parameters

Run Number	Y_1	Contaminant Input % of Standard Deviation	Benthal Removal (%)	Filter Plant Removal (%)	Fallout Input (%)	Expected Load/yr (mCi)	Maximum Load/season (mCi)	Expected Conc./yr (pCi/l)	Maximum Conc./season (pCi/l)	Benthal Deposits (curies)
					Tennessee River					
1	100	100	100	100	0	12.12	21.65	0.2151	1.5780	1.668
2	200	100	100	100	0	11.34	53.42	0.2085	4.6610	1.398
3	50	100	100	100	0	12.79	14.72	0.2207	0.7805	1.897
4	0	100	100	100	0	13.87	15.52	0.2306	0.5284	2.220
5	0	0	100	100	0	13.61	4.04	0.2306	0.3081	1.381
6	100	100	0	0	0	17.48	40.06	0.3056	2.149	0.000
7	100	100	100	Twice Removal shown in Fig. 12	0	8.03	17.83	0.1385	0.8156	1.6682
8	100	100	100	100	100	59.79	53.03	1.0563	3.698	9.662
					Clinch River					
9	100	100	100	100	0	1.28	2.232	1.6929	12.050	2.064
10	200	100	100	100	0	1.17	5.325	1.6082	32.020	1.715
11	50	100	100	100	0	1.38	2.189	1.7648	7.570	2.398
12	0	100	100	100	0	1.51	1.807	1.8813	5.476	2.945
13	0	0	100	100	0	1.37	0.432	1.7794	2.569	1.368
14	100	100	100	Twice Removal shown in Fig. 12	0	0.85	1.812	1.0902	8.036	2.064

and decayed in the benthal deposits, as well as the part that may be due to stochastic components of the input variables.

The effect of the treatment plant that was twice as efficient as the one shown in Fig. 12 in the removal of pollutants is shown in Runs 7 and 14. The mean flux and concentrations are reduced by about one-third from the standard values as was to be expected (50/75 = 2/3 passing).

The effect of high fallout pollutant input (shown in Run 8) was equivalent to increasing the pollutant intake by approximately the same ratio as the fallout pollutant was to the waste pollutant.

The most important information derived from the simulation of the Clinch-Tennessee River system was that the mean concentrations at the critical points are only slightly affected by a wide range of pollutant inputs and flows, provided the mean inputs are constant.

The simulation program as developed could be used with additional economic input to determine the optimum place and time of treating the wastes discharged from the Oak Ridge National Laboratory.

REFERENCES

1. R. J. Morton (ed.) et al., Status Report No. 1 on Clinch River Study, Clinch River Study Steering Committee, ORNL-3119 (July 27, 1961).

2. R. J. Morton (ed.) et al., Status Report No. 2 on Clinch River Study, Clinch River Study Steering Committee, ORNL-3202 (March 30, 1962).

3. R. J. Morton (ed.) et al., Status Report No. 3 on Clinch River Study, Clinch River Study Steering Committee, ORNL-3370 (Nov. 21, 1962).

4. R. J. Morton (ed.) et al., Status Report No. 4 on Clinch River Study, Clinch River Study Steering Committee, ORNL-3409 (Sept. 11, 1963).

5. R. J. Morton (ed.) et al., Status Report No. 5 on Clinch River Study, Clinch River Study Steering Committee, ORNL-3721 (October 1965).

6. M. A. Churchill, Chairman, et al., Concentrations, Total Stream Loads, and Mass Transport of Radionuclides in the Clinch and Tennessee Rivers, Progress Report No. 4 (Final) of Subcommittee on Water Sampling and Analysis, Clinch River Study, Subcommittee to Clinch River Study Steering Committee, December 15, 1964, ORNL-3721, Suppl. 1 (August 1965).

7. P. H. Carrigan, Jr., Chairman, et al., Radioactive Materials in Bottom Sediment of Clinch River: Part A, Investigations of Radionuclides in Upper Portion of Sediment, Final Progress Report, Part A of Subcommittee on Bottom Sediment Sampling and Analysis, Submitted to Clinch River Study Steering Committee, Dec. 15, 1964, ORNL-3721, Suppl. 2A (in press).

8. P. H. Carrigan, Jr. and R. J. Pickering, Radioactive Materials in Bottom Sediment of Clinch River: Part B, Inventory and Vertical Distribution of Radionuclides in Undisturbed Cores, Progress Report, Part B of Subcommittee on Bottom Sediment Sampling and Analysis, Submitted to Clinch River Study Steering Committee, Dec. 15, 1964, ORNL-3721, Suppl. 2B (in press).

9. K. E. Cowser and W. S. Snyder, Safety Analysis of Radionuclide Release to the Clinch River, Progress Report No. 3 (Final) of Subcommittee on Safety Evaluation, Submitted to Clinch River Study Steering Committee, December 16, 1964, ORNL-3721, Suppl. 3 (May 1966).

10. Minutes, Special Open Meeting of Clinch River Study Steering Committee, Oak Ridge National Laboratory, Oak Ridge, Tennessee, Jan. 30, 1964 (multilithed).

11. Minutes, Open Meeting of Clinch River Study Steering Committee, Oak Ridge National Laboratory, Oak Ridge, Tennessee, December 15-16, 1964 (multilithed).

12. Minutes, Executive Meeting of Clinch River Study Steering Committee, Oak Ridge National Laboratory, Oak Ridge, Tennessee, Dec. 16, 1964 (multilithed).

13. E. G. Struxness (ed.) et al., Report of the Clinch River Study, Clinch River Study Steering Committee, ORNL-4035, in preparation.

14. Tsuneo Tamura, "Selective Ion Exchange Reactions for Cesium and Strontium by Soil Minerals," in Colloque International sur la Migration des Ions Radioactiff dans les Sols, Presses Universitaries de France, Paris, pp. 95-104 (1963).

15. T. F. Lomenick, "Movement of Ruthenium in the Bed of White Oak Lake," Health Physics, Vol. 9, pp. 838-845 (Aug., 1963).

16. E. G. Struxness, R. J. Morton, and F. L. Parker, "Clinch River Studies" in Radioactive Waste Disposal, Health Physics Division Annual Progress Report for Period Ending July 31, 1962, ORNL-3347, pp. 20-27.

17. E. G. Struxness and R. J. Morton, "Clinch River Studies," Radioactive Waste Disposal, Health Physics Division, Annual Progress Report for Period Ending July 31, 1961, ORNL-3189, pp. 13 to 19.

18. M. A. Churchill, Chairman, et al., Ref. 6, Dec. 15, 1964, op. cit., pp. 69-70.

19. Subcommittee on Aquatic Biology, Report of Meeting October 8, 1964 and Recommendations to Steering Committee, Submitted at Meeting of Steering Committee December 15, 1964, Oak Ridge National Laboratory (multilithed).

20. R. J. Morton (ed.) et al., ORNL-3119 (July 27, 1961), op. cit., pp. 58-65.

21. B. J. Frederick, F. L. Parker, and P. H. Carrigan, Jr., "Dye Tracer Studies — Summer 1963," Progress Report to Clinch River Study Steering Committee, presented at Open Meeting, Oak Ridge National Laboratory, Dec. 4, 1963 (multilithed).

22. A. J. Cooper, Effects of Accidental Spillage of Radioactive Waters into Clinch River, Report No. 1: Time of Travel, Probable Flows, and Dispersion, Hydraulic Data Branch, Division of Water Control Planning, Tennessee Valley Authority, Nov. 10, 1962, (preliminary data for special usage).

23. R. J. Morton (ed.), et al., Status Report No. 3 on Clinch River Study, ORNL-3370 November 21, 1962, op. cit., pp. 88-104.

24. R. J. Morton (ed.) et al., Status Report No. 4 on Clinch River Study, ORNL-3409, September 11, 1963, op. cit., pp. 61-73.

25. B. H. Ketchum, "The Exchange of Fresh and Salt Waters in Tidal Estuaries," Jour. Marine Research, Vol. 10, No. 1, pp. 18-37 (1951).

26. F. L. Parker, "Eddy Diffusion in Reservoirs and Pipelines," ASCE Jour. Hyd. Div., Proc. Am. Soc. of Civil Engrs., May 1961.

27. Myron B. Fiering, "Computer Simulation Models of River Systems," Presented at Open Meeting of Clinch River Study Steering Committee, December 15, 1964 (Multilithed).

28. Harold A. Thomas, Jr., "A Model for Computer Simulation of the Fate of Radioactive Wastes in Streams," Presented at Open Meeting of Clinch River Study Steering Committee, December 15, 1964 (Multilithed).

29. Harold A. Thomas, Jr. and Myron B. Fiering, "A Model for Computer Simulation of the Fate of Radioactive Wastes in Streams," Part V in Operations Research in Liquid Radioactive Waste Disposal, by Harold A. Thomas, Jr., U.S. Atomic Energy Commission, NYO-10447 (December 1965).

ORNL-3941
UC-70 – Waste Disposal and Processing

INTERNAL DISTRIBUTION

1. Biology Library
2. Central Research Library
3. Laboratory Shift Supervisor
4. Reactor Division Library
5- 6. ORNL-Y-12 Technical Library Document Reference Section
7-36. Laboratory Records Department
37. Laboratory Records, ORNL RC
38. H. H. Abee
39. W. A. Arnold
40-44. S. I. Auerbach
45. R. E. Blanco
46. B. G. Blaylock
47. F. R. Bruce
48. W. B. Cottrell
49. W. D. Cottrell
50. K. E. Cowser
51. J. A. Cox
52. F. L. Culler
53. D. M. Davis
54. M. F. Fair
55. R. F. Hibbs (Y-12)
56. R. G. Jordan (K-25)
57. W. H. Jordan
58. M. T. Keeley
59. F. Kertesz
60. C. E. Larson
61. J. C. Ledbetter
62. T. F. Lomenick
63. R. N. Lyon
64. H. G. MacPherson
65. J. D. McLendon (Y-12)
66. K. Z. Morgan
67-71. D. J. Nelson
72. M. L. Nelson
73-77. F. L. Parker
78. B. C. Patten
79. M. E. Ramsey
80. N. B. Schultz (K-25)
81. H. E. Seagren
82. M. J. Skinner
83. W. S. Snyder
84-88. E. G. Struxness
89. T. Tamura
90. A. M. Weinberg
91. E. J. Witkowski
92. W. G. Belter (AEC-Wash)
93. J. S. Cragwall (USGS)
94. Jared J. Davis (AEC-Wash)
95. F. E. Gartrell (TVA)
96. H. M. Nichols (Tenn. State Game and Fish Commission)
97. S. Leary Jones (Tenn. State Health Department)
98. C. S. Shoup (AEC-ORO)
99. A. G. Friend (USPHS)
100-102. R. J. Morton (consultant)
103. J. C. Frye (consultant)
104. John B. Hursh (consultant)
105. J. L. Magee (consultant)
106. E. P. Odum (consultant)
107. H. O. Wyckoff (consultant)

EXTERNAL DISTRIBUTION

108. Robert C. Ball, Department of Fisheries and Wildlife, Michigan State University, East Lansing, Michigan
109. N. R. Kevern, Department of Fisheries and Wildlife, Michigan State University East Lansing, Michigan
110. Kenneth D. Carlander, Department of Zoology, Iowa State College, Ames, Iowa.
111. Emil T. Chanlett, School of Public Health, University of North Carolina, Chapel Hill, North Carolina
112. Lauren R. Donaldson, School of Fisheries, University of Washington, Seattle, Washington
113. David Frey, Department of Zoology, University of Indiana, Bloomington, Indiana
114. Kare Elgmork, Department of Limnology, University of Oslo, Blindern, Norway

115. Arden R. Gaufin, Department of Zoology and Entomology, University of Utah, 203 Biology Building, Salt Lake City, Utah
116. Rolf Eliassen, Professor of Sanitary Engineering, School of Engineering, Stanford University, Stanford, California 94305
117. Gordon M. Fair, Professor of Sanitary Engineering, Harvard University, Cambridge, Massachusetts
118. John C. Geyer, Professor of Sanitary Engineering, the Johns Hopkins University, Baltimore, Maryland
119. E. F. Gloyna, Department of Civil Engineering, University of Texas, Austin 12, Texas
120. Warren J. Kaufman, Department of Engineering, University of California, Berkeley, California
121. Peter A. Krenkel, Department of Civil Engineering, School of Engineering, Vanderbilt University, Nashville, Tennessee
122. Floyd C. Larson, Professor of Sanitary Engineering, Civil Engineering Department, 59 Perkins Hall, University of Tennessee, Knoxville, Tennessee
123. Louis A. Krumholz, Department of Biology, Louisville University, Louisville 8, Kentucky
124. R. A. Lauderdale, Civil Engineering Department, University of Kentucky, Lexington, Kentucky
125. G. Fred Lee, Water Chemistry, University of Wisconsin, Madison, Wisconsin
126. Walter M. Sanders, Southeastern Water Laboratory, College Station Road, Athens, Georgia 30601
127. Donald C. Scott, Department of Zoology, University of Georgia, Athens, Georgia
128. M. A. Shapiro, Department of Public Health Service, University of Pittsburgh, Pittsburgh 13, Pennsylvania
129. L. L. Smith, Department of Fisheries and Wildlife, University of Minnesota, St. Paul, Minnesota
130. Harold A. Thomas, Jr., Department of Sanitary Engineering, Harvard University, Carbridge, Massachusetts
131. A. R. Zafar, Hydrobiological Laboratory, Osmania University, Hyderabad DN. 7, India
132. Yehuda Feige, Ministry of Defense, Atomic Energy Commission, Soreq Research Establishment, Rehovoth P.O.B. 527, Israel
133. H. M. Roth, Division of Research and Development, U.S. Atomic Energy Commission, Oak Ridge, Tennessee

134-135. U.S. Atomic Energy Commission, Biology Branch, Oak Ridge, Tennessee (1 copy each to R. L. Hervin and J. A. Lenhard)

136-137. W. G. Belter, Environmental and Sanitary Engineering Branch, Division of Reactor Development and Technology, U.S. Atomic Energy Commission, Washington, D.C. 20545

138. J. A. Swartout, Union Carbide Corporation, 270 Park Avenue, New York, New York 10017
139. J. A. Lieberman, Division of Reactor Development and Technology, U.S. Atomic Energy Commission, Washington, D. C. 20545
140. A. A. Schoen, Division of Operational Safety, U.S. Atomic Energy Commission, Washington, D. C. 20545
141. Charles L. Dunham, Division of Biology and Medicine, U.S. Atomic Energy Commission, Washington, D. C. 20545

142. Vincent Schult, Zoology Department, Washington State University, Pullman, Washington
143. John Wolfe, Division of Biology and Medicine, U.S. Atomic Energy Commission, Washington, D. C. 20545
144. Carl R. Gerber, Division of Peaceful Nuclear Explosives, U.S. Atomic Energy Commission, Washington, D. C. 20545
145. Frank F. Hooper, Department of Zoology, University of Michigan, Ann Arbor, Michigan 48104
146. C. J. Chance, Fish and Game Branch, Division of Forestry Relations, Tennessee Valley Authority, Norris, Tennessee
147. M. A. Churchill, Environmental Hygiene Branch, Division of Health and Safety, Tennessee Valley Authority, Edney Building, Chattanooga, Tennessee
148. Alfred J. Cooper, Chief, River Control Branch, Tennessee Valley Authority, 702 Union Building, Knoxville, Tennessee
149. F. E. Gartrell, Division of Health and Safety, Tennessee Valley Authority, Edney Building, Chattanooga, Tennessee
150. O. W. Kochtitzky, Division of Health and Safety, Tennessee Valley Authority, 717 Edney Building, Chattanooga, Tennessee
151. J. W. Beverage, Tennessee Valley Authority, Union Building, Knoxville, Tennessee.
152. William T. Lammers, Building K-704, ORGDP, Oak Ridge, Tennessee
153. P. C. Benedict, Water Resources Division, QW, U. S. Geological Survey, Washington, D. C. 20242
154. G. A. Billingsley, U. S. Geological Survey, Washington, D. C. 20242
155. R. W. Carter, Water Resources Division, SW, U.S. Geological Survey, Washington, D. C. 20242
156. W. R. Eaton, Water Resources Division, SW, U.S. Geological Survey, Room 1252, Federal Building, 1520 Market Street, St. Louis, Missouri 63103
157. B. J. Frederick, Water Resources Division, U.S. Geological Survey, 301 Cumberland Avenue, Knoxville, Tennessee 37902
158. P. H. Carrigan, Jr., Water Resources Division, U.S. Geological Survey, Code 4040001, General Services Bldg., Washington, D. C. 20242
159. W. M. McMaster, Water Resources Division, U.S. Geological Survey, 301 Cumberland Avenue, Knoxville, Tennessee 37902
160. R. J. Pickering, Water Resources Division, U.S. Geological Survey, 2822 E. Main Stree Columbus, Ohio 43209
161. R. M. Richardson, U.S. Atomic Energy Commission, Division of Peaceful Nuclear Explosives, Washington, D. C. 20545
162. D. W. Hubbell, Water Resources Division, U.S. Geological Survey, P.O.Box 3202, Room 416, Old Post Office Building, 511 Broadway, Portland, Oregon 97208
163. Alfred Clebsch, Jr., Water Resources Division, U.S. Geological Survey, Washington, D. C. 20242
164. Leslie B. Laird, Water Resources Division, U.S. Geological Survey, P.O. Box 3202, Room 216, Old Post Office Building, 511 Broadway, Portland, Oregon 97208
165. Luna B. Leopold, Water Resources Division, U. S. Geological Survey, Washington, D. C. 20242

166. E. P. Mathews, U. S. Geological Survey, P.O. Box 149, Fort Smith, Arkansas
167. J. P. Monis, Water Resources Division, U.S. Geological Survey, 605 S. Neil Street, Campaign, Illinois, 61820
168. Raymond L. Nace, Water Resources Division, U.S. Geological Survey, Washington, D. C. 20242
169. Richard Payne, U.S. Public Health Service, 50 Seventh Street, N.E., Atlanta 23, Georgia
170-172. Robert A. Taft Sanitary Engineering Center, 4676 Columbia Parkway, Cincinnati, Ohio 45226 (1 copy each to P. W. Kabler, Library, and Leo Weaver, U.S. Public Health Service, 1014 Broadway, Cincinnati, Ohio)
173. R. W. Andrew, National Water Quality Laboratory, Room 313 Old Main Hall, University of Minnesota, Duluth, Minnesota 55812
174. James G. Terrill, Jr., Division of Radiological Health, U.S. Public Health Service, Washington, D. C.
175. William F. Buchholz, Jr., Radiological Health, U.S. Public Health Service, 50 Seventh Street, N.E., Atlanta 23, Georgia
176-179. Northeastern Radiological Health Laboratory, U.S. Public Health Service, 109 Holton Street, Winchester, Massachusetts (1 copy each to Dade W. Mo ller and A. G. Friend)
178. Colbert E. Cushing Radioecology, Biology Operation, Hanford Laboratories, General Electric Company, Richland, Washington
179. R. F. Foster, Radiation Protection Operation, 3703 Building, 300 Area, Richland, Washington 99352
180. Wayne C. Hanson, Biology Operation, Hanford Laboratories, General Electric Company, 146-FR Building, 100-F Area, Richland, Washington
181. C. W. Christenson, International Atomic Energy Agency, Kaerntnerring 11, Vienna 1, Austria
182. Robert D. Wildman, U.S. Atomic Energy Commission, Hanford Operations Office, P. O. Box 550, Richland, Washington
183. Karl Herde, U.S. Atomic Energy Commission, Savannah River Operations Office, U.S. Atomic Energy Commission, Aiken, South Carolina
184. J. H. Horton, Health Physics, Explosives Department, Atomic Energy Division, E. I. duPont de Nemours and Company, Savannah River Plant, Aiken, South Carolina
185. W. L. Marter, Health Physics, Explosives Department, Atomic Energy Division, E. I. duPont de Nemours and Company, Savannah River Plant, Aiken, South Carolina
186. C. M. Patterson, Health Physics, Explosives Department, Atomic Energy Division, E. I. duPont de Nemours and Company, Savannah River Plant, Aiken, South Carolina
187. W. C. Reinig, Savannah River Plant, E. I. duPont de Nemours and Company, Aiken, South Carolina
188. Louis J. Cherubin, Knolls Atomic Power Laboratory, General Electric Company, Schenectady, New York
189. John R. Horan, U.S. Atomic Energy Commission, Idaho Operations Office, Idaho Falls, Idaho

190. Lee Gemmell, Brookhaven National Laboratory, Upton, L.I., New York
191. C. P. McCammon, Tennessee Department of Public Health, Cordell Hull Building, Nashville, Tennessee
192. F. W. Stanberry, Tennessee Game and Fish Commission, Cordell Hull Building, Nashville, Tennessee
193. Lee Mayes, Director, Environmental Health Services, Kansas State Board of Health, State Office Building, Topeka, Kansas
194. Dwight F. Metzler, c/o New York State Department of Health, 84 Holland Avenue, Albany, New York
195. Stanley J. Reno, Director, Industrial Radiation and Air Hygiene Environmental Health Services, State Office Building, Topeka, Kansas
196. Raleigh Robinson, Division of Water Resources, Tennessee Department of Conservation, Cordell Hull Building, Nashville, Tennessee
197. L. P. Wilkins, Tennessee Game and Fish Commission, Cordell Hull Building, Nashville, Tennessee
198. W. T. Willis, Director, Division of Radiological Health, State Health Department, State Office Building, Montgomery, Alabama
199. Justice A. Manning, Public Health Engineer, Radiological Health Service, P.O. Box 2591, Birmingham, Alabama 35202
200. William R. Bechmann, Sport Fishery Abstracts, U.S. Fish and Wildlife Service, Washington 25, D. C.
201. Theodore R. Rice, Fishery Research Biologist, U.S. Fish and Wildlife Service, Beaufort, North Carolina
202. Edward D. Goldberg, University of California, Scripps Institute of Oceanography, Berkeley, California
203. M. Grant Gross, Assistant Professor, Department of Oceanography, University of Washington, Seattle 5, Washington
204-205. Woods Hole Oceanographic Institute, Woods Hole, Massachusetts (1 copy each to V. T. Bowen and B. H. Ketchum)
206. D. W. Pritchard, Chesapeake Bay Institute, the Johns Hopkins University, Baltimore, Maryland
207. Curtis L. Newcombe, U.S. Naval Radiological Defense Laboratory, 8 Middle Road Hidden Valley, Lafayette, California
208. George Sprugel, Jr., 6912 Cherry Lane, Annadale, Virginia
209. Union Carbide Patent Office, 270 Park Avenue, New York 17, New York
210. Mark D. Hollis, Chief, Environmental Sanitary Branch, Pan American Health Organization, 1501 New Hampshire Avenue, N.W., Washington 6, D. C.
211. Irvin M. Lourie, Radiological Health, Pan American Health Organization, 1501 New Hampshire Avenue, N.W., Washington, D. C.
212. E. J. Cleary, Ohio River Valley Water Sanitation Commission, 414 Walnut Street, Cincinnati, Ohio
213. Spyros Amarantos, Health and Safety Division, Nuclear Research Center "Democritus", Athens, Greece
214. Claude Gailledreau, SCRGR/ECS, CEN Saclay, BP No. 2, Gif/yvette S and O, France

215. Pietro Giuliani, Divisone Sicuressa, E. Controlli, C.N.E.N., 15 Via Belisario, Rome, Italy
216. Health and Safety Section A B Atomenergi, Studsvik, Nykoping, Sweden
217. V. Tonolli, Instituto Italiano di Idrobiologia, Pallanza (novara) Italy
218. Oscar Ravera, Biologie, Limnologia, EURATOM, Ispra (Varese), Italy
219. O. M. Skulberg, Norwegian Institute for Water Research, Blindern, Norway
220. Vanderbilt University, Nashville, Tennessee (Joint Universities Library)
221. University of Rochester, Rochester, New York (Library)
222. University of Kansas, Lawrence, Kansas (Library)
223. University of Washington, Seattle, Washington (Library)
224. University of California, School of Public Health, Berkeley 4, California (Library)
225. University of California at Los Angeles, School of Public Health, Los Angeles 24, California (Library)
226. Columbia University, School of Public Health and Administrative Medicine, New York 32, New York (Library)
227. Harvard University, School of Public Health, Boston 15, Massachusetts (Library)
228. The Johns Hopkins University, School of Hygiene and Public Health, Baltimore 5, Maryland (Library)
229. University of Michigan, School of Public Health, Ann Arbor, Michigan (Library)
230. University of Minnesota, School of Public Health, Minneapolis 14, Minnesota (Library)
231. University of North Carolina, School of Public Health, Chapel Hill, North Carolina (Library)
232. University of Oklahoma, School of Public Health, Norman, Oklahoma (Library)
233. University of Pittsburgh, Graduate School of Public Health, Pittsburgh 13, Pennsylvania (Library)
234. University of Puerto Rico, Department of Preventive Medicine and Public Health, San Juan 22, Rico (Library)
235. Tulane University Medical School, Division of Graduate Public Health, New Orleans 12, Louisiana (Library)
236. Vanderbilt University, School of Engineering, Nashville, Tennessee (Library)
237. Yale University, Department of Public Health, New Haven, Connecticut (Library)

238-487. Given distribution as shown in TID-4500 under Waste Disposal and Processing category (25 copies – CFSTI)