ChemRisk

DOCUMENT DESCRIPTION (Completed By Requesting Division)

Document No.	Author's Telephone No.	Acct. No.	Date of Request
Y/TS-1565/DEL REV	6-0263	2366000 3	08/27/96

Unclassified Title: TRITIUM IN D_2 GAS (FROM L. HEADRICK, 9204-2)

Author(s): Requestor: Steve Wiley

TYPE: ☐ Formal Report ☐ Informal Report ☐ Progress/Status Report ☐ Co-Op Report ☐ Thesis/Term Paper

☐ Oral Presentation (identify meeting, sponsor, location, date):

☐ Journal Article (Identify Journal):

☒ Other (Specify): To Be Released to ChemRisk, Phase II

Document will be published in proceedings ☑ No ☐ Yes

Document will be distributed at meeting ☑ No ☐ Yes

Document has patent or invention significance ☑ No ☐ Yes (Identify)

Document has been previously released ☑ No ☐ Yes (Reference)

LOAP

DIVISION REVIEW AND APPROVAL (Completed By Requesting Division)

TECHNICAL CLASSIFICATION REVIEW (Divisional Classification Representative)

Title(s): U Abstract: NA

DOCUMENT: Level S RD Category —

Signature [illegible] Date 8/27/96

[Bracketed]

DOCUMENT REQUEST APPROVED (Division or Department)

Signature [illegible] Date 8/27/96

Signature Date

THE REMAINDER OF THIS FORM TO BE COMPLETED BY THE TECHNICAL INFORMATION OFFICE

DISTRIBUTION

☐ Internal Distribution

External Distribution

TID-4500 Category _____ or _____ Copies to OSTI

ANNOUNCED IN: ERA Atomindex (Available from NTIS)

M-3679 Category

ANNOUNCE IN: ☐ AWDR (Available from OSTI) ☐ ANCR

Distribution:	UCN-7721B	DOE F-1332.15	Document
Y-12 Central Files	Y-12 RC	Y-12 RC	Y-12 RC
TIO File	L.L. McCauley		
	S.W. Wiley		
	R.M. Keyser		

Distribution Remarks: Unlimited (ChemRisk)

APPROVAL AND RELEASE

Date Received | Date Initiated 8/27/96

☒ CLASSIFICATIONS

Title(s): U Abstract —

DOCUMENT:

Level U (w/ DELETIONS) Category —

Weapons Data — Sigma —

Y-12 Classification Office 8/28/96 Date

☐ Editor Date

☒ Patent Office [illegible] Date

☐ Date

☐ Date

APPROVED FOR: ☐ Declassification ☐ Release subject to use of the following admonitory markings and conditions:

☐ Disclaimer ☐ Copyright ☐ Patent Caution ☐ Other

Technical Information Office 9/3/96 Date

Conditions/Remarks.

Y/TS-1565 / DEL REV

(Title)

TRITIUM IN D_2 GAS

Authorized Derivative Classifier

R J Fraser 8/28/96

Authorized Signature Date

Authorized Derivative Declassifier

R Bayford Jr 8/28/96

Authorized Signature Date

This material has been reviewed by the Y-12 Classification office and has been determined to be UNCLASSIFIED.

APPROVED FOR PUBLIC RELEASE

9/3/96

Technical Information Office Date

THIS PAGE MUST NOT BE SEPARATED FROM THE ATTACHED DOCUMENT

TRITI 2 IN D_2 GAS

BWR

7-5 | TIME 2:40

WHILE YOU WERE OUT

NAME Jim Bogard

OF Health Physics

PHONE 4-3547

- [x] Telephoned
- [ ] Please Phone
- [ ] Called To See You
- [ ] Will Call Again
- [ ] Wants To See You
- [ ] RUSH
- [ ] Returned Your Call

MESSAGE Re: Tritium content of cylinders. He wanted a table of tritium values for a long enough period to get a good average value + the high and low ranges. I'll get this for him if you like

UCN-235
(12356 12-78)

(6-0833) - Rick Collier DOE - Safety Division
Mr. Nate King Los-Alamos -

150 - 300 ~~mg/gram~~ ?

nano / Curies

Coverage on 70 Sample lots
193 Nano Curies

Los

Reference Code and Definitions

max. .002 μCi/gram = Nano Curies = 2 Nano Curie

1-12-83	Reg #	940087 =	189 μCi/lb =	416.7	nCu/
1-27-83	Reg #	940167 =	141 μCi/lb =	310.4	
4-14-83	"	940276 =	122 μCi/lb. =	269.0	
4-18-83	"	940242 =	127 μCi/lb. =	280.0	
6-14-83	"	940332 =	58 μCi/lb. =	127.9	
6-14-83	"	940349 =	57 μCi/lb. =	125.7	
6-14-83	"	940359 =	80 μCi/lb. =	176.4	nanocuri.

Max. 2 Nano Curie/Gram Average grams – 900 gram/Per Cyl. Max. ~~1000~~ Nano Curie

Los Alamos -

3-16-83

filled 3-2-83 from C-Bank

(Chemist) - Paul Guthals – FTS 8-843-4039

Hop Wet 4-3536

92543 Stefan

3-28

Date	Reg #	mrem 10^3 / mCi/lb.	=	mrem 10^3 / [illegible]
1-12-76	535702	56	=	123.3
1-12-76	535768	54	=	118.9
4-29-76	535810	50	=	110.1
4-29-76	535856	48	=	105.7
4-29-76	535913	46	=	101.3
10-21-76	535994	72	=	158.6
10-21-76	649798	65	=	143.2
10-21-76	649808	65	=	143.2
10-21-76	649810	58	=	127.8
10-20-76	649892	36	=	79.3
11-5-76	649928	43	=	94.7
6-9-77	789101	10	=	22.0
5-23-79	789648	60	=	132.2
1-22-80	789895	137	=	301.8
7-11-76	457242	154	=	339.2
[illegible]	188590 -	381	=	839.2
[illegible]	442367 -	129	=	284.1
[illegible]	[illegible]	199	=	411.7
[illegible]	940167	141	=	[illegible]
[illegible]	940242	[illegible]	=	[illegible]
[illegible]	[illegible]	[illegible]	=	[illegible]
[illegible]	[illegible]	[illegible]	=	[illegible]
[illegible]	[illegible]	57	=	[illegible]
[illegible]	[illegible]	[illegible]	=	[illegible]

HSEA83D-0721-120

UNION CARBIDE

NUCLEAR DIVISION

JUL 22 1983
Chemistry

July 21, 1983

F. V. Tilson, 9201-5, MS 4

Shipping Requirements--Tritium-Contaminated Deuterium

We have reviewed, at your request, the newly revised (July 1, 1983) Code of Federal Regulations, Title 49 (49 CFR), as it pertains to the shipment of compressed deuterium coincidentally contaminated with tritium. The specific activity of tritium-contaminated deuterium leaving the Y-12 Plant typically lies above the limiting lower value which defines *radioactive material* in 49 CFR. The shipments may be further classified as either *limited quantity of radioactive material* or as *low specific activity material* (LSA), depending on the assay and total curie content.

Limited quantity shipments are exempt from marking, labeling, and placarding requirements. However, certain qualifications apply:

(1) The maximum radiation levels at the package surface may not exceed 0.5 millirem/hour;

(2) removable surface contamination on the outside of the package may not exceed 22 dis/min/cm^2; and

(3) the gas cylinders must bear the marking "Radioactive."

If the gas is shipped as LSA, the shipment is subject to all applicable marking, labeling, and placarding requirements as set forth in 49 CFR, § 172, Subparts D, E, and F. LSA may also be transported as *exclusive use* with some relaxation of contamination limits and marking and labeling restrictions. Requirements pertaining to other hazard classes (e.g., *Flammable gas*) into which the shipment falls also apply.

The shipping papers accompanying this material normally must list a complete description of each hazardous material in the container and a designation of the total quantity of each. We understand, however, that any reference to the amount or concentration of either deuterium or tritium in these shipments is classified SRD. We recommend that you consult with the Y-12 Classification Office and with the Shipping Department for further clarification of these requirements.

Interpretations of appropriate sections of 49 CFR are attached. Please direct questions to J. S. Bogard, 4-3547.

J. D. McLendon, 9711-1, MS 3 (4-3535)

JDM:JSB:ps

Attachment

cc: J. S. Bogard, 9711-1, MS 3 - NoRC
M. L. Jones, 9106, MS 5
E. Owings, 9723-10, MS 1
W. E. Ramsey, 9720-5, MS 1
J. C. White, 9704-2, MS 19

cc/att: R. P. Brotherton, 9204-2, MS 5
P. C. Hardin, 9103, MS 3
J. F. Manneschmidt, 9731, MS 2
B. W. Rea, 9204-2, MS 5
R. D. Yarbrough, 9720-8, MS 1

Hazardous Material Classification of Tritium-Contaminated Deuterium

Scope: This summary considers the hazardous material classification of deuterium shipped from Y-12 only as it applies to coincidental radioactive contamination by tritium. Deuterium and tritium both may meet criteria for definition in other hazard classes (e.g., *Flammable gas*) and thereby also be subject to regulations appropriate to those classes. The regulations applicable to transportation of hazardous materials are those set forth in the Code of Federal Regulations, Title 49 (amended July 1, 1983).

Background: Deuterium and tritium are isotopes of hydrogen that occur naturally. Deuterium is stable; but tritium is radioactive, with a 12.3-year half-life. Deuterium is produced commercially by chemical and physical fractionating methods applied to the hydrogen component of air; a certain amount of tritium is produced coincidentally with the deuterium because of its natural isotopic distribution. The Y-12 Plant receives deuterated water generated in this manner by other facilities, reduces the water to its elements, and separates the deuterium gas to industrial use. Tritium is carried along with the deuterium in each phase of production.

Tritium is a low-energy beta emitter with no associated gamma radiations. Its limiting activity concentration in air is 10,000 times that for enriched uranium (DOE 5480.1, Chg 2).

Definitions: "Radioactive material" means any material having a specific activity greater than 0.002 microcuries per gram (μCi/g). [49 CFR, § 173.403 (y)]

"Limited quantity of radioactive materials" means a quantity of radioactive material not exceeding certain curie amounts. For tritium, this limit is 20 Ci. [49 CFR, § 173.403 (m), § 173.423]

"Low specific activity material" (LSA) applies to certain ores and radionuclides, tritium oxide below a specified activity concentration, nonradioactive materials with external radiological contamination within certain limits, and to homogeneous mixtures of materials in which the activity concentration is below a limit established according to the nature of the radiological contaminant. A compressed gas contaminated by tritium may be classified LSA if the specific activity of the mixture does not exceed 0.3 millicurie/g (equivalent to 300 μCi/g). [49 CFR, § 173.403 (n), § 173.433]

"Exclusive use" means the sole use of a conveyance by a single consignor and for which all initial, intermediate, and final loading and unloading are carried out in accordance with the direction of the consignor or consignee. [49 CFR, § 173.403 (i)]

Applicable Regulations: Deuterium shipped from the Y-12 Plant typically contains sufficient tritium activity to be defined as *Radioactive material* according to 49 CFR. Depending on the assay and total curie content, the shipment may be further classified as either *Limited quantity* or *LSA*.

Deuterium shipped as *Limited quantity* is exempt from specification packaging, marking, and labeling if the following conditions are met:

(a) The material is packaged in strong, tight packages that will not leak during conditions normally incident to transportation;

(b) the radiation level at any point on the external surface of the package does not exceed 0.5 millirem per hour;

(c) the nonfixed (removable) radioactive surface contamination on the external surface of the package does not exceed 22 dis/min/cm^2;

(d) the outside of the compressed-gas cylinder bears the marking "Radioactive."

[49 CFR, § 173.421, § 173.423, § 173.443 (a)]

Deuterium shipped as *LSA* is subject to all marking, labeling, and placarding requirements as set forth in 49 CFR, § 172, Subparts D, E, and F. It may also be shipped as *exclusive use* and excepted from specification packaging, marking, and labeling, subject to the following conditions:

(a) The material is packaged in strong, tight packages that will not leak during conditions normally incident to transportation;

(b) the nonfixed (removable) radioactive surface contamination on the external surface does not exceed 220 dis/min/cm^2;

(c) the radiation level at any point on the external surface of the package or outer surface of the vehicle does not exceed 200 millirem per hour; does not exceed 10 millirem per hour at any point 2 meters from the outer surface of the vehicle; and does not exceed 2 millirem per hour at any normally occupied position in the vehicle.

(d) shipments are loaded by the consignor and unloaded by the consignee from the transport vehicle in which originally loaded;

(e) there is no loose radioactive material in the car or vehicle;

(f) the shipment is braced to prevent shifting of lading under conditions normally incident to transportation;

(g) the transport vehicle is placarded in accordance with 49 CFR, § 172, Subpart F;

(h) the exterior of each outside package is marked "Radioactive - LSA";

(i) specific instructions for maintenance of exclusive use shipment controls are provided by the shipper to the carrier and included with the shipping paper information;

(j) transportation by aircraft is prohibited.

[49 CFR, § 173.425 (b), § 173.443, § 173.441]

J. S. Bogard

UCN-7721B
(2 1-86)

OAK RIDGE Y-12 PLANT INFORMATION CONTROL FORM

8/20 ChemRisk 8/

DOCUMENT DESCRIPTION (Completed By Requesting Division)

Document No.	Author's Telephone No.	Acct. No.	Date of Request
Y/TS-1565/DEL REV	6-0263	2366000 3	08/27/96

Classified Title: TRITIUM IN D_2 GAS (FROM L. HEADRICK, 9204-2)

Author(s) Requestor: Steve Wiley

TYPE: ☐ Formal Report ☐ Informal Report ☐ Progress/Status Report ☐ Co-Op Report ☐ Thesis/Term Paper

☐ Oral Presentation (identify meeting, sponsor, location, date):

☐ Journal Article (Identify Journal):

☒ Other (Specify): To Be Released to ChemRisk, Phase II

Document will be published in proceedings ☑ No ☐ Yes

Document will be distributed at meeting ☑ No ☐ Yes 10 pp

Document has patent or invention significance ☑ No ☐ Yes (Identify)

Document has been previously released ☑ No ☐ Yes (Reference)

DIVISION REVIEW AND APPROVAL (Completed By Requesting Division)

TECHNICAL CLASSIFICATION REVIEW (Divisional Classification Representative)

Title(s): U Abstract: NA

DOCUMENT: Level S R&D Category —

[Bracketed] Signature 8/27/96 Date

DOCUMENT REQUEST APPROVED (Division or Department)

Signature 8/27/96 Date

Signature Date

THE REMAINDER OF THIS FORM TO BE COMPLETED BY THE TECHNICAL INFORMATION OFFICE

DISTRIBUTION

☐ Internal Distribution

☐ External Distribution

TID-4500 Category _____ or _____ Copies to OSTI

ANNOUNCED IN: ERA Atomindex (Available from NTIS)

M-3679 Category

ANNOUNCE IN: ☐ AWDR (Available from OSTI) ☐ ANCR

Distribution:	UCN-7721B	DOE F-1332.15	Document
Y-12 Central Files	Y-12 RC	Y-12 RC	Y-12 RC
TIO File	L.L. McCauley		
	S.W. Wiley		
	R.M. Keyser		

Distribution Remarks: Unlimited (ChemRisk)

APPROVAL AND RELEASE

Date Received | Date Initiated 8/27/96

☐ Editor Date

☐ Patent Office Date

☐ Date

☐ Date

☒ CLASSIFICATIONS

Title(s) U Abstract —

DOCUMENT:

Level U (w/ DELETIONS) Category —

Weapons Data — Sigma —

Y-12 Classification Office 8/28/96 Date

APPROVED FOR: ☐ Declassification ☐ Release subject to use of the following admonitory markings and conditions:

☐ Disclaimer ☐ Copyright ☐ Patent Caution ☐ Other

Technical Information Office 9/3/96 Date

Conditions/Remarks

DOE-OR QA
Malcolm Theisen
EASI 10.96
Date

Hazardous Material Classification of Tritium-Contaminated Deuterium

Scope: This summary considers the hazardous material classification of deuterium shipped from Y-12 only as it applies to coincidental radioactive contamination by tritium. Deuterium and tritium both may meet criteria for definition in other hazard classes (e.g., *Flammable gas*) and thereby also be subject to regulations appropriate to those classes. The regulations applicable to transportation of hazardous materials are those set forth in the Code of Federal Regulations, Title 49 (amended July 1, 1983).

Background: Deuterium and tritium are isotopes of hydrogen that occur naturally. Deuterium is stable; but tritium is radioactive, with a 12.3-year half-life. Deuterium is produced commercially by chemical and physical fractionating methods applied to the hydrogen component of air; a certain amount of tritium is produced coincidentally with the deuterium because of its natural isotopic distribution. The Y-12 Plant receives deuterated water generated in this manner by other facilities, reduces the water to its elements, and separates the deuterium gas to industrial use. Tritium is carried along with the deuterium in each phase of production.

Tritium is a low-energy beta emitter with no associated gamma radiations. Its limiting activity concentration in air is 10,000 times that for enriched uranium (DOE 5480.1, Chg 2).

Definitions: "Radioactive material" means any material having a specific activity greater than 0.002 microcuries per gram (μCi/g). [49 CFR, § 173.403 (y)]

"Limited quantity of radioactive materials" means a quantity of radioactive material not exceeding certain curie amounts. For tritium, this limit is 20 Ci. [49 CFR, § 173.403 (m), § 173.423]

"Low specific activity material" (LSA) applies to certain ores and radionuclides, tritium oxide below a specified activity concentration, nonradioactive materials with external radiological contamination within certain limits, and to homogeneous mixtures of materials in which the activity concentration is below a limit established according to the nature of the radiological contaminant. A compressed gas contaminated by tritium may be classified LSA if the specific activity of the mixture does not exceed 0.3 millicurie/g (equivalent to 300 μCi/g). [49 CFR, § 173.403 (n), § 173.433]

"Exclusive use" means the sole use of a conveyance by a single consignor and for which all initial, intermediate, and final loading and unloading are carried out in accordance with the direction of the consignor or consignee. [49 CFR, § 173.403 (i)]

Applicable Regulations: Deuterium shipped from the Y-12 Plant typically contains sufficient tritium activity to be defined as *Radioactive material* according to 49 CFR. Depending on the assay and total curie content, the shipment may be further classified as either *Limited quantity* or *LSA*.

Deuterium shipped as *Limited quantity* is exempt from specification packaging, marking, and labeling if the following conditions are met:

(a) The material is packaged in strong, tight packages that will not leak during conditions normally incident to transportation;

(b) the radiation level at any point on the external surface of the package does not exceed 0.5 millirem per hour;

(c) the nonfixed (removable) radioactive surface contamination on the external surface of the package does not exceed 22 dis/min/cm^2;

(d) the outside of the compressed-gas cylinder bears the marking "Radioactive."

[49 CFR, § 173.421, § 173.423, § 173.443 (a)]

Deuterium shipped as *LSA* is subject to all marking, labeling, and placarding requirements as set forth in 49 CFR, § 172, Subparts D, E, and F. It may also be shipped as *exclusive use* and excepted from specification packaging, marking, and labeling, subject to the following conditions:

(a) The material is packaged in strong, tight packages that will not leak during conditions normally incident to transportation;

(b) the nonfixed (removable) radioactive surface contamination on the external surface does not exceed 220 dis/min/cm^2;

(c) the radiation level at any point on the external surface of the package or outer surface of the vehicle does not exceed 200 millirem per hour; does not exceed 10 millirem per hour at any point 2 meters from the outer surface of the vehicle; and does not exceed 2 millirem per hour at any normally occupied position in the vehicle.

(d) shipments are loaded by the consignor and unloaded by the consignee from the transport vehicle in which originally loaded;

(e) there is no loose radioactive material in the car or vehicle;

(f) the shipment is braced to prevent shifting of lading under conditions normally incident to transportation;

(g) the transport vehicle is placarded in accordance with 49 CFR, § 172, Subpart F;

(h) the exterior of each outside package is marked "Radioactive - LSA";

(i) specific instructions for maintenance of exclusive use shipment controls are provided by the shipper to the carrier and included with the shipping paper information;

(j) transportation by aircraft is prohibited.

[49 CFR, § 173.425 (b), § 173.443, § 173.441]

J. S. Bogard

Bnk

UNION CARBIDE

NUCLEAR DIVISION

SEP 1 1983

August 31, 1983

J. S. Bogard, 9711-1, MS-3

Specific Activity of Tritium

Confirming our telephone conversation regarding specific activity of tritium in deuterium shipments, the Y-12 Classification Office has determined that the specific activity of the tritium present in classified deuterium shipments will not reveal classified information, i.e., the amount of deuterium in the shipment. In order to calculate the amount of deuterium, it would be necessary to know: (1) tritium analysis, (2) container volume, and (3) container pressure. Therefore, you may handle the specific activity as an Unclassified parameter.

If you have any questions regarding this subject, please feel free to contact me.

J. W. Freels

J. W. Freels, 9731, MS-2, 4-3835

JWF:jak

cc: J. M. Bauer, SRO
R. P. Brotherton, 9204-2, MS-5
J. K. Cox, 9720-8, MS-1
T. F. Davis, ORO
P. C. Hardin, 9103, MS-3
M. L. Jones, 9106, MS-5
J. M. Mills, Jr., 9731, MS-2/J. W. Freels (RC)
S. W. O'Rear, SRP
E. Owings, 9723-10, MS-5
W. E. Ramsey, 9720-5, MS-5
B. W. Rea, 9204-2, MS-5
J. C. White, 9704-2, MS-19
R. D. Yarbrough, 9720-8, MS-1

NUCLEAR DIVISION

JUL 22 1983

July 21, 1983

F. V. Tilson, 9201-5, MS 4

Shipping Requirements--Tritium-Contaminated Deuterium

We have reviewed, at your request, the newly revised (July 1, 1983) Code of Federal Regulations, Title 49 (49 CFR), as it pertains to the shipment of compressed deuterium coincidentally contaminated with tritium. The specific activity of tritium-contaminated deuterium leaving the Y-12 Plant typically lies above the limiting lower value which defines *radioactive material* in 49 CFR. The shipments may be further classified as either *limited quantity of radioactive material* or as *low specific activity material* (LSA), depending on the assay and total curie content.

Limited quantity shipments are exempt from marking, labeling, and placarding requirements. However, certain qualifications apply:

(1) The maximum radiation levels at the package surface may not exceed 0.5 millirem/hour;

(2) removable surface contamination on the outside of the package may not exceed 22 dis/min/cm^2; and

(3) the gas cylinders must bear the marking "Radioactive."

If the gas is shipped as LSA, the shipment is subject to all applicable marking, labeling, and placarding requirements as set forth in 49 CFR, § 172, Subparts D, E, and F. LSA may also be transported as *exclusive use* with some relaxation of contamination limits and marking and labeling restrictions. Requirements pertaining to other hazard classes (e.g., *Flammable gas*) into which the shipment falls also apply.

The shipping papers accompanying this material normally must list a complete description of each hazardous material in the container and a designation of the total quantity of each. We understand, however, that any reference to the amount or concentration of either deuterium or tritium in these shipments is classified SRD. We recommend that you consult with the Y-12 Classification Office and with the Shipping Department for further clarification of these requirements.

Interpretations of appropriate sections of 49 CFR are attached. Please direct questions to J. S. Bogard, 4-3547.

J. D. McLendon, 9711-1, MS 3 (4-3535)

JDM:JSB:ps

Attachment

cc: J. S. Bogard, 9711-1, MS 3 - NoRC
M. L. Jones, 9106, MS 5
E. Owings, 9723-10, MS 1
W. E. Ramsey, 9720-5, MS 1
J. C. White, 9704-2, MS 19

cc/att: R. P. Brotherton, 9204-2, MS 5
P. C. Hardin, 9103, MS 3
J. F. Manneschmidt, 9731, MS 2
B. W. Rea, 9204-2, MS 5
R. D. Yarbrough, 9720-8, MS 1

Hazardous Material Classification of Tritium-Contaminated Deuterium

Scope: This summary considers the hazardous material classification of deuterium shipped from Y-12 only as it applies to coincidental radioactive contamination by tritium. Deuterium and tritium both may meet criteria for definition in other hazard classes (e.g., *Flammable gas*) and thereby also be subject to regulations appropriate to those classes. The regulations applicable to transportation of hazardous materials are those set forth in the Code of Federal Regulations, Title 49 (amended July 1, 1983).

Background: Deuterium and tritium are isotopes of hydrogen that occur naturally. Deuterium is stable; but tritium is radioactive, with a 12.3-year half-life. Deuterium is produced commercially by chemical and physical fractionating methods applied to the hydrogen component of air; a certain amount of tritium is produced coincidentally with the deuterium because of its natural isotopic distribution. The Y-12 Plant receives deuterated water generated in this manner by other facilities, reduces the water to its elements, and separates the deuterium gas to industrial use. Tritium is carried along with the deuterium in each phase of production.

Tritium is a low-energy beta emitter with no associated gamma radiations. Its limiting activity concentration in air is 10,000 times that for enriched uranium (DOE 5480.1, Chg 2).

Definitions: "Radioactive material" means any material having a specific activity greater than 0.002 microcuries per gram (μCi/g). [49 CFR, § 173.403 (y)]

"Limited quantity of radioactive materials" means a quantity of radioactive material not exceeding certain curie amounts. For tritium, this limit is 20 Ci. [49 CFR, § 173.403 (m), § 173.423]

"Low specific activity material" (LSA) applies to certain ores and radionuclides, tritium oxide below a specified activity concentration, nonradioactive materials with external radiological contamination within certain limits, and to homogeneous mixtures of materials in which the activity concentration is below a limit established according to the nature of the radiological contaminant. A compressed gas contaminated by tritium may be classified LSA if the specific activity of the mixture does not exceed 0.3 millicurie/g (equivalent to 300 μCi/g). [49 CFR, § 173.403 (n), § 173.433]

"Exclusive use" means the sole use of a conveyance by a single consignor and for which all initial, intermediate, and final loading and unloading are carried out in accordance with the direction of the consignor or consignee. [49 CFR, § 173.403 (i)]

Applicable Regulations: Deuterium shipped from the Y-12 Plant typically contains sufficient tritium activity to be defined as *Radioactive material* according to 49 CFR. Depending on the assay and total curie content, the shipment may be further classified as either *Limited quantity* or *LSA*.

Deuterium shipped as *Limited quantity* is exempt from specification packaging, marking, and labeling if the following conditions are met:

(a) The material is packaged in strong, tight packages that will not leak during conditions normally incident to transportation;

(b) the radiation level at any point on the external surface of the package does not exceed 0.5 millirem per hour;

(c) the nonfixed (removable) radioactive surface contamination on the external surface of the package does not exceed 22 dis/min/cm^2;

(d) the outside of the compressed-gas cylinder bears the marking "Radioactive."

[49 CFR, § 173.421, § 173.423, § 173.443 (a)]

Deuterium shipped as *LSA* is subject to all marking, labeling, and placarding requirements as set forth in 49 CFR, § 172, Subparts D, E, and F. It may also be shipped as *exclusive use* and excepted from specification packaging, marking, and labeling, subject to the following conditions:

(a) The material is packaged in strong, tight packages that will not leak during conditions normally incident to transportation;

(b) the nonfixed (removable) radioactive surface contamination on the external surface does not exceed 220 dis/min/cm^2;

(c) the radiation level at any point on the external surface of the package or outer surface of the vehicle does not exceed 200 millirem per hour; does not exceed 10 millirem per hour at any point 2 meters from the outer surface of the vehicle; and does not exceed 2 millirem per hour at any normally occupied position in the vehicle.

(d) shipments are loaded by the consignor and unloaded by the consignee from the transport vehicle in which originally loaded;

(e) there is no loose radioactive material in the car or vehicle;

(f) the shipment is braced to prevent shifting of lading under conditions normally incident to transportation;

(g) the transport vehicle is placarded in accordance with 49 CFR, § 172, Subpart F;

(h) the exterior of each outside package is marked "Radioactive - LSA";

(i) specific instructions for maintenance of exclusive use shipment controls are provided by the shipper to the carrier and included with the shipping paper information;

(j) transportation by aircraft is prohibited.

[49 CFR, § 173.425 (b), § 173.443, § 173.441]

J. S. Bogard

NUCLEAR DIVISION

JUL 22 1983

July 21, 1983

F. V. Tilson, 9201-5, MS 4

Shipping Requirements--Tritium-Contaminated Deuterium

We have reviewed, at your request, the newly revised (July 1, 1983) Code of Federal Regulations, Title 49 (49 CFR), as it pertains to the shipment of compressed deuterium coincidentally contaminated with tritium. The specific activity of tritium-contaminated deuterium leaving the Y-12 Plant typically lies above the limiting lower value which defines *radioactive material* in 49 CFR. The shipments may be further classified as either *limited quantity of radioactive material* or as *low specific activity material* (LSA), depending on the assay and total curie content.

Limited quantity shipments are exempt from marking, labeling, and placarding requirements. However, certain qualifications apply:

(1) The maximum radiation levels at the package surface may not exceed 0.5 millirem/hour;

(2) removable surface contamination on the outside of the package may not exceed 22 dis/min/cm^2; and

(3) the gas cylinders must bear the marking "Radioactive."

If the gas is shipped as LSA, the shipment is subject to all applicable marking, labeling, and placarding requirements as set forth in 49 CFR, § 172, Subparts D, E, and F. LSA may also be transported as *exclusive use* with some relaxation of contamination limits and marking and labeling restrictions. Requirements pertaining to other hazard classes (e.g., *Flammable gas*) into which the shipment falls also apply.

The shipping papers accompanying this material normally must list a complete description of each hazardous material in the container and a designation of the total quantity of each. We understand, however, that any reference to the amount or concentration of either deuterium or tritium in these shipments is classified SRD. We recommend that you consult with the Y-12 Classification Office and with the Shipping Department for further clarification of these requirements.

Interpretations of appropriate sections of 49 CFR are attached. Please direct questions to J. S. Bogard, 4-3547.

J. D. McLendon, 9711-1, MS 3 (4-3535)

JDM:JSB:ps

Attachment

cc: J. S. Bogard, 9711-1, MS 3 - NoRC
M. L. Jones, 9106, MS 5
E. Owings, 9723-10, MS 1
W. E. Ramsey, 9720-5, MS 1
J. C. White, 9704-2, MS 19

cc/att: R. P. Brotherton, 9204-2, MS 5
P. C. Hardin, 9103, MS 3
J. F. Manneschmidt, 9731, MS 2
B. W. Rea, 9204-2, MS 5
R. D. Yarbrough, 9720-8, MS 1

Hazardous Material Classification of Tritium-Contaminated Deuterium

Scope: This summary considers the hazardous material classification of deuterium shipped from Y-12 only as it applies to coincidental radioactive contamination by tritium. Deuterium and tritium both may meet criteria for definition in other hazard classes (e.g., *Flammable gas*) and thereby also be subject to regulations appropriate to those classes. The regulations applicable to transportation of hazardous materials are those set forth in the Code of Federal Regulations, Title 49 (amended July 1, 1983).

Background: Deuterium and tritium are isotopes of hydrogen that occur naturally. Deuterium is stable; but tritium is radioactive, with a 12.3-year half-life. Deuterium is produced commercially by chemical and physical fractionating methods applied to the hydrogen component of air; a certain amount of tritium is produced coincidentally with the deuterium because of its natural isotopic distribution. The Y-12 Plant receives deuterated water generated in this manner by other facilities, reduces the water to its elements, and separates the deuterium gas to industrial use. Tritium is carried along with the deuterium in each phase of production.

Tritium is a low-energy beta emitter with no associated gamma radiations. Its limiting activity concentration in air is 10,000 times that for enriched uranium (DOE 5480.1, Chg 2).

Definitions: "Radioactive material" means any material having a specific activity greater than 0.002 microcuries per gram (μCi/g). [49 CFR, § 173.403 (y)]

"Limited quantity of radioactive materials" means a quantity of radioactive material not exceeding certain curie amounts. For tritium, this limit is 20 Ci. [49 CFR, § 173.403 (m), § 173.423]

"Low specific activity material" (LSA) applies to certain ores and radionuclides, tritium oxide below a specified activity concentration, nonradioactive materials with external radiological contamination within certain limits, and to homogeneous mixtures of materials in which the activity concentration is below a limit established according to the nature of the radiological contaminant. A compressed gas contaminated by tritium may be classified LSA if the specific activity of the mixture does not exceed 0.3 millicurie/g (equivalent to 300 μCi/g). [49 CFR, § 173.403 (n), § 173.433]

"Exclusive use" means the sole use of a conveyance by a single consignor and for which all initial, intermediate, and final loading and unloading are carried out in accordance with the direction of the consignor or consignee. [49 CFR, § 173.403 (i)]

Applicable Regulations: Deuterium shipped from the Y-12 Plant typically contains sufficient tritium activity to be defined as *Radioactive material* according to 49 CFR. Depending on the assay and total curie content, the shipment may be further classified as either *Limited quantity* or *LSA*.

Deuterium shipped as *Limited quantity* is exempt from specification packaging, marking, and labeling if the following conditions are met:

(a) The material is packaged in strong, tight packages that will not leak during conditions normally incident to transportation;

(b) the radiation level at any point on the external surface of the package does not exceed 0.5 millirem per hour;

(c) the nonfixed (removable) radioactive surface contamination on the external surface of the package does not exceed 22 dis/min/cm^2;

(d) the outside of the compressed-gas cylinder bears the marking "Radioactive."

[49 CFR, § 173.421, § 173.423, § 173.443 (a)]

Deuterium shipped as *LSA* is subject to all marking, labeling, and placarding requirements as set forth in 49 CFR, § 172, Subparts D, E, and F. It may also be shipped as *exclusive use* and excepted from specification packaging, marking, and labeling, subject to the following conditions:

(a) The material is packaged in strong, tight packages that will not leak during conditions normally incident to transportation;

(b) the nonfixed (removable) radioactive surface contamination on the external surface does not exceed 220 dis/min/cm^2;

(c) the radiation level at any point on the external surface of the package or outer surface of the vehicle does not exceed 200 millirem per hour; does not exceed 10 millirem per hour at any point 2 meters from the outer surface of the vehicle; and does not exceed 2 millirem per hour at any normally occupied position in the vehicle.

(d) shipments are loaded by the consignor and unloaded by the consignee from the transport vehicle in which originally loaded;

(e) there is no loose radioactive material in the car or vehicle;

(f) the shipment is braced to prevent shifting of lading under conditions normally incident to transportation;

(g) the transport vehicle is placarded in accordance with 49 CFR, § 172, Subpart F;

(h) the exterior of each outside package is marked "Radioactive - LSA";

(i) specific instructions for maintenance of exclusive use shipment controls are provided by the shipper to the carrier and included with the shipping paper information;

(j) transportation by aircraft is prohibited.

[49 CFR, § 173.425 (b), § 173.443, § 173.441]

J. S. Bogard

(2 1-86) OAK RIDGE Y-12 PLANT INFORMATION CONTROL CENTER

DOCUMENT DESCRIPTION (Completed By Requesting Division)

Document No.	Author's Telephone No.	Acct. No.	Date of Request
Y/TS-1567/DEL REV	6-0263	2366000 3	08/27/96

Unclassified Title: TRITIUM ANALYSIS ON D_2 GAS (FROM L. HEADRICK, 9204-2)

Author(s): Requestor: Steve Wiley

TYPE: ☐ Formal Report ☐ Informal Report ☐ Progress/Status Report ☐ Co-Op Report ☐ Thesis/Term Paper

☐ Oral Presentation (identify meeting, sponsor, location, date):

☐ Journal Article (Identify Journal):

☒ Other (Specify): To Be Released to ChemRisk, Phase II

Document will be published in proceedings ☑ No ☐ Yes

Document will be distributed at meeting ☑ No ☐ Yes

Document has patent or invention significance ☑ No ☐ Yes (Identify)

Document has been previously released ☑ No ☐ Yes (Reference)

DIVISION REVIEW AND APPROVAL (Completed By Requesting Division)

TECHNICAL CLASSIFICATION REVIEW (Divisional Classification Representative)

Title(s): U Abstract: NA

DOCUMENT: Level SECRET Category RD

R.F. Fraser 8/28/96
Signature Date
[Bracketed]

DOCUMENT REQUEST APPROVED (Division or Department)

Signature 8/27/96 Date

Signature Date

THE REMAINDER OF THIS FORM TO BE COMPLETED BY THE TECHNICAL INFORMATION OFFICE

DISTRIBUTION

☐ Internal Distribution

☐ External Distribution

TID-4500 Category _____ or _____ Copies to OSTI

ANNOUNCED IN: ERA Atomindex (Available from NTIS)

M-3679 Category

ANNOUNCE IN: ☐ AWDR (Available from OSTI) ☐ ANCR

Distribution:	UCN-7721B	DOE F-1332.15	Document
Y-12 Central Files	Y-12 RC	Y-12 RC	Y-12 RC
TIO File	L.L. McCauley		
	S.W. Wiley		
	R.M. Keyser		

Distribution Remarks: Unlimited (ChemRisk)

APPROVAL AND RELEASE

Date Received | Date Initiated 8/27/96

☑ CLASSIFICATIONS:

Title(s): U Abstract —

DOCUMENT:

Level U (W/DELETIONS) Category —

Weapons Data — Sigma —

8/28/96
Y-12 Classification Office Date

☐ Editor Date

☒ Patent Office Date

☐ Date

☐ Date

APPROVED FOR: ☐ Declassification ☐ Release subject to use of the following admonitory markings and conditions:

☐ Disclaimer ☐ Copyright ☐ Patent Caution ☐ Other

Technical Information Office 9/3/96 Date

Conditions/Remarks:

Y/TS-1567/DEL REV

(Title)

TRITIUM ANALYSIS ON D_2 GAS

Authorized Derivative Classifier

Authorized Signature — Date 8/28/96

Authorized Derivative Declassifier

Authorized Signature — Date 8/28/96

This material has been reviewed by the Y-12 Classification office and has been determined to be UNCLASSIFIED.

APPROVED FOR PUBLIC RELEASE

Technical Information Office — Date 9/3/96

THIS PAGE MUST NOT BE SEPARATED FROM THE ATTACHED DOCUMENT

195^n - 1960

Tritium Analysis
on D_2 gas

BATCH NUMBER	REQUISITION NUMBER
—	955882

REPORT TO: R. P. Brotherton

BUILDING NO. 9204-2 PHONE: 78484

DESCRIPTION OF MATERIAL: Gas

ASSAY REQUESTED AT ☐ DT ☐	AT CODE NO.
ANALYSIS REQUESTED	REPORTED ANSWERS
GRAM U /GRAM	
mc/lb.	1465 μc/lb

SIGNED:

BY: DATE JUN 15 1959

BATCH NUMBER	REQUISITION NUMBER
TRITIUM	955884

REPORT TO: R.P. BROTHERTON

BUILDING NO. 9805-1 PHONE: 7359

DESCRIPTION OF MATERIAL: GAS

ASSAY REQUESTED AT ☐ DT ☐	AT CODE NO.
ANALYSIS REQUESTED	REPORTED ANSWERS
GRAM U /GRAM	
mc/lb.	891 μc/lb

SIGNED:

BY: DATE JUL 7 1959

BATCH NUMBER	REQUISITION NUMBER
TRITIUM Sample # 2529	955888

REPORT TO: R.P. Brotherton

BUILDING NO. 9204-2 PHONE: 78485

DESCRIPTION OF MATERIAL: Gas

ASSAY REQUESTED AT ☐ DT ☐	AT CODE NO.
ANALYSIS REQUESTED	REPORTED ANSWERS
GRAM U /GRAM	
mc/lb	972 μc/lb

SIGNED:

BY: DATE AUG 11 1959

BATCH NUMBER	REQUISITION NUMBER
TRITIUM	955891

REPORT TO: Brotherton

BUILDING NO. 9204-2 PHONE: 78484

DESCRIPTION OF MATERIAL: GAS

ASSAY REQUESTED AT ☐ DT ☐	AT CODE NO.
ANALYSIS REQUESTED	REPORTED ANSWERS
GRAM U /GRAM	
mc/lb	826 μc/lb

SIGNED:

BY: DATE SEP 23 1959

TRITIUM	955892
BATCH NUMBER	REQUISITION NUMBER

REPORT TO: Brotherton

BUILDING NO. 9204-2 PHONE: 7-8484

DESCRIPTION OF MATERIAL:

ASSAY REQUESTED AT ☐ DT ☐	AT CODE NO.	
ANALYSIS REQUESTED	REPORTED ANSWERS	
GRAM U /GRAM		
MC/lb		
tritium	1097.4 μc/lb	

SIGNED:

BY:

DATE OCT 22 1959

tritium	955893
BATCH NUMBER	REQUISITION NUMBER

REPORT TO: Brotherton

BUILDING NO. 9204-2 PHONE: 7-8484

DESCRIPTION OF MATERIAL:

gas

ASSAY REQUESTED AT ☐ DT ☐	AT CODE NO.	
ANALYSIS REQUESTED	REPORTED ANSWERS	
GRAM U /GRAM		
MC/lb	= 1350.4 μc/lb	

SIGNED:

BY:

DATE OCT 29 1959

weekly Sample	955894
BATCH NUMBER	REQUISITION NUMBER

REPORT TO: R.P. Brotherton

BUILDING NO 9204-2 PHONE: 7359

DESCRIPTION TERIAL:

45

ASSAY REQUESTED AT ☐ DT ☐	AT CODE NO.	
ANALYSIS REQUESTED	REPORTED ANSWERS	
GRAM U /GRAM		
Mc/lb	1602 μc/lb	

SIGNED:

BY:

DATE NOV 9 1959

Tritium	955896
BATCH NUMBER	REQUISITION NUMBER

REPORT TO: R.P. Brotherton

BUILDING NO. 9204-2 PHONE: 7359

DESCRIPTION OF MATERIAL:

G25

ASSAY REQUESTED AT ☐ DT ☐	AT CODE NO.	
ANALYSIS REQUESTED	REPORTED ANSWERS	
GRAM U /GRAM		
mc/lb	1308 μc/lb	

SIGNED:

BY:

DATE NOV 20 1959

Weekly Sample	955897
BATCH NUMBER	REQUISITION NUMBER

REPORT TO: R. Brotherton

BUILDING NO. 9204-2 PHONE: 7359

DESCRIPTION OF MATERIAL: Gas

ASSAY REQUESTED AT ☐ DT ☐ | AT CODE NO.

ANALYSIS REQUESTED	REPORTED ANSWERS
GRAM U /GRAM	
mc/lb.	3183 Kc/lb

SIGNED:

BY: DATE JAN 12 1960

TRITIUM	955898
BATCH NUMBER	REQUISITION NUMBER

REPORT TO: Brotherton

BUILDING NO. 9805-1 PHONE:

DESCRIPTION OF MATERIAL: GAS

ASSAY REQUESTED AT ☐ DT ☐ | AT CODE NO.

ANALYSIS REQUESTED	REPORTED ANSWERS
GRAM U /GRAM	
Tritium Mc PER LB.	2461.8 MC/LB

SIGNED:

BY: DATE JAN 21 1960

TRITIUM	955899
BATCH NUMBER	REQUISITION NUMBER

REPORT TO: R. P. Brotherton

BUILDING NO. 9204-2 PHONE: 7359

DESCRIPTION OF MATERIAL: GAS

ASSAY REQUESTED AT ☐ DT ☐ | AT CODE NO.

ANALYSIS REQUESTED	REPORTED ANSWERS
GRAM U /GRAM	
~~T~~	
~~Kr~~	
Tritium only	2194.8 mc/lb

SIGNED:

BY: DATE JAN 29 1960

TRITIUM	956600
BATCH NUMBER	REQUISITION NUMBER

REPORT TO: R.P. Brotherton

BUILDING NO. 9204-2 PHONE: —

DESCRIPTION OF MATERIAL: Gas

ASSAY REQUESTED AT ☐ DT ☐ | AT CODE NO.

ANALYSIS REQUESTED	REPORTED ANSWERS
GRAM U /GRAM	
% Tritium	2177 Kc/lb

SIGNED:

BY: DATE FEB 9 1960

Weekly Sample	956601
BATCH NUMBER	REQUISITION NUMBER

REPORT TO: R. P. Brotherton
MAR 23 AM 8:33
BUILDING NO. 9204-2 PHONE: 7359

DESCRIPTION OF MATERIAL:
RECEIVED

ASSAY REQUESTED AT ☐ DT ☐	AT CODE NO.
ANALYSIS REQUESTED	REPORTED ANSWERS
GRAM U /GRAM	
mc/lb.	2693

SIGNED:
BY: MAR 24 1960 DATE

Tritium	956602
BATCH NUMBER	REQUISITION NUMBER

REPORT TO: Brotherton
BUILDING NO. 9204-2 PHONE: 7359

DESCRIPTION OF MATERIAL:
gas

ASSAY REQUESTED AT ☐ DT ☐	AT CODE NO.
ANALYSIS REQUESTED	REPORTED ANSWERS
GRAM U /GRAM	
~~assay~~	
~~gm Na~~	
~~gm Ca~~	
mc per lb	= 3191.8 lb/yr

SIGNED:
Y: APR 18 1960

Tritium Sample	956603
BATCH NUMBER	REQUISITION NUMBER

REPORT TO: R. Brotherton
BUILDING NO. 9204-2 PHONE: 7359

DESCRIPTION OF MATERIAL:
Gas

ASSAY REQUESTED AT ☐ DT ☐	AT CODE NO.
ANALYSIS REQUESTED	REPORTED ANSWERS
GRAM U /GRAM	
mc/lb	3417.93

SIGNED:
BY: DATE

Weekly Operation Sample	956604
BATCH NUMBER	REQUISITION NUMBER

REPORT TO: R. P. Brotherton
MAR 18 AM 8:33
BUILDING NO. 9204-2 PHONE: 7359

DESCRIPTION OF MATERIAL:
Gas RECEIVED

ASSAY REQUESTED AT ☐ DT ☐	AT CODE NO.
ANALYSIS REQUESTED	REPORTED ANSWERS
~~GRAM U /GRAM~~	
mc/lb.	= 3162

SIGNED:
BY: DATE

BATCH NUMBER	REQUISITION NUMBER
TRITIUM	956605

REPORT TO: R.P. Brotherton

BUILDING NO. 9204-2 PHONE: 7359

DESCRIPTION OF MATERIAL: Gas

ASSAY REQUESTED AT ☐ DT ☐ AT CODE NO.

ANALYSIS REQUESTED	REPORTED ANSWERS
GRAM U /GRAM	
% Tritium	3653.1 μc/lb

SIGNED: BY: DATE AUG 23 1960

BATCH NUMBER	REQUISITION NUMBER
	956606

REPORT TO: R.P. BROTHERTON

BUILDING NO. 9204-2 PHONE: 7359

DESCRIPTION OF MATERIAL: GAS

ASSAY REQUESTED AT ☐ DT ☐ AT CODE NO.

ANALYSIS REQUESTED	REPORTED ANSWERS
GRAM U /GRAM	
TRITIUM	3646 μc/lb

SIGNED: BY: DATE SEP 23 1960

BATCH NUMBER	REQUISITION NUMBER
TRITIUM	956607

REPORT TO: R.P. BROTHERTON

BUILDING NO. 9204-2 PHONE: 7359

DESCRIPTION OF MATERIAL: GAS

ASSAY REQUESTED AT ☐ DT ☐ AT CODE NO.

ANALYSIS REQUESTED	REPORTED ANSWERS
GRAM U /GRAM	
TRITIUM	3897 μc/lb

SIGNED: BY: DATE OCT 28 1960

BATCH NUMBER	REQUISITION NUMBER
TRITIUM	956608

REPORT TO: R.P. BROTHERTON

BUILDING NO. 9204-2 PHONE: 7359

DESCRIPTION OF MATERIAL: GAS

ASSAY REQUESTED AT ☐ DT ☐ AT CODE NO.

ANALYSIS REQUESTED	REPORTED ANSWERS
GRAM U /GRAM	
TRITIUM	3336.8 μc/lb

SIGNED: BY: DATE DEC 14 1960

Tritium	956609
BATCH NUMBER	REQUISITION NUMBER

REPORT TO: Brotherton

BUILDING NO. 9805-1 PHONE: 7359

DESCRIPTION OF MATERIAL:

Gas

ASSAY REQUESTED AT ☐ DT ☐	AT CODE NO.	
ANALYSIS REQUESTED	REPORTED ANSWERS	
GRAM U /GRAM		
Tritium M.C. PER/LB	3213.2	

SIGNED:

BY:

DEC 14 1960
DATE

1961 - 1962

	956610
BATCH NUMBER	REQUISITION NUMBER

REPORT TO: R. P. Brotherton

BUILDING NO. 9204-2 PHONE: 7359

DESCRIPTION OF MATERIAL: Gas

ASSAY REQUESTED AT ☐ DT ☐	AT CODE NO.
ANALYSIS REQUESTED	REPORTED ANSWERS
GRAM U /GRAM	
~~ASSAY~~	
~~% U~~	
~~Sp Gr~~	
Sample For Tritium.	
MC PER LBS	3183 Mc/lb

SIGNED:

BY: JAN 18 1961 DATE

Brotherton	956611
BATCH NUMBER	REQUISITION NUMBER

REPORT TO: Brotherton

BUILDING NO. 9805-1 PHONE: 7359

DESCRIPTION OF MATERIAL: Gas

ASSAY REQUESTED AT ☐ DT ☐	AT CODE NO.
ANALYSIS REQUESTED	REPORTED ANSWERS
GRAM U /GRAM	
M.C per/lb.	Not Insufficient material

SIGNED:

BY: DATE

TRITIUM Sample	956612
BATCH NUMBER	REQUISITION NUMBER

REPORT TO: R. P. Brotherton

BUILDING NO. 9204-2 PHONE: 7359

DESCRIPTION OF MATERIAL: Gas

ASSAY REQUESTED AT ☐ DT ☐	AT CODE NO.
ANALYSIS REQUESTED	REPORTED ANSWERS
GRAM U /GRAM	
~~Tritium~~	
Tritium	2,458 Mc/lb

SIGNED:

BY: SEP 11 1961 DATE

	956613
BATCH NUMBER	REQUISITION NUMBER

REPORT TO: R.P. BROTHERTON

BUILDING NO. 9204-2 PHONE: 7359

DESCRIPTION OF MATERIAL: GAS

ASSAY REQUESTED AT ☐ DT ☐	AT CODE NO.
ANALYSIS REQUESTED	REPORTED ANSWERS
GRAM U /GRAM	
MC/LB.	
2442 Mc/lb. tritium	

SIGNED:

BY: SEP 2 0 1961 DATE

TRITIUM	956615
BATCH NUMBER	REQUISITION NUMBER

REPORT TO: Brotherton

BUILDING NO. 7805-1 PHONE: 7359

DESCRIPTION OF MATERIAL:

GAS

ASSAY REQUESTED AT ☐ DT ☐	AT. CODE NO.
ANALYSIS REQUESTED	REPORTED ANSWERS
GRAM U /GRAM	
MC. per lb.	= 2442 Mc/lb

SIGNED:

BY: DATE NOV 10 1961

Tritium Sample	956616
BATCH NUMBER	REQUISITION NUMBER

REPORT TO: R. P. Brotherton

BUILDING NO. 9204-2 PHONE: 7359

DESCRIPTION OF MATERIAL:

Gas

ASSAY REQUESTED AT ☐ DT ☐	AT CODE NO.
ANALYSIS REQUESTED	REPORTED ANSWERS
GRAM U /GRAM	
MC per LBS	Insufficient Sample
Tritium	for Analysis
	2086

SIGNED:

BY: DATE

T	956618
BATCH NUMBER	REQUISITION NUMBER

REPORT TO: R. P. Brotherton

BUILDING NO. 9204-2 PHONE: 78484

DESCRIPTION OF MATERIAL:

Gas

ASSAY REQUESTED AT ☐ DT ☐	AT CODE NO.
ANALYSIS REQUESTED	REPORTED ANSWERS
GRAM U /GRAM	
% Tritium	
Mc/lb	1952 μc/lb.
	Tritium

SIGNED:

BY: DATE

Tritium	956619
BATCH NUMBER	REQUISITION NUMBER

REPORT TO: R. P. Brotherton

BUILDING NO. 9204-2 PHONE: 7359 ~~78484~~

DESCRIPTION OF MATERIAL:

GAS

ASSAY REQUESTED AT ☐ DT ☐	AT CODE NO.
ANALYSIS REQUESTED	REPORTED ANSWERS
GRAM U /GRAM	
% Tritium	= 2107.3 Mc/lb
Mc/lb	

SIGNED:

BY: DATE FEB - 2 1962

Tritium Sample — 956620

BATCH NUMBER | REQUISITION NUMBER

REPORT TO: R.P. Brotherton

BUILDING NO. 9204-2 PHONE: 7359

DESCRIPTION OF MATERIAL: gas

ASSAY REQUESTED AT ☐ DT ☐ | AT CODE NO.

ANALYSIS REQUESTED	REPORTED ANSWERS
~~GRAM U /GRAM~~	
mc/lb	2.4 mc/lb.

SIGNED:

BY: DATE MAR 26 1962

Tritium Sample — 956621

BATCH NUMBER | REQUISITION NUMBER

REPORT TO: R.P. Brotherton

BUILDING NO. 9204-2 PHONE: 7359

'62 MAR 8 AM 10:03

DESCRIPTION OF MATERIAL: Gas

ASSAY REQUESTED AT ☐ DT ☐ | AT CODE NO.

ANALYSIS REQUESTED	REPORTED ANSWERS
~~GRAM U /GRAM~~	
mc/lb.	2.5 mc/lb.

SIGNED:

BY: DATE MAR 26 1962

TRITIUM — 956622

BATCH NUMBER | REQUISITION NUMBER

REPORT TO: Brotherton

BUILDING NO. 9204-2 PHONE: 78484

62 MAR 14 PM 1:36

DESCRIPTION OF MATERIAL: gas

ASSAY REQUESTED AT ☐ DT ☐ | AT CODE NO.

ANALYSIS REQUESTED	REPORTED ANSWERS
GRAM U /GRAM	
MC/lb.	2.7 mc/lb.

SIGNED: MAR 26 1962

BY: DATE

Tritium — 956623

BATCH NUMBER | REQUISITION NUMBER

REPORT TO: Brotherton

BUILDING NO. 9805-1 PHONE: 7359

DESCRIPTION OF MATERIAL: gas

APR

ASSAY REQUESTED AT ☐ DT ☐ | AT CODE NO.

ANALYSIS REQUESTED	REPORTED ANSWERS
GRAM U /GRAM	
Mc per/lb	2,658 mc/lb

APR 1962

SIGNED:

BY: DATE

Tritium	956624
BATCH NUMBER	REQUISITION NUMBER

REPORT TO: R.P. Bratherton

BUILDING NO. 9204-2 PHONE: 7359

62 APR 18 AM 10:09

DESCRIPTION OF MATERIAL:

Gas

ASSAY REQUESTED AT ☐ DT ☐	AT CODE NO.
ANALYSIS REQUESTED	REPORTED ANSWERS
~~GRAM U /GRAM~~	
Mc/lb	3,322 μc/lb.

SIGNED:

BY: APR 30 1962 DATE

Batch # 2987	957625
BATCH NUMBER	REQUISITION NUMBER

REPORT TO: R.P. Bratherton

BUILDING NO. 9204-2 PHONE: 7-8485

DESCRIPTION OF MATERIAL:

Gas

ASSAY REQUESTED AT ☐ DT ☐	AT CODE NO.
ANALYSIS REQUESTED	REPORTED ANSWERS
GRAM U /GRAM	
Tritium	
mC/lb.	3.2

SIGNED:

BY: MAY 28 1962 DATE

Tritium	957626
BATCH NUMBER	REQUISITION NUMBER

REPORT TO: R. P. Brotherton

BUILDING NO. 9204-2 PHONE: 7359

MAY 10 AM 10:05

DESCRIPTION OF MATERIAL:

Gas

ASSAY REQUESTED AT ☐ DT ☐	AT CODE NO.
ANALYSIS REQUESTED	REPORTED ANSWERS
~~GRAM U /GRAM~~	
Mc/lb.	3.3
Tritium	

SIGNED:

BY: MAY 28 1962 DATE

Special Tritium	957627
BATCH NUMBER	REQUISITION NUMBER

REPORT TO: R. P. Bratherton

BUILDING NO. 9204-2 PHONE: 7359

DESCRIPTION OF MATERIAL:

ASSAY REQUESTED AT ☐ DT ☐	AT CODE NO.
ANALYSIS REQUESTED	REPORTED ANSWERS
GRAM U /GRAM	
Special Tritium	= 4,264 μc/lb

SIGNED:

BY: JUL 12 1962 DATE

3027	957629
BATCH NUMBER	REQUISITION NUMBER

REPORT TO: R. Brotherton 7-8338

BUILDING NO. 9204-2 PHONE:

DESCRIPTION OF MATERIAL:

Q46 GAS
40PSIG

ASSAY REQUESTED AT ☐ DT ☐ | AT CODE NO.

ANALYSIS REQUESTED	REPORTED ANSWERS
GRAM U /GRAM	
Mc per pound Tritium	5330 uc Td. / lb.

SIGNED: SEP 3 - 1962 DATE

BY:

	957630
BATCH NUMBER	REQUISITION NUMBER

REPORT TO: R. Brotherton

BUILDING NO. 9204-2 PHONE: 78484

DESCRIPTION OF MATERIAL:

gas 40PSIG

ASSAY REQUESTED AT ☐ DT ☐ | AT CODE NO.

ANALYSIS REQUESTED	REPORTED ANSWERS
GRAM U /GRAM	.43 x 1000 x 738.1/760 =
Mc per pound Tritium	5,724 uc/lb

OCT 23 1962

SIGNED:

BY: DATE

TRITIUM	957631
BATCH NUMBER	REQUISITION NUMBER

REPORT TO: R.P. BROTHERTON

BUILDING NO. 9204-2 PHONE: 78484

DESCRIPTION OF MATERIAL:

GAS

ASSAY REQUESTED AT ☐ DT ☐ | AT CODE NO.

ANALYSIS REQUESTED	REPORTED ANSWERS
GRAM U /GRAM	.44 x 1000 738.1/760 =
Mc PER POUND TRITIUM	5,859 uc/lb

SIGNED: OCT 23 1962

BY: DATE

TRITUM	957632
BATCH NUMBER	REQUISITION NUMBER

REPORT TO: R. BROTHERTON

BUILDING NO. 9204-2 PHONE: 7359

DESCRIPTION OF MATERIAL:

GAS

ASSAY REQUESTED AT ☐ DT ☐ | AT CODE NO.

ANALYSIS REQUESTED	REPORTED ANSWERS
GRAM U /GRAM	
Mc/lb. TRITUM	6,457 uc/lb

SIGNED:

BY: DATE

Tritium Sample	957633
BATCH NUMBER	REQUISITION NUMBER

REPORT TO: Brotherton

BUILDING NO. 9204-2 PHONE: 7-8484

DESCRIPTION OF MATERIAL:

gas

ASSAY REQUESTED AT ☐ DT ☐	AT CODE NO.
ANALYSIS REQUESTED	REPORTED ANSWERS
GRAM U /GRAM	
MC per	
Pound	7092 uc/LB.
Tritium	

SIGNED:

BY:

DEC 27 1962

DATE

1963-1964

BATCH NUMBER	REQUISITION NUMBER
—	957634

REPORT TO: R.P. BROTHERTON

BUILDING NO. 9204-2 PHONE: 7-8485

DESCRIPTION OF MATERIAL: 1:39

GAS

ASSAY REQUESTED AT ☐ DT ☐	AT CODE NO.
ANALYSIS REQUESTED	REPORTED ANSWERS
GRAM U /GRAM	
H^3	6338 MC/lb

SIGNED: APR 23 1963

BY: DATE

BATCH NUMBER	REQUISITION NUMBER
Outing Sample	957635

REPORT TO: Brotherton

BUILDING NO. 9204-2 PHONE: 7-8484

DESCRIPTION OF MATERIAL:

gas

ASSAY REQUESTED AT ☐ DT ☐	AT CODE NO.
ANALYSIS REQUESTED	REPORTED ANSWERS
GRAM U /GRAM	6.3
MC/per pound Tritium	

SIGNED: JUL 2 - 1963

BY: DATE

BATCH NUMBER	REQUISITION NUMBER
Tritium Sample	957636

REPORT TO: R. P. Brotherton

BUILDING NO. 9204-2 PHONE: 7359

DESCRIPTION OF MATERIAL:

Gas

ASSAY REQUESTED AT ☐ DT ☐	AT CODE NO.
ANALYSIS REQUESTED	REPORTED ANSWERS
GRAM U /GRAM	
MC/LB	
Tritium	
5347 MC/LB tritium	

SIGNED:

BY: DATE

BATCH NUMBER	REQUISITION NUMBER
—	957637

REPORT TO: R. Brotherton

BUILDING NO. 9204-2 PHONE: 7359

DESCRIPTION OF MATERIAL:

Gas 040

ASSAY REQUESTED AT ☐ DT ☐	AT CODE NO.
ANALYSIS REQUESTED	REPORTED ANSWERS
GRAM U /GRAM	
	4696.23 Mc/lb
MC per	
pound	
Tritium	

SIGNED: JAN 2 - 1964

BY: DATE

Tritium	957638
BATCH NUMBER	REQUISITION NUMBER

REPORT TO: R.P. Brotherton

BUILDING NO. 9204-2 PHONE: 7359

DESCRIPTION OF MATERIAL: GAS

ASSAY REQUESTED AT ☐ DT ☐	AT CODE NO.
ANALYSIS REQUESTED	REPORTED ANSWERS
GRAM U /GRAM	
MC Per Pound Tritium	4260.8 μc/lb

SIGNED:

BY: DATE

gas	957639
BATCH NUMBER	REQUISITION NUMBER

REPORT TO: Brotherton

BUILDING NO. B-2 PHONE: 7844

DESCRIPTION OF MATERIAL: gas

ASSAY REQUESTED AT ☐ DT ☐	AT CODE NO.
ANALYSIS REQUESTED	REPORTED ANSWERS
GRAM U /GRAM	
MC per lb Tritium	3286.9 μc/lb

SIGNED:

BY: DATE

	957640
[illegible]	REQUISITION NUMBER

[illegible].G. TAYLOR

[illegible]9204-2 PHONE: 7359

[illegible]N OF MATERIAL: GAS

ASSAY REQUESTED AT ☐ DT ☐	AT CODE NO.
ANALYSIS REQUESTED	REPORTED ANSWERS
GRAM U /GRAM	
MC Per-Pound Tritium	2513 μc/lb

SIGNED:

BY: DATE

Tritium	957641
BATCH NUMBER	REQUISITION NUMBER

REPORT TO: H.G. TAYLOR

BUILDING NO. 9204-2 PHONE: 7359

DESCRIPTION OF MATERIAL: GAS

ASSAY REQUESTED AT ☐ DT ☐	AT CODE NO.
ANALYSIS REQUESTED	REPORTED ANSWERS
GRAM U /GRAM	
MC Per/lb Tritium	1964 μc/lb

SIGNED:

BY: DATE

TR. UNIT	957642
BA . NUMBER	REQUISITION NUMBER

REPORT TO: TAYLOR

BUILDING NO. 9204-2 PHONE: 78484

DESCRIPTION OF MATERIAL:

Mc Per Pound Tritium

ASSAY REQUESTED AT ☐ DT ☐ | AT CODE NO.

ANALYSIS REQUESTED	REPORTED ANSWERS
GRAM U /GRAM	
H^3 =	3970 μc/lb

SIGNED:

BY: DATE

—	957643
BATCH NUMBER	REQUISITION NUMBER

REPORT TO: R.P. BROTHERTON

BUILDING NO. 9204-2 PHONE: 7-8484

DESCRIPTION OF MATERIAL:

GAS

ASSAY REQUESTED AT ☐ DT ☐ | AT CODE NO.

ANALYSIS REQUESTED	REPORTED ANSWERS
GRAM U /GRAM	
	3590 Mc/lb

SIGNED: AUG 5 1964

BY: DATE

—	957644
BATCH NUMBER	REQUISITION NUMBER

REPORT TO: R.P. BROTHERTON

BUILDING NO. 9204-2 PHONE: 7359

DESCRIPTION OF MATERIAL:

GAS

ASSAY REQUESTED AT ☐ DT ☐ | AT CODE NO.

ANALYSIS REQUESTED	REPORTED ANSWERS
GRAM U /GRAM	
3.5	Millicuries/lb

SIGNED: SEP 30 1964

BY: DATE

Tritium	957645
BATCH NUMBER	REQUISITION NUMBER

REPORT TO: R.P. Brotherton

BUILDING NO. 9204-2 PHONE: 78484

DESCRIPTION OF MATERIAL:

Gas

ASSAY REQUESTED AT ☐ DT ☐ | AT CODE NO.

ANALYSIS REQUESTED	REPORTED ANSWERS
GRAM U /GRAM	
Tritium	2.922 micro curies per lb
~~mc/lb~~	

SIGNED:

BY: DATE

1965 - 1966

TRITIUM	957646
BATCH NUMBER	REQUISITION NUMBER

REPORT TO: HG TAYLOR

BUILDING NO. 9204-2 PHONE: 3-7359

DESCRIPTION OF MATERIAL:

GAS

ASSAY REQUESTED AT ☐ DT ☐	AT CODE NO.
ANALYSIS REQUESTED	REPORTED ANSWERS
GRAM U /GRAM	
MC/lb	2707 micro curries per lb

SIGNED:

BY: DATE JAN 8 1965

Tritium	957647
BATCH NUMBER	REQUISITION NUMBER

REPORT TO: H. G Taylor

BUILDING NO 9204 PHONE 3-5489

DESCRIPTION OF MATERIAL:

gas

ASSAY REQUESTED AT ☐ DT ☐	AT CODE NO.
ANALYSIS REQUESTED	REPORTED ANSWERS
GRAM U /GRAM	
3132	Micro Curies Per lb

SIGNED:

BY: DATE FEB 11 1965

	957648
BATCH NUMBER	REQUISITION NUMBER

REPORT TO: R. P. Brotherton

BUILDING NO. 9204-2 PHONE 35484

DESCRIPTION OF MATERIAL:

gas

ASSAY REQUESTED AT ☐ DT ☐	AT CODE NO.
ANALYSIS REQUESTED	REPORTED ANSWERS
GRAM U /GRAM	
	3850 micro curies per lb

DATE

REQUISITION 922540

BATCH NO. INSERT

gas

3775 micro curies per lb tritium

WORK REQUEST NO. 000

COORDINATOR

REPORT TO Brotherton

BUILDING NO. 9805-1

PHONE NO. 3-7359

REQUISITION 922665

BATCH NO.

INSERT

For tritium

Health Physics

WORK REQUEST NO.

COORDINATOR

REPORT TO

BUILDING NO.

PHONE NO.

REQUISITION

CHECK DESIRED ANALYSIS

g U/g

g Li/g

g D/g

g H/g

g Mo/g

g F/g

SPEC.

ASSAY

C

Sp. G.

4/4/71 Miss Cunning (for tritium)

RESULTS REPORTED ON SAMPLE AS RECEIVED BASIS UNLESS OTHERWISE NOTED.

REPT. BY	[illegible]
DATE	9-28-66
METHOD OF ANAL.	

1967-1968

REQUISITION 920249

BATCH NO.

INSERT

Gas

11-17-68
1230

WORK REQUEST NO.

COORDINATOR

REPORT TO
R. P. Brotherton

BUILDING NO.
9805-1

PHONE NO.
3-7359

REQUISITION	CHECK DESIRED ANALYSIS
	g U/g
	g Li/g
	g D/g
	g H/g
	g Mo/g
	g F/g
	SPEC.
3256 MKL	ASSAY
Bitterw	C
	Sp. G.

RESULTS REPORTED ON SAMPLE AS RECEIVED BASIS UNLESS OTHERWISE NOTED.

REPT. BY	Nee
DATE	12-3-68
METHOD OF ANAL.	

REQUISITION 922787

BATCH NO.

INSERT

AM 11:51

WORK REQUEST NO.

COORDINATOR

REPORT TO
R. P. Brotherton

BUILDING NO.
9204-2

PHONE NO.
35484

REQUISITION	CHECK DESIRED ANALYSIS
	g U/g
	g Li/g
	g D/g
	g H/g
	g Mo/g
	g F/g
	SPEC.
	ASSAY
	C
	Sp. G.

4512 Micro ferrin

Per lb.

RESULTS REPORTED ON SAMPLE AS RECEIVED BASIS UNLESS OTHERWISE NOTED.

REPT. BY	
DATE	JAN 18 1967
METHOD OF ANAL.	

UCN-7721B
(2 1-86)

OAK RIDGE Y-12 PLANT INFORMATION CONTROL FORM

8/28 ChemRisk

DOCUMENT DESCRIPTION (Completed By Requesting Division)

Document No	Author's Telephone No.	Acct. No	Date of Request
Y/TS-1566	6-0263	2366000 3	08/27/96

Unclassified Title: TRITIUM (FROM L. HEADRICK, 9204-2)

Author(s) Requestor: Steve Wiley

TYPE: ☐ Formal Report ☐ Informal Report ☐ Progress/Status Report ☐ Co-Op Report ☐ Thesis/Term Paper

☐ Oral Presentation (identify meeting, sponsor, location, date):

☐ Journal Article (Identify Journal):

☒ Other (Specify): To Be Released to ChemRisk, Phase II

Document will be published in proceedings ☑ No ☐ Yes

Document will be distributed at meeting ☑ No ☐ Yes

Document has patent or invention significance ☑ No ☐ Yes (Identify)

Document has been previously released ☑ No ☐ Yes (Reference)

170 pp

DIVISION REVIEW AND APPROVAL (Completed By Requesting Division)

TECHNICAL CLASSIFICATION REVIEW (Divisional Classification Representative)

Title(s): U Abstract: NA

DOCUMENT: Level U Category –

Signature 8/28/96 Date

DOCUMENT REQUEST APPROVED (Division or Department)

Signature 8/27/96 Date

Signature Date

THE REMAINDER OF THIS FORM TO BE COMPLETED BY THE TECHNICAL INFORMATION OFFICE

DISTRIBUTION

☐ Internal Distribution

☐ External Distribution

TID-4500 Category _____ or _____ Copies to OSTI

ANNOUNCED IN ERA Atomindex (Available from NTIS)

M-3679 Category

ANNOUNCE IN: ☐ AWDR (Available from OSTI) ☐ ANCR

Distribution:	UCN-7721B	DOE F-1332.15	Document
Y-12 Central Files	Y-12 RC	Y-12 RC	Y-12 RC
TIO File	L.L. McCauley		
	S.W. Wiley		
	R.M. Keyser		

Distribution Remarks: Unlimited (ChemRisk)

APPROVAL AND RELEASE

Date Received | Date Initiated 8/27/96

☒ CLASSIFICATIONS:

Title(s): U Abstract –

DOCUMENT:

Level U Category –

Weapons Date – Sigma –

Y-12 Classification Office 8/28/96 Date

☐ Editor Date

☒ Patent Office 27 Aug 96 Date

☐ Date

☐ Date

APPROVED FOR: ☐ Declassification ☐ Release subject to use of the following admonitory markings and conditions:

☐ Disclaimer ☐ Copyright ☐ Patent Caution ☐ Other

KWIC

Technical Information Office 28 Aug 96 Date

Conditions/Remarks:

I N T E R O F F I C E M E M O R A N D U M

Date: 19-Jan-1995 02:59pm EST
From: Johnny M Skinner
SKINNERJM
Dept: 2366
Tel No: 6-6013

TO: See Below

Subject: Changes to Air Emission Sources

Gentlemen,

The Clean Air Program (CAP) staff is updating the air permit database/files for the new **Title V** permitting. As a result of our evaluation of the database/files, the following changes were made to the database and/or permit files. Would you please make the necessary changes (write with pen) on your copies for the changes given in "bold" below:

Previous Source Number	New Source Number	Responsible Person(s)	Description
-9201-1-EX-C(0)	**Y-9201-1-EX-C(00)**	V. Brown/T. Howell	Two Ultrasonic Cleaning Tanks
Y-9201-1-EX-G(0)	**Y-9201-1-EX-M(00)**	V. Brown/T. Howell	**Cleaning Tank**
Y-9201-1-EX-D(0)	**Y-9201-1-EX-N(00)**	V. Brown/T. Howell	Welding Operations
Y-9217-1-EX-[A]-(216,217)	Y-9217-1-EX-A(216,217)	V. Brown/T. Howell	**Graphite Shop Storage Ventilation**
Y-9217-1-EX-[A]-(218,219)	Y-9217-1-EX-A(218,219)	V. Brown/T. Howell	**Graphite Shop Storage Ventilation**
Y-9201-5-FAB-EX-[A]-(1)	**Y-9201-5-EX-J(779)**	C. Guider/Wimp Shoopman	Welding Hood 86
Y-9805-1-EX-(399)	**Y-9805-1-EX-A(399)**	B. Davis/Rick Davis	Deuterium Operation

MARTIN MARIETTA

Internal Correspondence

MARTIN MARIETTA ENERGY SYSTEMS, INC.

August 6, 1992

R. B. Bonner

Exemption from Air Pollution Permitting Requirement: Lithium Deuterium Operation Located in Building 9805-1 at the Y-12 Plant

The Y-12 Health, Safety, Environment, and Accountability Division Clean Air Program (HSEA-CAP) staff has received and reviewed your request for a Tennessee Air Pollution Control Board permit for the deuterium operation in Building 9805-1. Our evaluation of the information presented to the Y-12 CAP staff indicates that a permit will not be required for the deuterium operation [Source Y-9805-1-EX-A(399)] located in Building 9805-1 at the Y-12 Plant.

Based on the data given, the air emissions from this building will consist only of air, water vapor, or components of air (nitrogen, oxygen, carbon dioxide, argon, helium, hydrogen, etc). These emissions are not considered air pollutants requiring permitting based on guidance from the Tennessee Department of Environment and Conservation (TDEC). Therefore, no air permit will be required.

The Tennessee Air Pollution Control Regulations (TAPCR) provides owners and operators desiring to construct or operate certain air contaminant sources an exemption from applying for and obtaining state permits. However, based on our calculation of radionuclides (tritium) from the deuterium operation in Building 9805-1, the emission rate for radionuclides was calculated to be much less than 0.1 millirem per year (mrem/yr) for Source Y-9805-1-EX-(399), which means that this source is exempted from air permitting requirements. The TDEC issued an agreement letter to the DOE dated May 17, 1991, to address small sources emitting only trace quantities of radionuclides. The letter states:

> "The exemptions under 1200-3-9-.04 of the Tennessee Division of Air Pollution Control Regulations will apply to equipment exhausting radioactive air contaminants if the emissions from this equipment generate an effective body dose less than 0.1 millirem per year (mrem/yr) at the property line of the facility."

This applies to Source Y-9805-1-EX-A(399). However, notwithstanding the exemption stated above, no person shall discharge from any source whatsoever, such quantities of air contaminants or other materials which cause (or have a tendency to cause) injury, detriment, annoyance, or adverse effects to the public.

This letter of exemption from the TAPCR permitting requirements granted by the Y-12 HSEA-CAP staff is based specifically upon the information submitted for review. Changes in this information or the source's mode of operation, i.e., the material inputs, control equipment, or emission rates, may invalidate the permitting exemption granted to this source. The HSEA-CAP staff must be notified before such changes are made to the source to determine the permit requirements.

A copy of the Data Verification Statement for Exempt Air Sources and source description have been enclosed. A copy of the data and supporting calculations for the deuterium operation used in Building 9805-1 is classified and is on file at the HSEA-CAP air permit files. This data may be reviewed by Q-cleared personnel.

If you have any questions or desire additional information, please contact the undersigned at your convenience.

J. M. Skinner

J. M. Skinner, 9116, MS-8098, Y-12 (6-6013)

JMS:rft

Enclosure: As Stated

cc\enc: B. G. Davis
C. D. Davis
R. H. Richesin
J. M. Skinner

cc: H. L. Fellers/I. D. Shelton
C. C. Hill
R. M. Keyser/J. E. Stone
W. A. Muenzer
D. A. Poole
P. R. Wasilko
File - EMD -RC

Y-12 PLANT EXEMPT AIR
SOURCE DATA VERIFICATION STATEMENT

Exempt Air Source Data Verification for Y-9805-1-EX-(399)
at the Y-12 Plant

Attached to this Data Verification Statement is a copy of the Y-9805-1-EX-(399) source description and data for the deuterium operation located in Building 9805-1 at the Y-12 Plant. This air emission source has been exempted from air permitting requirements under TDEC De minimis Level Agreement, Proposal 2.

Since you are responsible for ensuring that the air emission source operates in accordance with the information provided for the deuterium operation, please review the source description and data carefully. If the information is accurate, please sign the Data Verification Statement below and return it along with all enclosures.

Your exemption cannot be processed until the Data Verification Statement is sign and received by HSEA-CAP. If you disagree with any of the information in the enclosed source description or the classified data on file, please contact J. M. Skinner, 9116, MS-8098 (6-6013).

An emission of small quantities of radionuclides in a year from the deuterium operation will not invalidate this exemption.

The deuterium operation must not result in visible smoke being emitted from the building in excess of the standards in TDEC Rule 1200-3-5 (20% opacity for greater than 6 minutes per hour or 24 minutes per day). Please contact the HSEA-CAP if any visible smoke is seen coming from a hood exhaust or building vent. It is the responsibility of the CAP to determine the compliance of visible emission from the source and it is not the responsibility of the individual who signs this form.

DATA VERIFICATION STATEMENT

I have reviewed all the information in the attached exempt air source description and to the best of my knowledge, the information is accurate.

Robert Bonner — 7/27/92

Signature — Date

ROBERT BONNER

Name

LITHIUM PROCESSING DEPARTMENT HEAD

Title

9204-2 — 8132 — 4-2080

Building — Mail Stop — Phone #

Source Description and Data for Y-12 Plant Exempt
Air Source Y-9805-1-EX-(399)

Building 9805-1 is used to produce deuterium gas by the electrolysis of heavy water (D_2O). A very small amount of tritium is present in the D_2O which is received from the Savannah River Operations (SRO). The electrolysis takes place in specially designed electrolytic cells which contain a 15 percent solution of Sodium Oxydeuteride (NaOD). The heavy water is separated by diaphragms and gas bells which prevent mixing of the two gas streams. The deuterium product gas is then processed to remove unwanted oxygen and moisture and then compressed and stored for future use.

The oxygen waste gas stream is processed extensively before it is vented to the atmosphere to prevent valuable heavy water or deuterium gas from escaping the system. Oxygen is vented from the electrolytic cells through a waste gas cooler to remove heavy water from the waste gas stream as condensate. The oxygen is then passed through a mist separator to remove liquid carryover from the waste gas stream as it leaves the waste gas cooler. The oxygen stream is then routed through a recombiner where residual deuterium gas reacts with oxygen to produce deuterium free oxygen and a small amount of heavy water. Finally, the oxygen stream passes through a freon chiller, where any remaining heavy water is condensed out of the waste gas stream before the gas is discharged to the atmosphere above the roof.

The exemption is based on the fact that the emission rates from the deuterium operation used by lithium personnel located in Building 9805-1 generate an effective body dose of radionuclides (tritium) less than 0.1 millirem per year (mrem/yr). The calculations are based on the 1988 (peak year) Shipment of D_2O from the SRO. The calculations are classified and on file at the Y-12 Plant Clean Air Program air permit files which may be reviewed by Q-cleared personnel.

I N T E R O F F I C E M E M O R A N D U M

Date: 20-Jul-1992 08:35am EDT
From: Johnny M Skinner
SKINNERJM
Dept: 2366
Tel No: 6-6013

TO: Raymond K Barnett (BARNETTRK)

CC: Charles D Davis (DAVISCD)
CC: William A Muenzer (MUENZERWA)

Subject: Building 9805-1 Information

Ken, please send me a description of Building 9805-1, by email or letter, describing what the building is used for (if not classified) and what being emitted to atmosphere (please send info ASAP). Based on the information received, I will send you an official letter of exemption from air permitting requirements (the Clean Air Program staff already know that the source is exempt). If you have any questions please call me at 6-6013.

Thanks,

Johnny Skinner

I N T E R O F F I C E M E M O R A N D U M

Date: 20-Jul-1992 10:13a
From: Johnny M Skinner
SKINNERJM
Dept: 2366
Tel No: 6-6013

TO: Wasilko, Paul R (WASILKOPR AT A1 AT OCU)

CC: Charles D Davis (DAVISCD)
CC: William A Muenzer (MUENZERWA)
CC: Shelton, Iris Darling (SHELTONID AT A1 AT OCU)

Subject: Building 9805-1 Information

Exemption from Air Pollution Permitting Requirement:
Building 9805-1 located at the Y-12 Plant

This message is in response to your question concerning whether Building 9805-1 requires an air permit. The Clean Air Program staff evaluation of the information received from your division earlier this year indicates that a permit is not required for the operation in Building 9805-1, since the air emissions from this building will consist only of air, water vapor or components of air (nitrogen, oxygen, carbon dioxide, argon, helium, hydrogen, etc). These emissions are not considered air pollutants requiring permitting based on guidance from the Tennessee Department of Environment and Conservation (TDEC). Therefore, no air permit will be required.

However, based on our calculation of radionuclides from the operation in this building, the emission rate for radionuclides was calculated to be less than 0.1 mrem/yr for this source, which mean that this source is exempted from air permitting requirements. The TDEC issued an agreement letter to the Department of Energy dated May 17, 1991, to address small sources emitting only trace quantities of radionuclides. The letter states:

> "The exemptions under 1200-3-9-.04 of the Tennessee Division of Air Pollution Control Regulations will apply to equipment exhausting radioactive air contaminants if the emissions from this equipment generate an effective body dose less than 0.1 millirem per year (mrem/yr) at the property line of the facility."

This applies to Building 9805-1 operation. However, notwithstanding the exemption stated above, no person shall discharge from any source whatsoever, such quantities of air contaminants or other materials which cause (or have a tendency to cause) injury, detriment, annoyance, or adverse effects to the public.

If you have any questions please call me at 6-6013.

Johnny Skinner

I N T E R O F F I C E M E M O R A N D U M

Date: 21-Jul-1992 02:45pm EDT
From: R Michael Richesin
RICHESINRM
Dept: 2618
Tel No: 576-2529

TO: William A Muenzer (MUENZERWA)
TO: R Michael Richesin (RICHESINRM)

CC: Benjamin G Davis (DAVISBG)

Subject: Heavy Water Spills

I was requested to determine if there was any evidence or knowledge of heavy water spills inside the Y-12 Plant. A search of Quality Event Reports (QERs), Quality Incident Reports (QIRs), Unusual Occurrence Reports (UORs), and Occurrence Reports (ORs) indicates no record of spills of heavy water. R. K. Barnett, who has worked in the lithium processing areas for the past 37 years, also has no recollection of any such spills. Please note there was a spill of half heavy water in a truck in October of 1991. This incident was reported in Occurrence Report # MMES-91-4340 Y12-91-1819.

Mike Richesin

BLOCK FLOW DIAGRAM OF THE D_2 GAS PRODUCTION PROCESS

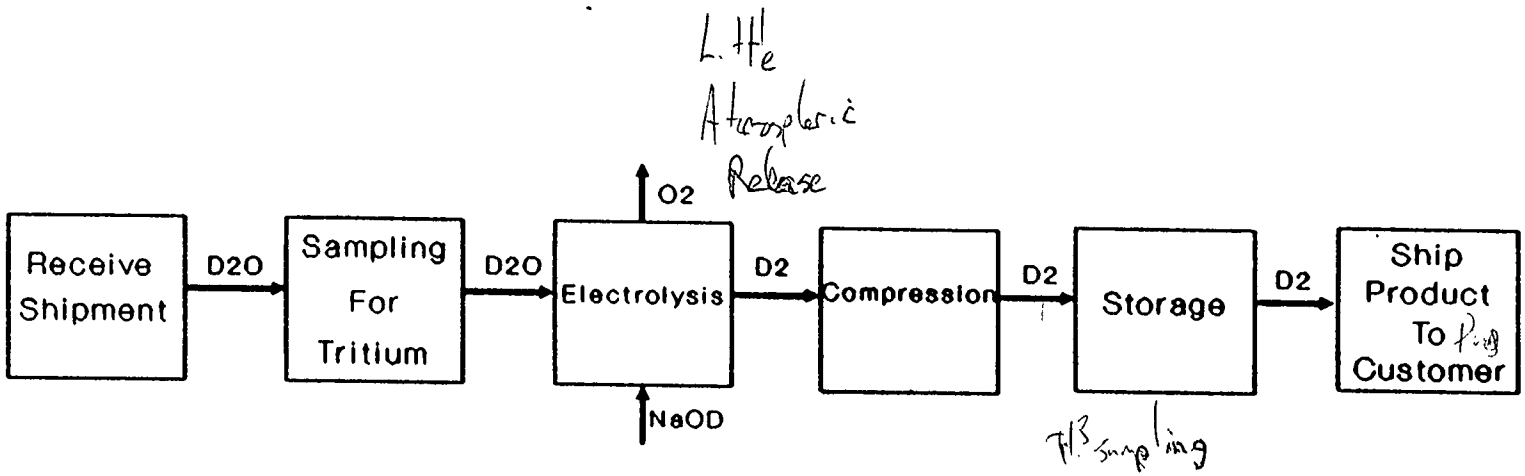

RMR:7-15-92

BLOCK FLOW DIAGRAM OF THE LITHIUM DEUTERIDE DISSOLUTION PROCESS

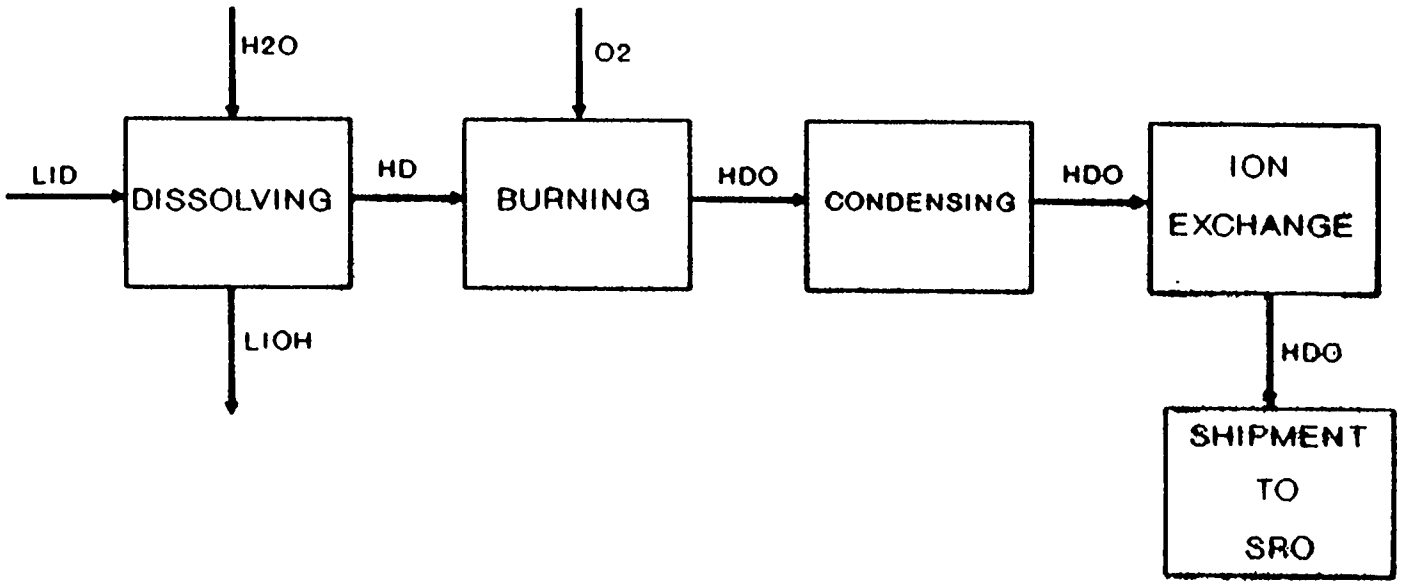

RMR:7-16-92

JOB INSTRUCTIONS

NOTE: All heavy water shipments received at the Y-12 Deuterium Gas Facility will be sampled for tritium upon arrival at Building 9805-1. Composite samples, consisting of 10 drums each, will be utilized to sample every drum received.

1. Fill out Sample Bottle Form, UCN-3248, for sample and place on 500 mL glass bottle.

2. Label sample bottle with a Hazard Diamond label with a rating of 1,0,0.

3. Flush a syringe with heavy water three to four times before each sample is taken.

4. Obtain the sample by taking 40 to 50 mL of heavy water from one of the ten 55-gallon drums of D_2O.

5. Place sample in sample bottle.

6. For each of the nine remaining drums, repeat steps 3 through 5 and place the samples in the same bottle used in step 1.

7. For each of the remaining drums, repeat steps 1 through 6 until the entire shipment has been sampled.

8. Fill out a Request for Analysis Form, UCN-3325, for each composite sample asking for:

   a. microcuries/L tritium
   b. atom % D
   c. g D/g
   d. g D_2O/g

9. Record in the Heavy Water Requisition Logbook in the Team Leader's office:

   a. Date
   b. Requisition number
   c. Batch numbers of the ten 55-gallon drums sampled
   d. Analysis requested
   e. Team Member's initials

10. Place the sample, the request for analysis form, and the DYMCAS document in the Team Leader's office.

11. Store the 55-gallon drums of heavy water until the analysis is returned from the Plant Laboratory.

12. When the analysis is returned from the Plant Laboratory, check the results of the samples to ensure they contain no more than 400 microcuries/L and the atom % D is at least 99.6%.

13. If the heavy water contains less than 400 microcuries/L tritium and more than 99.6 atom % D, then the heavy water is suitable for use in the deuterium gas production process.

14. If the heavy water contains more than 400 microcuries/L and/or less than 99.6 atom % D, then the water should not be used until the results can be evaluated by the Process Engineer and Cell Director.

Robert Bowen
Approval

7/7/92
Date

TRITIUM ISSUES

SAMPLING TECHNIQUE: Composite vs. Individual

- **Composite sampling is cost effective.**
  - **Lower lab cost**
  - **Lower labor cost**
  - **Conserves valuable D_2O**
- **Individual sampling provides exact chemical composition of every drum.**

RMR:7-15-92

Lithium Operations composite samples for tritium of the 1989 D_2O shipment compare favorably with an average of Savannah River's tritium samples for the same ten drums.

SRO's Average of ten drums	LOD's Composite of ten drums
32.1 μC/L	18.7 μC/L
88 μC/L	63.4 μC/L
26.2 μC/L	15.3 μC/L
73.2 μC/L	57.7 μC/L

- **Results indicate SRO's tritium analysis provides accurate and reliable results.**
- **Composite samples results are representative of actual tritium levels.**
- **Composite sampling provides an efficient, cost effective means to screen incoming D_2O shipments for high tritium levels.**

RMR:7-15-92

Tritium Limits: **The current tritium limit is based on SRO's maximum limit of 400 μC/L.**

- **Lithium Operations is seeking a meaningful tritium limit.**
  - **Based on the current tritium limit, employees must inhale or ingest 53.5 gallons of D_2O at the maximum tritium limit to exceed the annual exposure limit of 81,000 μC/L.**
  - **The ratio of the maximum tritium limit to the amount an employee must inhale or ingest to exceed the annual exposure limit is inversely proportional.**
  - **Needed in the event tritiated water above the 400 μC/L limit is delivered to the Deuterium Gas Facility.**

1988 Shipment from SRO

81 drums @ ≈55 gallons each

total of 18,320.9 Kgs. of D_2O

avg. tritium content: 98.7531 μCi/L
lower level: 4 μCi/L
upper level: 400 μCi/L

1989 Shipment from SRO

40 drums @ ≈ 55 gallons each

total of 9,028.2 Kg's of D_2O
avg. tritium content 54.875 μCi/L
lower level: 3 μCi/L
upper level: 420 μCi/L

* based on analysis performed by Savannah River Company

R. M. Richesin
5-12-92

for Johnny Skinner 6-6013

½ ml

Al Parker

~~4-2457~~ → 4-2958

4-2422

Ray Hinton

tritium
$100/hr. .54 hrs/sample

81,000 μCi annually ⇒ from ICRP (International Commission on Radiological Protection)

heavy water min: 0.003 μCi/mL ⇒ 3 μCi/L

max: 0.4 μCi/mL ⇒ 400 μCi/L

@ max level: $\frac{81{,}000\ \mu Ci/yr.}{400\ \mu Ci/L} = 202.5\ L/yr.$ (intake required to achieve max allowable dosage)

⇓

53.5 gal/yr.

3.785 L/gal.

5) Consolidation of D_2O storage facilities in one central location should be considered. If the HWPF is constructed at SRS, this would be the preferred centralized D_2O storage location.

6) Offices and shops in 400-Area should continue to be used after all operating facilities are shutdown.

Small costs and risks are associated with continued operation of 400 Area D_2O facilities. The dependability of DOE's heavy water supply would be significantly reduced if the facilities were prematurely shutdown before the degraded D_2O processing is completed and/or replacement facilities are available.

DISCUSSION

SRS D_2O Facilities and 400-Area Status

The purpose of the SRS D_2O operations is to purify and upgrade heavy water as necessary to meet the D_2O requirements of the Reactor program and other DOE complex sites. Also, the D_2O inventory is managed and D_2O receipts/shipments are handled. Figure 1 is a flow diagram of the SRS D_2O operations. 400-Area facilities upgrade D_2O from both onsite and offsite sources. D_2O is recycled to and from 400-Area for purification upgrading and replacement. Some D_2O is also received from non-DOE sources. The SRS Reactor facilities also contain operations to maintain the purity and concentration of D_2O. The overall operations must be integrated to provide the most effective D_2O processing. A brief description and operational status of the primary SRS D_2O facilities follows.

D_2O Storage / Handling

The 400-Area is the primary D_2O storage / management location for the DOE complex. The current inventory of D_2O at SRS is shown in Table 4. About 1625 metric tons (MT) of D_2O are located at SRS. Heavy water at SRS is maintained in three categories according to the tritium content.

Heavy water that has been used as a reactor moderator contains higher tritium content. At SRS D_2O with tritium greater than 30 µCi/ml is considered high tritium. However, the SRS reactor moderator tritium content is significantly higher (3 to 11 Ci/L). The current inventory of high tritium D_2O available at SRS for reactor use is 1460 MT. This includes all D_2O in the Purification-Rework system plus that in the reactors. A significant amount of the current D_2O inventory (≈200 MT in 2300 drums) is awaiting purification in 100 Areas (HAM, MPF) before it will be processed through Rework Unit.

The SRS inventory contains 124 MT of low tritium moderator (<50 pci/ml) that was produced before atmospheric testing of atomic weapons. Heavy water with this low tritium content could not be produced today, so this material has always been reserved for experimental activities.

225

Moderate tritium activity D_2O has a tritium content between 51 pCi/ml to 30 µCi/ml. This D_2O is primarily used at Y-12 in Oak Ridge to produce deuterium gas for the weapons program. Dilute D_2O (about 50 mol%) is returned to SRS from Oak Ridge for reconcentration in DW Plant.

Except for the D_2O in the reactor systems, the heavy water is stored in about 5600 drums (55 gallon) in seven storage buildings located in four separate areas including 400-D. The available drummed storage capacity is now strained and additional space and drums are not available for drumming the moderator in the reactors. The proposed HWPF does not provide a centralized D_2O storage / handling facility capable of replacing the operations now provided from the 400-Area. A drum washing facility is also operating in the 400-Area and is required to allow the reuse of drums.

D_2O Analytical Facilities

The Analytical Laboratories Water Quality Lab, located in 772-D supports the 400-D Area heavy water processing facilities analyses, all reactor areas (100 Areas) analyses, and routine analyses required by EPA and other regulatory agencies for drinking water and wastewater. Approximately 95% of the samples handled by the 772-D laboratory are reactor moderator samples which contain high concentrations of tritium.

There are physical problems associated with the 772-D facility which has been in operation for about 40 years. The facility is operating at a maximum throughput, and is limited by air flow from further expansion. During the past 18 months, there have been three major outages of the facility due to electrical and stack monitoring problems. Upgrades have been made to minimize such outages. The present facility can be kept operational without major capital expense for only the next 3-5 years. Subsequent operation after that time will require either a new facility or major expansion and upgrading of the present facility.

Present plans are to relocate the 100-Area D_2O analytical work to 772-F when renovations are complete (estimated in 3 years). The 772-D lab will retain existing equipment and provide analytical support for 400 Area Facilities that are still operational. The HWPF facility will include a laboratory capable of supporting the HWPF operation and NPR. It was not thought that the HWPF laboratory could provide both the NPR/HWPF and 100-Area laboratory needs. However, during the period from HWPF startup to when the NPR is operational, the new lab should have the required capacity for the 100-Areas. If the 100-Area Reactors continue to operate after NPR startup, two labs will probably be required.

Rework Unit

The Rework Unit is a vacuum distillation process used to upgrade moderator that has been in reactor service and therefore has a high tritium content. Originally, this equipment was part of the finishing facility, including DW Plant, that was used to provide the final concentration step for virgin D_2O produced in the 400-Area GS-Process which was shutdown in 1982. The Rework Unit was separated from DW-Plant to become an independent operation. The facility is still operational after 39 years of service but must

often be shutdown during warm weather (the shutdown facility could freeze in cold weather) due to insufficient feed for continuous operation. There has been no systematic inspection of Rework equipment to provide a basis for estimating the remaining life of the facility. Based on observations and judgement of operating personnel, the facility will be marginally satisfactory for another 3 to 5 years of service. Beyond this time, major upgrades of tower trays and instrumentation will be required. For comparison, Rework is considered to be in better condition than DW-Plant because it was used for a shorter period of time with the GS-Process which introduced corrosive agents and foulants.

The proposed HWPF will contain a replacement Rework facility with sufficient capacity to provide upgrading of D_2O for both the NPR and any existing reactors that remain operational.

DW-Plant

As discussed earlier, DW-Plant is a similar facility to Rework Unit except DW is used to upgrade moderate tritium content D_2O. DW Plant resumed operation 10/91 after being shutdown for four years. The facility was converted from a five to a three stage operation due to equipment problems in the shutdown stages. Even though the remaining stages of DW are operational, it was constructed 39 years ago and cannot be expected to last much longer.

In the original HWPF scope, a low tritium unit was included to replace DW-Plant. Since the facility was not needed for the NPR, it was removed from the scope. An estimated $10-20 million funding increase for HWPF would be required to add the facility back.

The Y-12 plant at Oak Ridge is the primary user of moderate tritium D_2O. Water from SRS is shipped to Y-12 where it is used in the manufacture of materials for the weapons program. Diluted D_2O is then returned to SRS for reconcentration in DW-Plant.

DOE's remaining inventory of moderate tritium D_2O is limited (42 MT at SRS) and it would soon be depleted without the DW-Plant's upgrading capability . No other DOE facilities are capable of upgrading the diluted D_2O.

100-Area D_2O Facilities

The 100-Area D_2O facilities included in this review are MPF and HAM. The Moderator Processing Facility (MPF) is a D_2O purification facility (filters, oil decanter, ion exchange) located in 105-P. This facility is used to treat degraded moderator (<12 CPM) which will be feed for the Rework Unit. MPF was last operated in 12/89. A backlog of over 1300 drums accumulated. These drums require processing in MPF to remove impurities (such as chlorides) and reduce conductivity. The moderator in MPF feed drums is corrosive and there is a concern that the drums will leak.

When the decision was made to not restart the 100-P Reactor, plans were to abandon P-Area and not operate MPF. This would have left SRS without a method of processing this large backlog of moderator until HWPF was operational. The Task Team decided to issue recommendations at that time (see Reference 5) to continue operating MPF until a

RA025-02

Y-12 PLANT LABORATORY REPORT

RECEIVED	REPORT DATE	TYPE REPORT	BATCH-NUMBER LOC	MTC	REQUISITIO
03-19-84	04-05-84	FINAL	0060-H1-8101	0060	777465

CHEMICAL ANALYSIS

.200000 G/G D
.996000 G/G D2O

PHYSICAL PROPERTIES

32.00 MCI/L TRITIUM (MICROCURIE/L)
99.5300 ATOM % D

RA025-02

Y-12 PLANT LABORATORY REPORT

RECEIVED	REPORT DATE	TYPE REPORT	BATCH-NUMBER LOC	MTC	REQUISITION
03-19-84	04-05-84	FINAL	0060-H1-8103	0060	777467

CHEMICAL ANALYSIS

.200000 G/G D
.996000 G/G D2O

PHYSICAL PROPERTIES

34.00 MCI/L TRITIUM (MICROCURIE/L)
99.5900 ATOM % D

RA025-02

Y-12 PLANT LABORATORY REPORT

RECEIVED	REPORT DATE	TYPE REPORT	BATCH-NUMBER LOC	MTC	REQUISITION
03-19-84	04-05-84	FINAL	0060-H1-8105	0060	777469

CHEMICAL ANALYSIS

.200000 G/G D
.996000 G/G D2O

PHYSICAL PROPERTIES

34.00 MCI/L TRITIUM (MICROCURIE/L)
99.5900 ATOM % D

RA025-02

Y-12 PLANT LABORATORY REPORT

RECEIVED	REPORT DATE	TYPE REPORT	BATCH-NUMBER LOC	MTC	REQUISITION
03-19-84	04-05-84	FINAL	0060-H1-8107	0060	777471

CHEMICAL ANALYSIS

.200000 G/G D
.996000 G/G D2O

PHYSICAL PROPERTIES

33.00 MCI/L TRITIUM (MICROCURIE/L)
99.5700 ATOM % D

RA025-02 Y-12 PLANT LABORATORY REPORT

RECEIVED	REPORT DATE	TYPE REPORT	BATCH-NUMBER LOC	MTC	REQUISITION
07-12-84	07-25-84	FINAL	0060-HI-8201	0060	777668

CHEMICAL ANALYSIS

.200000 G/G D
.996000 G/G D2O

PHYSICAL PROPERTIES

18.00 MCI/L TRITIUM (MICROCURIE/L)
99.5500 ATOM % D

RA025-02 Y-12 PLANT LABORATORY REPORT

RECEIVED	REPORT DATE	TYPE REPORT	BATCH-NUMBER LOC	MTC	REQUISITION
07-12-84	07-25-84	FINAL	0060-HI-8203	0060	777670

CHEMICAL ANALYSIS

.200000 G/G D
.996000 G/G D2O

PHYSICAL PROPERTIES

18.00 MCI/L TRITIUM (MICROCURIE/L)
99.5400 ATOM % D

RA025-02

Y-12 PLANT LABORATORY REPORT

RECEIVED	REPORT DATE	TYPE REPORT	BATCH-NUMBER LOC	MTC	REQUISITION
07-12-84	07-25-84	FINAL	0060-HI-8205	0060	777672

CHEMICAL ANALYSIS

.200000 G/G D
.996000 G/G D20

PHYSICAL PROPERTIES

13.00 MCI/L TRITIUM (MICROCURIE/L)
99.5600 ATOM % D

RA025-02

Y-12 PLANT LABORATORY REPORT

RECEIVED	REPORT DATE	TYPE REPORT	BATCH-NUMBER LOC	MTC	REQUISITION
02-15-85	03-07-85	FINAL	0060-00-8301	0060	777962

CHEMICAL ANALYSIS

.200000 G/G D
.996000 G/G D20

PHYSICAL PROPERTIES

51.00 MCI/L TRITIUM (MICROCURIE/L)
99.5990 ATOM % D

RA025-02

Y-12 PLANT LABORATORY REPORT

RECEIVED	REPORT DATE	TYPE REPORT	BATCH-NUMBER LOC	MTC	REQUISITION
02-15-85	03-07-85	FINAL	0060-00-8303	0060	777964

CHEMICAL ANALYSIS

.200000 G/G D
.996000 G/G D20

PHYSICAL PROPERTIES

25.00 MCI/L TRITIUM (MICROCURIE/L)
99.5800 ATOM % D

RA025-02

Y-12 PLANT LABORATORY REPORT

RECEIVED	REPORT DATE	TYPE REPORT	BATCH-NUMBER LOC	MTC	REQUISITION
02-15-85	03-07-85	FINAL	0060-00-8305	0060	777966

CHEMICAL ANALYSIS

.200000 G/G D
.996000 G/G D20

PHYSICAL PROPERTIES

46.00 MCI/L TRITIUM (MICROCURIE/L)
99.6010 ATOM % D

RA025-02

Y-12 PLANT LABORATORY REPORT

RECEIVED	REPORT DATE	TYPE REPORT	BATCH-NUMBER LOC	MTC	REQUISITION
02-15-85	03-07-85	FINAL	0060-00-8307	0060	777968

CHEMICAL ANALYSIS

.200000 G/G D
.996000 G/G D20

PHYSICAL PROPERTIES

50.00 MCI/L TRITIUM (MICROCURIE/L)
99.5010 ATOM % D

OFFICIAL REPORT

'2/14/94 09:02:14

Y-12 ANALYTICAL SERVICES ORGANIZATION

UBMITTER	ADDRESS	CUSTOMER ID	REQ NO	SAMPLE NO	MTC	STATUS
A HEADRICK	9204-2 MS 8132	636198	636198	R943260000	0050	APPROVED

ATE SAMPLED: 11/21/94 00:00:00 DATE NEEDED: 12/22/94 LOCATION: CHARGE #: 26010420

ATE RECEIVED: 11/22/94 DATE COMPLETED: 12/14/94 PROJECT CODE: CASE:

AMPLER: LAH SAMPLE DESCRIPTION: RAINWATER FINAL APPROVAL:

OMMENTS: 636198 WATER SAMPLE (RAINWATER) #11 TRITIUM

EST: 7491 TRITIUM BY LIGUID SCINTILLATION

EP MTH: PROC MTH: PHASE: REPLICATE: 1 STATUS: APPROVED

OMMENTS: THE TRITIUM RESULT REPORTED IS 0.18 PCI/ML +/- 0.013. THE MDA FOR THE ANALYSIS IS 0.20 PCI/ML.

TIME ANALYZED: APPROVER: EL6

S NUMBER	DETERMINATION	DT	RESULT	CONFIDENCE	UNIT
	Tritium		0.18		nanoCuries/gram

*** LAST PAGE ***

88 Shipment D_2O

T_3 $\bar{x} = 98.75$ uCi/L * Assume all of the T_3 in the D_2O was in the D_2 gas produced.

T_3 (gas) = 98.75 uCi/L $\times \frac{1\ L}{1{,}105.34\ g} \times 4.97 =$ 444 nCi/g D_2

89 Shipment D_2O

T_3 $\bar{x} = 54.87$ uCi/L

T_3 (gas) = 54.87 uCi/L $\times \frac{1\ L}{1{,}105.34\ g} \times 4.97 =$ 247 nCi/g D_2

90 Shipment D_2O

T_3 $\bar{x} = 0.23$ uCi/L

T_3(gas) ≈ 0.23 uCi/L $\times \frac{1\ L}{1{,}105.34\ g} \times 4.97 =$ 1 nCi/g D_2

88 shipment

$n = 81$ net wt. 40,469.80 ~~Kg~~ lbs. or 18,356.79 Kg

$\Sigma x_i = 7,999$

$\bar{x} = 98.75\ \mu Ci/L$

89 shipment

$n = 40$ net wt. 19,943.60 ~~Kg~~ lbs. or 9,046.26 Kg

$\Sigma x_i = 2195$

$\bar{x} = 54.87\ \mu Ci/L$

90 shipment

$n = 40$ 19,388.33 lbs or 8,794.40 Kg

$\Sigma x_i = 9.27$

$\bar{x} = .23\ \mu Ci/L$

ensity of D_2O @ 20°C is 1.10534 g/cc

$$\frac{1.10534\ g}{cc} \times \frac{1000\ cc}{L} = 1,105.34\ g/L$$

$$\frac{1,105.34\ g}{L} \times \frac{1\ Kg}{1000\ g} = 1.1053\ Kg/L$$

88 shipment

$$18,356.79\ Kg \times \frac{1\ L}{1.1053\ Kg} = 16,607.97\ L$$

$$16,607.97\ L \times \frac{98.75\ \mu Ci}{L} = 1,640,037.1\ \mu Ci \Rightarrow 1.64\ Ci$$

I N T E R O F F I C E M E M O R A N D U M

Date: 26-Aug-1992 02:59pm EDT
From: Jerry B Hunt
HUNTJB AT A1 AT OCU1
Dept: 2366
Tel No: 4-3547

TO: Richesin, R Michael (RICHESINRM AT A1 AT OCB)

CC: Bowers, B G (BOWERSBG AT A1 AT OCB)
CC: Fortune, Bruce Robert (FORTUNEBR AT A1 AT OCB)
CC: B J Russell (RUSSELLBJ1 AT A1 AT OCU1)
CC: Trotter, Steven Mack (TROTTERSM AT A1 AT OCB)

Subject: Heavy Water Exceeding Specifications

Mike--

I have reviewed the health physics recommendations concerning the use of heavy water containing slight tritium contamination. Although our present specifications place a maximum level of 0.4 microCuries per milliliter, I anticipate no health physics problems associated with the processing of one drum of heavy water with an activity concentration of 0.749 microCuries per milliliter.

Should you have any questions, please feel free to call me.

Jerry Hunt (4-3547)

I N T E R O F F I C E M E M O R A N D U M

Date: 23-Jul-1992 06:02pm EDT
From: Jerry B Hunt
HUNTJB AT A1 AT OCU1
Dept: 2366
Tel No: 4-3547

TO: See Below

Subject: Tritium Concentration in Heavy Water

Bill/Mike--

I have evaluated the impact of processing heavy water with a maximum tritium concentration of 1 microcurie/ml. The evaluation was performed using derived air concentrations from Attachment 1 of DOE Order 5480.11, "Radiation Protection for Occupational Workers". The calculated "annual limit on intake" (ALI) is somewhat lower using DOE guidance than is stated in Publication 30 of the International Commission on Radiological Protection (48,000 microcuries vs. 81,000 microcuries); however, small amounts of heavy water at this concentration could be process safely under present recommendations. The calculated amount to ·ive a committed effective dose equivalent of 100 mrem (the dose ımit for a member of the general public, 2% of the occupational worker limit) would be 1.6 liters either ingested or inhaled. Consistent processing of heavy water at this level would require a reevaluation of present controls which would likely result in increased bioassay and air sampling programs.

5000 mrem

In keeping with the Plant's ALARA Policy, I would recommend that we keep our upper limit of 0.4 microcuries/ml and treat any above that level as a special case requiring special evaluation by health physics personnel. Using this guidance to address our present problem, I recommend processing the existing drum of heavy water with 0.42 microcuries/ml of tritium using routine precautions for this operation.

Should you have any questions, please feel free to call me at 4-3547.

Jerry Hunt
Health Physics Department

Distribution:

TO:	Richesin, R Michael	(RICHESINRM AT A1 AT OC
TO:	Muenzer, William A	(MUENZERWA AT A1 AT OCB
CC:	Danny P Rowan	(ROWANDP AT A1 AT OCU1
CC:	B J Russell	(RUSSELLBJ1 AT A1 AT OC
CC:	Bowers, B G	(BOWERSBG AT A1 AT OCB
CC:	Trotter, Steven Mack	(TROTTERSM AT A1 AT OCB
CC:	Fortune, Bruce Robert	(FORTUNEBR AT A1 AT OCB

MARTIN MARIETTA

Internal Correspondence

MARTIN MARIETTA ENERGY SYSTEMS, INC.

October 27, 1986

Distribution

Subject: Heavy Water Tritium Levels

All deuterium gas customers should be notified of a future change in the heavy water tritium levels. SRO has a depleted inventory of "low level" tritium water, 0.002 microcuries/ml (maximum). Future heavy water shipments will be of "moderate" tritium levels. The levels will range from 0.003 microcuries/ml (minimum) to 0.4 microcuries/ml (maximum). The increase in heavy water tritium levels will also raise the levels in the deuterium gas. Customers should review their specifications. If the tritium levels will be a problem, please have them contact Peggy Hardin (574-3794), R. W. Presley (574-1898), or S. D. Arnett (576-2529).

S. D. Arnett

S. D. Arnett, 9204-2, MS-5

cc: Peggy Hardin, 9103, MS-3
S. W. Lockett, 9103, MS-3
R. W. Presley, 9201-5, MS-9
W. A. Muenzer, 9204-2, MS-5

MARTIN MARIETTA

Internal Correspondence

MARTIN MARIETTA ENERGY SYSTEMS, INC.

June 25, 1987

S. D. Arnett

Health Physics Recommendations Associated With
Increased Tritium Level in Heavy Water Shipments

Due to the increase in tritium levels in shipments of heavy water from Savannah River Operations (SRO), I have reevaluated the health physics concerns associated with 9204-2 deuterium production operations. Recommended limits are derived from the International Commission on Radiological Protection, Publication 30 (ICRP 30), *Limits for Intakes of Radionuclides by Workers*, and DOE Order 5480.1A, Chapter 11, *Radiation Protection*.

Although increased concentrations in heavy water will range from 0.003 μCi/mL to 0.4 μCi/mL, calculations were performed using the maximum value in order to provide a conservative estimate of potential exposure to workers. ICRP 30 recommends a maximum tritium intake by ingestion or inhalation of 81,000 μCi annually, which corresponds to an intake of 202.5 liters (53.5 gallons) of heavy water at the maximum tritium concentration. Maximum air concentrations should be below 5 μCi/m^3 for tritiated water vapor, based on standard occupational breathing levels for a 40-hour week and a 50-week year.

In a worse-case scenario, with 100 percent saturated air at 70°F and with the maximum tritium concentration in heavy water, recommended air concentrations could be exceeded in localized areas. Although this scenario is highly unlikely, I recommend the following actions to assure that exposures are kept as low as reasonably achievable:

✓ 1. Heavy water should be stored in closed containers and processed in a manner that minimizes evaporation.

✓ 2. Nonpermeable gloves should be used by all employees whose hands come in contact with heavy water due to the risk of skin absorption. For the same reason, other skin contact should be avoided.

✓ 3. A list of employees involed in the processing of heavy water should be forwarded to the Radiation Safety Department for possible inclusion in the urinalysis program.

✓ 4. An audit should be performed by health physics and supervisory personnel to identify any other potential risks to employees.

It should be noted that tritium in its natural gaseous state is far less hazardous (by four orders of magnitude) than tritiated water (liquid or

vapor). For this reason, containment controls should be concentrated on the processing of heavy water as noted in these recommendations.

Please feel free to call me if you have any questions.

J. B. Hunt

J. B. Hunt, 9711-1, MS 3 (4-3547) - NoRC

JBH:ps

cc: W. T. Mee
W. A. Muenzer
D. P. Rowan
B. F. Rutherford
File - JBH

MARTIN MARIETTA

Internal Correspondence

MARTIN MARIETTA ENERGY SYSTEMS, INC.

September 18, 1987

S. D. Arnett

Health Physics Audit of the
Deuterium Processing Facility, 9805-1

The subject facility was audited on September 18, 1987, to identify any health physics concerns with the receiving, sampling, and processing of deuterium. This audit was performed in response to proposed increases in tritium concentration in the deuterated water received from the Savannah River Plant. The audit team consisted of F. J. Ludwig and J. B. Hunt of the Radiation Safety Department and S. D. Arnett of 9204-2 operations.

No special health physics problems were identified. Operating procedures and existing facilities are more than adequate for protection of personnel from any expected increase in tritium concentration. There are no new recommendations, and this memorandum is documentation that the audit was performed.

If you have any questions, please feel free to call me.

J. B. Hunt

J. B. Hunt, 9711-1, MS 3 (4-3547) - NoRC

JBH:ps

cc: F. J. Ludwig/D. P. Rowan
W. T. Mee
W. A. Muenzer
File - JBH

MARTIN MARIETTA

Internal Correspondence

MARTIN MARIETTA ENERGY SYSTEMS, INC.

March 11, 1988

W. A. Muenzer

Tritium Levels in Heavy Water

A list of Beta-2 Chemistry Department operating personnel was forwarded to the Radiation Safety Department for consideration into the urinalysis program. In a telephone conversation with John Emch and the evaluation done by J. B. Hunt on the present and future concentration of tritium in heavy water feed, both agree that subjecting the operating personnel to urinalysis is unnecessary due to the minute amount of exposure.

S. D. Arnett

S. D. Arnett, 9204-2, MS-5 (6-2529)

SDA:kld

cc: J. Emch
T. Ford
J. B. Hunt
File - SDA - NoRC

I N T E R O F F I C E M E M O R A N D U M

Date: 22-Sep-1989 17:41 EDT
From: Jerry Hunt
HUNTJB AT A1 AT OCU1
Dept: Health Physics
Tel No: 4-3547

TO: HAGANGF

CC: MEDLEYAR MUENZERWA ROWANDP SMITHCB

Subject: Radiological Posting for Deuterium Facility
FILE: READ 005887

Gary--

After reviewing the expected tritium concentration in heavy water from Savannah River against the new DOE Order 5480.11, "Radiation Protection for Occupational Workers", the potential does exist for this area to be classified as a "Radiological Area". The only way we can be certain is to take a special survey of the area.

ease provide me a name of a contact that can provide the necessary operational input. I will make the necessary arrangements to have the special survey conducted.

Jerry

Internal Correspondence

MARTIN MARIETTA ENERGY SYSTEMS, INC.

October 13, 1989

G. F. Hagan

Radiological Posting of Building 9805-1

At your request a radiological survey was conducted of the heavy water facility in building 9805-1. The survey was taken on the most heavily trafficked areas using wet tab smears analyzed for beta activity (tritium) using a liquid scintillation counter at the Environmental Radiochemical Laboratory located in Building 9720-6.

The maximum beta activity level was less than 5% of the present DOE standard of 1,000 disintegrations per minute per 100 cm^2. Activity levels are shown on attachment 1. The results show that radiation posting is not presently required in building 9805-1.

If you have any questions, please contact Mike Henderson at 4-3536.

J. B. Hunt

J. B. Hunt

cc: S. D. Arnett
A. R. Medley
W. A. Muenzer
C. B. Smith
J. D. Stout

COMMENTS: Tritium Floor Smears taken in operating areas of 9805-1

SAMPLE NUMBER	DESCRIPTION	ALPHA (d/m/100cm²) Removable	BETA (d/m/100cm²) Removable
1	walkway at Drum Storage Area	--	1.5
2	Drum Storage Area	--	1.5
3	Roll-up door entrance	--	.92
4	area at operator's desk	--	9.6
5	walkway at cell area	--	0
6	walkway at cell area	--	1.7
7	freon units	--	0
8	east wall at steam area	--	2.3
9	scales at 2800 pit	--	7.4
10	2800 Pit	--	0
11	Hoffer Compressor	--	.23
12	control panel	--	0
13	Foreman's office	--	.27
14	bathroom	--	1.6
15	fill head area	--	2.3
16	mezzanine walkway	--	0
17	EP100 Tank on Mezzanine	--	.18
18	vacuum header area	--	9.2
19	North Dock Area	--	25
20	South Dock Area	--	36
21	Oil Drum Storage Room	--	24
22	D2 Banks - D Bank - 9805 Garage	--	48
23	East Wall of 9805 Garage	--	46

TECHNICIAN: M. D. Henderson BADGE NO. 15870

DOE 5480.11 Attachment 2 shows the posting limits for Tritium removeable contamination as 1000 dpm/100 cm^2

RA025-02 Y-12 PLANT LABORATORY REPORT

RECEIVED	REPORT DATE	TYPE REPORT	BATCH-NUMBER	LOC	MTC	REQUISITIO
09-08-88	10-28-88	FINAL	0060-HI-9001		0060	631641

CHEMICAL ANALYSIS

.200000	G/G	D
.995000	G/G	D20

PHYSICAL PROPERTIES

27.00	MCI/L	TRITIUM (MICROCURIE/
99.4500	ATOM %	D
4.5000	LOG	PH

RA025-02 Y-12 PLANT LABORATORY REPORT

RECEIVED	REPORT DATE	TYPE REPORT	BATCH-NUMBER	LOC	MTC	REQUISITIO
09-08-88	10-28-88	FINAL	0060-HI-9003		0060	631643

CHEMICAL ANALYSIS

.200000	G/G	D
.995000	G/G	D20

PHYSICAL PROPERTIES

21.00	MCI/L	TRITIUM (MICROCURIE/
99.4500	ATOM %	D
4.5000	LOG	PH

RA025-02 Y-12 PLANT LABORATORY REPORT

RECEIVED	REPORT DATE	TYPE REPORT	BATCH-NUMBER LOC	MTC	REQUISITIO
09-08-88	10-28-88	FINAL	0060-HI-9005	0060	631645

CHEMICAL ANALYSIS

.200000	G/G	D
.994000	G/G	D2O

PHYSICAL PROPERTIES

18.00	MCI/L	TRITIUM (MICROCURIE/
99.3300	ATOM %	D
4.6000	LOG	PH

RA025-02 Y-12 PLANT LABORATORY REPORT

RECEIVED	REPORT DATE	TYPE REPORT	BATCH-NUMBER LOC	MTC	REQUISITION
09-08-88	10-28-88	FINAL	0060-HI-9007	0060	631647

CHEMICAL ANALYSIS

.200000	G/G	D
.994000	G/G	D2O

PHYSICAL PROPERTIES

20.00	MCI/L	TRITIUM (MICROCURIE/L
99.3400	ATOM %	D
5.0000	LOG	PH

RA025-02 Y-12 PLANT LABORATORY REPORT

RECEIVED	REPORT DATE	TYPE REPORT	BATCH-NUMBER	LOC	MTC	REQUISITION
09-08-88	10-28-88	FINAL	0060-HI-9009		0060	631649

CHEMICAL ANALYSIS

.200000	G/G	D
.994000	G/G	D20

PHYSICAL PROPERTIES

14.00	MCI/L	TRITIUM (MICROCURIE/L
99.3500	ATOM %	D
4.8000	LOG	PH

RA025-02 Y-12 PLANT LABORATORY REPORT

RECEIVED	REPORT DATE	TYPE REPORT	BATCH-NUMBER	LOC	MTC	REQUISITION
09-08-88	10-28-88	FINAL	0060-HI-9011		0060	631776

CHEMICAL ANALYSIS

.200000	G/G	D
.994000	G/G	D20

PHYSICAL PROPERTIES

50.00	MCI/L	TRITIUM (MICROCURIE/L
99.3200	ATOM %	D
4.7000	LOG	PH

RA025-02 Y-12 PLANT LABORATORY REPORT

RECEIVED	REPORT DATE	TYPE REPORT	BATCH-NUMBER LOC	MTC	REQUISITIO
09-08-88	10-28-88	FINAL	0060-HI-9013	0060	631778

CHEMICAL ANALYSIS

.200000	G/G	D
.994000	G/G	D20

PHYSICAL PROPERTIES

48.00	MCI/L	TRITIUM (MICROCURIE/
99.3400	ATOM %	D
4.8000	LOG	PH

RA025-02 Y-12 PLANT LABORATORY REPORT

RECEIVED	REPORT DATE	TYPE REPORT	BATCH-NUMBER LOC	MTC	REQUISITIO
09-08-88	10-28-88	FINAL	0060-HI-9015	0060	631780

CHEMICAL ANALYSIS

.200000	G/G	D
.996000	G/G	D20

PHYSICAL PROPERTIES

30.00	MCI/L	TRITIUM (MICROCURIE/
99.5800	ATOM %	D
4.7000	LOG	PH

RA025-02 Y-12 PLANT LABORATORY R P

RECEIVED	REPORT DATE	TYPE REPORT	BATCH-NUMBER	LOC	MTC	REQUISITION
08-10-92	08-25-92	FINAL	M RI-CH-ESIN		00oC	571492

CHEMICAL ANALYSIS PHYSICAL PROPERTIES

83.42 UCI/L TRITIUM (MICROCURIE/L

98 shipment

RECEIVED	REPORT DATE	TYPE REPORT	BATCH-NUMBER LOC	MTC	REQUISITION
08-10-92	08-25-92	FINAL	M RI-CH-ESIN	0060	571493

CHEMICAL ANALYSIS

PHYSICAL PROPERTIES

.1F UCI/L TRITIUM (MICROCURIE/L

RECEIVED	REPORT DATE	TYPE REPORT	BATCH-NUMBER LOC	MTC	REQUISITION
08-10-92	03-25-92	FINAL	M RI-CH-ESIN	0060	571494

CHEMICAL ANALYSIS

PHYSICAL PROPERTIES

51.23 UCT/L TRITIUM (MICROCURIES/L

Drum Numbers	Gross	Tare	Net	100%	MeV/mT T-3	Curies	Kgs	DZA-FZF-36 MAA-328
05041	579.6	78.0	501.6	500.6	.04	.008	227.1	✓
06455	573.8	74.2	499.6	498.7	.04	.008	226.2	✓ 1670
06530	569.8	69.4	500.4	499.3	.006	.001	226.5	✓
08924	572.4	72.2	500.2	499.0	.005	.001	226.3	✓
10149	572.8	72.2	500.6	499.5	.004	.001	226.6	inside
11555	572.0	71.8	500.2	499.1	.01	.002	226.4	✓
11909	572.4	72.2	500.2	499.1	.04	.008	226.4	✓
11935	573.2	72.4	500.8	499.7	.01	.002	226.7	✓
12184	570.6	71.6	499.0	498.0	.04	.008	225.9	?
12220	571.8	72.2	499.6	498.5	.005	.001	226.1	✓
12293	570.2	70.8	499.4	498.3	.01	.002	226.0	✓
12584	571.2	71.0	500.2	499.2	.006	.001	226.4	✓
12961	572.2	71.6	500.6	499.4	.005	.001	226.5	?
12982	572.6	71.2	501.4	500.3	.004	.001	226.9	✓
13391	571.4	70.8	500.6	499.6	.04	.008	226.6	✓
14859	570.8	70.6	500.2	499.1	.03	.006	226.4	✓
14883	572.2	72.6	499.6	498.6	.03	.006	226.2	✓
14895	575.2	75.0	500.2	499.2	.01	.002	226.4	✓
14897	571.6	71.4	500.2	499.1	.004	.001	226.4	✓
14899	571.8	71.4	500.4	499.3	.03	.006	226.5	✓
14916	573.6	73.4	500.2	499.1	.10	.02	226.4	inside
14953	570.6	70.8	499.8	498.8	.03	[illegible]	226.[illegible]	✓
14977	574.2	73.6	500.6	499.6	.01	[illegible]	226.6	✓
14996	570.8	70.6	500.2	499.1	.03	[illegible]	226.4	✓
15002	572.6	73.2	499.4	498.3	.01	[illegible]	226.0	✓
15142	569.2	69.2	500.0	499.0	.02	.004	226.3	?
15236	574.6	74.8	499.8	498.8	.01	.002	226.3	✓
15275	570.8	70.0	500.8	499.8	.06	.01	226.7	✓

Drum Numbers	Gross	Tare	Net	100%	T-3	Curies	Kgs	DZA-FZF-36 MAA-328
15283	570.6	70.4	500.2	499.3	.05	.01	226.5	✓ 1670
15284	571.6	70.8	500.8	499.7	.05	.01	226.7	✓
15312	570.8	70.0	500.8	499.7	.06	.01	226.7	✓
15370	570.2	70.8	499.4	498.5	.05	.01	226.1	✓
15391	571.0	71.4	499.6	498.5	.03	.006	226.1	✓
15404	570.8	71.2	499.6	498.6	.05	.01	226.2	✓
15453	571.8	70.4	501.4	500.3	.06	.01	226.9	?
15457	572.2	69.8	502.4	501.5	.05	.01	227.5	✓
15473	570.6	70.2	500.4	499.4	.05	.01	226.5	✓
15526	570.4	70.0	500.4	499.4	.05	.01	226.5	✓
15538	571.2	70.4	500.8	499.8	.05	.01	226.7	✓
15566	570.8	69.2	501.6	500.6	.06	.01	227.1	✓
15569	570.6	70.4	500.2	499.2	.05	.01	226.4	✓
15605	570.4	69.8	500.6	499.6	.02	.004	226.6	✓
15636	570.6	70.6	500.0	498.9	.05	.01	226.3	
15694	571.0	71.6	499.4	498.5	.03	.006	226.1	✓
16259	573.4	73.0	500.4	499.3	.27	.06	226.5	✓
17025	568.8	71.0	497.8	497.0	.05	.01	225.4	✓
17256	567.4	69.6	497.8	496.7	.04	.01	225.3	?
17264	567.4	70.2	497.2	496.4	.04	.01	225.2	✓
17296	568.0	69.8	498.2	497.3	.11	.02	225.6	✓
17310	569.0	72.4	496.6	495.7	.06	.01	224.8	✓
17316	570.2	72.2	498.0	497.0	.04	.01	225.4	✓
17318	569.4	72.6	496.8	495.8	.09	.02	224.9	✓
17327	567.6	69.8	497.8	496.9	.08	.02	225.4	✓
17332	567.6	69.6	498.0	497.1	.06	.01	225.5	✓
17356	567.4	70.0	497.4	496.5	.11	.02	225.2	✓
17357	567.6	69.6	498.0	497.1	.11	.02	225.5	in [illegible]

DZA-FZF-328
MAA-328

DRUM NUMBERS	GROSS	TARE	NET	100%	T-3	CURIES	Kgs	
17373	569.0	70.2	498.8	497.9	.11	.02	225.8	✓ 1670
17396	570.4	72.6	497.8	497.0	.05	.01	225.4	✓
17422	570.6	72.8	497.8	496.9	.04	.01	225.4	✓
17432	569.6	72.4	497.2	496.3	.08	.02	225.1	✓
17445	571.0	72.6	498.4	497.5	.06	.01	225.7	✓
17479	570.2	72.6	497.6	496.5	.04	.01	225.2	✓
17491	571.6	72.8	498.8	498.0	.04	.01	225.9	✓
17500	570.6	72.2	498.4	497.5	.04	.01	225.7	✓
17587	571.4	71.0	500.4	499.3	.27	.06	226.5	✓
17646	568.6	71.0	497.6	496.7	.05	.01	225.3	✓
18404	570.8	71.6	499.2	498.2	.27	.06	226.0	✓
18434	570.8	71.2	499.6	498.5	.40	.08	226.1	✓
18451	572.0	72.2	499.8	499.2	.33	.07	226.4	✓
18509	571.4	71.2	500.2	499.3	.31	.06	226.5	✓
18560	571.6	71.8	499.8	499.0	.33	.07	226.3	✓
18581	571.0	71.0	500.0	499.2	.32	.07	226.4	✓
18603	572.0	71.4	500.6	499.8	.33	.07	226.7	✓
18616	571.0	70.8	500.2	499.5	.33	.07	226.6	✓
18617	571.4	71.2	500.2	499.4	.33	.07	226.5	✓
18621	571.2	70.8	500.4	499.7	.33	.07	226.7	✓
18657	571.0	70.8	500.2	499.2	.29	.06	226.4	✓
18688	570.0	71.2	498.8	497.9	.29	.06	225.8	✓
18723	571.2	71.4	499.8	499.0	.31	.06	226.3	✓
18731	571.0	70.8	500.2	499.3	.32	.07	226.5	✓
18743	572.0	71.4	500.6	499.6	.27	.06	226.6	✓
				40,390.8		1.66	18,320.9	

om SRO

Drum #	μCi/L
05041	40
06455	40
06530	6
08924	5
10149	4
11555	10
11909	40
11935	10
12184	40
12220	5
12293	10
12584	6
12961	5
12982	4
13391	40
14859	30
14883	30
14895	10
14897	4
14899	30
14196	100
14953	30
14977	10
14996	30
15002	10
15142	20
15236	10
15275	60

Drum #	μCi/L
15283	50
15284	50
15312	60
15370	50
15391	30
15404	50
15453	60
15457	50
15473	50
15526	50
15538	50
15566	60
15569	50
15605	20
15636	50
15694	30
16259	270
17025	50
17256	40
17264	40
17296	110
17310	60
17316	40
17318	40
17327	80
17332	60
17356	110
17357	110

Drum #	μCi/L
17373	110
17396	50
17422	40
17432	80
17445	60
17479	40
17491	40
17500	40
17587	270
17646	50
18404	270
18434	400
18451	330
18509	310
18560	330
18581	320
18603	330
18616	330
18617	330
18626	330
18657	290
18688	290
18723	310
18731	320
18743	270

n = 81 (data points)

$\bar{X}$ = 98.7531 μCi/L

sx = 114.2623 estimate of population deviation

σx = 113.5547 std. deviation of the sample

Σx_i = 7,999

UNCLASSIFIED

Y-12 PLANT LABORATORY REPORT PAGE 1

SUBMITTER	CUSTOMER ID	REQ NO	SAMPLE NO	MTC
Lewis, E Faye	M RICHESON	562027	R922170015	0060

DATE RECEIVED: 08/04/92 DATE COMPLETED: 08/17/92

SAMPLE DESCRIPTION : HEAVY WATER

TEST: 453 REPLICATE: 1

Here are the results for the Atom % deuterium on 42 of the 45 heavy water samples you submitted. The percent D2O will be the same number as the atom % D for these types of samples.

REQ	ATOM PERCENT DEUTERIUM
571450	99.78
571451	99.77
571452	99.81
571453	99.80
571454	99.81
571455	99.76
571456	99.80
571457	99.75
571458	99.79
571459	99.73
571460	99.71
571461	99.80
571462	99.66*
571463	99.63*
571464	99.63*
571465	99.71*
571466	99.74
571467	99.74
571468	99.76
571469	99.79
571470	99.79
571471	99.77
571472	99.76
571473	99.74
571474	99.72
571475	99.80
571476	
571477	
571478	99.76
571479	99.72
571480	99.74
571481	99.77 Plastic liner

UNCLASSIFIED

89 shipment

571482	99.80
571483	99.75
571484	99.76
571485	99.78
571486	99.73
571487	99.73
571488	99.67*
571489	99.66*
571490	99.61*
571491	99.68*
571492	99.68*
571493	99.61*
571494	99.61*

* These samples were submitted in glass bottles which had a paper liner on the inside of the bottle top. If the tops of these bottles had not been properly conditioned to remove all of the absorbed and adsorbed water, than the atom % D for these samples would be artificially low as the averages below tend to indicate.

Average of samples with paper liners in top	99.65
Average of samples with plastic liner in top	99.765

All items which come into contact with the heavy water MUST be properly condition to allow us to achieve as accurate an answer as possible. If you have any question concerning sampling procedure, please feel free to call me.

J.C. Oswald, 4-2410

RA025-02 Y-12 PLANT LABORATORY (ORT

RECEIVED	REPORT DATE	TYPE REPORT	BATCH-NUMBER	LOC	MTC	REQUISITIO
05-14-92	06-02-92	FINAL	6554-91-0865		0060	571255

CHEMICAL ANALYSIS PHYSICAL PROPERTIES

.0187 UCI/ML TRITIUM

avg 98 & 55 uci/l

.0321 SRO's analysis

89 shipment

RA025-02 Y-12 PLANT LABORATORY (PORT

RECEIVED	REPORT DATE	TYPE REPORT	BATCH-NUMBER	LOC	MTC	REQUISITIO'
05-14-92	06-02-92	FINAL	6554-91-0875		0060	571256

CHEMICAL ANALYSIS

PHYSICAL PROPERTIES

.0634 UCI/ML TRITIUM

.088 SRO's analysis

RA025-02 Y-12 PLANT LABORATORY REPORT

RECEIVED	REPORT DATE	TYPE REPORT	BATCH-NUMBER	LOC	MTC	REQUISITIO
05-14-92	06-02-92	FINAL	6554-91-0885		0060	571257

CHEMICAL ANALYSIS

PHYSICAL PROPERTIES

.0153 UCI/ML TRITIUM

.0262 SRO's analysis

RA025-02 Y-12 PLANT LABORATORY PORT

RECEIVED	REPORT DATE	TYPE REPORT	BATCH-NUMBER	LOC	MTC	REQUISITION
05-14-92	06-02-92	FINAL	6554-91-0895		0060	571258

CHEMICAL ANALYSIS

PHYSICAL PROPERTIES

.0577 UCI/ML TRITIUM

.0732 SRO's analysis

RA025-02 Y-12 PLANT LABORATORY REPORT

RECEIVED	REPORT DATE	TYPE REPORT	BATCH-NUMBER LOC	MTC	REQUISITION
08-10-92	08-25-92	FINAL	M RI-CH-ESIN	0060	571450

CHEMICAL ANALYSIS PHYSICAL PROPERTIES

19.74 UCI/L TRITIUM (MICROCURIE/L

RA025-02 Y-12 PLANT LABORATORY REP T

RECEIVED	REPORT DATE	TYPE REPORT	BATCH-NUMBER LOC	MTC	REQUISITION
08-10-92	08-25-92	FINAL	M RI-CH-ESIN	0060	571451

CHEMICAL ANALYSIS PHYSICAL PROPERTIES

34.04 UCI/L TRITIUM (MICROCURIE/L

RA025-02 Y-12 PLANT LABORATORY REP T

RECEIVED	REPORT DATE	TYPE REPORT	BATCH-NUMBER	LOC	MTC	REQUISITION
08-10-92	08-25-92	FINAL	M RI-CH-ESIN		0060	571452

CHEMICAL ANALYSIS PHYSICAL PROPERTIES

33.84 UCI/L TRITIUM (MICROCURIE/L

RA025-02 Y-12 PLANT LABORATORY REP

RECEIVED	REPORT DATE	TYPE REPORT	BATCH-NUMBER LOC	MTC	REQUISITION
08-10-92	08-25-92	FINAL	M RI-CH-ESIN	0060	571460

CHEMICAL ANALYSIS PHYSICAL PROPERTIES

19.72 UCI/L TRITIUM (MICROCURIE/L

RA025-02 Y-12 PLANT LABORATORY REP I

RECEIVED	REPORT DATE	TYPE REPORT	BATCH-NUMBER	LOC	MTC	REQUISITION
08-10-92	08-25-92	FINAL	M RI-CH-ESIN		0060	571461

CHEMICAL ANALYSIS PHYSICAL PROPERTIES

28.99 UCI/L TRITIUM (MICROCURIE/L

RA025-02 Y-12 PLANT LABORATORY REP

RECEIVED	REPORT DATE	TYPE REPORT	BATCH-NUMBER	LOC	MTC	REQUISITION
08-10-92	08-25-92	FINAL	M RI-CH-ESIN		0060	571462

CHEMICAL ANALYSIS PHYSICAL PROPERTIES

25.37 UCI/L TRITIUM (MICROCURIE/L

RA025-02 Y-12 PLANT LABORATORY REP I

RECEIVED	REPORT DATE	TYPE REPORT	BATCH-NUMBER LOC	MTC	REQUISITION
08-10-92	08-25-92	FINAL	M RI-CH-ESIN	0060	571463

CHEMICAL ANALYSIS PHYSICAL PROPERTIES

17.45 UCI/L TRITIUM (MICROCURIE/L

RA025-02 Y-12 PLANT LABORATORY REP I

RECEIVED	REPORT DATE	TYPE REPORT	BATCH-NUMBER	LOC	MTC	REQUISITIO
08-10-92	08-25-92	FINAL	M RI-CH-ESIN		0060	571464

CHEMICAL ANALYSIS PHYSICAL PROPERTIES

1.90 UCI/L TRITIUM (MICROCURIE/L

RA025-02 Y-12 PLANT LABORATORY REP

RECEIVED	REPORT DATE	TYPE REPORT	BATCH-NUMBER	LOC	MTC	REQUISITION
08-10-92	08-25-92	FINAL	M RI-CH-ESIN		0060	571465

CHEMICAL ANALYSIS PHYSICAL PROPERTIES

33.77 UCI/L TRITIUM (MICROCURIE/L

RA025-02 Y-12 PLANT LABORATORY REP T

RECEIVED	REPORT DATE	TYPE REPORT	BATCH-NUMBER LOC	MTC	REQUISITION
08-10-92	08-25-92	FINAL	M RI-CH-ESIN	0060	571466

CHEMICAL ANALYSIS PHYSICAL PROPERTIES

1.68 UCI/L TRITIUM (MICROCURIE/L

RA025-02 /-12 PLANT LABORATORY REPC

RECEIVED	REPORT DATE	TYPE REPORT	BATCH-NUMBER LOC	MTC	REQUISITION
08-10-92	08-25-92	FINAL	M RI-CH-ESIN	0060	571467

CHEMICAL ANALYSIS PHYSICAL PROPERTIES

1.17 UCI/L TRITIUM (MICROCURIE/L

RA025-02 Y-12 PLANT LABORATORY REP T

RECEIVED	REPORT DATE	TYPE REPORT	BATCH-NUMBER	LOC	MTC	REQUISITIO
08-13-92	08-25-92	FINAL	M RI-CH-ESIN		0060	571468

CHEMICAL ANALYSIS PHYSICAL PROPERTIES

20.19 UCI/L TRITIUM (MICROCURIE/L

RA025-02 Y-12 PLANT LABORATORY REP

RECEIVED	REPORT DATE	TYPE REPORT	BATCH-NUMBER LOC	MTC	REQUISITION
08-10-92	08-25-92	FINAL	M RI-CH-ESIN	0060	571469

CHEMICAL ANALYSIS PHYSICAL PROPERTIES

26.40 UCI/L TRITIUM (MICROCURIE/L

RA025-02 Y-12 PLANT LABORATORY REP

RECEIVED	REPORT DATE	TYPE REPORT	BATCH-NUMBER LOC	MTC	REQUISITION
08-10-92	08-25-92	FINAL	M RI-CH-ESIN	0060	571470

CHEMICAL ANALYSIS PHYSICAL PROPERTIES

27.76 UCI/L TRITIUM (MICROCURIE/L

RA025-02 Y-12 PLANT LABORATORY REP T

RECEIVED	REPORT DATE	TYPE REPORT	BATCH-NUMBER	LOC	MTC	REQUISITION
08-10-92	08-25-92	FINAL	M RI-CH-ESIN		0060	571471

CHEMICAL ANALYSIS PHYSICAL PROPERTIES

35.68 UCI/L TRITIUM (MICROCURIE/L

RA025-02 Y-12 PLANT LABORATORY REP

RECEIVED	REPORT DATE	TYPE REPORT	BATCH-NUMBER LOC	MTC	REQUISITION
08-26-92	09-16-92	FINAL	6554-91-0875	0060	571472

CHEMICAL ANALYSIS PHYSICAL PROPERTIES

31.26 UCI/L TRITIUM (MICROCURIE/L

RA025-02 f-12 PLANT LABORATORY REP.

RECEIVED	REPORT DATE	TYPE REPORT	BATCH-NUMBER LOC	MTC	REQUISITION
08-10-92	08-25-92	FINAL	M RI-CH-ESIN	0060	571473

CHEMICAL ANALYSIS PHYSICAL PROPERTIES

1.17 UCI/L TRITIUM (MICROCURIE/L

RA025-02 Y-12 PLANT LABORATORY REP

RECEIVED	REPORT DATE	TYPE REPORT	BATCH-NUMBER	LOC	MTC	REQUISITION
08-10-92	08-25-92	FINAL	M RI-CH-ESIN		0060	571474

CHEMICAL ANALYSIS PHYSICAL PROPERTIES

1.90 UCI/L TRITIUM (MICROCURIE/L

RA025-02 /-12 PLANT LABORATORY REP(

RECEIVED	REPORT DATE	TYPE REPORT	BATCH-NUMBER	LOC	MTC	REQUISITION
08-10-92	08-25-92	FINAL	M RI-CH-ESIN		0060	571475

CHEMICAL ANALYSIS PHYSICAL PROPERTIES

33.86 UCI/L TRITIUM (MICROCURIE/L

RA025-02 Y-12 PLANT LABORATORY REP

RECEIVED	REPORT DATE	TYPE REPORT	BATCH-NUMBER LOC	MTC	REQUISITION
08-10-92	08-25-92	FINAL	M RI-CH-ESIN	0060	571478

CHEMICAL ANALYSIS PHYSICAL PROPERTIES

30.57 UCI/L TRITIUM (MICROCURIE/L

RA025-02 f-12 PLANT LABORATORY REP(

RECEIVED	REPORT DATE	TYPE REPORT	BATCH-NUMBER	LOC	MTC	REQUISITION
08-10-92	08-25-92	FINAL	M RI-CH-ESIN		0060	571479

CHEMICAL ANALYSIS PHYSICAL PROPERTIES

23.76 UCI/L TRITIUM (MICROCURIE/L

RA025-02 I-12 PLANT LABORATORY REP

RECEIVED	REPORT DATE	TYPE REPORT	BATCH-NUMBER LOC	MTC	REQUISITION
08-10-92	08-25-92	FINAL	M RI-CH-SIN	0060	571480

CHEMICAL ANALYSIS

PHYSICAL PROPERTIES

360.65 UCI/L TRITIUM (MICROCURIE/L

RA025-02 -12 PLANT LABORATORY REPO

RECEIVED	REPORT DATE	TYPE REPORT	BATCH-NUMBER LOC	MTC	REQUISITION
08-10-92	08-25-92	FINAL	M RI-CH-ESIN	0060	571481

CHEMICAL ANALYSIS PHYSICAL PROPERTIES

51.00 UCI/L TRITIUM (MICROCURIE/L

RA025-02 .-12 PLANT LABORATORY REPC

RECEIVED	REPORT DATE	TYPE REPORT	BATCH-NUMBER LOC	MTC	REQUISITION
08-10-92	08-25-92	FINAL	M RI-CH-ESIN	0060	571482

CHEMICAL ANALYSIS PHYSICAL PROPERTIES

27.09 UCI/L TRITIUM (MICROCURIE/L

RA025-02 Y-12 PLANT LABORATORY REP .T

RECEIVED	REPORT DATE	TYPE REPORT	BATCH-NUMBER LOC	MTC	REQUISITION
08-10-92	08-25-92	FINAL	M RI-CH-ESIN	0060	571483

CHEMICAL ANALYSIS PHYSICAL PROPERTIES

1.24 UCI/L TRITIUM (MICROCURIE/L

RA025-02 /-12 PLANT LABORATORY REPO. .

RECEIVED	REPORT DATE	TYPE REPORT	BATCH-NUMBER LOC	MTC	REQUISITION
08-10-92	08-25-92	FINAL	M RI-CH-ESIN	0060	571484

CHEMICAL ANALYSIS PHYSICAL PROPERTIES

2.17 UCI/L TRITIUM (MICROCURIE/L

RA025-02 /-12 PLANT LABORATORY REPO...

RECEIVED	REPORT DATE	TYPE REPORT	BATCH-NUMBER	LOC	MTC	REQUISITION
08-10-92	08-25-92	FINAL	M RI-CH-ESIN		0060	571485

CHEMICAL ANALYSIS PHYSICAL PROPERTIES

35.80 UCI/L TRITIUM (MICROCURIE/L

RECEIVED	REPORT DATE	TYPE REPORT	BATCH-NUMBER	LOC	MTC	REQUISITION
08-10-92	08-25-92	FINAL	M RI-CH-ESIN		0060	571486

CHEMICAL ANALYSIS

PHYSICAL PROPERTIES

1.60 UCI/L TRITIUM (MICROCURIE/L

RECEIVED	REPORT DATE	TYPE REPORT	BATCH-NUMBER	LOC	MTC	REQUISITION
08-10-92	08-25-92	FINAL	M RI-CH-ESIN		0060	571487

CHEMICAL ANALYSIS

PHYSICAL PROPERTIES

1.57 UCI/L TRITIUM (MICROCURIE/L

RECEIVED	REPORT DATE	TYPE REPORT	BATCH-NUMBER LOC	MTC	REQUISITION
08-10-92	08-25-92	FINAL	M RI-CH-ESIN	0060	571488

CHEMICAL ANALYSIS

PHYSICAL PROPERTIES

52.27 UCI/L TRITIUM (MICROCURIE/L

RECEIVED	REPORT DATE	TYPE REPORT	BATCH-NUMBER LOC	MTC	REQUISITION
08-10-92	08-25-92	FINAL	M RI-CH-ESIN	0060	571489

CHEMICAL ANALYSIS

PHYSICAL PROPERTIES

26.78 UCI/L TRITIUM (MICROCURIE/L

RA025-02 Y-12 PLANT LABORATORY REP

RECEIVED	REPORT DATE	TYPE REPORT	BATCH-NUMBER LOC	MTC	REQUISITION
08-10-92	08-25-92	FINAL	M RI-CH-ESIN	0060	571491

CHEMICAL ANALYSIS

PHYSICAL PROPERTIES

749.00 UCI/L TRITIUM (MICROCURIE/L

Westinghouse
Savannah River Company

P.O. Box 616
Aiken, SC 29802

FAX

April 2, 1992

To: Ben Davis
Oak Ridge, Tenn
615-574-2460

From: Daniel P. Skiff
WSRC, Bldg. 772-D
Aiken, SC
803-725-6828

MESSAGE: Attached is information you requested concerning the 1989 shipment of Heavy Water to Oak Ridge. Please call if you need anything else.

Number Of Pages: 1 (Excluding cover sheet)

SRO's heavy water is sampled before it is shipped out, unless it has been less than one year since the previous sample was taken.

per Don Bowman
on 7-23-92
1-803-725-6837

Mike Riches

HEAVY WATER INFORMATION CONTROL SYSTE
OFF-PLANT SHIPMENTS AND RECEIPTS

REPOR DATE 10-31-89

SHIPMENT LOT NO. K61

DRUM NO	REF NO	DATE	LOT NO	GROSS WT	TARE WT	NET WT	MDL %	100% WT	100% KG	TRITIUM
18316	E43136	10-31-89	K61	571.20	71.00	500.20	99.75	499.20	226.40	.400000
18268	E43112	10-31-89	K61	572.80	71.60	501.20	99.75	500.10	226.80	.420000
17643	D54182	10-31-89	K61	569.60	71.60	498.00	99.71	497.10	225.50	.050000
17511	D54183	10-31-89	K61	569.20	72.40	496.80	99.71	495.90	224.90	.050000
17504	E15758	10-31-89	K61	568.80	71.20	497.60	99.8.	496.80	225.30	.040000
17502	E15904	10-31-89	K61	570.00	72.60	497.40	99.7	496.40	225.20	.040000
17488	E15729	10-31-89	K61	570.40	72.40	498.00	99.8	497.30	225.50	.040000
17474	E15739	10-31-89	K61	568.20	70.00	498.20	99.8	497.40	225.60	.040000
17469	D54146	10-31-89	K61	568.80	72.60	496.20	99.71	495.20	224.60	.100000
17455	D54192	10-31-89	K61	569.20	71.60	497.60	99.8	496.80	225.30	.050000
17431	D54152	10-31-89	K61	568.40	73.00	495.40	99.80	494.50	224.30	.080000
17429	E15757	10-31-89	K61	570.00	72.40	497.60	99.75	496.50	225.20	.040000
17421	E15759	10-31-89	K61	570.20	72.60	497.60	99.75	496.50	225.20	.040000
17405	D54138	10-31-89	K61	569.40	72.40	497.00	99.82	496.20	225.10	.050000
17371	D54174	10-31-89	K61	567.20	70.00	497.20	99.80	496.30	225.10	.050000
17366	E15713	10-31-89	K61	568.40	70.40	498.00	99.81	497.20	225.50	.040000
17337	E15744	10-31-89	K61	571.00	72.40	498.60	99.81	497.80	225.80	.040000
17333	E15742	10-31-89	K61	569.20	72.00	497.20	99.82	496.40	225.20	.040000
17288	E15710	10-31-89	K61	567.00	69.40	497.60	99.82	496.80	225.30	.040000
17276	E15741	10-31-89	K61	567.20	69.80	497.40	99.82	496.60	225.30	.040000
17269	E15711	10-31-89	K61	567.40	69.80	497.60	99.80	496.70	225.30	.040000
17259	E15712	10-31-89	K61	567.40	70.00	497.40	99.79	496.50	225.20	.040000
17188	D54115	10-31-89	K61	567.40	71.40	496.00	99.81	495.20	224.60	.080000
17143	D54181	10-31-89	K61	568.40	71.20	497.20	99.79	496.30	225.10	.050000
14006	D48567	10-31-89	K61	573.00	72.20	500.80	99.75	499.60	226.60	.005000
13817	D48552	10-31-89	K61	571.80	71.40	500.40	99.75	499.20	226.40	.004000
13777	D48554	10-31-89	K61	572.20	71.60	500.60	99.75	499.40	226.50	.004000
13255	D48423	10-31-89	K61	571.40	71.40	500.00	99.78	499.00	226.30	.003000
12737	D48421	10-31-89	K61	569.60	69.80	499.80	99.78	498.80	226.30	.003000
12694	D48512	10-31-89	K61	570.00	70.80	499.20	99.78	498.20	226.00	.050000
12088	D48509	10-31-89	K61	571.80	72.20	499.60	99.75	498.50	226.10	.005000
11996	D48353	10-31-89	K61	573.00	72.60	500.40	99.78	499.40	226.50	.006000
10879	D48368	10-31-89	K61	571.00	70.80	500.20	99.75	499.00	226.30	.005000
10560	D48403	10-31-89	K61	571.00	70.40	500.60	99.75	499.40	226.50	.050000
10028	D48395	10-31-89	K61	570.80	70.40	499.40	99.76	498.30	226.00	.060000
09997	D48591	10-31-89	K61	571.80	72.60	500.20	99.75	499.00	226.30	.004000
09421	D48420	10-31-89	K61	571.60	72.80	499.80	99.77	498.80	226.30	.003000
08929	D48405	10-31-89	K61	572.20	72.60	500.60	99.78	499.60	226.60	.050000
08063	D37114	10-31-89	K61	573.00	73.80	499.00	99.77	498.00	225.90	.040000
07447	D48421	10-31-89	K61	568.60	68.60	500.00	99.77	499.00	226.30	.003000
TOTAL	40 DRUMS					19943.60		19904.70	9028.20	
TOTAL SHIPMENTS				40 DRUMS		19943.60		19904.70	9028.20	

ACCOUNTABILITY

HEAVY WATER INFORMATION CONTROL SYSTEM
OFF-PLANT SHIPMENTS AND RECEIPTS

REPORT DATE 10-31-89

SHIPMENT LOT NO. K61

	DRUM NO	REF NO	DATE	LOT NO	GROSS WT	TARE WT	NET WT	MDL %	100% WT	100% KG	µCi/mL TRITIUM
2	18316	E43136	10-31-89	K61	571.20	71.00	500.20	99.75	499.20	226.40	.400000
	18268	E43212	10-31-89	K61	572.80	71.60	501.20	99.75	500.10	226.80	.420000
1	17643	D54182	10-31-89	K61	569.60	71.60	498.00	99.71	497.10	225.50	.050000
3	17511	D54183	10-31-89	K61	569.20	72.40	496.80	99.71	495.90	224.90	.050000
1	17504	E15758	10-31-89	K61	568.80	71.20	497.60	99.8	496.80	225.30	.040000
2	17502	E15504	10-31-89	K61	570.00	72.60	497.40	99.7	496.40	225.20	.040000
3	17488	E15729	10-31-89	K61	570.40	72.40	498.00	99.8	497.20	225.50	.040000
2	17474	E15739	10-31-89	K61	568.20	70.00	498.20	99.8	497.40	225.60	.040000
2	17464	D54146	10-31-89	K61	568.80	72.60	496.20	99.7	495.20	224.60	.100000
2	17455	D54192	10-31-89	K61	569.20	71.60	497.60	99.8	496.80	225.30	.050000
2	17431	D54152	10-31-89	K61	568.40	73.00	495.40	99.8	494.50	224.30	.080000
2	17429	E15757	10-31-89	K61	570.00	72.40	497.60	99.7	496.50	225.20	.040000
	17421	E15759	10-31-89	K61	570.20	72.60	497.60	99.7	496.50	225.20	.040000
2	17405	D54138	10-31-89	K61	569.40	72.40	497.00	99.8	496.20	225.10	.050000
1	17371	D54194	10-31-89	K61	567.20	70.00	497.20	99.8	496.30	225.10	.050000
1	17366	E15713	10-31-89	K61	568.40	70.40	498.00	99.81	497.20	225.50	.040000
	17337	E15714	10-31-89	K61	571.00	72.40	498.60	99.81	497.80	225.80	.040000
	17333	E15712	10-31-89	K61	569.20	72.00	497.20	99.82	496.40	225.20	.040000
1	17288	E15710	10-31-89	K61	567.00	69.40	497.60	99.82	496.80	225.30	.040000
2	17276	E15711	10-31-89	K61	567.20	69.80	497.40	99.82	496.60	225.30	.040000
2	17269	E15711	10-31-89	K61	567.40	69.80	497.60	99.80	496.70	225.30	.040000
	17259	E15712	10-31-89	K61	567.40	70.00	497.40	99.79	496.50	225.20	.040000
	17188	D54115	10-31-89	K61	567.40	71.40	496.00	99.81	495.20	224.60	.080000
3	17143	D54171	10-31-89	K61	568.40	71.20	497.20	99.79	496.30	225.10	.050000
	16006	D48567	10-31-89	K61	573.00	72.20	500.80	99.75	499.60	226.60	.005000
3	13817	D48552	10-31-89	K61	571.80	71.40	500.40	99.75	499.20	226.40	.004000
3	13777	D48554	10-31-89	K61	572.20	71.60	500.60	99.75	499.40	226.50	.004000
1	13255	D48423	10-31-89	K61	571.40	71.40	500.00	99.78	499.00	226.30	.003000
1	12737	D48421	10-31-89	K61	569.60	69.80	499.80	99.78	498.80	226.30	.003000
1	12694	D48512	10-31-89	K61	570.00	70.80	499.20	99.78	498.20	226.00	.050000
3	12088	D48569	10-31-89	K61	571.80	72.20	499.60	99.75	498.50	226.10	.005000
3	11996	D48553	10-31-89	K61	573.00	72.60	500.40	99.78	499.40	226.50	.006000
1	10879	D48568	10-31-89	K61	571.00	70.80	500.20	99.75	499.00	226.30	.005000
3	10560	D48603	10-31-89	K61	571.00	71.40	500.60	99.75	499.40	226.50	.050000
	10028	D48595	10-31-89	K61	570.80	71.40	499.40	99.76	498.30	226.00	.060000
	09997	D48591	10-31-89	K61	571.80	72.60	500.20	99.75	499.00	226.30	.004000
3	09121	D48420	10-31-89	K61	571.60	72.80	499.80	99.77	498.80	226.30	.003000
3	08329	D48605	10-31-89	K61	572.20	72.60	500.60	99.78	499.60	226.60	.050000
1	08163	D37114	10-31-89	K61	573.00	73.80	499.00	99.77	498.00	225.90	.040000
	07447	D48421	10-31-89	K61	568.60	68.60	500.00	99.77	499.00	226.30	.003000
TOTAL		40 DRUMS					19943.60		19904.70	9028.20	
TOTAL SHIPMENTS							19943.60		19904.70	9028.20	

maps for lab analysis

(SRO's analysis)

Drum #	μCi/L
18316	400
18268	420
17643	50
17511	50
17504	40
17502	40
17488	40
17474	40
17464	100
17455	50
17431	80
17429	40
17421	40
17403	50
17371	50
17366	40
17337	40
17333	40
17288	40
17276	40
17269	40
17259	40
17188	80
17143	50
14006	5
13817	4
13777	4
13255	3
12737	3
12694	50

Drum #	μCi/L
12088	5
11996	6
10879	5
10560	50
10028	60
09997	4
09421	3
08929	50
08063	40
07447	3

$n = 40$

$\bar{x} = 54.8750$

$S_x = 85.8508$

$\sigma_x = 84.7709$

$\Sigma x_i = 2195$

$\Sigma x_i^2 = 407,895$

range = 417

mode = 40

Robert SLOAN —

Be prepared TO START SAMPLING The ATTACHED LIST OF HEAVY WATER drums MONDAY —

Bill

ODZA-01-0370
ODZA-02-0370

Page 1 of 2

Shipment # 91 10-31-89

Batch #	drum #	Net	Loaded × 4.9750 D2O Element	Net ÷ 4.954741277955 D2 ~~Qty~~	used
1554-91-0865 X	08063-1	226,395	225,955	45,418	
0866 X	17371-1	225,488	225,049	45,236	
0867 X	17366-1	225,851	225,407	45,308	
0868 X	12737-1	226,667	226,223	45,472	
0869 X	10879-1	226,848	226,402	45,508	
0870 X	12694-1	227,394	226,950	45,618	
0871 X	17504-1	225,669	225,228	45,272	
0872 X	17288-1	225,669	225,228	45,272	
0873 X	13255-1	226,757	226,313	45,490	
[redacted]	[redacted]	225,850	225,407	45,308	
0875 X	17276-2	225,579	225,139	45,254	
0876 X	17502-2	225,578	225,139	45,254	
0877 X	17431-2	224,671	224,269	45,072	
0878 X	17429-2	225,669	225,228	45,272	
0879 X	17406-2	225,397	224,955	45,217	
0880 X	18316-2	226,848	226,402	45,508	
0881 X	17269-2	225,669	225,228	45,272	
0882 X	17474-2	225,941	225,502	45,327	
0883 X	17464-2	225,034	224,629	45,145	
[redacted]	[redacted]	225,669	225,228	45,272	706,495
0885 X	17488-3	225,851	225,407	45,308	
0886 X	17143-3	225,488	225,049	45,236	
0887 X	12088-3	226,576	226,134	45,454	
0888 X	10560-3	227,030	226,586	45,545	
0889 X	13777-3	227,029	226,586	45,545	
0890 X	17511-3	225,307	224,865	45,199	
0891 X	13817-3	226,939	226,497	45,527	
0892 X	11996-3	226,939	226,497	45,527	
0893 X	08929-3	227,029	226,586	45,545	
[redacted]	[redacted]	226,667	226,223	45,472	
0895 X	09997-4	226,848	226,402	45,508	
0896 X	17259-4	225,578	225,139	45,254	
0897 X	17337-4	226,123	225,681	45,363	

UCN-3889A DATA SHEET

10-31-89

Shipment #91

Batch #	drum #	Net	Element	Isotope	Used
6554-91-0898 X	17333-4	225,488	225,049	45,236	
0899 X	10028-4	226,485	226,044	45,436	
0900 X	14006-4	227,120	226,676	45,563	
0901 X	18268-4	227,301	226,855	45,599	
0902 X	07447-4	226,757	226,313	45,490	
0903 X	17421-4	225,669	225,228	45,272	
0904 X	17188-4 4527,167	224,943	224,502	45,126	308,705
		9,045,810	9,028,200	1,814,700	

Enhanced Sniffer, is equipped with a dual chamber and deionizer. The deionizer removes all ions formed by any agency outside the chamber and makes the instrument insensitive to flow rate. The dual chamber renders the Model 120 relatively insensitive to γ rays, thus making the instrument truly a tritium detector (or at least a radioactive-vapor or airborne-particle detector). After an initial calibration to tritium, the Model 120 can be recalibrated routinely with γ rays.

A more reliable continuous monitoring device utilizing a vibrating reed electrometer and a recorder to measure the current from an ion chamber is used in enclosed areas where tritium is a constant hazard. The time lag between tritium sensing and alarm must be recognized in this instrument.

C. Maximum Permissible Concentration

The MPC value for tritium (as HTO or T_2O) for a 40-hr week is 5.1 $\mu c/M^3$ (1.1×10^7 d/m-M^3). These concentrations are based on a weekly permissible exposure of 0.1 rem/wk because tritium has as a critical organ the body water, and the major portion of the body is limited to 5 rem/yr (about 0.1 rem/wk). LASL operations are such that it is more convenient to handle tritium exposures on a 0.3 rem/wk basis, and the MPC values above may be tripled. A limit of 5 rem/yr is still maintained for tritium. The MPC in air is determined assuming equal skin and lung absorption, which means the value of MPC may be only doubled when utilizing supplied air devices. According to Pinson and Langham (*J. Appl. Physiol. 10*, 1, 1957, p. 108) the amount of tritium maintained in the body that will deliver 0.3 rem/wk to the body is 3.7 mc. The

15. TRITIUM MONITORING

A. Characteristics

Tritium, or H^3, is the only known radioactive isotope of hydrogen. It emits a β of 18 kev maximum energy (about 6 kev average) and has a radioactive half-life of 12.26 yr. Undiluted tritium gas (T_2) has an activity of 2.6 curies/cc STP or 9.8×10^3 curies/g. Pure tritiated water (T_2O) has an activity of about 2700 curies/g.

B. Detection

Because of the extremely low energy or penetrating power of the β particles from tritium, ordinary β-sensitive devices are not suitable for tritium monitoring, since the particle cannot penetrate to the sensitive volume of the chamber. Instruments allowing the tritium gas or T_2O vapor to flow inside the counter chamber are utilized. A portable instrument of such design is the Tritium Sniffer (see Fig. 1) which sounds an alarm when a preset number of ions per unit time (of any origin) are measured. Although a calibration has been performed on the Sniffer (Report LA-1683) and permissible times have been assigned to each scale, the meter must be used primarily as a qualitative detector because the chamber also responds to ions in the air formed by means other than tritium (e.g., heat, smoke, or γ rays). Sensitivity also depends on the sampling rate, the average ion concentration in the sampled area, and the location of the meter with respect to the source.

A new tritium monitoring instrument, Model 120

12-day elimination half-life is assumed for air exposures less than 124 $\mu c/L$ concentration. When this level is exceeded, the actual elimination half-life is determined, and appropriate corrections are made in the dose calculations. An acute dose resulting in 124 $\mu c/L$ in the body fluids (including urine) will expose the person receiving it to 0.6 rem in the first 2 weeks following the exposure, and until completely eliminated (assuming a 12-day elimination half-life) 1.08 rem to the whole body. Such tritium exposures are totaled along with any additional radiation exposures (such as X ray, γ, neutron, etc.) that the person receives.

E. Precautions

Precautions to be taken when working with tritium or tritium-contaminated materials include the wearing of rubber gloves, the use of negative-pressure dry boxes, hoods with linear flow at least 100 ft/min, and/or the wearing of supplied air equipment. Rubber gloves should be worn and changed frequently, since tritium water vapor passes through the rubber in hours or less. The use of thin rubber gloves in addition to the installed dry box gloves is desirable. All equipment which has come in contact with tritium, either gas or T_2O vapor, will retain some tritium and should be considered contaminated. Stopcock grease, vacuum pump oil, and plastics are readily contaminated, whereas materials such as glass or stainless steel retain smaller quantities. Under ordinary use, the Sniffer is seldom contaminated. Under conditions where the monitored tritium has passed through a vacuum pump, oil contaminated with tritium may be deposited on the inside Sniffer chamber walls. At ordinary room temperatures,

effect. . half-life in the body is about 12 days a an be shortened considerably by increasing the daily intake of fluids. With 3.7 mc in the body, urine assay will show 85 $\mu c/L$. Calculations (Report LA-1469) show that only one breath of T_2O saturated air will result in a lethal dose, if no attempt to increase water turnover is made.

D. Urine Assay

The only means of measuring a person's actual tritium exposure is by urine analysis. It is therefore imperative that persons working with tritium or tritium-contaminated materials submit routine urine samples, the frequency of sampling being determined by the amount of tritium handled and the working conditions. In case of accident or where instruments indicate a possible high exposure, a urine specimen should be collected immediately and a second specimen of at least 10 cc as soon as possible after the first voiding, since the first sample may be diluted by urine in the bladder at the time of exposure. Group H-5 will at any time run an emergency analysis within 2 hr. An emergency urine assay kit, located in the Decontamination Laboratory, CM Building, is available for use by the monitor when an immediate rough estimate is needed. The procedure is rather insensitive but simple and can be performed in less than half an hour. In certain cases the Medical Group may prescribe an accelerated intake of fluids. Unless otherwise prescribed by the physician, intake should be limited to 1 pt/hr for 10 hr or no more than 5 qt/day. Tritium urine analyses are evaluated in terms of whole-body rem exposure by Group H-1 (Report LA-2163). A

Gloves: Is there a chance of skin absc ion?

(5) Urine samples: Are sample containers available? Instructions for sampling.

(6) Contamination: Allowable contamination. How to package waste.

(7) Location of emergency urine assay equipment and how to operate it.

See also Beta Particles, Appendix C-2; Decontamination, Section 8.

H. Interpretation of Sniffer Measurements

The permissible time per week given in the tabulation below is based on 15.3 $\mu c/M^3$ (concentration to give 0.3 rem/40-hr wk) and the assumption that the entire tritium contaminant is in the form of water vapor (HTO or T_2O), and not as gaseous tritium (HT or T_2). If the tritium encountered is in the form of a gas and not the oxide, urine analyses for tritium will not be as high as Sniffer readings would have predicted, owing to the lower biological response to the gas than the oxide. Since the proportion of tritium that is in the form of the oxide cannot be determined in the field, the "safe" assumption that only the oxide is measured must be made. Measurements are to be made of general area or room activity to give a picture of breathing concentration rather than local contamination.

Scale No.	$\mu c/M^3$ full scale	Permissible time/wk	Permissible time/wk with supplied air
5	2×10^2	~3 hr.	~6 hr.
4	1×10^3	~40 min.	~1 hr 10 min.
3	1×10^4	~4 min.	~7 min.
2	1×10^5	Do not remain.	Do not remain.
1	*1×10^6	Do not remain.	Do not remain.

*Model 120 only.

the dif.usion of tritium through glass or stainless el or from T-Zr accelerator targets is negligible. However, at elevated temperatures and pressures there is appreciable diffusion of tritium through stainless steel. Tritium losses from targets may result from heating or by an exchange mechanism when in contact with ordinary hydrogen. Such targets must always be handled with rubber gloves, as quantities up to several curies per cm^2 of target surface may be adsorbed on the target.

F. Tritium-Contaminated Vacuum Pumps

Tritium contamination is so often associated with vacuum pumps that special precautions are observed. The present policy concerning tritium-contaminated pumps is: (1) Pumps or other equipment which have been exposed to tritium are not allowed to leave the project without H-1 Group Office approval; (2) pumps reading one-half No. 4 scale at "contact" with the Sniffer may be repaired by the users without a hood but with rubber gloves and urine sampling; (3) pumps more severely contaminated must be decontaminated or repaired in a hood under H-1 supervision. Oil and mercury associated with the pumps should be carefully checked; remember that most of the activity will not be detected owing to the very short β-particle range.

G. Tritium Monitoring Check List

(1) Ventilation: Do hoods have proper flow?

(2) Air: Is supplied air advisable?

(3) Instruments: Are they working? What do readings indicate on the Sniffer? On the vibrating reed electrometer? Are γ rays interfering?

RA025-02

Y-12 PLANT LABORATORY REPORT

RECEIVED	REPORT DATE	TYPE REPORT	BATCH-NUMBER	LOC	MTC	REQUISITION
09-08-88	10-28-88	FINAL	0060-HI-9001		0060	631641

CHEMICAL ANALYSIS

.200000	G/G	D
.995000	G/G	D2O

PHYSICAL PROPERTIES

27.00	MCI/L	TRITIUM (MICROCURIE/L)
99.4500	ATOM %	D
4.5000	LOG	PH

RA025-02

Y-12 PLANT LABORATORY REPORT

RECEIVED	REPORT DATE	TYPE REPORT	BATCH-NUMBER	LOC	MTC	REQUISITION
09-08-88	10-28-88	FINAL	0060-HI-9003		0060	631643

CHEMICAL ANALYSIS

.200000	G/G	D
.995000	G/G	D2O

PHYSICAL PROPERTIES

21.00	MCI/L	TRITIUM (MICROCURIE/L)
99.4500	ATOM %	D
4.5000	LOG	PH

RA025-02

Y-12 PLANT LABORATORY REPORT

RECEIVED	REPORT DATE	YPE REPORT	BATCH-NUMBER	C	MTC	REQUISITION
09-08-88	10-28-88	FINAL	0060-HI-9005		0060	631645

CHEMICAL ANALYSIS

.200000	G/G	D
.994000	G/G	D20

PHYSICAL PROPERTIES

18.00	MCI/L	TRITIUM (MICROCURIE/L)
99.3300	ATOM %	D
4.6000	LOG	PH

RA025-02

Y-12 PLANT LABORATORY REPORT

RECEIVED	REPORT DATE	TYPE REPORT	BATCH-NUMBER	LOC	MTC	REQUISITION
09-08-88	10-28-88	FINAL	0060-HI-9007		0060	631647

CHEMICAL ANALYSIS

.200000	G/G	D
.994000	G/G	D20

PHYSICAL PROPERTIES

20.00	MCI/L	TRITIUM (MICROCURIE/L)
99.3400	ATOM %	D
5.0000	LOG	PH

RA025-02

Y-12 PLANT LABORATORY REPORT

RECEIVED	REPORT DATE	PE REPORT	BATCH-NUMBER	MTC	REQUISITION
09-08-88	10-28-88	FINAL	0060-HI-9009	0060	631649

CHEMICAL ANALYSIS

.200000	G/G	D
.994000	G/G	D20

PHYSICAL PROPERTIES

14.00	MCI/L	TRITIUM (MICROCURIE/L)
99.3500	ATOM %	D
4.8000	LOG	PH

RA025-02

Y-12 PLANT LABORATORY REPORT

RECEIVED	REPORT DATE	YPE REPORT	BATCH-NUMBER	C	MTC	REQUISITION
09-08-88	10-28-88	FINAL	0060-HI-9011		0060	631776

CHEMICAL ANALYSIS

.200000	G/G	D
.994000	G/G	D20

PHYSICAL PROPERTIES

50.00	MCI/L	TRITIUM (MICROCURIE/L)
99.3200	ATOM %	D
4.7000	LOG	PH

RA025-02

Y-12 PLANT LABORATORY REPORT

RECEIVED	REPORT DATE	TYPE REPORT	BATCH-NUMBER	MTC	REQUISITION
09-08-88	10-28-88	FINAL	0060-HI-9013	0060	631778

CHEMICAL ANALYSIS

.200000	G/G	D
.994000	G/G	D2O

PHYSICAL PROPERTIES

48.00	MCI/L	TRITIUM (MICROCURIE/L)
99.3400	ATOM %	D
4.8000	LOG	PH

RA025-02

Y-12 PLANT LABORATORY REPORT

RECEIVED	REPORT DATE	TYPE REPORT	BATCH-NUMBER	MTC	REQUISITION
09-08-88	10-28-88	FINAL	0060-HI-9015	0060	631780

CHEMICAL ANALYSIS

.200000	G/G	D
.996000	G/G	D2O

PHYSICAL PROPERTIES

30.00	MCI/L	TRITIUM (MICROCURIE/L)
99.5800	ATOM %	D
4.7000	LOG	PH

10 in process area

45 in storage area

BLDG 9805-1 GAS CYLINDER ~~PREFILL CHECK SHEET~~

DATE	~~CYLINDER~~ NO.	~~INSPECTION~~ DATE	~~CYLINDER CONDITION~~	OPERATOR
1	0601-00-6853	0601-00-8292	35	
2	7267	7741	36	
3	6286	5511	37	
4	7425	5497	38	
5	4968	7508	39	
6	5556	8615	40	
7	3074	7411	41	
8	5251	7261	42	
9	3100	0011	43	
10	7561	4446	44	
11	7588	1563	45	
12	6168			
13	4960			
14	5463			
15	5581			
16	5783			
17	4215			
18	4856			
19	5719			
20	4874			
21	6899			
22	5260			
23	7654			
24	6729			
25	7177			
26	7432			
27	7527			
28	8531			
29	5832			
30	5492			
31	5123			
32	7567			
33	3993			
34	~~[illegible]~~			

UCN-10020
(2 6-71)

Department of Energy
Savannah River Operations Office
P.O. Box A
Aiken, South Carolina 29802

Ms. Nancy Driver
U. S. Department of the Air Force
SA-ALC/SFSC
Kelly AFB, TX 78241-5000

Dear Ms. Driver:

U.S. DEPARTMENT OF ENERGY-SAVANNAH RIVER (DOE-SR) CONTRACT DE-AC09-90SR18115 FOR THE PURCHASE OF 25 METRIC TONS OF HEAVY WATER FROM CERN, SWITZERLAND FOR THE U.S. AIR FORCE (USAF); ANALYSIS OF 40 DRUMS SHIPPED DIRECTLY TO U.S. DEPARTMENT OF ENERGY-OAK RIDGE (DOE-OR)

The terms of subject contract stipulated that from a total of approximately 114 drums of heavy water purchased under the contract, 40 drums be shipped directly to DOE-OR for receipt, analysis and acceptance and that the remaining 74 drums be shipped to DOE-SR for receipt, analysis and acceptance on behalf of USAF.

As previously discussed among Peggy Jones and Sheila Arnett, DOE-OR; Selvin Rex, USAF; and David Williamson, DOE-SR; the heavy water which was shipped directly to DOE-OR is hereby judged to be within contract quality specifications and therefore acceptable to the receiving party and new owner; i.e., DOE-OR and USAF respectively. The determination of acceptability of the heavy water shipped directly to DOE-OR is based on the following:

1. Analysis results of the heavy water shipped to DOE-SR indicate that all 74 drums received are within contract quality specifications.

2. Average re-analysis results of a sampling of the drums shipped directly to DOE-OR indicate that the heavy water is within contract quality specifications.

It is understood that the most recent DOE-OR analysis was based on a sampling of ten drums. Seven of the samples were within contract specifications and three were not. It is felt that negative results were obtained on the three drums in question due to inappropriate handling of the heavy water during the analysis process. For this reason, further testing is not considered necessary. It should be noted that each heavy water sample is consumed during analysis. In the interest of preserving the heavy water for its intended purpose, the average results are judged to be adequately representative of the lot of 40 drums at DOE-OR in that positive results were obtained on 70 percent of the samples.

90 shipment

The weights and analyses are enclosed. Any questions from you or your staff may be directed to Mr. David Williamson at (803) 725-2230.

Sincerely,

ORIGINAL SIGNED BY
W. A. RICHARDSON

W. A. Richardson, Chief
Reactor Materials Branch
Manufacturing Division

Enclosures
1. USAF, SA-ALC Memo dated 02/14/91
2. WSRC Memo with Analyses of Heavy Water received at DOE-SR dated 10/22/90
3. Martin Marietta Memo with Heavy Water weights received at DOE-OR dated 02/06/91
4. Martin Marietta Memo with Analyses of Heavy Water received at DOE-OR dated 11/19/90

cc w encl:
Peggy Jones
Martin Marietta Energy Systems
Bear Creek Road
P O Box 2009
Bldg 9113, MS 8208
Oak Ridge, TN 37831

Sheila D. Arnett
Martin Marietta Energy Systems
Bear Creek Road
Bldg 9204-2, MS 8132
Oak Ridge, TN 37831

SA-ALC/SFSC
BLDG 1621
KELLY AFB, TX 78241-5000
OFFICE: (512) 925-4843
FAX: (512) 925-8048

DATE: 14 FEB 91

FACSIMILE COVER SHEET

PAGE 1 OF 1

FORWARD TO:

[redacted]

DEPARTMENT OF ENERGY
SAVANNAH RIVER SITE
(803) 725-2230

REMARKS:

THE LETTER DRAFT SUBMITTED VIA FACSIMILE 13 FEB 91 HAS BEEN REVIEWED AND APPROVED. PLEASE FORWARD FINAL FORM TO:

SA-ALC/SFSC
ATTN: MS. NANCY DRIVER
KELLY AFB TX 78241-5000

THANK YOU FOR YOUR ATTENTION AND SUPPORT REGARDING THIS MATTER.

SELVIN REX

Analytical Laboratories

WESTINGHOUSE SAVANNAH RIVER COMPANY

INTER-OFFICE MEMORANDUM

October 22, 1990

ESH-AL-901118

TO: D. B. BOWMAN, 704-D

MBHughes

FROM: M. B. HUGHES, 772-D
(X5-6950)

NON-TRITIATED HEAVY WATER FOR THE
U. S. DEPARTMENT OF THE AIR FORCE (U)

Ref: Contract No. DE-AC09-90SR18115, Purchase of Twenty-Five Metric Tons of U. S. Origin, Non-Tritiated Heavy Water for the U. S. Department of the Air Force Requirements

Attached is the analysis of the subject non-tritiated heavy water. The drum records which accompany the samples do not provide a sufficient number of spaces for complete analytical results. Therefore, the actual data is being submitted to you by cover of this letter. The attached data is the official analytical report for this special analysis and is referenced on the drum record.

We recommend changing the drum record format so that "less than" values can be entered. This would improve the accuracy of the drum record and eliminate the need for a secondary analytical data sheet.

MBH:slw

CC: W. R. Jacobsen, 772-3F, w/o Attachment
L. M. Chandler, 320-M, " "
K. W. Johns, 772-D

RESULTS FOR THE ANALYSIS OF
HEAVY WATER FOR THE US DEPARTMENT OF THE AIR FORCE

DRUM #	D2O MOL %	TURBIDITY ppm	CONDUCTIVITY µmho/cm	KMNO4 mg/kg	T3 uci/mL	pH	Cl- ppb
03409	99.91	< 1	0.6	1	$< 5x10^{-5}$	6.29	9
04263	99.86	< 1	0.5	1	$< 5x10^{-5}$	5.91	5
03407	99.89	< 1	0.5	1	$< 5x10^{-5}$	5.89	5
00072	99.89	< 1	0.4	1	$< 5x10^{-5}$	5.81	23
00082	99.90	< 1	0.5	1	$< 5x10^{-5}$	5.92	8
02399	99.87	< 1	0.4	1	$< 5x10^{-5}$	5.82	9
03404	99.88	< 1	0.4	1	$< 5x10^{-5}$	5.82	6
02751	99.84	< 1	1.0	1	$< 5x10^{-5}$	6.69	9
06480	99.86	< 1	1.1	1	$< 5x10^{-5}$	6.79	15
00017	99.89	< 1	1.2	1	$< 5x10^{-5}$	6.94	6
03714	99.82	< 1	1.3	1	$< 5x10^{-5}$	6.97	18
03127	99.87	< 1	1.4	1	$< 5x10^{-5}$	6.83	20
00059	99.86	< 1	1.4	1	$< 5x10^{-5}$	6.89	4
00087	99.90	< 1	1.4	1	$< 5x10^{-5}$	6.70	6
00069	99.87	< 1	1.3	1	$< 5x10^{-5}$	6.83	6
04171	99.89	< 1	1.3	1	$< 5x10^{-5}$	6.97	7
00019	99.92	< 1	1.7	1	$3x10^{-4}$	6.65	12
02018	99.92	< 1	1.5	1	$1x10^{-4}$	6.61	7
00045	99.89	< 1	1.7	1	$< 5x10^{-5}$	6.53	5
2729	99.89	< 1	1.4	1	$< 5x10^{-5}$	6.72	8
05432	99.88	< 1	1.4	< 1	$< 5x10^{-5}$	6.84	5
00073	99.90	< 1	1.5	< 1	$< 5x10^{-5}$	7.08	7
00034	99.90	< 1	1.4	< 1	$< 5x10^{-5}$	6.82	9
00013	99.88	< 1	1.4	< 1	$< 5x10^{-5}$	6.78	7
00037	99.86	< 1	1.3	< 1	$< 5x10^{-5}$	6.85	11
00067	99.88	< 1	1.5	< 1	$< 5x10^{-5}$	6.65	14

RESULTS FOR THE ANALYSIS OF
HEAVY WATER FOR THE US DEPARTMENT OF THE AIR FORCE

DRUM #	D2O MOL %	TURBIDITY ppm	CONDUCTIVITY µmho/cm	KMNO4 mg/kg	T3 uci/mL	pH	Cl- ppb
04436	99.89	<1	1.6	<1	$<5x10^{-5}$	6.46	6
00070	99.89	<1	1.3	<1	$<5x10^{-5}$	6.87	15
02662	99.90	<1	1.5	<1	$<5x10^{-5}$	6.90	9
04372	99.92	<1	1.4	<1	$<5x10^{-5}$	6.76	5
00036	99.89	<1	2.2	1	$<5x10^{-5}$	6.60	9
02316	99.84	<1	1.5	1	$<5x10^{-5}$	6.95	14
00076	99.88	<1	1.8	1	$<5x10^{-5}$	7.16	7
02236	99.88	<1	1.3	1	$<5x10^{-5}$	7.37	8
00090	99.89	<1	1.5	1	$<5x10^{-5}$	7.07	6
00041	99.85	<1	1.2	1	$<5x10^{-5}$	6.86	8
02122	99.89	<1	1.3	1	$<5x10^{-5}$	6.95	11
00046	99.88	<1	1.4	1	$<5x10^{-5}$	6.95	9
04486	99.88	<1	1.4	1	$<5x10^{-5}$	6.98	6
02001	99.91	<1	1.3	1	$<5x10^{-5}$	7.31	9
00068	99.90	<1	1.3	1	$3x10^{-4}$	7.27	46
00006	99.92	<1	1.3	1	$<5x10^{-5}$	7.33	6
02029	99.92	<1	1.4	1	$1x10^{-4}$	7.35	16
04433	99.90	<1	1.1	1	$<5x10^{-5}$	7.42	5
02111	99.91	<1	1.4	1	$3x10^{-4}$	7.42	10
00074	99.90	<1	1.4	1	$<5x10^{-5}$	7.42	7
04123	99.90	<1	1.3	1	$<5x10^{-5}$	7.42	21
04846	99.85	<1	1.9	<1	$<5x10^{-5}$	7.37	5
00050	99.85	<1	1.3	<1	$<5x10^{-5}$	7.28	7
00065	99.89	<1	1.3	<1	$<5x10^{-5}$	7.40	9
03083	99.92	<1	1.4	2	$<5x10^{-5}$	7.46	8
00012	99.88	<1	1.5	2	$<5x10^{-5}$	7.60	8

RESULTS FOR THE ANALYSIS OF
HEAVY WATER FOR THE US DEPARTMENT OF THE AIR FORCE

DRUM #	D2O MOL %	TURBIDITY ppm	CONDUCTIVITY µmho/cm	KMNO4 mg/kg	T3 uci/mL	pH	Cl- ppb
00093	99.90	<1	1.6	2	$<5x10^{-5}$	7.12	20
03794	99.91	<1	1.5	2	$<5x10^{-5}$	7.32	8
00098	99.85	<1	1.3	2	$<5x10^{-5}$	7.26	7
00066	99.89	<1	1.6	2	$<5x10^{-5}$	7.21	9
03587	99.87	<1	1.3	2	$<5x10^{-5}$	7.06	8
02672	99.88	<1	1.8	2	$<5x10^{-5}$	7.18	4
04198	99.88	<1	1.5	2	$<5x10^{-5}$	6.93	4
00002	99.87	<1	1.8	2	$<5x10^{-5}$	7.16	6
03469	99.87	<1	2.1	2	$<5x10^{-5}$	7.31	6
03402	99.87	<1	1.3	2	$<5x10^{-5}$	7.32	10
00048	99.86	<1	1.4	2	$<5x10^{-5}$	7.37	18
00051	99.88	<1	1.8	2	$<5x10^{-5}$	7.66	46
00001	99.88	<1	1.5	2	$<5x10^{-5}$	7.58	8
00086	99.87	<1	2.2	2	$<5x10^{-5}$	7.42	23
03487	99.86	<1	1.5	2	$<5x10^{-5}$	7.41	15
00071	99.84	<1	1.4	2	$<5x10^{-5}$	7.54	11
03658	99.86	<1	1.5	2	$<5x10^{-5}$	7.54	11
02168	99.86	<1	1.6	2	$<5x10^{-5}$	7.52	14
00027	99.90	<1	1.5	2	$<5x10^{-5}$	7.51	7
00010	99.89	<1	1.7	2	$<5x10^{-5}$	7.40	7
03540	99.87	<1	1.5	2	$<5x10^{-5}$	7.46	6
03568	99.87	<1	1.4	2	$<5x10^{-5}$	7.45	9

HEAVY WATER INFORMATION CONTROL SYSTEM
OFF-PLANT AND ON-PLANT UNANALYZED RECEIPTS

:COUNTABILITY

)RUM NO	REF NO	DATE	LOT NO	GROSS WT	TARE WT	NET WT	MOL %	100% WT	100% KG	REMARKS
)0001	E592531	10-08-90	896	564.60	79.20	485.40	99.87	484.80	219.90	~~PER SHIPPER~~
)0001	E592531	10-08-90	896	564.60	79.20	485.40	99.88	484.90	219.90	PER SRP
)0001	E592531			.00	.00	.00	.01	.10	.00	DIFFERENCE
)0002	E592131	10-08-90	896	564.80	79.40	485.40	99.87	484.80	219.90	~~PER SHIPPER~~
)0002	E592131	10-08-90	896	564.80	79.40	485.40	99.87	484.80	219.90	PER SRP
)0002	E592131			.00	.00	.00	.00	.00	.00	DIFFERENCE
0006	E592711	10-08-90	896	564.00	78.90	485.10	99.87	484.50	219.80	~~PER SHIPPER~~
0006	E592711	10-08-90	896	564.00	78.90	485.10	99.92	484.80	219.90	PER SRP
0006	E592711			.00	.00	.00	.05	.30	.10	DIFFERENCE
00'	E592041	10-08-90	896	563.80	78.30	485.50	99.87	484.90	219.90	~~PER SHIPPER~~
00.	E592041	10-08-90	896	563.80	78.30	485.50	99.89	485.00	220.00	PER SRP
)0010	E592041			.00	.00	.00	.02	.10	.10	DIFFERENCE
0012	E592701	10-08-90	896	563.40	77.60	485.80	99.87	485.20	220.10	~~PER SHIPPER~~
)0012	E592701	10-08-90	896	563.40	77.60	485.80	99.88	485.30	220.10	PER SRP
)0012	E592701			.00	.00	.00	.01	.10	.00	DIFFERENCE
)0013	E592591	10-08-90	896	563.80	78.30	485.50	99.87	484.90	219.90	~~PER SHIPPER~~
)0013	E592591	10-08-90	896	563.80	78.30	485.50	99.88	485.00	220.00	PER SRP
)0013	E592591			.00	.00	.00	.01	.10	.10	DIFFERENCE
)0017	E592681	10-08-90	896	563.00	77.60	485.40	99.87	484.80	219.90	~~PER SHIPPER~~
)0017	E592681	10-08-90	896	563.00	77.60	485.40	99.89	484.90	219.90	PER SRP
)0017	E592681			.00	.00	.00	.02	.10	.00	DIFFERENCE
)0019	E592061	10-08-90	896	564.60	78.90	485.70	99.87	485.10	220.00	~~PER SHIPPER~~
)0019	E592061	10-08-90	896	564.60	78.90	485.70	99.92	485.40	220.20	PER SRP
)0019	E592061			.00	.00	.00	.05	.30	.20	DIFFERENCE
)0027	E592051	10-08-90	896	564.20	78.70	485.50	99.87	484.90	219.90	~~PER SHIPPER~~
)0027	E592051	10-08-90	896	564.20	78.70	485.50	99.90	485.10	220.00	PER SRP
)002^	E592051			.00	.00	.00	.03	.20	.10	DIFFERENCE
)0034	E592401	10-08-90	896	563.80	78.30	485.50	99.87	484.90	219.90	~~PER SHIPPER~~
)0034	E592401	10-08-90	896	563.80	78.30	485.50	99.90	485.10	220.00	PER SRP
)0034	E592401			.00	.00	.00	.03	.20	.10	DIFFERENCE
)0036	E592431	10-08-90	896	563.80	78.10	485.70	99.87	485.10	220.00	~~PER SHIPPER~~
)0036	E592431	10-08-90	896	563.80	78.10	485.70	99.89	485.20	220.10	PER SRP
)0036	E592431			.00	.00	.00	.02	.10	.10	DIFFERENCE
)0037	E592261	10-08-90	896	563.60	78.10	485.50	99.87	484.90	219.90	~~PER SHIPPER~~
)0037	E592261	10-08-90	896	563.60	78.10	485.50	99.86	484.90	219.90	PER SRP
)0037	E592261			.00	.00	.00	.01-	.00	.00	DIFFERENCE

HEAVY WATER INFORMATION CONTROL SYSTEM
OFF-PLANT AND ON-PLANT UNANALYZED RECEIPTS

CCOUNTABILITY

DRUM NO	REF NO	DATE	LOT NO	GROSS WT	TARE WT	NET WT	MOL %	100% WT	100% KG	REMARKS
00041	E592501	10-08-90	896	563.00	77.40	485.60	99.87	485.00	220.00	~~PER SHIPPER~~
00041	E592501	10-08-90	896	563.00	77.40	485.60	99.85	485.00	220.00	PER SRP
00041	E592501			.00	.00	.00	.02-	.00	.00	DIFFERENCE
00045	E592561	10-08-90	896	564.00	78.50	485.50	99.87	484.90	219.90	~~PER SHIPPER~~
00045	E592561	10-08-90	896	564.00	78.50	485.50	99.89	485.00	220.00	PER SRP
00045	E592561			.00	.00	.00	.02	.10	.10	DIFFERENCE
00046	E592171	10-08-90	896	563.80	78.10	485.70	99.87	485.10	220.00	~~PER SHIPPER~~
00046	E592171	10-08-90	896	563.80	78.10	485.70	99.88	485.20	220.10	PER SRP
00046	E592171			.00	.00	.00	.01	.10	.10	DIFFERENCE
00[illegible]	E592691	10-08-90	896	563.80	78.30	485.50	99.87	484.90	219.90	~~PER SHIPPER~~
000[illegible]	E592691	10-08-90	896	563.80	78.30	485.50	99.86	484.90	219.90	PER SRP
00048	E592691			.00	.00	.00	.01-	.00	.00	DIFFERENCE
00050	E592271	10-08-90	896	563.40	78.30	485.10	99.87	484.50	219.80	~~PER SHIPPER~~
00050	E592271	10-08-90	896	563.40	78.30	485.10	99.85	484.50	219.80	PER SRP
00050	E592271			.00	.00	.00	.02-	.00	.00	DIFFERENCE
00051	E592121	10-08-90	896	563.60	78.30	485.30	99.87	484.70	219.90	~~PER SHIPPER~~
00051	E592121	10-08-90	896	563.60	78.30	485.30	99.88	484.80	219.90	PER SRP
00051	E592121			.00	.00	.00	.01	.10	.00	DIFFERENCE
00059	E592651	10-08-90	896	564.20	78.50	485.70	99.87	485.10	220.00	~~PER SHIPPER~~
00059	E592651	10-08-90	896	564.20	78.50	485.70	99.86	485.10	220.00	PER SRP
00059	E592651			.00	.00	.00	.01-	.00	.00	DIFFERENCE
00065	E592421	10-08-90	896	563.80	78.30	485.50	99.87	484.90	219.90	~~PER SHIPPER~~
00065	E592421	10-08-90	896	563.80	78.30	485.50	99.89	485.00	220.00	PER SRP
00065	E592421			.00	.00	.00	.02	.10	.10	DIFFERENCE
00066	E592641	10-08-90	896	564.80	79.40	485.40	99.87	484.80	219.90	~~PER SHIPPER~~
00066	E592641	10-08-90	896	564.80	79.40	485.40	99.89	484.90	219.90	PER SRP
000[illegible]	E592641			.00	.00	.00	.02	.10	.00	DIFFERENCE
000[illegible]	E592581	10-08-90	896	564.40	79.20	485.20	99.87	484.60	219.80	~~PER SHIPPER~~
00067	E592581	10-08-90	896	564.40	79.20	485.20	99.88	484.70	219.90	PER SRP
00067	E592581			.00	.00	.00	.01	.10	.10	DIFFERENCE
00068	E592161	10-08-90	896	327.60	79.40	248.20	99.87	247.90	112.40	~~PER SHIPPER~~
00068	E592161	10-08-90	896	327.60	79.40	248.20	99.90	248.00	112.50	PER SRP
00068	E592161			.00	.00	.00	.03	.10	.10	DIFFERENCE
00069	E592231	10-08-90	896	563.80	78.30	485.50	99.87	484.90	219.90	~~PER SHIPPER~~
00069	E592231	10-08-90	896	563.80	78.30	485.50	99.87	484.90	219.90	PER SRP
00069	E592231			.00	.00	.00	.00	.00	.00	DIFFERENCE

HEAVY WATER INFORMATION CONTROL SYSTEM
OFF-PLANT AND ON-PLANT UNANALYZED RECEIPTS

COUNTABILITY

RUM NO	REF NO	DATE	LOT NO	GROSS WT	TARE WT	NET WT	MOL %	100% WT	100% KG	REMARKS
0070	E592521	10-08-90	896	564.60	79.20	485.40	99.87	484.80	219.90	~~PER SHIPPER~~
0070	E592521	10-08-90	896	564.60	79.20	485.40	99.89	484.90	219.90	PER SRP
0070	E592521			.00	.00	.00	.02	.10	.00	DIFFERENCE
0071	E592071	10-08-90	896	564.40	78.70	485.70	99.87	485.10	220.00	~~PER SHIPPER~~
0071	E592071	10-08-90	896	564.40	78.70	485.70	99.84	485.00	220.00	PER SRP
0071	E592071			.00	.00	.00	.03-	.10-	.00	DIFFERENCE
0072	E592211	10-08-90	896	563.80	78.30	485.50	99.87	484.90	219.90	~~PER SHIPPER~~
0072	E592211	10-08-90	896	563.80	78.30	485.50	99.89	485.00	220.00	PER SRP
0072	E592211			.00	.00	.00	.02	.10	.10	DIFFERENCE
007	E592571	10-08-90	896	564.80	78.90	485.90	99.87	485.30	220.10	~~PER SHIPPER~~
007	E592571	10-08-90	896	564.80	78.90	485.90	99.90	485.50	220.20	PER SRP
0073	E592571			.00	.00	.00	.03	.20	.10	DIFFERENCE
0074	E592411	10-08-90	896	564.00	78.50	485.50	99.87	484.90	219.90	~~PER SHIPPER~~
0074	E592411	10-08-90	896	564.00	78.50	485.50	99.90	485.10	220.00	PER SRP
0074	E592411			.00	.00	.00	.03	.20	.10	DIFFERENCE
0076	E592031	10-08-90	896	563.60	78.30	485.30	99.87	484.70	219.90	~~PER SHIPPER~~
0076	E592031	10-08-90	896	563.60	78.30	485.30	99.88	484.80	219.90	PER SRP
0076	E592031			.00	.00	.00	.01	.10	.00	DIFFERENCE
0082	E592201	10-08-90	896	564.20	78.50	485.70	99.87	485.10	220.00	~~PER SHIPPER~~
0082	E592201	10-08-90	896	564.20	78.50	485.70	99.90	485.30	220.10	PER SRP
0082	E592201			.00	.00	.00	.03	.20	.10	DIFFERENCE
0086	E592511	10-08-90	896	563.40	78.10	485.30	99.87	484.70	219.90	~~PER SHIPPER~~
0086	E592511	10-08-90	896	563.40	78.10	485.30	99.87	484.70	219.90	PER SRP
0086	E592511			.00	.00	.00	.00	.00	.00	DIFFERENCE
0087	E592301	10-08-90	896	563.40	77.60	485.80	99.87	485.20	220.10	~~PER SHIPPER~~
0087	E592301	10-08-90	896	563.40	77.60	485.80	99.88	485.30	220.10	PER SRP
0087	E592301			.00	.00	.00	.01	.10	.00	DIFFERENCE
0090	E592021	10-08-90	896	563.60	78.10	485.50	99.87	484.90	219.90	~~PER SHIPPER~~
0090	E592021	10-08-90	896	563.60	78.10	485.50	99.89	485.00	220.00	PER SRP
0090	E592021			.00	.00	.00	.02	.10	.10	DIFFERENCE
0093	E592221	10-08-90	896	563.60	77.80	485.80	99.87	485.20	220.10	~~PER SHIPPER~~
0093	E592221	10-08-90	896	563.60	77.80	485.80	99.90	485.40	220.20	PER SRP
0093	E592221			.00	.00	.00	.03	.20	.10	DIFFERENCE
0098	E592311	10-08-90	896	564.00	78.30	485.70	99.87	485.10	220.00	~~PER SHIPPER~~
0098	E592311	10-08-90	896	564.00	78.30	485.70	99.85	485.10	220.00	PER SRP
0098	E592311			.00	.00	.00	.02-	.00	.00	DIFFERENCE

HEAVY WATER INFORMATION CONTROL SYSTEM
OFF-PLANT AND ON-PLANT UNANALYZED RECEIPTS

:COUNTABILITY

)RUM NO	REF NO	DATE	LOT NO	GROSS WT	TARE WT	NET WT	MOL %	100% WT	100% KG	REMARKS
)2001	E592151	10-08-90	896	559.80	74.10	485.70	99.87	485.10	220.00	~~PER SHIPPER~~
)2001	E592151	10-08-90	896	559.80	74.10	485.70	99.91	485.30	220.10	PER SRP
)2001	E592151			.00	.00	.00	.04	.20	.10	DIFFERENCE
)2018	E592281	10-08-90	896	561.60	76.10	485.50	99.87	484.90	219.90	~~PER SHIPPER~~
)2018	E592281	10-08-90	896	561.60	76.10	485.50	99.92	485.20	220.10	PER SRP
)2018	E592281			.00	.00	.00	.05	.30	.20	DIFFERENCE
)2029	E592461	10-08-90	896	555.80	70.10	485.70	99.87	485.10	220.00	~~PER SHIPPER~~
)2029	E592461	10-08-90	896	555.80	70.10	485.70	99.92	485.40	220.20	PER SRP
)2029	E592461			.00	.00	.00	.05	.30	.20	DIFFERENCE
)21	E592381	10-08-90	896	561.60	76.10	485.50	99.87	484.90	219.90	~~PER SHIPPER~~
)21	E592381	10-08-90	896	561.60	76.10	485.50	99.91	485.10	220.00	PER SRP
)2111	E592381			.00	.00	.00	.04	.20	.10	DIFFERENCE
)2122	E592391	10-08-90	896	560.60	75.20	485.40	99.87	484.80	219.90	~~PER SHIPPER~~
)2122	E592391	10-08-90	896	560.60	75.20	485.40	99.89	484.90	219.90	PER SRP
)2122	E592391			.00	.00	.00	.02	.10	.00	DIFFERENCE
)2168	E592091	10-08-90	896	560.60	75.20	485.40	99.87	484.80	219.90	~~PER SHIPPER~~
)2168	E592091	10-08-90	896	560.60	75.20	485.40	99.86	484.80	219.90	PER SRP
)2168	E592091			.00	.00	.00	.01-	.00	.00	DIFFERENCE
)2236	E592601	10-08-90	896	559.40	74.10	485.30	99.87	484.70	219.90	~~PER SHIPPER~~
)2236	E592601	10-08-90	896	559.40	74.10	485.30	99.88	484.80	219.90	PER SRP
)2236	E592601			.00	.00	.00	.01	.10	.00	DIFFERENCE
)2316	E592361	10-08-90	896	562.80	77.20	485.60	99.87	485.00	220.00	~~PER SHIPPER~~
)2316	E592361	10-08-90	896	562.80	77.20	485.60	99.84	484.90	219.90	PER SRP
)2316	E592361			.00	.00	.00	.03-	.10-	.10-	DIFFERENCE
)2399	E592251	10-08-90	896	555.40	70.10	485.30	99.87	484.70	219.90	~~PER SHIPPER~~
)2399	E592251	10-08-90	896	555.40	70.10	485.30	99.87	484.70	219.90	PER SRP
)23	E592251			.00	.00	.00	.00	.00	.00	DIFFERENCE
)2662	E592741	10-08-90	896	560.80	75.20	485.60	99.87	485.00	220.00	~~PER SHIPPER~~
)2662	E592741	10-08-90	896	560.80	75.20	485.60	99.90	485.20	220.10	PER SRP
)2662	E592741			.00	.00	.00	.03	.20	.10	DIFFERENCE
)2672	E592751	10-08-90	896	560.80	75.20	485.60	99.87	485.00	220.00	~~PER SHIPPER~~
)2672	E592751	10-08-90	896	560.80	75.20	485.60	99.88	485.10	220.00	PER SRP
)2672	E592751			.00	.00	.00	.01	.10	.00	DIFFERENCE
)2729	E592321	10-08-90	896	561.80	76.10	485.70	99.87	485.10	220.00	~~PER SHIPPER~~
)2729	E592321	10-08-90	896	561.80	76.10	485.70	99.89	485.20	220.10	PER SRP
)2729	E592321			.00	.00	.00	.02	.10	.10	DIFFERENCE

HEAVY WATER INFORMATION CONTROL SYSTEM
OFF-PLANT AND ON-PLANT UNANALYZED RECEIPTS

:COUNTABILITY

REPORT DATE QOH-

)RUM NO	REF NO	DATE	LOT NO	GROSS WT	TARE WT	NET WT	MOL %	100% WT	100% KG	REMARKS
)2751	E592661	10-08-90	896	559.40	74.10	485.30	99.87	484.70	219.90	~~PER SHIPPER~~
)2751	E592661	10-08-90	896	559.40	74.10	485.30	99.84	484.60	219.80	PER SRP
)2751	E592661			.00	.00	.00	.03-	.10-	.10-	DIFFERENCE
)3083	E592611	10-08-90	896	566.80	81.10	485.70	99.87	485.10	220.00	~~PER SHIPPER~~
)3083	E592611	10-08-90	896	566.80	81.10	485.70	99.92	485.40	220.20	PER SRP
)3083	E592611			.00	.00	.00	.05	.30	.20	DIFFERENCE
)3127	E592731	10-08-90	896	560.80	75.20	485.60	99.87	485.00	220.00	~~PER SHIPPER~~
)3127	E592731	10-08-90	896	560.80	75.20	485.60	99.87	485.00	220.00	PER SRP
)3127	E592731			.00	.00	.00	.00	.00	.00	DIFFERENCE
)34[illegible]	E592331	10-08-90	896	562.60	77.20	485.40	99.87	484.80	219.90	~~PER SHIPPER~~
)34[illegible]	E592331	10-08-90	896	562.60	77.20	485.40	99.87	484.80	219.90	PER SRP
)3402	E592331			.00	.00	.00	.00	.00	.00	DIFFERENCE
)3404	E592621	10-08-90	896	563.80	78.10	485.70	99.87	485.10	220.00	~~PER SHIPPER~~
)3404	E592621	10-08-90	896	563.80	78.10	485.70	99.86	485.10	220.00	PER SRP
)3404	E592621			.00	.00	.00	.01-	.00	.00	DIFFERENCE
)3407	E592111	10-08-90	896	560.60	75.20	485.40	99.87	484.80	219.90	~~PER SHIPPER~~
)3407	E592111	10-08-90	896	560.60	75.20	485.40	99.89	484.90	219.90	PER SRP
)3407	E592111			.00	.00	.00	.02	.10	.00	DIFFERENCE
)3409	E592181	10-08-90	896	561.60	76.10	485.50	99.87	484.90	219.90	~~PER SHIPPER~~
)3409	E592181	10-08-90	896	561.60	76.10	485.50	99.91	485.10	220.00	PER SRP
)3409	E592181			.00	.00	.00	.04	.20	.10	DIFFERENCE
)3469	E592451	10-08-90	896	561.60	76.10	485.50	99.87	484.90	219.90	~~PER SHIPPER~~
)3469	E592451	10-08-90	896	561.60	76.10	485.50	99.87	484.90	219.90	PER SRP
)3469	E592451			.00	.00	.00	.00	.00	.00	DIFFERENCE
)3487	E592721	10-08-90	896	560.80	75.20	485.60	99.87	485.00	220.00	~~PER SHIPPER~~
)3487	E592721	10-08-90	896	560.80	75.20	485.60	99.86	485.00	220.00	PER SRP
)348[illegible]	E592721			.00	.00	.00	.01-	.00	.00	DIFFERENCE
)354[illegible]	E592341	10-08-90	896	565.40	80.00	485.40	99.87	484.80	219.90	~~PER SHIPPER~~
)3540	E592341	10-08-90	896	565.40	80.00	485.40	99.87	484.80	219.90	PER SRP
)3540	E592341			.00	.00	.00	.00	.00	.00	DIFFERENCE
)3568	E592441	10-08-90	896	560.60	75.20	485.40	99.87	484.80	219.90	~~PER SHIPPER~~
)3568	E592441	10-08-90	896	560.60	75.20	485.40	99.87	484.80	219.90	PER SRP
)3568	E592441			.00	.00	.00	.00	.00	.00	DIFFERENCE
)3587	E592631	10-08-90	896	561.80	76.10	485.70	99.87	485.10	220.00	~~PER SHIPPER~~
)3587	E592631	10-08-90	896	561.80	76.10	485.70	99.87	485.10	220.00	PER SRP
)3587	E592631			.00	.00	.00	.00	.00	.00	DIFFERENCE

HEAVY WATER INFORMATION CONTROL SYSTEM
OFF-PLANT AND ON-PLANT UNANALYZED RECEIPTS

:COUNTABILITY

DRUM NO	REF NO	DATE	LOT NO	GROSS WT	TARE WT	NET WT	MOL %	100% WT	100% KG	REMARKS
)3658	E592351	10-08-90	896	565.60	80.00	485.60	99.87	485.00	220.00	~~PER SHIPPER~~
)3658	E592351	10-08-90	896	565.60	80.00	485.60	99.86	485.00	220.00	PER SRP
)3658	E592351			.00	.00	.00	.01-	.00	.00	DIFFERENCE
)3714	E592551	10-08-90	896	563.60	78.10	485.50	99.87	484.90	219.90	~~PER SHIPPER~~
)3714	E592551	10-08-90	896	563.60	78.10	485.50	99.82	484.70	219.90	PER SRP
)3714	E592551			.00	.00	.00	.05-	.20-	.00	DIFFERENCE
)3794	E592081	10-08-90	896	561.60	76.10	485.50	99.87	484.90	219.90	~~PER SHIPPER~~
)3794	E592081	10-08-90	896	561.60	76.10	485.50	99.91	485.10	220.00	PER SRP
)3794	E592081			.00	.00	.00	.04	.20	.10	DIFFERENCE
)41[illegible]	E592491	10-08-90	896	568.80	83.10	485.70	99.87	485.10	220.00	~~PER SHIPPER~~
)41	E592491	10-08-90	896	568.80	83.10	485.70	99.90	485.30	220.10	PER SRP
)4125	E592491			.00	.00	.00	.03	.20	.10	DIFFERENCE
)4171	E592241	10-08-90	896	568.00	81.80	486.20	99.87	485.60	220.30	~~PER SHIPPER~~
)4171	E592241	10-08-90	896	568.00	81.80	486.20	99.89	485.70	220.30	PER SRP
)4171	E592241			.00	.00	.00	.02	.10	.00	DIFFERENCE
)4198	E592141	10-08-90	896	565.40	80.00	485.40	99.87	484.80	219.90	~~PER SHIPPER~~
)4198	E592141	10-08-90	896	565.40	80.00	485.40	99.88	484.90	219.90	PER SRP
)4198	E592141			.00	.00	.00	.01	.10	.00	DIFFERENCE
)4263	E592101	10-08-90	896	566.40	81.10	485.30	99.87	484.70	219.90	~~PER SHIPPER~~
)4263	E592101	10-08-90	896	566.40	81.10	485.30	99.86	484.70	219.90	PER SRP
)4263	E592101			.00	.00	.00	.01-	.00	.00	DIFFERENCE
)4372	E592471	10-08-90	896	565.80	80.00	485.80	99.87	485.20	220.10	~~PER SHIPPER~~
)4372	E592471	10-08-90	896	565.80	80.00	485.80	99.92	485.50	220.20	PER SRP
)4372	E592471			.00	.00	.00	.05	.30	.10	DIFFERENCE
)4433	E592671	10-08-90	896	565.60	80.00	485.60	99.87	485.00	220.00	~~PER SHIPPER~~
)4433	E592671	10-08-90	896	565.60	80.00	485.60	99.90	485.20	220.10	PER SRP
)443[illegible]	E592671			.00	.00	.00	.03	.20	.10	DIFFERENCE
)443[illegible]	E592371	10-08-90	896	562.60	77.20	485.40	99.87	484.80	219.90	~~PER SHIPPER~~
)4436	E592371	10-08-90	896	562.60	77.20	485.40	99.89	484.90	219.90	PER SRP
)4436	E592371			.00	.00	.00	.02	.10	.00	DIFFERENCE
)4486	E592291	10-08-90	896	564.40	79.20	485.20	99.87	484.60	219.80	~~PER SHIPPER~~
)4486	E592291	10-08-90	896	564.40	79.20	485.20	99.88	484.70	219.90	PER SRP
)4486	E592291			.00	.00	.00	.01	.10	.10	DIFFERENCE
)4846	E592481	10-08-90	896	562.80	77.20	485.60	99.87	485.00	220.00	~~PER SHIPPER~~
)4846	E592481	10-08-90	896	562.80	77.20	485.60	99.85	485.00	220.00	PER SRP
)4846	E592481			.00	.00	.00	.02-	.00	.00	DIFFERENCE

HEAVY WATER INFORMATION CONTROL SYSTEM
OFF-PLANT AND ON-PLANT UNANALYZED RECEIPTS

COUNTABILITY

REPORT DATE QOH-

RUM NO	REF NO	DATE	LOT NO	GROSS WT	TARE WT	NET WT	MOL %	100% WT	100% KG	REMARKS
5432	E592191	10-08-90	896	563.60	78.10	485.50	99.87	484.90	219.90	~~PER SHIPPER~~
5432	E592191	10-08-90	896	563.60	78.10	485.50	99.88	485.00	220.00	PER SRP
5432	E592191			.00	.00	.00	.01	.10	.10	DIFFERENCE
6480	E592541	10-08-90	896	560.80	75.20	485.60	99.87	485.00	220.00	~~PER SHIPPER~~
6480	E592541	10-08-90	896	560.80	75.20	485.60	99.86	485.00	220.00	PER SRP
6480	E592541			.00	.00	.00	.01-	.00	.00	DIFFERENCE
		PER SHIPPER		41436.80		35691.70		35647.60	16168.50	
OTAL	74 DRUMS	PER SRP		41436.80		35691.70		35654.30	16171.90	
		DIFFERENCE		.00		.00		6.70	3.40	

UNCLASSIFIED

DATE: 2-6-91 TRANSMITTAL UCF 90-1088

FROM: Peggy Jones

MARTIN MARIETTA ENERGY SYSTEMS, INC.
Y-12 PLANT, OAK RIDGE, TN 37831

FAX: (615) 574-2000 (FTS 624)

VERIFICATION: 574-3810

TO: WSRP FAX 239-1372
Attn: David Williamson

INFO:

SUBJECT: "Swiss Order" - Drum Wts. and Chemical Analysis Avg. of 10 Drums

THIS TRANSMITTAL CONSISTS OF 3 PAGES(S)
(EXCLUDING THIS TRANSMITTAL SHEET).

ADC

2/6/91
DATE

UNCLASSIFIED
TRANSMITTAL

Drum #	Gross Wt.	Tare Wt	Net Wt.
2103	252,500	32,700	219,800
0049	255,500	35,800	219,700
0054	255,500	35,200	220,300
0062	255,400	35,500	219,500
2687	253,000	33,600	219,400
3788	254,000	34,500	219,500
0015	255,500	35,500	220,000
0008	255,000	35,200	219,800
0085	255,500	35,600	219,900
6117	250,500	31,800	218,700
0056	255,500	35,600	219,900
0040	255,000	35,600	219,400
0025	255,000	35,400	219,600
0016	255,000	35,400	219,600
0022	255,500	35,800	219,700
0083	255,500	35,600	219,900
0038	255,500	35,700	219,800
0057	255,000	35,500	219,500
0052	255,500	35,700	219,800
18451	252,000	33,000	219,000
5302	254,500	35,000	219,500
0084	255,000	35,500	219,500
0092	255,500	35,600	219,900
0060	255,500	35,700	219,800
0011	256,000	35,600	220,400
0039	255,500	35,300	220,200
2183	254,000	33,600	220,400
0032	256,000	36,000	220,000
2009	251,500	31,300	220,200
2099	254,500	34,500	220,000
0014	256,000	35,500	220,500
0061	255,500	35,500	220,000
0042	255,000	35,000	220,000
0100	255,500	35,200	220,300

(cont'd)

Drum #	Gross wt	Tare wt	Net wt
0047	255,500	35,100	220,400
0058	256,000	35,500	220,500
0079	255,500	35,500	220,000
0033	255,500	35,500	220,000
0053	255,500	35,500	220,000
3698	254,500	34,500	220,000

NMR ANALYSIS

NAME	REQ.	CHARGE	DATE
Larry Jones	Atom %	Deuterium	12/20/90
41043	633299	99.45	
	300	99.92	
	301	99.88	
	302	99.88	
	303	99.89	
	304	99.64	
	305	99.75	
	306	99.67	
	307	99.92	
	308	99.89	
	Avg	99.787 (not from rounded #'s)	
		99.79 Atom % Deuterium	

KATHY JOHNSON
303-1-725-6945

Joseph Oswald

Charge SF115600

UNCLASSIFIED TRANSMITTAL

DATE: 11/19/90 UCF 90-0780

FROM: Peggy Jones

MARTIN MARIETTA ENERGY SYSTEMS, INC.
Y-12 PLANT, OAK RIDGE, TN 37831
FAX: (615) 574-2000 (FTS 624)
VERIFICATION: 574-3810

TO: WSRP FAX 239-1372
Attn: David Williamson

INFO: Martin Marietta Energy Systems
Bear Creek Rd.
P.O. Box 2009
Bldg 9113, Mail Stop 8208 - Peggy Jones
Bldg 9204-2, Mail Stop 8132 - Sheila C. Arnett
Oak Ridge, TN 37831

SUBJECT:

THIS TRANSMITTAL CONSISTS OF 40 PAGE(S)
(EXCLUDING THIS TRANSMITTAL SHEET).

GLB
ADC

11/19/90
DATE

UNCLASSIFIED
TRANSMITTAL

RA025-02

Y-12 PLANT LABORATORY REPORT

RECEIVED	REPORT DATE	TYPE REPORT	BATCH-NUMBER LOC	MTC	REQUISITION
09-21-90	11-07-90	FINAL	0060-SW-0905	0060	633251

CHEMICAL ANALYSIS

.200000	G/G	D
< .010	PPM	HG
< .10	MG/L	CL
.994100	G/G	D2O
3	PPM	TURBID SIO2 EQ

PHYSICAL PROPERTIES

.50	MI/HOS	SPECIF COND (MICROMHOS
.2	MIG/PL	KMNO4 DEMAND MICROG/ML
.12	MCI/L	TRITIUM (MICROCURIE/L)
99.3500	ATOM %	D
5.5800	LOG	PH

RA025-02

Y-12 PLANT LABORATORY REPORT

RECEIVED	REPORT DATE	TYPE REPORT	BATCH-NUMBER LOC	MTC	REQUISITION
09-21-90	11-07-90	FINAL	0060-SW-0906	0060	633252

CHEMICAL ANALYSIS

.200300	G/G	D
< .010	PPM	HG
< .10	MG/L	CL
.995500	G/G	D2O
4	PPM	TURBID SIO2 EQ

PHYSICAL PROPERTIES

.46	MI/HOS	SPECIF COND (MICROMHOS
.3	MIG/ML	KMNO4 DEMAND MICROG/ML
.12	MCI/L	TRITIUM (MICROCURIE/L)
99.5000	ATOM %	D
5.9400	LOG	PH

4

1025-02 Y-12 PLANT LABORATORY REPORT

RECEIVED	REPORT DATE	TYPE REPORT	BATCH-NUMBER LOC	MTC	REQUISITION
0 21-90	11-07-90	FINAL	0060-SW-0907	0060	633253

CHEMICAL ANALYSIS

.200000	G/G	D
.010	PPM	HG
< .10	MG/L	CL
.993900	G/G	D2O
3	PPM	TURBID SIO2 EQ

PHYSICAL PROPERTIES

.43	MI/MOS	SPECIF COND (MICROMHOS
2.6	MIG/ML	KMNO4 DEMAND MICROG/ML
.01	MCI/L	TRITIUM (MICROCURIE/L)
99.3200	ATOM %	D
5.5600	LOG	PH

RA025-02

Y-12 PLANT LABORATORY REPORT

RECEIVED	REPORT DATE	TYPE REPORT	BATCH-NUMBER LOC	MTC	REQUISITION
09-21-90	11-07-90	FINAL	0060-SW-0909	0060	633255

CHEMICAL ANALYSIS

.200000	G/G	D
< .010	PPM	HG
< .10	MG/L	CL
.993900	G/G	D2O
3	PPM	TURBID SIO2 EQ

PHYSICAL PROPERTIES

.41	MI/HOS	SPECIF COND (MICROMHOS
< .2	MIG/ML	KMNO4 DEMAND MICROG/ML
.02	MCI/L	TRITIUM (MICROCURIE/L)
99.2000	ATOM %	D
5.5600	LOG	PH

RA025-02 Y-12 PLANT LABORATORY REPORT

RECEIVED	REPORT DATE	TYPE REPORT	BATCH-NUMBER LOC	MTC	REQUISITION
09-21-90	11-07-90	FINAL	0060-SW-0910	0060	633256

CHEMICAL ANALYSIS

.199900	G/G	D
< .010	PPM	HG
< .10	MG/L	CL
.994000	G/G	D2O
3	PPM	TURBID SIC2 EQ

PHYSICAL PROPERTIES

.69	MI/HOS	SPECIF COND (MICROMHOS
< .2	MIG/ML	KMNO4 DEMAND MICROG/ML
.01	MCI/L	TRITIUM (MICROCURIE/L)
99.3000	ATOM %	D
5.6600	LOG	PH

RA025-02 Y-12 PLANT LABORATORY REPORT

RECEIVED	REPORT DATE	TYPE REPORT	BATCH-NUMBER LOC	MTC	REQUISITION
09-21-90	11-07-90	FINAL	0060-SW-0912	0060	633258

CHEMICAL ANALYSIS

.200100	G/G	D
< .010	PPM	HG
< .10	MG/L	CL
.994600	G/G	D20
5	PPM	TURBID SIO2 EQ

PHYSICAL PROPERTIES

.49	MI/HOS	SPECIF COND (MICROMHOS
< .2	MIG/ML	KMNO4 DEMAND MICROG/ML
.11	MCI/L	TRITIUM (MICROCURIE/L)
99.4000	ATOM %	D
5.6600	LOG	PH

RA025-02

Y-12 PLANT LABORATORY REPORT

RECEIVED	REPORT DATE	TYPE REPORT	BATCH-NUMBER LOC	MTC	REQUISITION
10-04-90	11-07-90	FINAL	0060-SW-0914	0060	633260

CHEMICAL ANALYSIS

.199900	G/G	D
< .010	PPM	MG
< .10	MG/L	CL
.993400	G/G	D2O
3	PPM	TURBID SIO2 EQ

PHYSICAL PROPERTIES

.39	MI/HOS	SPECIF COND (MICROMHOS
< .2	MIC/ML	KMNO4 DEMAND MICROG/ML
.01	MCI/L	TRITIUM (MICROCURIE/L)
99.2600	ATOM %	D
5.4000	LOG	PH

RA025-02

Y-12 PLANT LABORATORY REPORT

RECEIVED	REPORT DATE	TYPE REPORT	BATCH-NUMBER LOC	MTC	REQUISITION
09-21-90	11-07-90	FINAL	0060-SW-0915	0060	633261

CHEMICAL ANALYSIS

.200100	G/G	D
< .010	PPM	HG
< .10	MG/L	CL
.994300	G/G	D2O
4	PPM	TURBID SIO2 EQ

PHYSICAL PROPERTIES

.48	MI/HOS	SPECIF COND (MICROMHOS
< .2	MIG/ML	KMNO4 DEMAND MICROG/ML
.05	MCI/L	TRITIUM (MICROCURIE/L)
99.3700	ATOM %	D
5.4100	LOG	PH

RA025-02

Y-12 PLANT LABORATORY REPORT

RECEIVED	REPORT DATE	TYPE REPORT	BATCH-NUMBER LOC	MTC	REQUISITION
10-04-90	11-07-90	FINAL	0060-SW-0916	0060	633262

CHEMICAL ANALYSIS

.199700	G/G	O
< .010	PPM	HG
< .10	MG/L	CL
.992800	G/G	D2O
<	PPM	TURBID SIO2 EQ

PHYSICAL PROPERTIES

.46	MI/HOS	SPECIF COND (MICROMHOS
< .2	MIG/ML	KMNO4 DEMAND MICROG/ML
.01	MCI/L	TRITIUM (MICROCURIE/L)
99.2000	ATOM %	D
5.3700	LOG	PH

RA025-02

Y-12 PLANT LABORATORY REPORT

RECEIVED	REPORT DATE	TYPE REPORT	BATCH-NUMBER LOC	MTC	REQUISITION
09-26-90	11-07-90	FINAL	0060-SW-0917	0060	633263

CHEMICAL ANALYSIS

.200100 G/G	D	
< .010 PPM	HG	
< .10 MG/L	CL	
.994600 G/G	D2O	
< 1 PPM	TURBID SIO2 EQ	

PHYSICAL PROPERTIES

.54	MI/HOS	SPECIF COND (MICROMHOS
1.1	MIG/ML	KMNO4 DEMAND MICROG/ML
.01	MCI/L	TRITIUM-(MICROCURIE/L)
99.4000	ATOM %	D
5.8900	LOG	PH

RA025-02

Y-12 PLANT LABORATORY REPORT

RECEIVED	REPORT DATE	TYPE REPORT	BATCH-NUMBER LOC	MTC	REQUISITION
09-26-90	11-07-90	FINAL	0060-SW-0918	0060	633264

CHEMICAL ANALYSIS

.200000	G/G	D
< .010	PPM	HG
< .10	MG/L	CL
.993900	G/G	D2O
< 1	PPM	TURBID SIO2 EQ

PHYSICAL PROPERTIES

.46	MI/MOS	SPECIF COND (MICROMHOS
1.6	MIG/ML	KMNO4 DEMAND MICROG/ML
.13	MCI/L	TRITIUM (MICROCURIE/L)
99.3300	ATOM %	D
6.1200	LOG	PH

RA025-02

Y-12 PLANT LABORATORY REPORT

RECEIVED	REPORT DATE	TYPE REPORT	BATCH-NUMBER LOC	MTC	REQUISITION
09-26-90	11-07-90	FINAL	0060-SW-0919	0060	633265

CHEMICAL ANALYSIS

.196400	G/G	D
< .010	PPM	HG
< .10	MG/L	CL
.976400	G/G	D2O
< 1	PPM	TUROID SIO2 EQ

PHYSICAL PROPERTIES

.43	MI/HOS	SPECIF COND (MICROMHOS
1.3	MIG/ML	KMNO4 DEMAND MICROG/ML
.01	MCI/L	TRITIUM (MICROCURIE/L)
97.3800	ATOM %	D
5.5700	LOG	PH

RA025-02

Y-12 PLANT LABORATORY REPORT

RECEIVED	REPORT DATE	TYPE REPORT	BATCH-NUMBER LOC	MTC	REQUISITION
09-26-90	11-07-90	FINAL	0060-SW-0920	0060	633266

CHEMICAL ANALYSIS

.196500	G/G	D
< .010	PPM	HG
< .10	MG/L	CL
.976500	G/G	D2O
< 1	PPM	TURBID SIO2 EQ

PHYSICAL PROPERTIES

.46	MI/HOS	SPECIF COND (MICROMHOS
1.1	MIG/ML	KMNO4 DEMAND MICROG/ML
.04	MCI/L	TRITIUM (MICROCURIE/L)
97.3900	ATOM %	D
5.4300	LOG	PH

RA025-02

Y-12 PLANT LABORATORY REPORT

RECEIVED	REPORT DATE	TYPE REPORT	BATCH-NUMBER LOC	MTC	REQUISITION
09-26-90	11-07-90	FINAL	0060-SW-0921	0060	633267

CHEMICAL ANALYSIS

.196000	G/G	D
< .010	PPM	HG
< .10	MG/L	CL
.974200	G/G	D2O
< 1	PPM	TURBID SIO2 EQ

PHYSICAL PROPERTIES

.50	MI/HOS	SPECIF COND (MICROMHOS
.9	MIG/ML	KMNO4 DEMAND MICROG/ML
.01	MCI/L	TRITIUM (MICROCURIE/L)
97.1400	ATOM %	U
5.5400	LOG	PH

RA025-02

Y-12 PLANT LABORATORY REPORT

RECEIVED	REPORT DATE	TYPE REPORT	BATCH-NUMBER LOC	MTC	REQUISITION
09-26-90	11-07-90	FINAL	0060-SW-0922	0060	633268

CHEMICAL ANALYSIS

.200000	G/G	D
< .010	PPM	HG
< .10	MG/L	CL
.993900	G/G	D2O
< 1	PPM	TURBID SIO2 EQ

PHYSICAL PROPERTIES

.48	MI/HOS	SPECIF COND (MICROMHOS
1.1	MIG/ML	KMNO4 DEMAND MICROG/ML
.01	MCI/L	TRITIUM (MICROCURIE/L)
99.3300	ATOM %	D
5.5200	LOG	PH

RA025-02

Y-12 PLANT LABORATORY REPORT

RECEIVED	REPORT DATE	TYPE REPORT	BATCH-NUMBER LOC	MTC	REQUISITION
09-26-90	11-07-90	FINAL	0050-SW-0923	0060	633269

CHEMICAL ANALYSIS

.199300	G/G	D
< .010	PPM	HG
< .10	MG/L	CL
.990700	G/G	D2O
< 1	PPM	TURBID SIO2 EQ

PHYSICAL PROPERTIES

.45	MI/HOS	SPECIF COND (MICROMHOS
.9	MIG/ML	KMNO4 DEMAND MICROG/ML
.01	MCI/L	TRITIUM (MICROCURIE/L)
98.9700	ATOM %	D
5.7600	LOG	PH

RA025-02

Y-12 PLANT LABORATORY REPORT

RECEIVED	REPORT DATE	TYPE REPORT	BATCH-NUMBER LOC	MTC	REQUISITION
09-26-90	11-07-90	FINAL	0060-SW-0924	0060	633270

CHEMICAL ANALYSIS

.200000	G/G	D
< .010	PPM	HG
< .10	MG/L	CL
.993900	G/G	D2O
< 1	PPM	TURBID SIO2 EQ

PHYSICAL PROPERTIES

.46	MI/MOS	SPECIF COND (MICROMHOS
1.1	MIG/ML	KMNO4 DEMAND MICROG/ML
.01	MCI/L	TRITIUM (MICROCURIE/L)
99.3200	ATOM %	D
5.4100	LOG	PH

RA025-02

Y-12 PLANT LABORATORY REPORT

RECEIVED	REPORT DATE	TYPE REPORT	BATCH-NUMBER LOC	MTC	REQUISITION
09-28-90	11-07-90	FINAL	0060-SW-0925	0060	633271

CHEMICAL ANALYSIS

.200100	G/G	D
< .010	PPM	HG
< .10	MG/L	CL
.995000	G/G	D2O
< 1	PPM	TURBID SIO2 EQ

PHYSICAL PROPERTIES

.49	MI/MOS	SPECIF COND (MICROMMOS
1.3	MIG/ML	KMNO4 DEMAND MICROG/ML
.13	MCI/L	TRITIUM (MICROCURIE/L)
99.4400	ATOM %	D
5.4600	LOG	PH

RA025-02

Y-12 PLANT LABORATORY REPORT

RECEIVED	REPORT DATE	TYPE REPORT	BATCH-NUMBER LOC	MTC	REQUISITION
09-28-90	11-07-90	FINAL	0060-SW-0926	0060	633272

CHEMICAL ANALYSIS

.199900	G/G	D
< .010	PPM	HG
< .10	MG/L	CL
.993400	G/G	D2O
< 1	PPM	TURBID SIO2 EQ

PHYSICAL PROPERTIES

.50	MI/HOS	SPECIF COND (MICROMHOS
1.6	MIG/ML	KMNO4 DEMAND MICROG/ML
.03	MCI/L	TRITIUM (MICROCURIE/L)
99.2700	ATOM %	D
5.9700	LOG	PH

RA025-02

Y-12 PLANT LABORATORY REPORT

RECEIVED	REPORT DATE	TYPE REPORT	BATCH-NUMBER LOC	MTC	REQUISITION
10-01-90	11-07-90	FINAL	0060-SW-0927	0060	633273

CHEMICAL ANALYSIS

.199900	G/G	D
< .010	PPM	HG
< .10	MG/L	CL
.993400	G/G	D2O
< 1	PPM	TURBID SIO2 EQ

PHYSICAL PROPERTIES

.47	MI/MOS	SPECIF COND (MICROMHOS
1.3	MIG/ML	KMNO4 DEMAND MICROG/ML
.02	MCI/L	TRITTIUM (MICROCURIE/L)
99.2700	ATOM %	D
5.4900	LOG	PH

RA025-02

Y-12 PLANT LABORATORY REPORT

RECEIVED	REPORT DATE	TYPE REPORT	BATCH-NUMBER LOC	MTC	REQUISITION
10-01-90	11-07-90	FINAL	0060-SW-0928	0060	633274

CHEMICAL ANALYSIS			PHYSICAL PROPERTIES		
.200000	G/G	D	.45	MI/HOS	SPECIF COND (MICROMHOS
< .010	PPM	MG	1.3	MIG/ML	KMNO4 DEMAND MICROG/ML
< .10	MG/L	CL	.03	MCI/L	TRITIUM (MICROCURIE/L)
.993800	G/G	D2O	99.3100	ATOM %	D
< 1	PPM	TURBID SIO2 EQ	5.4900	LOG	PH

RA025-02

Y-12 PLANT LABORATORY REPORT

RECEIVED	REPORT DATE	TYPE REPORT	BATCH-NUMBER LOC	MTC	REQUISITION
10-05-90	11-07-90	FINAL	0060-SW-0929	0060	633275

CHEMICAL ANALYSIS

.200200	G/G	O
< .002	PPM	HG
< .10	MG/L	CL
.995100	G/G	D2O
2	PPM	TURBID SIC2 EQ

PHYSICAL PROPERTIES

.54	MI/HOS	SPECIF COND (MICROMHOS
.8	MIG/ML	KMNO4 DEMAND MICROG/ML
.04	MCI/L	TRITIUM (MICROCURIE/L)
99.4700	ATOM %	C
5.6700	LOG	PH

RA025-02

Y-12 PLANT LABORATORY REPORT

RECEIVED	REPORT DATE	TYPE REPORT	BATCH-NUMBER LOC	MTC	REQUISITION
10-05-90	11-07-90	FINAL	0060-SW-0930	0060	633276

CHEMICAL ANALYSIS

.200100	G/G	D
< .002	PPM	HG
< .10	MG/L	CL
.994600	G/G	D2O
2	PPM	TURBID SIO2 EQ

PHYSICAL PROPERTIES

.59	MI/MOS	SPECIF COND (MICROMHOS
.8	MIG/ML	KMNO4 DEMAND MICROG/ML
.03	MCI/L	TRITIUM (MICROCURIE/L)
99.4000	ATOM %	D
5.4700	LOG	PH

RA025-02

Y-12 PLANT LABORATORY REPORT

RECEIVED	REPORT DATE	TYPE REPORT	BATCH-NUMBER LOC	MTC	REQUISITION
10-05-90	11-07-90	FINAL	0060-SW-0931	0060	633277

CHEMICAL ANALYSIS

.199800	G/G	D
< .002	PPM	HG
< .10	MG/L	CL
.993200	G/G	D2O
1	PPM	TURBID SIO2 EQ

PHYSICAL PROPERTIES

.77	MI/MO3	SPECIF COND (MICROMHOS
.9	MIG/ML	KMNO4 DEMAND MICROG/ML
.03	MCI/L	TRITIUM (MICROCURIE/L)
99.2400	ATOM %	D
5.3700	LOG	PH

RA025-02

Y-12 PLANT LABORATORY REPORT

RECEIVED	REPORT DATE	TYPE REPORT	BATCH-NUMBER	LOC	MTC	REQUISITION
10-05-90	11-07-90	FINAL	0060-SW-0932		0060	633278

CHEMICAL ANALYSIS

.200300	G/G	D
< .002	PPM	HG
< .10	MG/L	CL
.995500	G/G	D2O
2	PPM	TURBID SIO2 EQ

PHYSICAL PROPERTIES

.59	MI/MOS	SPECIF COND (MICROMHOS
1.0	MIG/ML	KMNO4 DEMAND MICROG/ML
.05	MCI/L	TRITIUM (MICROCURIE/L)
99.5000	ATOM %	D
5.3600	LOG	PH

RA025-02

Y-12 PLANT LABORATORY REPORT

RECEIVED	REPORT DATE	TYPE REPORT	BATCH-NUMBER LOC	MTC	REQUISITION
10-05-90	11-07-90	FINAL	0060-SW-0933	0060	633279

CHEMICAL ANALYSIS

.200200	G/G	D
< .002	PPM	HG
< .10	MG/L	CL
.995100	G/G	D2O
1	PPM	TURBID SIO2 EQ

PHYSICAL PROPERTIES

.75	MI/MOS	SPECIF COND (MICROMHOS
1.1	MIG/ML	KMNO4 DEMAND MICROG/ML
1.38	MCI/L	TRITIUM (MICROCURIE/L)
99.4600	ATOM %	D
6.1000	LOG	PH

RA025-02

Y-12 PLANT LABORATORY REPORT

RECEIVED	REPORT DATE	TYPE REPORT	BATCH-NUMBER LOC	MTC	REQUISITION
10-05-90	11-07-90	FINAL	0060-SW-0934	0060	633280

CHEMICAL ANALYSIS

.200000	G/G	D
< .002	PPM	HG
< .10	MG/L	CL
.994000	G/G	D2O
1	PPM	TURBID SIO2 EQ

PHYSICAL PROPERTIES

.54	MI/HOS	SPECIF COND (MICROMHOS
1.1	MIG/ML	KMNO4 DEMAND MICROG/ML
.83	MCI/L	TRITIUM (MICROCURIE/L)
99.3300	ATOM %	D
5.8800	LOG	PH

RA025-02

Y-12 PLANT LABORATORY REPORT

RECEIVED	REPORT DATE	TYPE REPORT	BATCH-NUMBER LOC	MTC	REQUISITION
10-05-90	11-07-90	FINAL	0060-SW-0935	0060	633281

CHEMICAL ANALYSIS

.200100	G/G	D
< .002	PPM	HG
< .10	MG/L	CL
.994400	G/G	D2O
2	PPM	TURBID SIO2 EQ

PHYSICAL PROPERTIES

.50	MI/HOS	SPECIF COND (MICROMHOS
1.1	MIG/ML	KMNO4 DEMAND MICROG/ML
.14	MCI/L	TRITIUM (MICROCURIE/L)
99.3800	ATOM %	D
5.4300	LOG	PH

RA025-02

Y-12 PLANT LABORATORY REPORT

RECEIVED	REPORT DATE	TYPE REPORT	BATCH-NUMBER LOC	MTC	REQUISITION
10-05-90	11-07-90	FINAL	0060-SW-0936	0060	633282

CHEMICAL ANALYSIS

.200100	G/G	D
< .002	PPM	HG
< .10	MG/L	CL
.994600	G/G	D2O
3	PPM	TURBID SIO2 FQ

PHYSICAL PROPERTIES

.59	MI/MOS	SPECIF COND (MICROMHOS
.7	MIG/ML	KMNO4 DEMAND MICROG/ML
.58	MCI/L	TRITIUM (MICROCURIE/L)
99.3900	ATOM %	D
5.4300	LOG	PH

RA025-02

Y-12 PLANT LABORATORY REPORT

RECEIVED	REPORT DATE	TYPE REPORT	BATCH-NUMBER LOC	MTC	REQUISITION
10-05-90	11-07-90	FINAL	0060-SW-0937	0060	633283

CHEMICAL ANALYSIS

.200300	G/G	D
< .002	PPM	HG
< .10	MG/L	CL
.995600	G/G	D2O
2	PPM	TURBID SIO2 EQ

PHYSICAL PROPERTIES

.58	MI/MOS	SPECIF COND (MICROMHOS
1.0	MIG/ML	KMNO4 DEMAND MICROG/ML
1.84	MCI/L	TRITIUM (MICROCURIE/L)
99.5200	ATOM %	D
5.5500	LOG	PH

RA025-02

Y-12 PLANT LABORATORY REPORT

RECEIVED	REPORT DATE	TYPE REPORT	BATCH-NUMBER LOC	MTC	REQUISITION
10-05-90	11-07-90	FINAL	0060-SW-0938	0060	633284

CHEMICAL ANALYSIS

.200100	G/G	D
< .002	PPM	HG
< .10	MG/L	CL
.994400	G/G	D2O
3	PPM	TURBID SIO2 EQ

PHYSICAL PROPERTIES

.66	MI/HOS	SPECIF COND (MICROMHOS
.8	MIG/ML	KMNO4 DEMAND MICROG/ML
1.99	MCI/L	TRITIUM (MICROCURIE/L)
99.3800	ATOM %	D
5.6400	LOG	PH

RA025-02

Y-12 PLANT LABORATORY REPORT

RECEIVED	REPORT DATE	TYPE REPORT	BATCH-NUMBER LOC	MTC	REQUISITION
10-05-90	11-07-90	FINAL	0060-SW-0939	0060	633285

CHEMICAL ANALYSIS

.200000	G/G	D
< .002	PPM	HG
< .10	MG/L	CL
.993900	G/G	D2O
3	PPM	TURBID SIO2 EQ

PHYSICAL PROPERTIES

.55	MI/HOS	SPECIF COND (MICROMHOS
.7	MIG/ML	KMNO4 DEMAND MICROG/ML
.03	MCI/L	TRITIUM (MICROCURIE/L)
99.3200	ATOM %	D
5.5000	LOG	PH

RA025-02

Y-12 PLANT LABORATORY REPORT

RECEIVED	REPORT DATE	TYPE REPORT	BATCH-NUMBER LOC	MTC	REQUISITION
10-05-90	11-07-90	FINAL	0060-SW-0940	0060	633286

CHEMICAL ANALYSIS

.200100	G/G	D
< .002	PPM	HG
< .10	MG/L	CL
.994400	G/G	D2O
4	PPM	TURBID SIO2 EQ

PHYSICAL PROPERTIES

.58	MI/HOS	SPECIF COND (MICROMHOS
.6	MIG/ML	KMNO4 DEMAND MICROG/ML
1.02	MCI/L	TRITIUM (MICROCURIE/L)
99.3800	ATOM %	D
5.5200	LOG	PH

RA025-02

Y-12 PLANT LABORATORY REPORT

RECEIVED	REPORT DATE	TYPE REPORT	BATCH-NUMBER LOC	MTC	REQUISITION
10-05-90	11-07-90	FINAL	0060-SW-0941	0060	633287

CHEMICAL ANALYSIS

-200100	G/G	O
< .002	PPM	HG
< .10	MG/L	CL
.994400	G/G	D2O
1	PPM	TURBID SIO2 EQ

PHYSICAL PROPERTIES

.73	MI/HOS	SPECIF COND (MICROMHOS
.8	MIG/ML	KMNO4 DEMAND MICROG/ML
.04	MCI/L	TRITIUM (MICROCURIE/L)
99.3800	ATOM %	D
5.8400	LOG	PH

RA025-02

T-12 PLANT LABORATORY REPORT

RECEIVED	REPORT DATE	TYPE REPORT	BATCH-NUMBER LOC	MTC	REQUISITION
10-05-90	11-07-90	FINAL	0060-SW-0942	0060	633288

CHEMICAL ANALYSIS

.200200	G/G	D
< .002	PPM	HG
< .10	MG/L	CL
.995000	G/G	D2O
1	PPM	TURBID SIO2 EQ

PHYSICAL PROPERTIES

.61	MI/HOS	SPECIF COND (MICROMHOS
.7	MIG/ML	KMNO4 DEMAND MICROG/ML
.06	MCI/L	TRITIUM (MICROCURIE/L)
99.4400	ATOM %	D
5.4800	LOG	PH

RA025-02 Y-12 PLANT LABORATORY REPORT

RECEIVED	REPORT DATE	TYPE REPORT	BATCH-NUMBER LOC	MTC	REQUISITION
10-05-90	11-07-90	FINAL	0060-SW-0943	0060	633289

CHEMICAL ANALYSIS

.200100	G/G	D
< .002	PPM	HG
< .10	MG/L	CL
.994700	G/G	D2O
1	PPM	TURBID SIO2 EQ

PHYSICAL PROPERTIES

.77	MI/HOS	SPECIF COND (MICROMHOS
1.0	MIG/ML	KMNO4 DEMAND MICROG/ML
.05	MCI/L	TRITIUM (MICROCURIE/L)
99.4200	ATOM %	D
5.4900	LOG	PH

Y-12 PLANT LABORATORY REPORT

REQUEST NO	REPORT DATE	TYPE REPORT	BATCH-NUMBER LOC	MTC	REQUISITION
10-[illegible]	11-07-90	FINAL	0060-SW-0944	0060	633290

ANALYSIS			PHYSICAL PROPERTIES		
[illegible]0100	G/G	D	.57	MI/HOS	SPECIF COND (MICROMHOS
.002	PPM	HG	.7	MIG/ML	KMNO4 DEMAND MICROG/ML
< .10	MG/L	CL	.08	MCI/L	TRITIUM (MICROCURIE/L)
.994600	G/G	D2O	99.4000	ATOM %	D
1	PPM	TURBID SIO2 EQ	5.6300	LOG	PH

UCN-7721B
(2 1-86)

OAK RIDGE Y-12 PLANT INFORMATION CONTROL FORM

9/4 9/4

DOCUMENT DESCRIPTION (Completed By Requesting Division)

Document No	Author's Telephone No.	Acct. No.	Date of Request
Y/TS-1568	6-0263	2366000 3	8/29/96

Classified Title: TRITIUM ANALYSIS FROM 1969 TO FY 87 (FROM L. HEADRICK, 9204-2)

Author(s) Requestor: Steve Wiley

TYPE: ☐ Formal Report ☐ Informal Report ☐ Progress/Status Report ☐ Co-Op Report ☐ Thesis/Term Paper

☐ Oral Presentation (identify meeting, sponsor, location, date):

☐ Journal Article (Identify Journal):

☒ Other (Specify): To Be Released to ChemRisk, Phase II

Document will be published in proceedings ☑ No ☐ Yes

Document will be distributed at meeting ☑ No ☐ Yes

Document has patent or invention significance ☑ No ☐ Yes (Identify)

Document has been previously released ☑ No ☐ Yes (Reference)

DIVISION REVIEW AND APPROVAL (Completed By Requesting Division)

TECHNICAL CLASSIFICATION REVIEW (Divisional Classification Representative)

Title(s): U Abstract: NA

DOCUMENT: Level U Category —

Signature 8/28/96 Date

DOCUMENT REQUEST APPROVED (Division or Department)

Signature 8/29/96 Date

Signature Date

THE REMAINDER OF THIS FORM TO BE COMPLETED BY THE TECHNICAL INFORMATION OFFICE

DISTRIBUTION

☐ Internal Distribution

☐ External Distribution

TID-4500 Category _____ or _____ Copies to OSTI

ANNOUNCED IN: ERA Atomindex (Available from NTIS)

M-3679 Category

ANNOUNCE IN: ☐ AWDR (Available from OSTI) ☐ ANCR

Distribution:	UCN-7721B	DOE F-1332.15	Document
Y-12 Central Files	Y-12 RC	Y-12 RC	Y-12 RC
TIO File	L.L. McCauley		
	S.W. Wiley		
	R.M. Keyser		

Distribution Remarks: Unlimited (ChemRisk)

APPROVAL AND RELEASE

Date Received

Date Initiated 8/30/96

☒ CLASSIFICATIONS:

Title(s): U Abstract —

DOCUMENT:

Level U Category —

Weapons Date — Sigma —

Y-12 Classification Office 8/29/96 Date

☐ Editor Date

☒ Patent Office Date

☐ Date

☐ Date

APPROVED FOR: ☐ Declassification ☐ Release subject to use of the following admonitory markings and conditions:

☐ Disclaimer ☐ Copyright ☐ Patent Caution ☐ Other

Technical Information Office 9/4/96 Date

Conditions/Remarks:

173

1969-1970

APPROVED FOR PUBLIC RELEASE

9/4/96

Technical Information Office Date

METHOD

UNIT

6-3-69

REQUISITION 920421

BATCH NO.

INSERT

tritium Sample
Mc/per lb tritium
Void - resample
on 920565

WORK REQUEST NO.

COORDINATOR

REPORT TO
Brotherton

BUILDING NO.
9204-2

PHONE NO.
3-7359

REQUISITION

CHECK DESIRED ANALYSIS

g U/g
g Li/g
g D/g
g H/g
g Mo/g
g F/g
SPEC.
ASSAY
C
Sp. G.

RESULTS REPORTED ON SAMPLE AS RECEIVED BASIS UNLESS OTHERWISE NOTED.

REPT. BY J. L.

DATE 6-16-69

METHOD OF ANAL.

REQUISITION 920565

BATCH NO. 040 INSERT 0001

Resample of Req. # 920421

WORK REQUEST NO.

COORDINATOR

REPORT TO
Brotherton

BUILDING NO.
9204-2

PHONE NO.
35484

REQUISITION

CHECK DESIRED ANALYSIS

g U/g
g Li/g
g D/g
g H/g
g Mo/g
g F/g
SPEC.
ASSAY
C
Sp. G.

3068.6 [illegible]
Brotherton

RESULTS REPORTED ON SAMPLE AS RECEIVED BASIS UNLESS OTHERWISE NOTED.

REPT. BY [illegible]

DATE 6-3-69

METHOD OF ANAL.

REQUISITION 920566

BATCH NO. 040 INSERT 0002

~~Tritium~~ Sample
TRITIUM

WORK REQUEST NO.

COORDINATOR

REPORT TO
Brotherton

BUILDING NO.
9204-2

PHONE NO.
35484

REQUISITION

CHECK DESIRED ANALYSIS

g U/g
g Li/g
g D/g
g H/g
g Mo/g
g F/g
SPEC.
ASSAY
C
Sp. G.

Pls Qualyse
Dunaff - Mark

RESULTS REPORTED ON SAMPLE AS RECEIVED BASIS UNLESS OTHERWISE NOTED.

REPT. BY [illegible]

DATE 6-3-69

METHOD OF ANAL.

REQUISITION

	CHECK DESIRED ANALYSIS
	g U/g
	g Li/g
	g D/g
	g H/g
	g Mo/g
	g F/g
	SPEC.
	ASSAY
3235 μg/g	C
Returned	Sp. G.

RESULTS REPORTED ON SAMPLE AS RECEIVED BASIS UNLESS OTHERWISE NOTED.

REPT. BY	[illegible]
DATE	1-6-70
METHOD OF ANAL.	

REQUISITION

	CHECK DESIRED ANALYSIS
	g U/g
	g Li/g
	g D/g
	g H/g
	g Mo/g
	g F/g
	SPEC.
	ASSAY
	C
3133 μg/g	Sp. G.
Returned	

RESULTS REPORTED ON SAMPLE AS RECEIVED BASIS UNLESS OTHERWISE NOTED.

REPT. BY	[illegible]
DATE	11-14-69
METHOD OF ANAL.	

REQUISITION

	CHECK DESIRED ANALYSIS
	g U/g
	g Li/g
	g D/g
	g H/g
	g Mo/g
	g F/g
	SPEC.
	ASSAY
	C
	Sp. G.
2781 μg/g	
Returned	

RESULTS REPORTED ON SAMPLE AS RECEIVED BASIS UNLESS OTHERWISE NOTED.

REPT. BY	
DATE	
METHOD OF ANAL.	

REQUISITION

CHECK DESIRED ANALYSIS
g U/g
g Li/g
g D/g
g H/g
g Mo/g
g F/g
SPEC.
ASSAY
C
Sp. G.

2008 μc/gb tritium

RESULTS REPORTED ON SAMPLE AS RECEIVED BASIS UNLESS OTHERWISE NOTED.

REPT. BY	New
DATE	4-13-70
METHOD OF ANAL.	

REQUISITION

CHECK DESIRED ANALYSIS
g U/g
g Li/g
g D/g
g H/g
g Mo/g
g F/g
SPEC.
ASSAY
C
Sp. G.

2684. μc/gb tritium

RESULTS REPORTED ON SAMPLE AS RECEIVED BASIS UNLESS OTHERWISE NOTED.

REPT. BY	
DATE	
METHOD OF ANAL.	

REQUISITION

CHECK DESIRED ANALYSIS
g U/g
g Li/g
g D/g
g H/g
g Mo/g
g F/g
SPEC.
ASSAY
C
Sp. G.

2159 μc/gb tritium

RESULTS REPORTED ON SAMPLE AS RECEIVED BASIS UNLESS OTHERWISE NOTED.

REPT. BY	New
DATE	4-13-70
METHOD OF ANAL.	

REQUISITION	CHECK DESIRED ANALYSIS
	g U/g
	g Li/g
	g D/g
	g H/g
	g Mo/g
	g F/g
	SPEC.
	ASSAY
	C
3170 Hydrolyzed Lithium	Sp. G.

RESULTS REPORTED ON SAMPLE AS RECEIVED BASIS UNLESS OTHERWISE NOTED.

REPT. BY	[illegible]
DATE	10-13-70
METHOD OF ANAL.	

REQUISITION	CHECK DESIRED ANALYSIS
	g U/g
	g Li/g
	g D/g
	g H/g
	g Mo/g
	g F/g
	SPEC.
1593 Hydrolyzed Lithium	ASSAY
	C
	Sp. G.

RESULTS REPORTED ON SAMPLE AS RECEIVED BASIS UNLESS OTHERWISE NOTED.

REPT. BY	[illegible]
DATE	10-8-70
METHOD OF ANAL.	

1971-1972

g U/g	
g Li/g	
g D/g	
g H/g	
g Mo/g	
g F/g	
SPEC.	
ASSAY	
C	
Sp. G.	

1175 μg/g tritium

RESULTS REPORTED ON SAMPLE AS RECEIVED BASIS UNLESS OTHERWISE NOTED.

REPT. BY	New
DATE	4-30-71
METHOD OF ANAL.	

g U/g	
g Li/g	
g D/g	
g H/g	
g Mo/g	
g F/g	
SPEC.	
ASSAY	
C	
Sp. G.	

1201 μg/g tritium

RESULTS REPORTED ON SAMPLE AS RECEIVED BASIS UNLESS OTHERWISE NOTED.

REPT. BY	New
DATE	4-30-71
METHOD OF ANAL.	

g U/g	
g Li/g	
g D/g	
g H/g	
g Mo/g	
g F/g	
SPEC.	
ASSAY	
C	
Sp. G.	

1874.8 μg/g tritium

RESULTS REPORTED ON SAMPLE AS RECEIVED BASIS UNLESS OTHERWISE NOTED

REPT. BY	New
DATE	1-11-71
METHOD OF ANAL.	

REQUISITION	CHECK DESIRED ANALYSIS
	g U/g
	g Li/g
	g D/g
	g H/g
	g Mo/g
	g F/g
	SPEC.
	ASSAY
	C
	Sp. G.

1506.3 μc/lb
Tritium

RESULTS REPORTED ON SAMPLE AS RECEIVED BASIS UNLESS OTHERWISE NOTED.

REPT. BY	
DATE	JAN 14 1971
METHOD OF ANAL.	

REQUISITION	CHECK DESIRED ANALYSIS
	g U/g
	g Li/g
	g D/g
	g H/g
951 μc/lb	g Mo/g
	g F/g
	SPEC.
	ASSAY
	C
	Sp. G.

RESULTS REPORTED ON SAMPLE AS RECEIVED BASIS UNLESS OTHERWISE NOTED.

REPT. BY	AO
DATE	10-1-71
METHOD OF ANAL.	

REQUISITION	CHECK DESIRED ANALYSIS
	g U/g
	g Li/g
	g D/g
	g H/g
	g Mo/g
	g F/g
	SPEC.
	ASSAY
	C
	Sp. G.

609 μc/lb tritium

RESULTS REPORTED ON SAMPLE AS RECEIVED BASIS UNLESS OTHERWISE NOTED.

REPT. BY	
DATE	AUG 18 1971
METHOD OF ANAL.	

REQUISITION

CHECK DESIRED ANALYSIS

- g U/g
- g Li/g
- g D/g
- g H/g
- g Mo/g
- g F/g
- SPEC.
- ASSAY
- C
- Sp. G.

682 μcf/lb tritium

RESULTS REPORTED ON SAMPLE AS RECEIVED BASIS UNLESS OTHERWISE NOTED.

REPT. BY	
DATE	MAR 24 1972
METHOD OF ANAL.	

REQUISITION

CHECK DESIRED ANALYSIS

- g U/g
- g Li/g
- g D/g
- g H/g
- g Mo/g
- g F/g
- SPEC.
- ASSAY
- C
- Sp. G.

796 μcf/lb tritium

RESULTS REPORTED ON SAMPLE AS RECEIVED BASIS UNLESS OTHERWISE NOTED.

REPT. BY	[illegible]
DATE	1-25-72
METHOD OF ANAL.	

REQUISITION

CHECK DESIRED ANALYSIS

- g U/g
- g Li/g
- g D/g
- g H/g
- g Mo g
- g F/g
- SPEC.
- ASSAY
- C
- Sp. G.

8.86 μcf/lb tritium

RESULTS REPORTED ON SAMPLE AS RECEIVED BASIS UNLESS OTHERWISE NOTED.

REPT. BY	[illegible]
DATE	1-19-72
METHOD OF ANAL.	

REQUISITION

CHECK DESIRED ANALYSIS
g U/g
g Li/g
g D/g
g H/g
g Mo/g
g F/g
SPEC.
ASSAY
C
Sp. G.

695 uc/gb tritium

RESULTS REPORTED ON SAMPLE AS RECEIVED BASIS UNLESS OTHERWISE NOTED.

REPT. BY	NM
DATE	9-11-72
METHOD OF ANAL.	

REQUISITION

CHECK DESIRED ANALYSIS
g U/g
g Li/g
g D/g
g H/g
g Mo/g
g F/g
SPEC.
ASSAY
C
Sp. G.

609 uc/gb tritium

RESULTS REPORTED ON SAMPLE AS RECEIVED BASIS UNLESS OTHERWISE NOTED.

REPT. BY	
DATE	MAR 24 1972
METHOD OF ANAL.	

1973-1974

REQUISITION

CHECK DESIRED ANALYSIS

g U/g
g Li/g
g D/g
g H/g
g Mo/g
g F/g
SPEC.
ASSAY
C
Sp. G.
Vol. p

380 Mc/lb
Tritium

RESULTS REPORTED ON SAMPLE AS RECEIVED BASIS UNLESS OTHERWISE NOTED.

REPT. BY	
DATE	
METHOD OF ANAL.	

REQUISITION

CHECK DESIRED ANALYSIS

g U/g
g Li/g
g D/g
g H/g
g Mo/g
g F/g
SPEC.
ASSAY
C
Sp. G.
Vol. p

2148 Mc/lb
Tritium

RESULTS REPORTED ON SAMPLE AS RECEIVED BASIS UNLESS OTHERWISE NOTED.

REPT. BY	aw
DATE	3-9-73
METHOD OF ANAL.	

REQUISITION

CHECK DESIRED ANALYSIS

g U/g
g Li/g
g D/g
g H/g
g Mo g
g F/g
SPEC.
ASSAY
C
Sp. G.
Vol. p

425 Mc/

RESULTS REPORTED ON SAMPLE AS RECEIVED BASIS UNLESS OTHERWISE NOTED.

REPT. BY	aO
DATE	1-18-73
METHOD OF ANAL.	

7-25-73

REQUISITION 972251

Tritium Sample

BATCH NO.

INSERT

325 µC/pound

Tritium

WORK REQUEST NO

COORDINATOR

REPORT TO R. Brotherton

BUILDING NO. 9204-2A

PHONE NO. 3-5737

REQUISITION 972215

	CHECK DESIRED ANALYSIS
	g U/g
	g Li/g
	g D/g
	g H/g
325 µc/lb	g Mo/g
Tritium	g F/g
	SPEC.
	ASSAY
	C
	Sp. G.
	Vol. p

RESULTS REPORTED ON SAMPLE AS RECEIVED BASIS UNLESS OTHERWISE NOTED.

REPT. BY	[illegible]
DATE	6-15-73
METHOD OF ANAL.	

REQUISITION 972170

	CHECK DESIRED ANALYSIS
	g U/g
	g Li/g
	g D/g
367 µc/lb	g H/g
Tritium	g Mo/g
	g F/g
	SPEC.
	ASSAY
	C
	Sp. G.
	Vol. p

RESULTS REPORTED ON SAMPLE AS RECEIVED BASIS UNLESS OTHERWISE NOTED.

REPT. BY	[illegible]
DATE	6-11-73
METHOD OF ANAL.	

REQUISITION [illegible]

	CHECK DESIRED ANALYSIS
	g U/g
	g Li/g
	g D/g
	g H/g
	g Mo/g
	g F/g
	SPEC.
	ASSAY
	C
	Sp. G.
	Vol. p

227 uc/lb
Tritium

RESULTS REPORTED ON SAMPLE AS RECEIVED BASIS UNLESS OTHERWISE NOTED.

REPT. BY	
DATE	
METHOD OF ANAL.	

REQUISITION [illegible]

	CHECK DESIRED ANALYSIS
	g U/g
	g Li/g
	g D/g
	g H/g
	g Mo/g
	g F/g
	SPEC.
	ASSAY
	C
	Sp. G.
	Vol. p

206 uc/lb
tritium

RESULTS REPORTED ON SAMPLE AS RECEIVED BASIS UNLESS OTHERWISE NOTED.

REPT. BY	
DATE	SEP 19 1973
METHOD OF ANAL.	

REQUISITION [illegible]

	CHECK DESIRED ANALYSIS
	g U/g
	g Li/g
	g D/g
	g H/g
	g Mo/g
	g F/g
	SPEC.
	ASSAY
	C
	Sp. G.
	Vol p

224 uc tritium/lb.

RESULTS REPORTED ON SAMPLE AS RECEIVED BASIS UNLESS OTHERWISE NOTED.

REPT. BY	
DATE	SEP 19 1973
METHOD OF ANAL.	

REQUISITION

CHECK DESIRED ANALYSIS

	g U/g
	g Li/g
	g D/g
	g H/g
	g Mo/g
	g F/g
	SPEC.
	ASSAY
	C
	Sp. G.
	Vol. p

189 μc/lb tritium

RESULTS REPORTED ON SAMPLE AS RECEIVED BASIS UNLESS OTHERWISE NOTED.

REPT. BY	
DATE	FEB 19 1974
METHOD OF ANAL.	

REQUISITION

CHECK DESIRED ANALYSIS

	g U/g
	g Li/g
	g D/g
	g H/g
	g Mo/g
	g F/g
	SPEC.
	ASSAY
	C
	Sp. G.
	Vol. p

203 μc/lb Tritium

RESULTS REPORTED ON SAMPLE AS RECEIVED BASIS UNLESS OTHERWISE NOTED.

REPT. BY	
DATE	
METHOD OF ANAL.	

REQUISITION

CHECK DESIRED ANALYSIS

	g U/g
	g Li/g
	g D/g
	g H/g
	g Mo/g
	g F/g
	SPEC.
	ASSAY
	C
	Sp. G.
	Vol. p

295 μc/lb Tritium

RESULTS REPORTED ON SAMPLE AS RECEIVED BASIS UNLESS OTHERWISE NOTED.

REPT. BY	
DATE	
METHOD OF ANAL.	

REQUISITION 872319

CHECK DESIRED ANALYSIS

	g U/g
	g Li/g
	g D/g
	g H/g
	g Mo/g
	g F/g
	SPEC.
	ASSAY
	C
	Sp. G.
	Vol. p

MC PER POUND TRITIUM

159 μc/Lb

RESULTS REPORTED ON SAMPLE AS RECEIVED BASIS UNLESS OTHERWISE NOTED.

REPT. BY	SKD
DATE	5/1/74
METHOD OF ANAL.	

REQUISITION 872330

CHECK DESIRED ANALYSIS

	g U/g
	g Li/g
	g D/g
	g Mo/g
	g F/g
	SPEC.
	ASSAY
	C
	Sp. G.
	Vol. p

195 μc/Lb Tritium

RESULTS REPORTED ON SAMPLE AS RECEIVED BASIS UNLESS OTHERWISE NOTED.

REPT. BY	SKD
DATE	5/15/74
METHOD OF ANAL.	

REQUISITION 872392

CHECK DESIRED ANALYSIS

	g U/g
	g Li/g
	g D/g
	g H/g
	g Mo/g
	g F/g
	SPEC.
	ASSAY
	C
	Sp. G.
	Vol. p

MC Per Pound tritium

176 μc/Lb

RESULTS REPORTED ON SAMPLE AS RECEIVED BASIS UNLESS OTHERWISE NOTED.

REPT. BY	SKD
DATE	8/18/74
METHOD OF ANAL.	

REQUISITION 872630

CHECK DESIRED ANALYSIS

g U/g
g Li/g
g D/g
g H/g
g Mo/g
g F/g
SPEC.
ASSAY
C
Sp. G.
Vol. p

129 uc/lb

RESULTS REPORTED ON SAMPLE AS RECEIVED BASIS UNLESS OTHERWISE NOTED.

REPT. BY	AW
DATE	6-17-74
METHOD OF ANAL.	

REQUISITION 872629

CHECK DESIRED ANALYSIS

g U/g
g Li/g
g D/g
g H/g
g Mo/g
g F/g
SPEC.
ASSAY
C
Sp. G.
Vol. p

127 uc/lb tritium

RESULTS REPORTED ON SAMPLE AS RECEIVED BASIS UNLESS OTHERWISE NOTED.

REPT. BY	AO
DATE	6-11-74
METHOD OF ANAL.	

REQUISITION 872628

CHECK DESIRED ANALYSIS

g U/g
g Li/g
g D/g
g H/g
g Mo/g
g F/g
SPEC.
ASSAY
C
Sp. G.
Vol. p

MC per lb tritium

150 MC/LB

RESULTS REPORTED ON SAMPLE AS RECEIVED BASIS UNLESS OTHERWISE NOTED.

REPT. BY	SKS
DATE	6/1/74
METHOD OF ANAL.	

REQUISITION [illegible]

	CHECK DESIRED ANALYSIS
	g U/g
	g Li/g
	g D/g
	g H/g
Mc/lb = 128	Mo/g
MC / Titrimetric	g F/g
	SPEC. ASSAY
	C
	Sp. G.
	Vol. p

RESULTS REPORTED ON SAMPLE AS RECEIVED BASIS UNLESS OTHERWISE NOTED.

REPT. BY	aw
DATE	12-11-74
METHOD OF ANAL.	

1975-1976

REQUISITION [illegible]

CHECK DESIRED ANALYSIS

	g U/g
	g Li/g
99.58 uc/lb	g D/g
tritium	g H/g
	g Mo/g
	g F/g
	SPEC.
	ASSAY
	C
	Sp. G.
	Vol. p

RESULTS REPORTED ON SAMPLE AS RECEIVED BASIS UNLESS OTHERWISE NOTED.

REPT. BY	
DATE	APR 24 1975
METHOD OF ANAL.	

REQUISITION 972887

BATCH NO.

INSERT 4449

Cyl. 3+4 air force trailer

89 uc/lb tritium

WORK REQUEST NO

COORDINATOR

APR 9 1975

REPORT TO R. P. Brotherton

BUILDING NO. 9204-2

PHONE NO. 3-5484

REQUISITION [illegible]

CHECK DESIRED ANALYSIS

	g U/g
	g Li/g
	g D/g
	g H/g
	g Mo/g
	g F/g
	SPEC.
	ASSAY
	C
	Sp. G.
	Vol. p

96 uc/lb tritium

RESULTS REPORTED ON SAMPLE AS RECEIVED BASIS UNLESS OTHERWISE NOTED.

REPT. BY	AO
DATE	2-27-75
METHOD OF ANAL.	

REQUISITION

CHECK DESIRED ANALYSIS

g U/g
g Li/g
g D/g
g H/g
g F/g
SPEC.
ASSAY
C
Sp. G.
Vol. p

8.913 Ci/lb
Tritium

RESULTS REPORTED ON SAMPLE AS RECEIVED BASIS UNLESS OTHERWISE NOTED.

REPT. BY

DATE APR 24 1975

METHOD OF ANAL.

REQUISITION 535606

040-4554
TRITIUM

(tritium)

208.6 uc/lb

SEP 15 1975

REPORT TO R Butterton
BUILDING NO. 9204-2
PHONE NO. 3-5737

REQUISITION 535625

Cyls 33 & 74 - "D"
Batch # 4573

278.8 uc/lb

SEP 15 1975

REPORT TO Roger Butterton
BUILDING NO 9204-2
PHONE NO. 3-5737

REQUISITION 535687

tritium

278.8 μc/lb

SEP 15 1976

REPORT TO Brookhaven

BUILDING NO. 9204-2

PHONE NO. 3-5484

REQUISITION 535702

attention Health Physics.

mc per pound tritium

56 uci/lb tritium

JAN 12 1976

REPORT TO R.P. Brotherson
BUILDING NO 9204-2
PHONE NO. 35248

REQUISITION 535748

050-4416
4417
4418

TRITIUM ONLY

Resample of:
535658

Void

FEB 24 1976

REPORT TO Brotherson
BUILDING NO. 9204-2
PHONE NO. 3-5248

REQUISITION 535749

050-4419
-4420
-4421

TRITIUM ONLY

Resample of:
535659

VOID FEB 1976

REPORT TO Brotherson
BUILDING NO 9204-2
PHONE NO 3-5248

REQUISITION 535768

040-4640

48 uci/lb tritium	g U/g g Ag/g g D/g g H/g g Na/g g F/g SPEC. ASSAY

50 uci/lb tritium	g U/g g Ag/g g D/g g H/g g Na/g g F/g SPEC. ASSAY

54 uci/lb tritium

JAN 12 1976

AW	REPT BY
4-29-76	DATE
	DEPT

AW	REPT BY
4-29-76	DATE
	DEPT

REPORT TO Brotherton

BUILDING NO 9204-2

PHONE NO. 3-5484

REQUISITION 535974

Tritium Sample.

8-3-76

72 uCi/ml

Tritium

OCT 01 1976

REPORT TO R.P. Brotherton

BUILDING NO 9204-2

PHONE NO. 3-5484

REQUISITION 535963 cl/s 11+12 AFT

tritium

LOST Sample

a.z.

OCT 01 1976

REPORT TO Bro Theaton

BUILDING NO. 9204-2

PHONE NO 3-5484

46 uCi/ml

CW	REPT BY
4-29-96	DATE
	DEPT

REQUISITION 649798

BATCH NO. 040 INSERT 4842

65 μCi/lb Tritium

WORK REQUEST NO.

COORDINATOR

OCT 2 . 1976

REPORT TO Brotherton

BUILDING NO. 9204-2

PHONE NO. 3-5484

REQUISITION 649808 17-18 A.F.T.

BATCH NO. 040 INSERT 4852

65 μCi/lb Tritium

b

WORK REQUEST NO.

COORDINATOR

OCT 21 1976

REPORT TO R.P. Brotherton

BUILDING NO. 9204-2

PHONE NO. 3-5484

REQUISITION 649810

BATCH NO. 040 INSERT 4854

58 μCi/lb Tritium

WORK REQUEST NO.

COORDINATOR

OCT 21 1976

REPORT TO R.P. Brotherton

BUILDING NO. 9204-2

PHONE NO. 3-5484

REQUISITION 649892

BATCH NO. 040 INSERT 4911

36 Mci/lb Tritium

WORK REQUEST NO.

COORDINATOR

10-20-76

REPORT TO R.P. BROTHERTON

BUILDING NO. 9204-2

PHONE NO. 3-5248

REQUISITION 649928 5 3-4

BATCH NO. 040 INSERT 4940

43 Mci/lb Tritium

WORK REQUEST NO.

COORDINATOR

11-5-76

REPORT TO R.P. BROTHERTON

BUILDING NO. 9204-2

PHONE NO. 3-5248

1997-1998

REQUISITION 789101

BATCH NO.

0 4 0 | 5 0 8 8

Dwei Ali -
tritium

WORK REQUEST NO.

COORDINATOR

JUN 9 1977

REPORT TO P.P. Brotherton

BUILDING NO 9204-2

PHONE NO 3-5248

REQUISITION 577743

	CHECK DESIRED ANALYSIS
	g D/g
	g N/g H
	g D/g
	g H/g
	g Mo/g
330 N Cik	g F/g
	SPEC
	ASSAY
	%
	Sp. G.
	Vol.

RESULTS REPORTED ON SAMPLE AS RECEIVED BASIS UNLESS OTHERWISE NOTED.

RPT. BY	
DATE	10-28-83
METHOD OF ANAL.	

REQUISITION

CHECK DESIRED ANALYSIS

g U/g
g Li/g
g D/g
g H/g
g Mo/g
g F/g
SPEC.
ASSAY
C
Sp. G.
Vol. p

154 uci/lb
Tritium

RESULTS REPORTED ON SAMPLE AS RECEIVED BASIS UNLESS OTHERWISE NOTED.

REPT. BY
DATE JUL 11 1980
METHOD OF ANAL.

REQUISITION

CHECK DESIRED ANALYSIS

g U/g
g Li/g
g D/g
g H/g
g Mo/g
g F/g
SPEC.
ASSAY
C
Sp. G.

13 uci/lb
Tritium

RESULTS REPORTED ON SAMPLE AS RECEIVED BASIS UNLESS OTHERWISE NOTED.

REPT BY fm
DATE 1-23-80
METHOD OF ANAL.

REQUISITION

CHECK DESIRED ANALYSIS

g U/g
g Li/g
g D/g
g H/g
g Mo/g
g F/g
SPEC.
ASSAY
C
Sp. G.

60 uci/lb
Tritium

RESULTS REPORTED ON SAMPLE AS RECEIVED BASIS UNLESS OTHERWISE NOTED.

REPT BY efe
DATE 5-23-79
METHOD OF ANAL.

197, 1980

REQUISITION

	CHECK DESIRED ANALYSIS
381 uci/lb. Tritium mc Per Pound	g U/g
	g Li/g
	g D/g
	g H/g
	g Mo/g
	g F/g
	SPEC.
	ASSAY
	C
	Sp. G.
	Vol. p

RESULTS REPORTED ON SAMPLE AS RECEIVED BASIS UNLESS OTHERWISE NOTED.

REPT. BY	Ugh
DATE	Sept. 3, 1981

REQUISITION

	CHECK DESIRED ANALYSIS
129 uci/lb Tritium	g U/g
	g Li/g
	g D/g
	g H/g
	g Mo/g
	g F/g
	SPEC.
	ASSAY
	C
	Sp. G.
	Vol. p

RESULTS REPORTED ON SAMPLE AS RECEIVED BASIS UNLESS OTHERWISE NOTED.

REPT. BY	AO
DATE	1-5-81
METHOD OF ANAL.	

1981-1982

1983-1984

1965-1966

REQUISITION 40242

CHECK DESIRED ANALYSIS

	g U/g
	g Li/g
	g D/g
	g H/g
	g Mo/g
	g F/g
	SPEC.
	ASSAY
	C
	Sp. G.

127 Mc/Pound
tritium

RESULTS REPORTED ON SAMPLE AS RECEIVED BASIS UNLESS OTHERWISE NOTED.

REPT. BY	
DATE	APR 18 1983
METHOD OF ANAL.	

REQUISITION 40167

CHECK DESIRED ANALYSIS

	g U/g
	g Li/g
	g D/g
	g H/g
	g Mo/g
	g F/g
	SPEC.
	ASSAY
	C
	Sp. G.

1.41 mc/gal

RESULTS REPORTED ON SAMPLE AS RECEIVED BASIS UNLESS OTHERWISE NOTED.

REPT. BY	
DATE	JAN 27 1983
METHOD OF ANAL.	

REQUISITION 40087

CHECK DESIRED ANALYSIS

	g U/g
	g Li/g
	g D/g
	g H/g
	g Mo/g
	g F/g
	SPEC.
	ASSAY
	C
	Sp. G.

127 Mc/gal
tritium

RESULTS REPORTED ON SAMPLE AS RECEIVED BASIS UNLESS OTHERWISE NOTED.

REPT. BY	
DATE	1-12-83
METHOD OF ANAL.	

REQUISITION	CHECK DESIRED ANALYSIS
	g U/g
	g Li/g
	g D/g
	g H/g
	g Mo/g
	g F/g
	SPEC.
	ASSAY
	C
	Sp. G.

57 uci/lb
Tritium

RESULTS REPORTED ON SAMPLE AS RECEIVED BASIS UNLESS OTHERWISE NOTED.

REPT. BY	
DATE	6-14-83
METHOD OF ANAL.	

REQUISITION	CHECK DESIRED ANALYSIS
	g U/g
	g Li/g
	g D/g
	g H/g
	g Mo/g
	g F/g
	SPEC.
	ASSAY
	C
	Sp. G.

58 uci/lb
Tritium

RESULTS REPORTED ON SAMPLE AS RECEIVED BASIS UNLESS OTHERWISE NOTED.

REPT. BY	
DATE	6-14-83
METHOD OF ANAL.	

REQUISITION	CHECK DESIRED ANALYSIS
	g U/g
	g Li/g
	g D/g
	g H/g
	g Mo/g
	g F/g
	SPEC.
	ASSAY
	C
	Sp. G.

122 NC/Pound
Tritium

RESULTS REPORTED ON SAMPLE AS RECEIVED BASIS UNLESS OTHERWISE NOTED.

REPT. BY	
DATE	APR 18 1983
METHOD OF ANAL.	

REQUISITION 40359 6-13-84

CHECK DESIRED ANALYSIS

	g U/g
	g Li/g
	g D/g
	g H/g
	g Mo/g
	g F/g
	SPEC.
	ASSAY
	C
	Sp. G.

80 uci/g Tritium

RESULTS REPORTED ON SAMPLE AS RECEIVED BASIS UNLESS OTHERWISE NOTED.

RECPT. BY	
DATE	6-14-83
METHOD OF ANAL.	

REQUISITION 777753

CHECK DESIRED ANALYSIS

	g U/g
	g Li/g
	g D/g
	g H/g
	g Mo/g
	g F/g
	SPEC.
	ASSAY
	C
	Sp. G.
	Vol. p

370 Nci/g Tritium

RESULTS REPORTED ON SAMPLE AS RECEIVED BASIS UNLESS OTHERWISE NOTED.

RECPT. BY	DL
DATE	9-28-84
METHOD OF ANAL.	

REQUISITION										"CHECK" DESIRED ANALYSIS
										g U/g
										g U/g
										g U/g
										g H/g
										g Mo/g
										g F/g
										SPEC.
										ASSAY
										C
										Sp. G.

16 [illegible]

RESULTS REPORTED ON SAMPLE AS RECEIVED BASIS UNLESS OTHERWISE NOTED.

REPT. BY	[illegible]
DATE	JUL 1 5 1983
METHOD OF ANAL.	[illegible]

REQUISITION 940371	CHECK(✓) DESIRED ANALYSIS
	g U/g
	g Li/g
	g D/g
	g H/g
	g Mo/g
	g F/g
	SPEC.
	ASSAY
	C
	Sp. G.

27 μci/gb

RESULTS REPORTED ON SAMPLE AS RECEIVED BASIS UNLESS OTHERWISE NOTED.

REPT BY	
DATE	7-12-83
METHOD OF ANAL.	

REQUISITION 40425

CHECK DESIRED ANALYSIS

	g U/g
	g Li/g
	g D/g
	g H/g
	g Mo/g
	g F/g
	SPEC.
	ASSAY
	C
	Sp. G.

4 μci/lb

RESULTS REPORTED ON SAMPLE AS RECEIVED BASIS UNLESS OTHERWISE NOTED.

REPT BY	
DATE	JUL 15 1983
METHOD OF ANAL.	

RA025-02

Y-12 PLANT LABORATORY REPORT

RECEIVED	REPORT DATE	TYPE REPORT	BATCH-NUMBER LOC	MTC	REQUISITION
09-30-83	09-30-83	FINAL	0040-00-6350	0040	940442

CHEMICAL ANALYSIS

PHYSICAL PROPERTIES

110.00 MCI/L TRITIUM (MICROCURIE/L)

RA025-02

Y-12 PLANT LABORATORY REPORT

RECEIVED	REPORT DATE	TYPE REPORT	BATCH-NUMBER LOC	MTC	REQUISITION
09-30-83	09-30-83	FINAL	0040-00-6366	0040	940472

CHEMICAL ANALYSIS

PHYSICAL PROPERTIES

120.00 MCI/L TRITIUM (MICROCURIE/L)

RA025-02 Y-12 PLANT LABORATORY REPORT

RECEIVED	REPORT DATE	TYPE REPORT	BATCH-NUMBER LOC	MTC	REQUISITION
09-30-83	09-30-83	FINAL	0040-00-6383	0040	940489

CHEMICAL ANALYSIS

PHYSICAL PROPERTIES

120.00 MCI/L TRITIUM (MICROCURIE/L)

RA025-02 Y-12 PLANT LABORATORY REPORT

RECEIVED	REPORT DATE	TYPE REPORT	BATCH-NUMBER LOC	MTC	REQUISITION
03-11-85	03-11-85	FINAL	0400-00-6847	0040	760047

CHEMICAL ANALYSIS

PHYSICAL PROPERTIES

390.00 MCI/L TRITIUM (MICROCURIE/L)

RA025-02 Y-12 PLANT LABORATORY REPORT

RECEIVED	REPORT DATE	TYPE REPORT	BATCH-NUMBER LOC	MTC	REQUISITIO
04-30-85	04-30-85	FINAL	0040-00-6872	0040	760134

CHEMICAL ANALYSIS PHYSICAL PROPERTIES

350.00 MCI/L TRITIUM (MICROCURIE/L)

RA025-02 Y-12 PLANT LABORATORY REPORT

RECEIVED	REPORT DATE	TYPE REPORT	BATCH-NUMBER LOC	MTC	REQUISITIO
04-30-85	04-30-85	FINAL	0040-00-6879	0040	760141

CHEMICAL ANALYSIS PHYSICAL PROPERTIES

370.00 MCI/L TRITIUM (MICROCURIE/L)

RA025-02 Y-12 PLANT LABORATORY REPORT

RECEIVED	REPORT DATE	TYPE REPORT	BATCH-NUMBER LOC	MTC	REQUISITIC
04-30-85	04-30-85	FINAL	0040-00-6887	0040	760149

CHEMICAL ANALYSIS PHYSICAL PROPERTIES

440.00 MCI/L TRITIUM (MICROCURIE/L)

RA025-02 Y-12 PLANT LABORATORY REPORT

RECEIVED	REPORT DATE	TYPE REPORT	BATCH-NUMBER LOC	MTC	REQUISITIC
04-30-85	04-30-85	FINAL	0040-00-6894	0040	760156

CHEMICAL ANALYSIS PHYSICAL PROPERTIES

390.00 MCI/L TRITIUM (MICROCURIE/L)

RA025-02

Y-12 PLANT LABORATORY REPORT

RECEIVED	REPORT DATE	TYPE REPORT	BATCH-NUMBER LOC	MTC	REQUISITION
05-22-85	05-22-85	FINAL	0040-00-6916	0040	760180

CHEMICAL ANALYSIS

PHYSICAL PROPERTIES

310.00 MCI/L TRITIUM (MICROCURIE/L)

RA025-02

Y-12 PLANT LABORATORY REPORT

RECEIVED	REPORT DATE	TYPE REPORT	BATCH-NUMBER LOC	MTC	REQUISITION
05-22-85	05-22-85	FINAL	0040-00-6901	0040	760165

CHEMICAL ANALYSIS

PHYSICAL PROPERTIES

300.00 MCI/L TRITIUM (MICROCURIE/L)

MEMO — AVOID ORAL INSTRUCTIONS

Date _____ 19 ____

To _____

11:15

TRITIUM RESULTS

Req. No. 760187 Not enough sample

Req. No. 760195 300 nanocuries/gram

Signed _____

CN-486
(2356 10-70)

	nano curies/gm
760198	310
760248	330
760255	280

REQUISITION 760187

CHECK DESIRED ANALYSIS

g U/g	
g U/g	
g D/g	
g H/g	
g Na/g	
g F/g	
SPEC.	
ASSAY	
C	
Sp. G.	
Vol. p	

Insufficient Sample

RESULTS REPORTED ON SAMPLE AS RECEIVED BASIS UNLESS OTHERWISE NOTED.

REPORTED BY	[illegible]
DATE	5-[illegible]
METHOD OF ANAL.	[illegible]

REQUISITION 760187

BATCH NO. 1040 INSERT 00 6923 LOC

"C" BANK

cyls 1 & 2

WORK REQUEST NO

COORDINATOR

REPORT TO W.A. Muenzer

BUILDING NO. 9204-2

PHONE NO. 4-2459

RA025-02 . . .

Y-12 PLANT LABORATORY REPORT

RECEIVED	REPORT DATE	TYPE REPORT	BATCH-NUMBER LOC	MTC	REQUISITION
09-30-83	09-30-83	FINAL	0040-00-6400	0040	777046

CHEMICAL ANALYSIS

PHYSICAL PROPERTIES

130.00 MCI/L TRITIUM (MICROCURIE/L)

RA025-02

Y-12 PLANT LABORATORY REPORT

RECEIVED	REPORT DATE	TYPE REPORT	BATCH-NUMBER LOC	MTC	REQUISITION
07-18-85	07-18-85	FINAL	0040-00-6931	0040	760195

CHEMICAL ANALYSIS

PHYSICAL PROPERTIES

300.00 MCI/L TRITIUM (MICROCURIE/L)

RA025-02 Y-12 PLANT LABORATORY REPORT

RECEIVED	REPORT DATE	TYPE REPORT	BATCH-NUMBER LOC	MTC	REQUISITION
09-30-83	09-30-83	FINAL	0040-00-6413	0040	777084

CHEMICAL ANALYSIS

PHYSICAL PROPERTIES

120.00 MCI/L TRITIUM (MICROCURIE/L)

RA025-02 Y-12 PLANT LABORATORY REPORT

RECEIVED	REPORT DATE	TYPE REPORT	BATCH-NUMBER LOC	MTC	REQUISITION
10-21-83	10-21-83	FINAL	0040-00-6434	0040	777115

CHEMICAL ANALYSIS

PHYSICAL PROPERTIES

200.00 MCI/L TRITIUM (MICROCURIE/L)

A025-02 Y-12 PLANT LABORATORY REPORT

RECEIVED	REPORT DATE	TYPE REPORT	BATCH-NUMBER LOC	MTC	REQUISITION
10-21-83	10-21-83	FINAL	0040-00-6446	0040	777127

CHEMICAL ANALYSIS

PHYSICAL PROPERTIES

250.00 MCI/L TRITIUM (MICROCURIE/L)

A025-02 Y-12 PLANT LABORATORY REPORT

RECEIVED	REPORT DATE	TYPE REPORT	BATCH-NUMBER LOC	MTC	REQUISITION
10-21-83	10-21-83	FINAL	0040-00-6453	0040	777139

CHEMICAL ANALYSIS

PHYSICAL PROPERTIES

340.00 MCI/L TRITIUM (MICROCURIE/L)

RA025-02 Y-12 PLANT LABORATORY REPORT

RECEIVED	REPORT DATE	TYPE REPORT	BATCH-NUMBER LOC	MTC	REQUISITION
12-08-83	12-08-83	FINAL	0040-00-6462	0040	777186

CHEMICAL ANALYSIS PHYSICAL PROPERTIES

290.00 MCI/L TRITIUM (MICROCURIE/L)

RA025-02 Y-12 PLANT LABORATORY REPORT

RECEIVED	REPORT DATE	TYPE REPORT	BATCH-NUMBER LOC	MTC	REQUISITION
12-08-83	12-08-83	FINAL	0040-00-6473	0040	777197

CHEMICAL ANALYSIS PHYSICAL PROPERTIES

340.00 MCI/L TRITIUM (MICROCURIE/L)

RA025-02 Y-12 PLANT LABORATORY REPORT

RECEIVED	REPORT DATE	TYPE REPORT	BATCH-NUMBER LOC	MTC	REQUISITION
12-08-83	12-08-83	FINAL	0040-00-6477	0040	777201

CHEMICAL ANALYSIS PHYSICAL PROPERTIES

360.00 MCI/L TRITIUM (MICROCURIE/L)

RA025-02 Y-12 PLANT LABORATORY REPORT

RECEIVED	REPORT DATE	TYPE REPORT	BATCH-NUMBER LOC	MTC	REQUISITION
01-24-84	01-24-84	FINAL	0040-00-6524	0040	777337

CHEMICAL ANALYSIS PHYSICAL PROPERTIES

360.00 MCI/L TRITIUM (MICROCURIE/L)

A025-02 Y-12 PLANT LABORATORY REPORT

RECEIVED	REPORT DATE	TYPE REPORT	BATCH-NUMBER LOC	MTC	REQUISITION
02-13-84	02-13-84	FINAL	0000-00-6529	0040	777342

CHEMICAL ANALYSIS

PHYSICAL PROPERTIES

370.00 MCI/L TRITIUM (MICROCURIE/L)

A025-02 Y-12 PLANT LABORATORY REPORT

RECEIVED	REPORT DATE	TYPE REPORT	BATCH-NUMBER LOC	MTC	REQUISITION
02-13-84	02-13-84	FINAL	0040-00-0351	0040	777364

CHEMICAL ANALYSIS

PHYSICAL PROPERTIES

390.00 MCI/L TRITIUM (MICROCURIE/L)

RA025-02 Y-12 PLANT LABORATORY REPORT

RECEIVED	REPORT DATE	TYPE REPORT	BATCH-NUMBER LOC	MTC	REQUISITION
02-29-84	04-02-84	FINAL	0040-00-6557	0040	777426

CHEMICAL ANALYSIS PHYSICAL PROPERTIES

370.00 MCI/L TRITIUM (MICROCURIE/L)

RA025-02 Y-12 PLANT LABORATORY REPORT

RECEIVED	REPORT DATE	TYPE REPORT	BATCH-NUMBER LOC	MTC	REQUISITION
04-19-84	04-19-84	FINAL	0040-00-6579	0040	777481

CHEMICAL ANALYSIS PHYSICAL PROPERTIES

400.00 MCI/L TRITIUM (MICROCURIE/L)

RA025-02 Y-12 PLANT LABORATORY REPORT

RECEIVED	REPORT DATE	TYPE REPORT	BATCH-NUMBER LOC	MTC	REQUISITION
04-19-84	04-19-84	FINAL	0040-00-6593	0040	777496

CHEMICAL ANALYSIS PHYSICAL PROPERTIES

410.00 MCI/L TRITIUM (MICROCURIE/L)

RA025-02 Y-12 PLANT LABORATORY REPORT

RECEIVED	REPORT DATE	TYPE REPORT	BATCH-NUMBER LOC	MTC	REQUISITION
04-25-84	04-25-84	FINAL	0040-00-6603	0040	777556

CHEMICAL ANALYSIS PHYSICAL PROPERTIES

390.00 MCI/L TRITIUM (MICROCURIE/L)

RA025-02

Y-12 PLANT LABORATORY REPORT

RECEIVED	REPORT DATE	TYPE REPORT	BATCH-NUMBER LOC	MTC	REQUISITION
05-21-84	05-21-84	FINAL	0040-00-6610	0040	777557

CHEMICAL ANALYSIS

PHYSICAL PROPERTIES

390.00 MCI/L TRITIUM (MICROCURIE/L)

390.00 nCi/g ?

this is nCi/g as per conversation with Ken Pickle by telephone on 5-30-8

42958

RA025-02

Y-12 PLANT LABORATORY REPORT

RECEIVED	REPORT DATE	TYPE REPORT	BATCH-NUMBER LOC	MTC	REQUISITION
06-04-84	06-04-84	FINAL	0040-00-6637	0040	777626

CHEMICAL ANALYSIS

PHYSICAL PROPERTIES

410.00 MCI/L TRITIUM (MICROCURIE/L)

RA025-02 Y-12 PLANT LABORATORY REPORT

RECEIVED	REPORT DATE	TYPE REPORT	BATCH-NUMBER LOC	MTC	REQUISITION
07-25-84	07-25-84	FINAL	0040-00-6647	0040	777682

CHEMICAL ANALYSIS

PHYSICAL PROPERTIES

360.00 MCI/L TRITIUM (MICROCURIE/L)

RA025-02 Y-12 PLANT LABORATORY REPORT

RECEIVED	REPORT DATE	TYPE REPORT	BATCH-NUMBER LOC	MTC	REQUISITION
07-25-84	07-25-84	FINAL	0040-00-6662	0040	777697

CHEMICAL ANALYSIS

PHYSICAL PROPERTIES

450.00 MCI/L TRITIUM (MICROCURIE/L)

RAD25-02 Y-12 PLANT LABORATORY REPORT

RECEIVED	REPORT DATE	TYPE REPORT	BATCH-NUMBER	LOC	MTG	ELEVATION
07-26-85	07-26-85	FINAL	9040-00-8678	9040	[illegible]	[illegible]

CHEMICAL ANALYSIS

PHYSICAL PROPERTIES

450.00 MCI/L TRITIUM (MICROCURIES/L)

REQUISITION 77786

CHECK DESIRED ANALYSIS
g U/g
g Li/g
g D/g
g H/g
g Mo/g
g F/g
SPEC.
ASSAY
C
Sp. G.
Vol. p

350 NCi/g

tritium

RESULTS REPORTED ON SAMPLE AS RECEIVED BASIS UNLESS OTHERWISE NOTED.

REPT. BY	DP
DATE	9-18-84
METHOD OF ANAL.	

REQUISITION 77753

CHECK DESIRED ANALYSIS
g U/g
g Li/g
g D/g
g H/g
g Mo/g
g F/g
SPEC.
ASSAY
C
Sp. G.
Vol. p

230 NCi/g

tritium

RESULTS REPORTED ON SAMPLE AS RECEIVED BASIS UNLESS OTHERWISE NOTED.

REPT. BY	DP
DATE	7-30-84
METHOD OF ANAL.	

REQUISITION 77746

CHECK DESIRED ANALYSIS
g U/g
g Li/g
g D/g
g H/g
g Mo/g
g F/g
SPEC.
ASSAY
C
Sp. G.
Vol. p

230 NCi/g

tritium

RESULTS REPORTED ON SAMPLE AS RECEIVED BASIS UNLESS OTHERWISE NOTED.

REPT. BY	DP
DATE	7-30-84
METHOD OF ANAL.	

REQUISITION 77827

CHECK DESIRED ANALYSIS
g U/g
g Li/g
g D/g
g H/g
g Mo/g
g F/g
SPEC.
ASSAY
C
Sp. G.
Vol. p

340 Ci/g

RESULTS REPORTED ON SAMPLE AS RECEIVED BASIS UNLESS OTHERWISE NOTED.

REPT. BY	DP
DATE	11-2-84
METHOD OF ANAL.	

REQUISITION 77839

CHECK DESIRED ANALYSIS
g U/g
g Li/g
g D/g
g H/g
g Mo/g
g F/g
SPEC.
ASSAY
C
Sp. G.
Vol. p

310 Ci/g

RESULTS REPORTED ON SAMPLE AS RECEIVED BASIS UNLESS OTHERWISE NOTED.

REPT. BY	DP
DATE	11-2-84
METHOD OF ANAL.	

REQUISITION 77847

CHECK DESIRED ANALYSIS
g U/g
g Li/g
g D/g
g H/g
g Mo/g
g F/g
SPEC.
ASSAY
C
Sp. G.
Vol. p

340 Ci/g

RESULTS REPORTED ON SAMPLE AS RECEIVED BASIS UNLESS OTHERWISE NOTED.

REPT. BY	DP
DATE	11-2-84
METHOD OF ANAL.	

REQUISITION 777852

CHECK DESIRED ANALYSIS
g U/g
g Li/g
g D/g
g H/g
g Mo/g
g F/g
SPEC.
ASSAY
C
Sp. G.
Vol. p

360 Nci/g

Tritium

RESULTS REPORTED ON SAMPLE AS RECEIVED BASIS UNLESS OTHERWISE NOTED.

REPT. BY	DP
DATE	12-19-84
METHOD OF ANAL.	

REQUISITION 777886

CHECK DESIRED ANALYSIS
g U/g
g Li/g
g D/g
g H/g
g Mo/g
g F/g
SPEC.
ASSAY
C
Sp. G.
Vol. p

No sample

RESULTS REPORTED ON SAMPLE AS RECEIVED BASIS UNLESS OTHERWISE NOTED.

REPT. BY	DP
DATE	12-19-84
METHOD OF ANAL.	

REQUISITION 777878

CHECK DESIRED ANALYSIS
g U/g
g Li/g
g D/g
g H/g
g Mo/g
g F/g
SPEC.
ASSAY
C
Sp. G.
Vol. p

340 NCI/g

Tritium

RESULTS REPORTED ON SAMPLE AS RECEIVED BASIS UNLESS OTHERWISE NOTED.

REPT. BY	DP
DATE	12-19-84
METHOD OF ANAL.	

RA025-02 Y-12 PLANT LABORATORY REPORT

RECEIVED	REPORT DATE	TYPE REPORT	BATCH-NUMBER LOC	MTC	REQUISITIO
07-23-85	07-23-85	FINAL	0040-00-6944	0040	760248

CHEMICAL ANALYSIS PHYSICAL PROPERTIES

330.00 MCI/L TRITIUM (MICROCURIE/L)

RA025-02 Y-12 PLANT LABORATORY REPORT

RECEIVED	REPORT DATE	TYPE REPORT	BATCH-NUMBER LOC	MTC	REQUISITIO
09-09-85	09-09-85	FINAL	0040-00-7008	0040	760377

CHEMICAL ANALYSIS PHYSICAL PROPERTIES

190.00 MCI/L TRITIUM (MICROCURIE/L)

RA025-02 Y-12 PLANT LABORATORY REPORT

RECEIVED	REPORT DATE	TYPE REPORT	BATCH-NUMBER LOC	MTC	REQUISITIO
09-09-85	09-09-85	FINAL	0040-00-7017	0040	760386

CHEMICAL ANALYSIS

PHYSICAL PROPERTIES

230.00 MCI/L TRITIUM (MICROCURIE/L)

RA025-02 Y-12 PLANT LABORATORY REPORT

RECEIVED	REPORT DATE	TYPE REPORT	BATCH-NUMBER LOC	MTC	REQUISITION
08-20-85	08-20-85	FINAL	040- -6958	0040	760275

CHEMICAL ANALYSIS

PHYSICAL PROPERTIES

210.00 MCI/L TRITIUM (MICROCURIE/L)

RA025-02 Y-12 PLANT LABORATORY REPORT

RECEIVED	REPORT DATE	TYPE REPORT	BATCH-NUMBER LOC	MTC	REQUISITIO
08-20-85	08-20-85	FINAL	0040-00-6975	0040	760342

CHEMICAL ANALYSIS

PHYSICAL PROPERTIES

240.00 MCI/L TRITIUM (MICROCURIE/L)

RA025-02 Y-12 PLANT LABORATORY REPORT

RECEIVED	REPORT DATE	TYPE REPORT	BATCH-NUMBER LOC	MTC	REQUISITION
08-20-85	08-20-85	FINAL	040- -6984	0040	760352

CHEMICAL ANALYSIS

PHYSICAL PROPERTIES

210.00 MCI/L TRITIUM (MICROCURIE/L)

RA025-02 Y-12 PLANT LABORATORY REPORT

RECEIVED	REPORT DATE	TYPE REPORT	BATCH-NUMBER LOC	MTC	REQUISITION
08-20-85	08-20-85	FINAL	040-00-6994	0040	760362

CHEMICAL ANALYSIS

PHYSICAL PROPERTIES

210.00 MCI/L TRITIUM (MICROCURIE/L)

RA025-02 Y-12 PLANT LABORATORY REPORT

RECEIVED	REPORT DATE	TYPE REPORT	BATCH-NUMBER LOC	MTC	REQUISITION
08-20-85	08-20-85	FINAL	0040-00-6970	0040	760337

CHEMICAL ANALYSIS

PHYSICAL PROPERTIES

240.00 MCI/L TRITIUM (MICROCURIE/L)

RA025-02

Y-12 PLANT LABORATORY REPORT

RECEIVED	REPORT DATE	TYPE REPORT	BATCH-NUMBER LOC	MTC	REQUISITION
07-23-85	07-23-85	FINAL	0040-00-6950	0040	760255

CHEMICAL ANALYSIS

PHYSICAL PROPERTIES

280.00 MCI/L TRITIUM (MICROCURIE/L)

REQUISITION 22e777

CHECK DESIRED ANALYSIS
g U/g
g Li/g
g D/g
g H/g
g Na/g
g F/g
SPEC.
ASSAY
C
Sp. G.
Vol. p

350 Nci/g

Tritium

RESULTS REPORTED ON SAMPLE AS RECEIVED BASIS UNLESS OTHERWISE NOTED.

REPT. BY	DP
DATE	2-25-85
METHOD OF ANAL.	

REQUISITION 760008

CHECK DESIRED ANALYSIS
g U/g
g Li/g
g D/g
g H/g
g Mo/g
g F/g
SPEC.
ASSAY
C
Sp. G.
Vol. p

340 Nci/g

Tritium

RESULTS REPORTED ON SAMPLE AS RECEIVED BASIS UNLESS OTHERWISE NOTED.

REPT. BY	DP
DATE	2-25-85
METHOD OF ANAL.	

REQUISITION 760015

CHECK DESIRED ANALYSIS
g U/g
g Li/g
g D/g
g H/g
g Mo/g
g F/g
SPEC.
ASSAY
C
Sp. G.
Vol. p

350 Nci/g

Tritium

RESULTS REPORTED ON SAMPLE AS RECEIVED BASIS UNLESS OTHERWISE NOTED.

REPT. BY	DP
DATE	2-25-85
METHOD OF ANAL.	

REQUISITION 760001

CHECK DESIRED ANALYSIS
g U/g
g Li/g
g D/g
g H/g
g Mo/g
g F/g
SPEC.
ASSAY
C
Sp. G.
Vol. p

340 Nci/g

Tritium

RESULTS REPORTED ON SAMPLE AS RECEIVED BASIS UNLESS OTHERWISE NOTED.

REPT. BY	DP
DATE	2-25-85
METHOD OF ANAL.	

RA025-02

Y-12 PLANT LABORATORY REPORT

RECEIVED	REPORT DATE	TYPE REPORT	BATCH-NUMBER LOC	MTC	REQUISITIO
10-07-85	10-07-85	FINAL	0040-00-7039	0040	760408

CHEMICAL ANALYSIS

PHYSICAL PROPERTIES

180.00 MCI/L TRITIUM (MICROCURIE/L)

-02

Y-12 PLANT LABORATORY REPORT

CEIVED	REPORT DATE	TYPE REPORT	BATCH-NUMBER LOC	MTC	REQUISITION
01-22-86	01-22-86	FINAL	0040-00-7074	0040	760519

CHEMICAL ANALYSIS

PHYSICAL PROPERTIES

INSF MAMCI/L TRITIUM (MICROCURIE/L)

RA025-02 Y-12 PLANT LABORATORY REPORT

RECEIVED	REPORT DATE	TYPE REPORT	BATCH-NUMBER LOC	MTC	REQUISITION
03-27-84	03-28-84	FINAL	0050-LO-8463	0050	777474

CHEMICAL ANALYSIS

PHYSICAL PROPERTIES

4.50 MCI/L TRITIUM (MICROCURIE/L)

RA025-02 Y-12 PLANT LABORATORY REPORT

RECEIVED	REPORT DATE	TYPE REPORT	BATCH-NUMBER LOC	MTC	REQUISITION
01-22-86	01-22-86	FINAL	0000-00-7082	0040	760527

CHEMICAL ANALYSIS

PHYSICAL PROPERTIES

230.00 MCI/L TRITIUM (MICROCURIE/L)

1982 1988

RA025-02 Y-12 PLANT LABORATORY REPORT

RECEIVED	REPORT DATE	TYPE REPORT	BATCH-NUMBER LOC	MTC	REQUISITION
02-21-86	02-21-86	FINAL	0040-00-7143	0040	760589

CHEMICAL ANALYSIS

PHYSICAL PROPERTIES

150.00 MCI/L TRITIUM (MICROCURIE/L)

RA025-02 Y-12 PLANT LABORATORY REPORT

RECEIVED	REPORT DATE	TYPE REPORT	BATCH-NUMBER LOC	MTC	REQUISITION
02-21-86	02-21-86	FINAL	- -7151	0040	760597

CHEMICAL ANALYSIS

PHYSICAL PROPERTIES

150.00 MCI/L TRITIUM (MICROCURIE/L)

RA025-02 Y-12 PLANT LABORATORY REPORT

RECEIVED	REPORT DATE	TYPE REPORT	BATCH-NUMBER LOC	MTC	REQUISITION
02-21-86	02-21-86	FINAL	0040-00-7157	0040	760603

CHEMICAL ANALYSIS

PHYSICAL PROPERTIES

140.00 MCI/L TRITIUM (MICROCURIE/L)

RA025-02 Y-12 PLANT LABORATORY REPORT

RECEIVED	REPORT DATE	TYPE REPORT	BATCH-NUMBER LOC	MTC	REQUISITION
02-21-86	02-21-86	FINAL	0040-00-7164	0040	760510

CHEMICAL ANALYSIS

PHYSICAL PROPERTIES

130.00 MCI/L TRITIUM (MICROCURIE/L)

RA025-02

Y-12 PLANT LABORATORY REPORT

RECEIVED	REPORT DATE	TYPE REPORT	BATCH-NUMBER LOC	MTC	REQUISITIO
07-23-85	07-23-85	FINAL	0040-00-6934	0040	760198

CHEMICAL ANALYSIS

PHYSICAL PROPERTIES

310.00 MCI/L TRITIUM (MICROCURIE/L)

REQUISITION 77792 8

CHECK DESIRED ANALYSIS
g U/g
g Li/g
g D/g
g H/g
g Mo/g
g F/g
SPEC.
ASSAY
C
Sp. G.
Vol. p

340 NCi/g

RESULTS REPORTED ON SAMPLE AS RECEIVED BASIS UNLESS OTHERWISE NOTED.

REPT. BY	DP
TE	1-11-84
D	

REQUISITION 77 7 3 3

CHECK DESIRED ANALYSIS
g U/g
g Li/g
g D/g
g H/g
g Mo/g
g F/g
SPEC.
ASSAY
C
Sp. G.
Vol p

380 NCi/g

RESULTS REPORTED ON SAMPLE AS RECEIVED BASIS UNLESS OTHERWISE NOTED.

REPT. BY	DP
DATE	1-11-84
METHOD OF ANAL.	

RAU25-J2 Y-12 PLANT LABORATORY REPORT

RECEIVED	REPORT DATE	TYPE REPORT	BATCH-NUMBER LOC	MTC	REQUISIT
9-13-89	09-25-90	CORRCTN	0043-00-2323	0040	761017

CHEMICAL ANALYSIS PHYSICAL PROPERTIES

120 NCI/G TRITIUM (NANOCURIE/G)

RAU25-J2 Y-12 PLANT LABORATORY REPORT

RECEIVED	REPORT DATE	TYPE REPORT	BATCH-NUMBER LOC	MTC	REQUISIT
09-13-90	09-25-90	CORRCT	0043-00-2323	0040	761017

CHEMICAL ANALYSIS PHYSICAL PROPERTIES

140 NCI/G TRITIUM (NANOCURIE/G)

RAD25-D Y-12 PLANT LABORATORY REPORT

RECEIVED	REPORT DATE	TYPE REPORT	BATCH-NUMBER LOC	MTC	REQUISIT
09-23-[illegible]	09-23-[illegible]	CORRCTN	0040-00-2284	0040	7[illegible]

CHEMICAL ANALYSIS PHYSICAL PROPERTI

140 NCI/G TRITIUM (NANOCURI/G)

RAD25-D Y-12 PLANT LABORATORY REPORT

RECEIVED	REPORT DATE	TYPE REPORT	BATCH-NUMBER LOC	MTC	REQUISIT
09-13-[illegible]	09-[illegible]	CORRCTN	0040-[illegible]-2304	0040	7[illegible]

CHEMICAL ANALYSIS PHYSICAL PROPERTI

130 NCI/G TRITIUM (NANOCURI/G)

RA025-0[illegible]

Y-12 PLANT LABORATORY REPORT

RECEIVED	REPORT DAT	TYPE REPORT	BATCH-NUMBER LOC	MTC	REQUISTI[illegible]
09-23-86	09-23-86	CORRCTN	0040-00-2314	0040	7610[illegible]

CHEMICAL ANALYSIS

PHYSICAL PROPERTIES

130 NCI/G TRITIUM (NANOCURIE/G)

RA025-02

Y-12 PLANT LABORATORY REPORT

RECEIVED	REPORT DATE	TYPE REPORT	BATCH-NUMBER LOC	MTC	REQUISITION
08-25-86	08-25-86	FINAL	0040-00-2284	0040	760978

CHEMICAL ANALYSIS

PHYSICAL PROPERTIES

140.00 MCI/L TRITIUM (MICROCURIE/L)

Ed White
4-2904
Plant Lab.

RA025-02 Y-12 PLANT LABORATORY REPORT

RECEIVED	REPORT DATE	TYPE REPORT	BATCH-NUMBER LOC	MTC	REQUISITION
08-25-86	08-25-86	FINAL	0040-00-2292	0040	760986

CHEMICAL ANALYSIS PHYSICAL PROPERTIES

140.00 MCI/L TRITIUM (MICROCURIE/L)

RA025-02 Y-12 PLANT LABORATORY REPORT

RECEIVED	REPORT DATE	TYPE REPORT	BATCH-NUMBER LOC	MTC	REQUISITION
08-25-86	08-25-86	FINAL	0040-00-2300	0040	760994

CHEMICAL ANALYSIS PHYSICAL PROPERTIES

130.00 MCI/L TRITIUM (MICROCURIE/L)

RA025-02 Y-12 PLANT LABORATORY REPORT

RECEIVED	REPORT DATE	TYPE REPORT	BATCH-NUMBER	LOC	MTC	REQUISITION
08-25-86	08-25-86	FINAL	0040-00-2304		0040	760998

CHEMICAL ANALYSIS PHYSICAL PROPERTIES

130.00 MCI/L TRITIUM (MICROCURIE/L)

RA025-02 Y-12 PLANT LABORATORY REPORT

RECEIVED	REPORT DATE	TYPE REPORT	BATCH-NUMBER	LOC	MTC	REQUISITION
08-25-86	08-25-86	FINAL	0040-00-2314		0040	761008

CHEMICAL ANALYSIS PHYSICAL PROPERTIES

130.00 MCI/L TRITIUM (MICROCURIE/L)

RA025-02 Y-12 PLANT LABORATORY REPORT

RECEIVED	REPORT DATE	TYPE REPORT	BATCH-NUMBER LOC	MTC	REQUISITION
08-25-86	08-25-86	FINAL	0040-00-7323	0040	761017

CHEMICAL ANALYSIS

PHYSICAL PROPERTIES

120.00 MCI/L TRITIUM (MICROCURIE/L)

RA025-02 Y-12 PLANT LABORATORY REPORT

RECEIVED	REPORT DATE	TYPE REPORT	BATCH-NUMBER LOC	MTC	REQUISITI
10-09-86	10-10-86	FINAL	0040-00-7353	0040	761048

CHEMICAL ANALYSIS

PHYSICAL PROPERTIES

93.00 ~~MCI/L~~ TRITIUM (~~MICROCURIE~~/L)

Nano Curies/gram

RA025-02 Y-12 PLANT LABORATORY REPORT

RECEIVED	REPORT DATE	TYPE REPORT	BATCH-NUMBER LOC	MTC	REQUISITI
10-09-86	10-10-86	FINAL	0040-00-7364	0040	761084

CHEMICAL ANALYSIS PHYSICAL PROPERTIES

98.00 ~~MCI/L~~ TRITIUM (MI~~CROCURIE~~/L)

nano curies/gram

RA025-02 Y-12 PLANT LABORATORY REPORT

RECEIVED	REPORT DATE	TYPE REPORT	BATCH-NUMBER LOC	MTC	REQUISITI
10-09-86	10-10-86	FINAL	0040-00-7371	0040	761091

CHEMICAL ANALYSIS PHYSICAL PROPERTIES

100.00 ~~MCI/L~~ TRITIUM (MI~~CROCURIE~~/L)

nano curies/gram

RA025-02 Y-12 PLANT LABORATORY REPORT

RECEIVED	REPORT DATE	TYPE REPORT	BATCH-NUMBER LOC	MTC	REQUISIT
10-09-86	10-10-86	FINAL	- -7376	0040	761096

CHEMICAL ANALYSIS PHYSICAL PROPERTIES

95.00 ~~NCI/L~~ ~~TRITIUM (MICROCURIE~~/L)

Nano Curies/gm

RA025-02 Y-12 PLANT LABORATORY REPORT

RECEIVED	REPORT DATE	TYPE REPORT	BATCH-NUMBER LOC	MTC	REQUISIT
10-16-86	10-16-86	CORRCTN	0040-00-7353	0040	761043

CHEMICAL ANALYSIS PHYSICAL PROPERTIES

93 NCI/G TRITIUM (NANOCURIES/G)

RA025-02 Y-12 PLANT LABORATORY REPORT

RECEIVED	REPORT DATE	TYPE REPORT	BATCH-NUMBER LOC	MTC	REQUISIT
10-16-86	10-16-86	CORRCTN	0040-00-7364	0040	761084

CHEMICAL ANALYSIS PHYSICAL PROPERTIES

98 NCI/G TRITIUM (NANOCURIE/G)

RA025-02 Y-12 PLANT LABORATORY REPORT

RECEIVED	REPORT DATE	TYPE REPORT	BATCH-NUMBER LOC	MTC	REQUISIT
10-16-86	10-16-86	CORRCTN	0040-00-7371	0040	761091

CHEMICAL ANALYSIS PHYSICAL PROPERTIES

100 NCI/G TRITIUM (NANOCURIE/G)

RA025-02 Y-12 PLANT LABORATORY REPORT

RECEIVED	REPORT DATE	TYPE REPORT	BATCH-NUMBER	LOC	MTC	REQUISITI
10-31-86	11-07-86	FINAL	0040-00-7394		0040	761116

CHEMICAL ANALYSIS PHYSICAL PROPERTIES

100 NCI/G TRITIUM (NANOCURIE/

RA025-02 Y-12 PLANT LABORATORY REPORT

RECEIVED	REPORT DATE	TYPE REPORT	BATCH-NUMBER	LOC	MTC	REQUISITI(
10-31-86	11-07-86	FINAL	0040-00-7402		0040	761124

CHEMICAL ANALYSIS PHYSICAL PROPERTIES

110 NCI/G TRITIUM (NANOCURIE/G

RA025-02

Y-12 PLANT LABORATORY REPORT

RECEIVED	REPORT DATE	TYPE REPORT	BATCH-NUMBER	LOC	MTC	REQUISITIO
11-04-86	11-07-86	FINAL	0040-00-7406		0040	761153

CHEMICAL ANALYSIS

PHYSICAL PROPERTIES

100 NCI/G TRITIUM (NANOCURIE/G

050

RA025-02 Y-12 PLANT LABORATORY REPORT

RECEIVED	REPORT DATE	TYPE REPORT	BATCH-NUMBER	LOC	MTC	REQUISITION
02-12-86	03-11-86	FINAL	050-EP-0805	1	0050	760498

CHEMICAL ANALYSIS

.200834 G/G D
< .010 PPM HG
.998169 G/G D20
79 PPM TURBID SIO2 EQ

PHYSICAL PROPERTIES

< .004 MCI/L GAMMA ACTIVITY

PHYSICAL PROPERTIES

9.3		PH
64.00	MI/HOS	SPECIF COND (MICROMHOS
[illegible]	MIG/ML	KMNO4 DEMAND MICROG/ML
< .002	MCI/L	ALPHA ACTIVITY
< .004	MCI/L	BETA ACTIVITY
225.00	MCI/L	TRITIUM (MICROCURIE/L)
99.7970	ATOM %	D

SPECTROGRAPHIC ANALYSIS

PLATE SHEET(S): C055o, HHH01
SPECTROCHEMICAL METHOD (SEE LEGEND BELOW)
REPORT UNIT: MICRO-G/ML REPORT BASIS: AS RECEIVED

*AG	.2	*AL	< 1.5	*AS	< 3	#AU	< .01	*B	< .2	*BA	< .01
BE		BI		BR		*CA	< 1	*CD	< .1	*CO	< .1
*CR	< .1	CS		*CU	< .05	*FE	< .3	GA		GE	
HF		HG		IN		[illegible]		*K	< 5	*LI	< [illegible]
*MG	< 1	*MN	< .03	*MO	< .4	*NA	1.1	*NB	< .3	*NI	< [illegible]
NP		OS		*P	< 1	*PB	< 1	PD		PT	
PU		RB		RE		RH		RU		S	
SB		SC		SE		*SI	< 1	SN		*SR	< .01
TA		TE		TH		*TI	< .05	TL		U	
*V	< .2	W		*Y	< .03	*ZN	< .1	*ZR	< .1		
CL		F		I		PA		AM		CM	
CE		#DY	< .08	ER		#EU	< .02	#GD	< .04	HO	
LA		LU		ND		PR		#SM	< .03	TB	
TM		YB									

IS DC-ARC ANSWER
* IS ICP ANSWER
A BLANK IS SSMS

RA025-02

Y-12 PLANT LABORATORY REPORT

RECEIVED	REPORT DATE	TYPE REPORT	BATCH-NUMBER	LOC	MTC	REQUISITION
02-12-86	03-11-86	FINAL	050-EP-1800	1	0050	760500

CHEMICAL ANALYSIS

.201000 G/G D
< .010 PPM HG
.993997 G/G D20
93 PPM TURBID SIO2 EQ

PHYSICAL PROPERTIES

< .004 MCI/L GAMMA ACTIVITY

PHYSICAL PROPERTIES

< 9.9		PH
> 99.99	MI/HOS	SPECIF COND (MICROMHOS
69.4	MIG/ML	KMNO4 DEMAND MICROG/ML
< .002	MCI/L	ALPHA ACTIVITY
< .004	MCI/L	BETA ACTIVITY
243.00	MCI/L	TRITIUM (MICROCURIES/L)
99.3890	ATOM %	D

SPECTROGRAPHIC ANALYSIS

PLATE SHEET(S): CD556, HHH01
SPECTROCHEMICAL METHOD (SEE LEGEND BELOW)
REPORT UNIT: MICRO-G/ML REPORT BASIS: AS RECEIVED

*AG	.2	*AL	< 1.5	*AS	< 3	#AU	< .01	*B	< .2	*BA	< .01
BE		BI		BR		*CA	< 1	*CD	< .1	*CO	< .1
*CR	< .1	CS		*CU	< .05	*FE	< .3	GA		GE	
HF		HG		IN		IR		*K	57	*LI	< .03
*MG	< 1	*MN	.04	*MO	< .4	*NA	790	*NB	< .3	*NI	< .2
NP		OS		*P	< 1	*PB	< 1	PD		PT	
PU		RB		RE		RH		RU		S	
SB		SC		SE		*SI	1	SN		*SR	< .01
TA		TE		TH		*TI	< .05	TL		U	
*V	< .2	W		*Y	< .03	*ZN	< .1	*ZR	< .1		
CL		F		I		PA		AM		CM	
CE		#DY	< .08	ER		#EU	< .02	#GD	< .04	HO	
LA		LU		ND		PR		#SM	< .08	TB	
TM		YB									

IS DC-ARC ANSWER
* IS ICP ANSWER
A BLANK IS SSMS

RA025-02 Y-12 PLANT LABORATORY REPORT

RECEIVED	REPORT DATE	TYPE REPORT	BATCH-NUMBER	LOC	MTC	REQUISITION
02-12-86	03-11-86	FINAL	05D-EP-1800	1	0050	760652

CHEMICAL ANALYSIS

.200993 G/G D
< .010 PPM HG
.998962 G/G D2O
6 PPM TURBID SIO2 EQ

PHYSICAL PROPERTIES

< .004 MCI/L GAMMA ACTIVITY

PHYSICAL PROPERTIES

< 9.9		PH
> 99.99	MI/HOS	SPECIF COND (MICROMHOS
< 4.0	MIG/ML	KMNO4 DEMAND MICROG/ML
< .002	MCI/L	ALPHA ACTIVITY
< .004	MCI/L	BETA ACTIVITY
69.40	MCI/L	TRITIUM (MICROCURIE/L)
99.3350	ATOM %	D

SPECTROGRAPHIC ANALYSIS

PLATE SHEET(S): C0556, HHHD1
SPECTROCHEMICAL METHOD (SEE LEGEND BELOW)
REPORT UNIT: MICRO-G/ML REPORT BASIS: AS RECEIVED

*AG	< .2	*AL	< 1.5	*AS	< 3	#AU	< .01	*B	< .2	*BA	< .01
BE		BI		BR		*CA	< 1	*CD	< .1	*CO	< .1
*CR	< .1	CS		*CU	< .05	*FE	< .3	GA		GE	
HF		HG		IN		IR		*K	63	*LI	.05
*MG	< 1	*MN	< .03	*MO	< .4	*NA	940	*NB	< .3	*NI	< .2
NP		OS		*P	< 1	*PB	< 1	PD		PT	
PU		RB		RE		RH		RU		S	
SB		SC		SE		*SI	< 1	SN		*SR	< .01
TA		TE		TH		*TI	< .05	TL		U	
*V	< .2	W		*Y	< .03	*ZN	< .1	*ZR	< .1		
CL		F		I		PA		AM		CM	
CE		#DY	< .08	ER		#EU	< .02	#GD	< .04	HO	
LA		LU		ND		PR		#SM	< .03	TB	
TM		YB									

IS DC-ARC ANSWER
* IS ICP ANSWER
A BLANK IS SSMS

:025-02

Y-12 PLANT LABORATORY REPORT

RECEIVED	REPORT DATE	TYPE REPORT	BATCH-NUMBER	LOC	MTC	REQUISITION
2-12-86	03-11-86	FINAL	050-EP-0700	1	0050	760654

CHEMICAL ANALYSIS

.200052 G/G D
< .010 PPM HG
.994235 G/G D20
86 PPM TURBID SIO2 EQ

PHYSICAL PROPERTIES

< .004 MCI/L GAMMA ACTIVITY

PHYSICAL PROPERTIES

8.6		PH
> 99.99	MI/HOS	SPECIF COND (MICROMHOS
40.2	MIG/ML	KMNO4 DEMAND MICROG/ML
< .002	MCI/L	ALPHA ACTIVITY
< .004	MCI/L	BETA ACTIVITY
20.60	MCI/L	TRITIUM (MICROCURIE/L)
99.3650	ATOM %	D

SPECTROGRAPHIC ANALYSIS

DATE SHEET(S): C0556, HHH01
SPECTROCHEMICAL METHOD (SEE LEGEND BELOW)
REPORT UNIT: MICRO-G/ML REPORT BASIS: AS RECEIVED

	< .2	*AL	< 1.5	*AS	< 3	#AU	< .01	*B	< .2	*BA	< .01
		BI		BR		*CA	< 1	*CD	< .1	*CO	< .1
CR	< .1	CS		*CU	.08	*FE	< .3	GA		GE	
HF		HG		IN		IR		*K	7	*LI	< .03
MG	< 1	*MN	< .03	*MO	< .4	*NA	120	*NB	< .3	*NI	< .2
NP		OS		*P	3	*PB	< 1	PD		PT	
RU		RB		RE		RH		RU		S	
SB		SC		SE		*SI	2	SN		*SR	< .01
TA		TE		TH		*TI	< .05	TL		U	
V	< .2	W		*Y	< .03	*ZN	< .1	*ZR	< .1		
AL		F		I		PA		AM		CM	
DE		#DY	< .08	ER		#EU	< .02	#GD	< .04	HO	
LA		LU		ND		PR		#SM	< .08	TB	
YB		YB									

IS DC-ARC ANSWER
IS ICP ANSWER
BLANK IS SSMS

RA025-02

Y-12 PLANT LABORATORY REPORT

RECEIVED	REPORT DATE	TYPE REPORT	BATCH-NUMBER	LOC	MTC	REQUISITION
02-12-86	03-11-86	FINAL	050-EP-0200	1	0050	760656

CHEMICAL ANALYSIS

< .010 PPM HG
25 PPM TURBID SIO2 EQ

PHYSICAL PROPERTIES

< .004 MCI/L GAMMA ACTIVITY

PHYSICAL PROPERTIES

< 9.9		PH
> 99.99	MI/HOS	SPECIF COND (MICROMHOS
> 99.9	MIG/ML	KMNO4 DEMAND MICROG/ML
< .002	MCI/L	ALPHA ACTIVITY
< .004	MCI/L	BETA ACTIVITY
115.00	MCI/L	TRITIUM (MICROCURIE/L)

SPECTROGRAPHIC ANALYSIS

PLATE SHEET(S): C0556, HHH01
SPECTROCHEMICAL METHOD (SEE LEGEND BELOW)
REPORT UNIT: MICRO-G/ML REPORT BASIS: AS RECEIVED

*AG	< .2	*AL	< 1.5	*AS	< 3	#AU	< .1	*B	7.2	*BA	< .01
BE		BI		BR		*CA	1	*CD	< .1	*CO	< .1
*CR	< .1	CS		*CU	.24	*FE	2.4	GA		GE	
HF		HG		IN		IR		*K	5500	*LI	.05
*MG	< 1	*MN	.12	*MO	< .4	*NA	50000	*NB	< .3	*NI	< .3
NP		OS		*P	3	*PB	< 1	PD		PT	
PU		RB		RE		RH		RU		S	
SB		SC		SE		*SI	110	SN		*SR	< .01
TA		TE		TH		*TI	< .05	TL		U	
*V	< .2	W		*Y	< .03	*ZN	3.5	*ZR	< .1		
CL		F		I		PA		AM		CM	
CE		#DY	< 9	ER		#EU	< 2	#GD	< 4	HO	
LA		LU		ND		PR		#SM	< 3	TB	
TM		YB									

IS DC-ARC ANSWER
* IS ICP ANSWER
A BLANK IS SSMS

RA025-02 Y-12 PLANT LABORATORY REPORT

RECEIVED	REPORT DATE	TYPE REPORT	BATCH-NUMBER	LOC	MTC	REQUISITION
02-12-86	03-11-86	FINAL	050-EP-0805	1	0050	760658

CHEMICAL ANALYSIS

.200580 G/G D
< .010 PPM HG
.996910 G/G D20
147 PPM TURBID SIO2 EQ

PHYSICAL PROPERTIES

< .004 MCI/L GAMMA ACTIVITY

PHYSICAL PROPERTIES

8.3		PH
95.00	MI/HOS	SPECIF COND (MICROMHOS
18.7	MIG/ML	KMNO4 DEMAND MICROG/ML
< .002	MCI/L	ALPHA ACTIVITY
< .004	MCI/L	BETA ACTIVITY
205.00	MCI/L	TRITIUM (MICROCURIE/L)
99.6570	ATOM %	D

SPECTROGRAPHIC ANALYSIS

PLATE SHEET(S): C0556, HHH01
SPECTROCHEMICAL METHOD (SEE LEGEND BELOW)
REPORT UNIT: MICRO-G/ML REPORT BASIS: AS RECEIVED

*AG	.3	*AL	< 1.5	*AS	< 3	#AU	< .01	*B	< .2	*BA	< .01
BE		BI		BR		*CA	< 1	*CD	< .1	*CO	< .1
*CR	< .1	CS		*CU	< .05	*FE	< .3	GA		GE	
HF		HG		IN		IR		*K	7	*LI	< .03
*MG	< 1	*MN	.04	*MO	< .4	*NA	3.8	*NB	< .3	*NI	< .2
NP		OS		*P	< 1	*PB	< 1	PD		PT	
PU		RB		RE		RH		RU		S	
SB		SC		SE		*SI	< 1	SN		*SR	< .01
TA		TE		TH		*TI	< .05	TL		U	
*V	< .2	W		*Y	< .03	*ZN	< .1	*ZR	< .1		
CL		F		I		PA		AM		CM	
CE		#DY	< .08	ER		#EU	< .02	#GD	< .04	HO	
LA		LU		ND		PR		#SM	< .05	TB	
TM		YB									

IS DC-ARC ANSWER
* IS ICP ANSWER
A BLANK IS SSMS

RA025-02 Y-12 PLANT LABORATORY REPORT

RECEIVED	REPORT DATE	TYPE REPORT	BATCH-NUMBER	LOC	MTC	REQUISITION
02-12-86	03-11-86	FINAL	050-DX-0010	1	0050	760660

CHEMICAL ANALYSIS

.200055	G/G	D
< .010	PPM	HG
.994300	G/G	D20
11	PPM	TURBID SIO2 EQ

PHYSICAL PROPERTIES

< .004 MCI/L GAMMA ACTIVITY

PHYSICAL PROPERTIES

6.4		PH
6.10	MI/HOS	SPECIF COND (MICROMHOS
19.3	MIG/ML	KMNO4 DEMAND MICROG/ML
< .002	MCI/L	ALPHA ACTIVITY
< .004	MCI/L	BETA ACTIVITY
186.00	MCI/L	TRITIUM (MICROCURIE/L)
99.3670	ATOM %	D

SPECTROGRAPHIC ANALYSIS

PLATE SHEET(S): C0556, HHH01
SPECTROCHEMICAL METHOD (SEE LEGEND BELOW)
REPORT UNIT: MICRO-G/ML REPORT BASIS: AS RECEIVED

*AG	.2	*AL	< 1.5	*AS	< 3	#AU	< .01	*B	< .2	*BA	.01
BE		BI		BR		*CA	< 1	*CD	< .1	*CO	< .1
*CR	.12	CS		*CU	< .05	*FE	.9	GA		GE	
HF		HG		IN		IR		*K	< 5	*LI	< .03
*MG	< 1	*MN	.06	*MO	< .4	*NA	1.0	*NB	< .3	*NI	< .2
NP		OS		*P	< 1	*PB	< 1	PD		PT	
PU		RB		RE		RH		RU		S	
SB		SC		SE		*SI	< 1	SN		*SR	< .01
TA		TE		TH		*TI	< .05	TL		U	
*V	< .2	W		*Y	< .03	*ZN	< .1	*ZR	< .1		
CL		F		I		PA		AM		CM	
CE		#DY	< .08	ER		#EU	< .02	#GD	< .04	HO	
LA		LU		ND		PR		#SM	< .08	TB	
TM		YB									

IS DC-ARC ANSWER
* IS ICP ANSWER
A BLANK IS SSMS

3025-02 Y-12 PLANT LABORATORY REPORT

RECEIVED	REPORT DATE	TYPE REPORT	BATCH-NUMBER	LOC	MTC	REQUISITION
2-12-86	03-11-86	FINAL	050-EP-0700	1	0050	760662

CHEMICAL ANALYSIS

.198647 G/G D
< .010 PPM HG
.987298 G/G D2O
181 PPM TURBID SIO2 EQ

PHYSICAL PROPERTIES

< .004 MCI/L GAMMA ACTIVITY

PHYSICAL PROPERTIES

< 9.9		PH
> 99.99	MI/HOS	SPECIF COND (MICROMHOS
294.0	MIG/ML	KMNO4 DEMAND MICROG/ML
< .002	MCI/L	ALPHA ACTIVITY
< .004	MCI/L	BETA ACTIVITY
130.00	MCI/L	TRITIUM (MICROCURIE/L)
98.5900	ATOM %	D

SPECTROGRAPHIC ANALYSIS

PLATE SHEET(S): C0556, HHH01
SPECTROCHEMICAL METHOD (SEE LEGEND BELOW)
REPORT UNIT: MICRO-G/ML REPORT BASIS: AS RECEIVED

	.2	*AL	7.0	*AS	< 3	#AU	< .01	*B	.2	*BA	.01
BE		BI		BR		*CA	< 1	*CD	< .1	*CO	< .1
CR	< .1	CS		*CU	< .05	*FE	.3	GA		GE	
HF		HG		IN		IR		*K	22	*LI	< .03
MG	< 1	*MN	< .03	*MO	< .4	*NA	370	*NB	< .3	*NI	< .2
NB		OS		*P	.7	*PB	< 1	PD		PT	
RU		RB		RE		RH		RU		S	
SB		SC		SE		*SI	7	SN		*SR	< .01
TA		TE		TH		*TI	< .05	TL		U	
V	< .2	W		*Y	< .03	*ZN	< .1	*ZR	< .1		
CL		F		I		PA		AM		CM	
CE		#DY	< .08	ER		#EU	< .02	#GD	< .04	HO	
LA		LU		ND		PR		#SM	< .08	TB	
TM		YB									

IS DC-ARC ANSWER
IS ICP ANSWER
BLANK IS SSMS

:J25-02 Y-12 PLANT LABORATORY REPORT

:CEIVED	REPORT DATE	TYPE REPORT	BATCH-NUMBER	LOC	MTC	REQUISITION
:2-12-86	03-11-86	FINAL	050-EP-1800	1	0050	760664

'HEMICAL ANALYSIS

.201126 G/G D
< .010 PPM HG
.999619 G/G D20
5 PPM TURBID SIO2 EQ

PHYSICAL PROPERTIES

< .004 MCI/L GAMMA ACTIVITY

PHYSICAL PROPERTIES

< 9.9		PH
> 99.99	MI/HOS	SPECIF COND (MICROMHOS
< 4.0	MIG/ML	KMNO4 DEMAND MICROG/ML
< .002	MCI/L	ALPHA ACTIVITY
< .004	MCI/L	BETA ACTIVITY
250.00	MCI/L	TRITIUM (MICROCURIE/L)
99.9580	ATOM %	D

SPECTROGRAPHIC ANALYSIS

LATE SHEET(S): C0556, HHH01
PECTROCHEMICAL METHOD (SEE LEGEND BELOW)
.PORT UNIT: MICRO-G/ML REPORT BASIS: AS RECEIVED

	< .2	*AL	< 1.5	*AS	< 3	#AU	< .01	*B	< .2	*BA	.02
:E		BI		SR		*CA	< 1	*CD	< .1	*CO	< .1
:R	< .1	CS		*CU	< .05	*FE	< .3	GA		GE	
1E		HG		IN		IR		*K	43	*LI	< .03
AG	< 1	*MN	< .03	*MO	< .4	*NA	560	*NB	< .3	*NI	< .2
NP		OS		*P	< 1	*PB	< 1	PD		PT	
-U		RB		RE		RH		RU		S	
3B		SC		SE		*SI	< 1	SN		*SR	< .01
TA		TE		TH		*TI	< .05	TL		U	
V	< .2	W		*Y	< .03	*ZN	< .1	*ZR	< .1		
:L		F		I		PA		AM		CM	
:E		#DY	< .08	ER		#EU	< .02	#GD	< .04	HO	
LA		LU		ND		PR		#SM	< .08	TB	
TM		YB									

IS DC-ARC ANSWER
IS ICP ANSWER
BLANK IS SSMS

RA025-02

Y-12 PLANT LABORATORY REPORT

RECEIVED	REPORT DATE	TYPE REPORT	BATCH-NUMBER	LOC	MTC	REQUISITION
02-12-86	03-11-86	FINAL	050-EP-1700	1	0050	760666

CHEMICAL ANALYSIS

.200899 G/G D
< .010 PPM HG
.998491 G/G D2O
20 PPM TURBID SIO2 EQ

PHYSICAL PROPERTIES

< .004 MCI/L GAMMA ACTIVITY

PHYSICAL PROPERTIES

< 9.9		PH
> 99.99	MI/HOS	SPECIF COND (MICROMHOS
9.1	MIG/ML	KMNO4 DEMAND MICROG/ML
< .002	MCI/L	ALPHA ACTIVITY
< .004	MCI/L	BETA ACTIVITY
234.00	MCI/L	TRITIUM (MICROCURIE/L)
99.8320	ATOM %	D

SPECTROGRAPHIC ANALYSIS

PLATE SHEET(S): C0556, HHH01
SPECTROCHEMICAL METHOD (SEE LEGEND BELOW)
REPORT UNIT: MICRO-G/ML REPORT BASIS: AS RECEIVED

*AG	< .2	*AL	< 1.5	*AS	< 3	#AU	< .01	*B	< .2	*BA	.02
BE		BI		BR		*CA	< 1	*CD	< .1	*CO	< .1
*CR	.17	CS		*CU	< .05	*FE	< .3	GA		GE	
HF		HG		IN		IR		*K	24	*LI	< .03
*MG	< 1	*MN	< .03	*MO	< .4	*NA	190	*NB	< .3	*NI	< .2
NP		OS		*P	< 1	*PB	< 1	PD		PT	
PU		RB		RE		RH		RU		S	
SB		SC		SE		*SI	< 1	SN		*SR	< .01
TA		TE		TH		*TI	< .05	TL		U	
*V	< .2	W		*Y	< .03	*ZN	< .1	*ZR	< .1		
CL		F		I		PA		AM		CM	
CE		#DY	< .08	ER		#EU	< .02	#GD	< .04	HO	
LA		LU		ND		PR		#SM	< .08	TB	
TM		YB									

IS DC-ARC ANSWER
* IS ICP ANSWER
A BLANK IS SSMS

.025-02

Y-12 PLANT LABORATORY REPORT

RECEIVED	REPORT DATE	TYPE REPORT	BATCH-NUMBER	LOC	MTC	REQUISITION
3-12-86	03-11-86	FINAL	050-EP-1800	1	0050	760668

CHEMICAL ANALYSIS

.200274 G/G D
< .010 PPM HG
.995389 G/G D20
9 PPM TURBID SIO2 EQ

PHYSICAL PROPERTIES

< .004 MCI/L GAMMA ACTIVITY

PHYSICAL PROPERTIES

< 9.9		PH
> 99.99	MI/HOS	SPECIF COND (MICROMHOS
32.6	MIG/ML	KMNO4 DEMAND MICROG/ML
.004	MCI/L	ALPHA ACTIVITY
< .004	MCI/L	BETA ACTIVITY
252.00	MCI/L	TRITIUM (MICROCURIE/L)
99.4880	ATOM %	D

SPECTROGRAPHIC ANALYSIS

PLATE SHEET(S): C0556, HHH01
SPECTROCHEMICAL METHOD (SEE LEGEND BELOW)
REPORT UNIT: MICRO-G/ML REPORT BASIS: AS RECEIVED

	.2	*AL	< 1.5	*AS	< 3	#AU	< .01	*B	< .2	*BA	.03
		BI		BR		*CA	< 1	*CD	< .1	*CO	< .1
CR	.14	CS		*CU	< .05	*FE	< .3	GA		GE	
HF		HG		IN		IR		*K	46	*LI	< .03
MG	< 1	*MN	< .03	*MO	< .4	*NA	720	*NB	< .3	*NI	< .2
NP		OS		*P	< 1	*PB	< 1	PD		PT	
PU		RB		RE		RH		RU		S	
SB		SC		SE		*SI	< 1	SN		*SR	< .01
TA		TE		TH		*TI	< .05	TL		U	
V	< .2	W		*Y	< .03	*ZN	< .1	*ZR	< .1		
CL		F		I		PA		AM		CM	
CE		#DY	< .08	ER		#EU	< .02	#GD	< .04	HO	
LA		LU		ND		PR		#SM	< .05	TB	
TM		YB									

IS DC-ARC ANSWER
IS ICP ANSWER
BLANK IS SSMS

RA025-02

Y-12 PLANT LABORATORY REPORT

RECEIVED	REPORT DATE	TYPE REPORT	BATCH-NUMBER	LOC	MTC	REQUISITION
02-12-86	03-11-86	FINAL	050-EP-2600	1	0050	760670

CHEMICAL ANALYSIS

.200010 G/G D
< .010 PPM HG
.994074 G/G D2O
17 PPM TURBID SIO2 EQ

PHYSICAL PROPERTIES

< .004 MCI/L GAMMA ACTIVITY

PHYSICAL PROPERTIES

< 9.9		PH
> 99.99	MI/HOS	SPECIF COND (MICROMHOS
30.5	MIG/ML	KMNO4 DEMAND MICROG/ML
< .002	MCI/L	ALPHA ACTIVITY
< .004	MCI/L	BETA ACTIVITY
138.00	MCI/L	TRITIUM (MICROCURIE/L)
99.3420	ATOM %	D

SPECTROGRAPHIC ANALYSIS

PLATE SHEET(S): C0556, HHH01
SPECTROCHEMICAL METHOD (SEE LEGEND BELOW)
REPORT UNIT: MICRO-G/ML REPORT BASIS: AS RECEIVED

*AG	.2	*AL	< 1.5	*AS	< 3	#AU	< .01	*B	< .2	*BA	.03
BE		BI		BR		*CA	< 1	*CD	< .1	*CO	< .1
*CR	< .1	CS		*CU	< .05	*FE	< .3	GA		GE	
HF		HG		IN		IR		*K	33	*LI	< .07
*MG	< 1	*MN	< .03	*MO	< .4	*NA	520	*NB	< .3	*NI	< .2
NP		OS		*P	< 1	*PB	< 1	PD		PT	
PU		RB		RE		RH		RU		S	
SB		SC		SE		*SI	< 1	SN		*SR	< .01
TA		TE		TH		*TI	< .05	TL		U	
*V	< .2	W		*Y	< .03	*ZN	.31	*ZR	< .1		
CL		F		I		PA		AM		CM	
CE		#DY	< .08	ER		#EU	< .02	#GD	< .04	HO	
LA		LU		ND		PR		#SM	< .08	TB	
TM		YB									

IS DC-ARC ANSWER
* IS ICP ANSWER
A BLANK IS SSMS

RA025-02 Y-12 PLANT LABORATORY REPORT

RECEIVED	REPORT DATE	TYPE REPORT	BATCH-NUMBER	LOC	MIC	REQUISITIO
02-12-86	03-11-86	FINAL	050-EP-0805	1	0050	760672

CHEMICAL ANALYSIS

.200603 G/G D
< .010 PPM HG
.997022 G/G D20
75 PPM TURBID SIO2 EQ

PHYSICAL PROPERTIES

< .004 MCI/L GAMMA ACTIVITY

PHYSICAL PROPERTIES

8.9		PH
62.00	MI/HOS	SPECIF COND (MICROMHOS
28.3	MIG/ML	KMNO4 DEMAND MICROG/ML
< .002	MCI/L	ALPHA ACTIVITY
< .004	MCI/L	BETA ACTIVITY
196.00	MCI/L	TRITIUM (MICROCURIE/L)
99.6690	ATOM %	D

SPECTROGRAPHIC ANALYSIS

PLATE SHEET(S): C0556, HHH01
SPECTROCHEMICAL METHOD (SEE LEGEND BELOW)
REPORT UNIT: MICRO-G/ML REPORT BASIS: AS RECEIVED

*AG	.3	*AL	< 1.5	*AS	< 3	#AU	< .01	*B	< .2	*BA	.03
BE		BI		BR		*CA	< 1	*CD	< .1	*CO	< .1
*CR	< .1	CS		*CU	< .05	*FE	< .3	GA		GE	
HF		HG		IN		IR		*K	< 5	*LI	< .03
*MG	< 1	*MN	< .03	*MO	< .4	*NA	1.1	*NB	< .3	*NI	< .[illegible]
NP		OS		*P	< 1	*PB	< 1	PD		PT	
PU		RB		RE		RH		RU		S	
SB		SC		SE		*SI	< 1	SN		*SR	< .01
TA		TE		TH		*TI	< .05	TL		U	
*V	< .2	W		*Y	< .03	*ZN	< .1	*ZR	< .1		
CL		F		I		PA		AM		CM	
CE		#DY	< .08	ER		#EU	< .02	#GD	< .04	HO	
LA		LU		ND		PR		#SM	< .03	TB	
TM		YB									

IS DC-ARC ANSWER
* IS ICP ANSWER
A BLANK IS SSMS

RAU25-02 Y-12 PLANT LABORATORY REPORT

RECEIVED	REPORT DATE	TYPE REPORT	BATCH-NUMBER	LOC	MTC	REQUISITION
02-12-86	03-11-86	FINAL	050-EP-1800	1	0050	760674

CHEMICAL ANALYSIS

.201098 G/G D
< .010 PPM HG
.999480 G/G D2O
4 PPM TURBID SIO2 EQ

PHYSICAL PROPERTIES

< .004 MCI/L GAMMA ACTIVITY

PHYSICAL PROPERTIES

< 9.9		PH
> 99.99	MI/HOS	SPECIF COND (MICROMHOS
< 4.0	MIG/ML	KMNO4 DEMAND MICROG/ML
< .002	MCI/L	ALPHA ACTIVITY
< .004	MCI/L	BETA ACTIVITY
204.00	MCI/L	TRITIUM (MICROCURIE/L)
99.9420	ATOM %	D

SPECTROGRAPHIC ANALYSIS

PLATE SHEET(S): C0556, HHH01
SPECTROCHEMICAL METHOD (SEE LEGEND BELOW)
REPORT UNIT: MICRO-G/ML REPORT BASIS: AS RECEIVED

*AG	.3	*AL	< 1.5	*AS	< 3	#AU	< .01	*B	< .2	*BA	.03
BE		BI		BR		*CA	< 1	*CD	< .1	*CO	< .1
*CR	.12	CS		*CU	< .05	*FE	< .3	GA		GE	
HF		HG		IN		IR		*K	57	*LI	< .03
*MG	< 1	*MN	< .03	*MO	< .4	*NA	960	*NB	< .3	*NI	< .3
NP		OS		*P	< 1	*PB	< 1	PD		PT	
PU		RB		RE		RH		RU		S	
SB		SC		SE		*SI	< 1	SN		*SR	< .01
TA		TE		TH		*TI	< .05	TL		U	
*V	< .2	W		*Y	< .03	*ZN	< .1	*ZR	< .1		
CL		F		I		PA		AM		CM	
CE		#DY	< .08	ER		#EU	< .02	#GD	< .04	HO	
LA		LU		ND		OR		#SM	< .08	TB	
TM		YB									

IS DC-ARC ANSWER
* IS ICP ANSWER
A BLANK IS SSMS

RA025-02 Y-12 PLANT LABORATORY REPORT

RECEIVED	REPORT DATE	TYPE REPORT	BATCH-NUMBER	LOC	MTC	REQUISITION
02-12-86	03-11-86	FINAL	050-EP-1700	1	0050	760676

CHEMICAL ANALYSIS

.201028 G/G D
< .010 PPM HG
.999133 G/G D2O
25 PPM TURBID SIO2 EQ

PHYSICAL PROPERTIES

< .004 MCI/L GAMMA ACTIVITY

PHYSICAL PROPERTIES

< 9.9		PH
> 99.99	MI/HOS	SPECIF COND (MICROMHOS
25.3	MIG/ML	KMNO4 DEMAND MICROG/ML
< .002	MCI/L	ALPHA ACTIVITY
< .004	MCI/L	BETA ACTIVITY
249.00	MCI/L	TRITIUM (MICROCURIE/L)
99.9040	ATOM %	D

SPECTROGRAPHIC ANALYSIS

PLATE SHEET(S): C0556, HHH01
SPECTROCHEMICAL METHOD (SEE LEGEND BELOW)
REPORT UNIT: MICRO-G/ML REPORT BASIS: AS RECEIVED

*AG	.3	*AL	< 1.5	*AS	< 3	#AU	< .01	*B	< .2	*BA	.02
BE		BI		BR		*CA	< 1	*CD	< .1	*CO	< .1
*CR	.16	CS		*CU	< .05	*FE	< .3	GA		GE	
HF		HG		IN		IR		*K	15	*LI	< .03
*MG	< 1	*MN	< .03	*MO	< .4	*NA	200	*NB	< .3	*NI	< .2
NP		OS		*P	< 1	*PB	< 1	PD		PT	
PU		RB		RE		RH		RU		S	
SB		SC		SE		*SI	< 1	SN		*SR	< .01
TA		TE		TH		*TI	< .05	TL		U	
*V	< .2	W		*Y	< .03	*ZN	< .1	*ZR	< .1		
CL		F		I		PA		AM		CM	
CE		#DY	< .08	ER		#EU	< .02	#GD	< .04	HO	
LA		LU		ND		PR		#SM	< .08	TB	
TM		YB									

IS DC-ARC ANSWER
* IS ICP ANSWER
A BLANK IS SSMS

RA025-02 Y-12 PLANT LABORATORY REPORT

RECEIVED	REPORT DATE	TYPE REPORT	BATCH-NUMBER	LOC	MTC	REQUISITIO
02-12-86	03-11-86	FINAL	050-EP-1700	1	0050	760678

CHEMICAL ANALYSIS

.200926 G/G D
< .010 PPM HG
.998627 G/G D2O
200 PPM TURBID SIO2 EQ

PHYSICAL PROPERTIES

< .004 MCI/L GAMMA ACTIVITY

PHYSICAL PROPERTIES

< 9.9		PH
> 99.99	MI/HOS	SPECIF COND (MICROMHOS
50.6	MIG/ML	KMNO4 DEMAND MICROG/ML
< .002	MCI/L	ALPHA ACTIVITY
< .004	MCI/L	BETA ACTIVITY
156.00	MCI/L	TRITIUM (MICROCURIE/L)
99.5470	ATOM %	D

SPECTROGRAPHIC ANALYSIS

PLATE SHEET(S): C0556, HHH01
SPECTROCHEMICAL METHOD (SEE LEGEND BELOW)
REPORT UNIT: MICRO-G/ML REPORT BASIS: AS RECEIVED

*AG	.3	*AL	2.9	*AS	< 5	*AU	< .01	*B	< .2	*BA	< .01
BE		BI		BR		*CA	< 1	*CD	< .1	*CO	< .1
*CR	.41	CS		*CU	< .05	*FE	< .3	GA		GE	
HF		HG		IN		IR		*K	58	*LI	< .03
*MG	< 1	*MN	< .03	*MO	< .4	*NA	290	*NB	< .3	*NI	< .2
NP		OS		*P	< 1	*PB	< 1	PD		PT	
PU		RB		RE		RH		RU		S	
SB		SC		SE		*SI	4	SN		*SR	< .01
TA		TE		TH		*TI	< .05	TL		U	
*V	< .2	W		*Y	< .03	*ZN	.85	*ZR	< .1		
CL		F		I		PA		AM		CM	
CE		#DY	< .08	ER		#EU	< .02	#GD	< .04	HO	
LA		LU		ND		PR		#SM	< .08	TB	
TM		YB									

IS DC-ARC ANSWER
* IS ICP ANSWER
A BLANK IS SSMS

RA025-02 Y-12 PLANT LABORATORY REPORT

RECEIVED	REPORT DATE	TYPE REPORT	BATCH-NUMBER LOC	MTC	REQUISITION
02-18-86	03-11-86	FINAL	050-HI-5934	0050	760688

CHEMICAL ANALYSIS

.189104	G/G	D
< .010	PPM	HG
.939869	G/G	D20
3	PPM	TURBID SIO2 EQ

PHYSICAL PROPERTIES

< .004	MCI/L	GAMMA ACTIVITY

PHYSICAL PROPERTIES

2.0		PH
> 99.99	MI/HOS	SPECIF COND (MICROMHOS
< 4.0	MIG/ML	KMNO4 DEMAND MICROG/ML
< .002	MCI/L	ALPHA ACTIVITY
< .004	MCI/L	BETA ACTIVITY
56.30	MCI/L	TRITIUM (MICROCURIE/L)
93.3600	ATOM %	D

SPECTROGRAPHIC ANALYSIS

PLATE SHEET(S): C0564
SPECTROCHEMICAL METHOD (SEE LEGEND BELOW)
REPORT UNIT: MICRO-G/G (PPM) REPORT BASIS: AS RECEIVED

#AG	< .01	AL		AS		#AU	< .01	#B	< .01	BA	
BE		BI		BR		CA		#CD	< .01	CO	
CR		CS		#CU	< .04	FE		GA		GE	
HF		HG		IN		IR		K		#LI	< .1
MG		MN		MO		NA		NB		NI	
NP		OS		P		PB		PD		PT	
PU		RB		RE		RH		RU		S	
SB		SC		SE		SI		SN		SR	
TA		TE		TH		TI		TL		U	
V		W		Y		ZN		ZR			
CL		F		I		PA		AM		CM	
CE		#DY	< .03	ER		#EU	< .02	#GD	< .04	HO	
LA		LU		ND		PR		#SM	< .03	TB	
TM		YB									

IS DC-ARC ANSWER
* IS ICP ANSWER
A BLANK IS SSMS

FY 86

RAD25-02 Y-12 PLANT LABORATORY REPORT

RECEIVED	REPORT DATE	TYPE REPORT	BATCH-NUMBER LOC	MTC	REQUISI
12-09-86	12-09-86	FINAL	0040-00-7430	0040	761177

CHEMICAL ANALYSIS PHYSICAL PROPERTIES

86 NCI/G TRITIUM (NANOCURIE

RAD25-02 Y-12 PLANT LABORATORY REPORT

RECEIVED	REPORT DATE	TYPE REPORT	BATCH-NUMBER LOC	MTC	REQUISITI
12-09-86	12-09-86	FINAL	0040-00-7435	0040	761182

CHEMICAL ANALYSIS PHYSICAL PROPERTIES

91 NCI/G TRITIUM (NANOCURIE/

Y-1 PLANT LABORATORY REPORT

RECEIVED	REPORT DAT	TYP REPORT	BATCH-NUMBER LOC	MTC	REQUISIT
12-[illegible]	1[illegible]-0[illegible]-[illegible]	FINAL	0040-00-7438	0040	761185

CHEMICAL ANALYSIS

PHYSICAL PROPERTIES

85 NCI/G TRITIUM (NANOCURI

RA025-02

Y-12 PLANT LABORATORY REPORT

RECEIVED	REPORT DATE	TYPE REPORT	BATCH-NUMBER LOC	MTC	REQUISITI
02-18-87	02-18-87	FINAL	0040-00-7456	0040	761228

CHEMICAL ANALYSIS

PHYSICAL PROPERTIES

110 NCI/G TRITIUM (NANOCURIE/

Sheet

RA025-03 Y-12 PLANT LABORATORY REPORT

RECEIVED	REPORT DATE	TYPE REPORT	BATCH-NUMBER LOC	MTC	REQUISI.
03-11-87	03-13-87	FINAL	[illegible]-7473	0040	751245

CHEMICAL ANALYSIS PHYSICAL PROPERTIES

130 NCI/G TRITIUM (NANOCURI

RA025-03 Y-12 PLANT LABORATORY REPORT

RECEIVED	REPORT DATE	TYPE REPORT	BATCH-NUMBER LOC	MTC	REQUISIT
03-11-87	03-13-87	FINAL	0060-00-7482	0040	761279

CHEMICAL ANALYSIS PHYSICAL PROPERTIES

130 NCI/G TRITIUM (NANOCURIE/

RA025-02

Y-12 PLANT LABORATORY REPORT

RECEIVED	REPORT DATE	TYPE REPORT	BATCH-NUMBER-LOC	MTC	REQUISIT
02-13-87	02-18-87	FINAL	0040-00-7466	0040	761238

CHEMICAL ANALYSIS

PHYSICAL PROPERTIES

110 NCI/G TRITIUM (NANOCURIE

Pulled 2-1-87 D bank
cyl 3 & 4

RA025-02

Y-12 PLANT LABORATORY REPORT

RECEIVED	REPORT DATE	TYPE REPORT	BATCH-NUMBER-LOC	MTC	REQUISITI
03-11-87	03-13-87	FINAL	00-7490	0040	761287

CHEMICAL ANALYSIS

PHYSICAL PROPERTIES

INSF MAT NCI/G TRITIUM (NANOCURIE

RAD25-02 Y-12 PLANT LABORATORY REPORT

RECEIVED	REPORT DATE	TYPE REPORT	BATCH-NUMBER LOC	MTC	REQUISIT
03-11-87	03-13-87	FINAL	0040-00-7500	0040	761297

CHEMICAL ANALYSIS

PHYSICAL PROPERTIES

INSF MAT NCI/G TRITIUM (NANOCURI

RAD25-02 Y-12 PLANT LABORATORY REPORT

RECEIVED	REPORT DATE	TYPE REPORT	BATCH-NUMBER LOC	MTC	REQUISIT
03-11-87	03-13-87	FINAL	0040-00-7500	0040	761305

CHEMICAL ANALYSIS

PHYSICAL PROPERTIES

INSF MAT NCI/G TRITIUM (NANOCURIE/

RA025-02 Y-12 PLANT LABORATORY REPORT

RECEIVED	REPORT DATE	TYPE REPORT	BATCH-NUMBER LOC	MTC	REQUISITI
04-27-87	04-27-87	FINAL	0040-00-7540	0040	761387

CHEMICAL ANALYSIS

PHYSICAL PROPERTIES

130 NCI/G TRITIUM (NANOCURIE/.

RA025-02 Y-12 PLANT LABORATORY REPORT

RECEIVED	REPORT DATE	TYPE REPORT	BATCH-NUMBER LOC	MTC	REQUISITIO
04-08-87	04-29-87	FINAL	040 -00-7516	0040	761313

CHEMICAL ANALYSIS

PHYSICAL PROPERTIES

110 NCI/G TRITIUM (NANOCURIE/G

RA025-02 Y-12 PLANT LABORATORY REPORT

RECEIVED	REPORT DATE	TYPE REPORT	BATCH-NUMBER LOC	MTC	REQUISITI
04-27-87	04-27-87	FINAL	0040-00-7531	0040	761378

CHEMICAL ANALYSIS

PHYSICAL PROPERTIES

110 NCI/G TRITIUM (NANOCURIE/

RA025-02 Y-12 PLANT LABORATORY REPORT

RECEIVED	REPORT DATE	TYPE REPORT	BATCH-NUMBER LOC	MTC	REQUISITIC
04-27-87	04-27-87	FINAL	0040-00-7547	0040	761394

CHEMICAL ANALYSIS

PHYSICAL PROPERTIES

120 NCI/G TRITIUM (NANOCURIE/G

RA025-02 Y-12 PLANT LABORATORY REPORT

RECEIVED	REPORT DATE	TYPE REPORT	BATCH-NUMBER LOC	MTC	REQUISITI
05-10-87	05-11-87	FINAL	0040-00-7560	0040	761407

CHEMICAL ANALYSIS PHYSICAL PROPERTIES

130 NCI/G TRITIUM (NANOCURIE/

RA025-02 Y-12 PLANT LABORATORY REPORT

RECEIVED	REPORT DATE	TYPE REPORT	BATCH-NUMBER LOC	MTC	REQUISITI
05-10-87	05-11-87	FINAL	0040-00-7669	0040	761416

CHEMICAL ANALYSIS PHYSICAL PROPERTIES

140 NCI/G TRITIUM (NANOCURIE/

RAD25-02 Y-12 PLANT LABORATORY REPORT

RECEIVED	REPORT DATE	TYPE REPORT	BATCH-NUMBER LOC	MTC	REQUISITI
05-16-87	05-16-87	FINAL	0040-00-7684	0040	761431

CHEMICAL ANALYSIS PHYSICAL PROPERTIES

110 NCI/G TRITIUM (NANOCURIE/

RAD25-02 Y-12 PLANT LABORATORY REPORT

RECEIVED	REPORT DATE	TYPE REPORT	BATCH-NUMBER LOC	MTC	REQUISITI
05-16-87	05-16-87	FINAL	6040-00-7691	0040	761438

CHEMICAL ANALYSIS PHYSICAL PROPERTIES

110 NCI/G TRITIUM (NANOCURIE/G

RA025-02 Y-12 PLANT LABORATORY REPORT

RECEIVED	REPORT DATE	TYPE REPORT	BATCH-NUMBER LOC	MTC	REQUISITI
07-14-87	07-14-87	FINAL	0040-00-7727	0040	761474

CHEMICAL ANALYSIS

PHYSICAL PROPERTIES

110 NCI/G TRITIUM (NANOCURIE/

RA025-02 Y-12 PLANT LABORATORY REPORT

RECEIVED	REPORT DATE	TYPE REPORT	BATCH-NUMBER LOC	MTC	REQUISITI
07-14-87	07-14-87	FINAL	0040-00-7720	0040	761467

CHEMICAL ANALYSIS

PHYSICAL PROPERTIES

INSF MAT NCI/G TRITIUM (NANOCURIE/

RA025-02 Y-12 PLANT LABORATORY REPORT

RECEIVED	REPORT DATE	TYPE REPORT	BATCH-NUMBER LOC	MTC	REQUISITI.
06-10-87	06-11-87	FINAL	0040-00-7675	0040	761423

CHEMICAL ANALYSIS PHYSICAL PROPERTIES

130 NCI/G TRITIUM (NANOCURIE/

RA025-02 Y-12 PLANT LABORATORY REPORT

RECEIVED	REPORT DATE	TYPE REPORT	BATCH-NUMBER LOC	MTC	REQUISITI
07-14-87	07-14-87	FINAL	0040-00-7732	0040	761479

CHEMICAL ANALYSIS PHYSICAL PROPERTIES

180 NCI/G TRITIUM (NANOCURIE/

RA025-02 Y-12 PLANT LABORATORY REPORT

RECEIVED	REPORT DATE	TYPE REPORT	BATCH-NUMBER	LOC	MTC	REQUISITI
07-14-87	07-14-87	FINAL	0043-00-7733		0040	761480

CHEMICAL ANALYSIS

PHYSICAL PROPERTIES

170 NCI/G TRITIUM (NANOCURIE/

FY 87

DOCUMENT DESCRIPTION (Completed by Requesting Division)

Document No.	Date of Request	Requested Date of Release (Allow 5 to 10 Days)	Page Count
MS/ChR2-0302	10/29/97		

Unclassified Title: DEUTERIUM NOLS AND IDS AT THE Y-12 PLANT (EXERTP FROM Y/DG-25649)

Author's / Requestor's Name	Telephone No., Pager No. and Plant Address	Account Number
E. OWINGS / S. W. Wiley	6-0263, 417-5417, 9106, MS-8023	2012-4543

INTENDED AUDIENCE: ☐ Public ☐ Environmental Regulators ☐ NWC ☐ DOE Contractors ☒ Other ChemRisk

TYPE: ☐ Abstract ☐ Brochure ☐ Co-op Report ☐ Formal Report ☐ Informal Report
☐ Invention Disclosure ☐ Journal Article ☐ News Release ☐ Photograph/Visuals ☐ Technical Progress Report
☐ Thesis/Term Paper ☐ Videotape ☐ Other
☐ Oral Presentation (identify meeting, sponsor, location, date):

PATENT OR INVENTION SIGNIFICANCE ☐ Yes ☐ No (Identify) Document will be published in proceedings ☐ Yes ☐ No
Document has been previously released ☐ Yes ☐ No (Reference) Document will be distributed at meeting ☐ Yes ☐ No

This document contains unclassified controlled information. ☐ YES ☐ NO [If yes, please identify the category(s) by checking the applicable space(s) below.]

☐ Unclassified Controlled Nuclear Information (UCNI)
☐ Sensitive Nuclear Technology Information
☐ Export Controlled Information
☐ Safeguards Information
☐ Privacy Act Information
☐ Government Confidential Commercial Information
☐ Other (Identify)
☐ Protected CRADA Information
☐ Copyrighted Information
☐ Intellectual Property Information
☐ Proprietary Information
☐ Applied Technology Information
☐ Naval Nuclear Propulsion Information
☐ Lockheed Martin Confidential
☐ Lockheed Martin Proprietary
☐ Lockheed Martin Use Only
☐ Energy Systems Sensitive
☐ Internal Use Only
☐ Official Use Only

DIVISION REVIEW AND APPROVAL (Completed by Requesting Division)

CLASSIFICATION REVIEW [Authorized Derivative Classifier (ADC)]

Classification of: Title: U Abstract: –

DOCUMENT: Level U Category –

R BAYLOR JR (Print Name) R Baylor Jr (Signature) 10/29/97 (Date)

DOCUMENT REQUEST APPROVED (Division/Department Mgr.)

S. W. Wiley HS Coordinator
Please Print Name and Title

S. W. Wiley (Signature) 10/29/97 (Date)

APPROVAL AND RELEASE (Completed by the Classification/Technical Information Control Office)

CLASSIFICATION OFFICE:

Title: U Abstract: –

DOCUMENT: Level U Category –

Weapons Data – Sigma –

L. B. Porter (Y-12 Classification Office) 10/29/97 (Date)

☐ waived P. R. McKenney (Patent Office) 10/29/97 (Date)
☐ Date
☐ Date
☐ Date

DISTRIBUTION: ☒ UNLIMITED Chem Risk
☐ LIMITED
☐ SPECIAL LIMITED
☐ DOE-OSTI: Distribution Category
☐ OTHER

Distribution of UNC-7721B Form:
Y-12 Central Files 77
TIO
Requestor Date Initiated 10-29-97

Distribution Remarks:

☐ Release subject to use of the following admonitory markings and conditions

☐ Disclaimer ☐ Copyright ☐ Patent Caution ☐ Other

☐ Copy of Document to Y-12 Central Files (MS-8169, Bldg. 9711-5)

Request Approved

P. R. McKenney (Y-12 Technical Information Office) 10/29/97 (Date)

Conditions/Remarks:

1731

MS/ChR2-0302

1731

Deuterium NOLs and IDs at the Y-12 Plant

Excerpted from Y/DG-25649, *Historical Review of Accountable Materials at the Y-12 Plant (U)*, compiled by E. Owings, July 28, 1995, from Table XLIX, pages 92 and 93.

Information presented is normal operating losses (NOLs) and inventory differences (IDs) for deuterium at the Y-12 Plant between FY 1955 and FY 1994, inclusive. Quantities are in kilograms.

Period	NOLs ^2D	I.D. ^2D
FY 1955	15	2,070
FY 1956	63	1,642
FY 1957	36	1,480
FY 1958	27	871
FY 1959	134	459
FY 1960	83	592
FY 1961	34	906
FY 1962	70	987
FY 1963	83	1,093
FY 1964	144	800
FY 1965	137	491
FY 1966	31	497
FY 1967	62	344
FY 1968	39	290
FY 1969	41	172
FY 1970	18	265
FY 1971	297	210
FY 1972	253	178
FY 1973	151	141
FY 1974	210	204
FY 1975	136	99
FY 1976	109	132
FY 1976A (3 mo.)	59	23
FY 1977	150	210
FY 1978	142	156
FY 1979	85	99
FY 1980	105	120
FY 1981	107	142
FY 1982	156	251
FY 1983	241	175
FY 1984	290	254
FY 1985	231	105
FY 1986	379	123
FY 1987	147	47
FY 1988	230	64
FY 1989	129	19
FY 1990	106	11
FY 1991	61	31
FY 1992	64	39
FY 1993	23	38
FY 1994	22	15

1731

APPROVED FOR PUBLIC RELEASE

P. L. McKenney 10/29/97

Technical Information Office / / Date

DEPARTMENT OF ENERGY DECLASSIFICATION REVIEW

1st Reviewer: R Bowles Jr (Name)
Authority: ☑ ADC ☑ ADD
Date: 10/28/97

2nd Reviewer: L Porter (Name)
Authority: ☑ ADD
Date: 10/29/97

Determination 2 (Insert Number(s))
1. Classification Retained
2. Classification Changed To: U
3. Contains NO DOE Classified Information
4. Classification Cancelled
5. Classified Information Bracketed
6. Other (Specify) EXCERPTED INFORMATION IS UNCLASSIFIED PER Y/CG 990 TOPIC 20350