No. 1107

Other titles in this series

TL/CE/1 BORON
A G Massey and J Kane

M & B Monographs

CE/1 MICROBIOLOGICAL CORROSION
G H Booth

CE/2 SOLVENT TREATMENT OF COAL
W S Wise

CE/3 THE FLUIDISED COMBUSTION OF COAL
D G Skinner

CE/4 CARBONISATION OF COAL
J Gibson and D H Gregory

CE/5 THE PRINCIPLES OF GAS EXTRACTION
P F M Paul and W S Wise

CE/6 METAL-AIR BATTERIES
D P Gregory

CE/7 FUEL CELLS
D P Gregory

CE/8 BIOTECHNOLOGY OF INDUSTRIAL WATER CONSERVATION
B E Purkiss

CE/9 THE MICROBIOLOGICAL EXTRACTION OF METALS
E A Keenan

M & B Technical Library TL/CE/2

General Editor: J Gordon Cook, PhD, FRIC

Uranium Enrichment by Gas Centrifuge

D G Avery, PhD

E Davies, BSc

British Nuclear Fuels Ltd

PROPERTY OF
ORGDP LIBRARY
UNION CARBIDE CORP. NUCLEAR DIV.

Distributed in the United States by
CRANE, RUSSAK & COMPANY, INC.
347 Madison Avenue
New York, New York 10017

First published in Great Britain 1973
by Mills & Boon Limited, 17–19 Foley Street,
London, W1A 1DR.

© D G Avery and E Davies 1973

ISBN 0.263.05121.8

All rights reserved. No part of this publication
may be reproduced, stored in a retrieval system,
or transmitted in any form or by any means,
electronic, mechanical, photocopying, recording or
otherwise, without the prior permission of
Mills & Boon Limited.

Text set in 11/12 pt. Monotype Baskerville, printed by
letterpress, and bound in Great Britain at
The Pitman Press, Bath

CONTENTS

1. Introduction 7

2. PRINCIPLES OF ISOTOPE SEPARATION 10
   2.1 Methods of isotope separation 10
   2.2 Basic isotope separation theory 16

3. GAS CENTRIFUGE 21
   3.1 Introduction 21
   3.2 Theory of the centrifuge 23
   3.3 Types of centrifuge 28

4. ENGINEERING DESIGN OF CENTRIFUGES 43

5. CENTRIFUGE PLANT 56
   5.1 Centrifuge cascades 56
   5.2 Ideal cascades 57
   5.3 Practical cascades 62

6. ECONOMICS AND FUTURE DEVELOPMENTS 64

Appendix I : The maximum separative power of a centrifuge

Appendix II : The general partial differential equation for a centrifuge

Appendix III : The partial differential equation of the countercurrent centrifuge

Appendix IV : Flow profiles

References

General Bibliography

Author Index

Subject Index

1. Introduction

Present generations of nuclear reactors require for their economic operation uranium in which the concentration of the lighter ^{235}U isotope has been enriched to levels of around 2–4 per cent. Unless current predictions of the expansion of nuclear power prove to be almost totally invalid, the next ten to twenty years will see a substantial and growing demand for this enriched uranium. It is this demand which now provides the stimulus for substantial world-wide development of methods for separating uranium isotopes. A conservative estimate suggests that a total investment in uranium enrichment plants of some £1,000M–£2,000M will be required by about the middle of the 1980s. Again, assuming that nuclear power holds its expected place in the provision of world energy needs, at least comparable further increases can be expected before the advent of the self-sustaining plutonium-fuelled fast reactor cuts down the rate at which current concepts of nuclear power stations are installed.

This is not the first incentive to appear for the industrial application of the many techniques which can be shown to exist in principle for isotope separation. During the Second World War, a major part of the Manhattan project concerned with developing the atomic bomb in the United States was directed towards the development of methods of isotope separation. Along with several other methods, the principle of separating isotopes by the creation of pseudo gravitational forces in a gas contained in a rapidly rotating centrifuge was extensively studied, but was abandoned in favour of an alternative technique which at that time seemed more promising. Now, however, it seems probable that the gas centrifuge will be seen as the more economic method for future expansion of enrichment capacity, superseding the gaseous diffusion technique which has

formed the basis of all industrial scale plants since the operation of the first of such plants in 1945. The reason for this probable change in emphasis is an interesting example, first of the "spin-off" of technological development in other fields, and secondly, of the effect upon technological development of a changing economic environment. The early centrifuge work was abandoned because materials could not be found thirty years ago to withstand satisfactorily the circumstances involved in rotation at the necessary speeds, and bearings were not at that time available to support such rotating components without unacceptable power losses. Subsequent development of both materials and bearings has, in recent years, so widened the choice open to the centrifuge designer as to offer virtually a completely new field. At the same time the reduction in electric power consumption per unit of output, consequent upon improved centrifuge design, now means that centrifuge plants need consume little more than one-tenth of the electric power required by the gaseous diffusion process. Since sources of low cost power from hydro-electric stations or readily accessible coal resources are rapidly being exhausted in most industrialised countries, a much greater premium now attaches to low power consumption than would have been the case a quarter of a century ago.

The aim of this work is primarily to provide an introduction to the theory of isotope separation by the gas centrifuge for the reader with an interest in the utilisation of the process. In addition, some of the more important engineering considerations bearing on the design of practical gas centrifuges are examined. This is followed by a simplified treatment of the principles involved in arranging centrifuges into cascades capable of achieving both the desired overall degree of enrichment in the ^{235}U isotope and the necessary output of enriched uranium.

Finally, some of the elements of the economics of the process are described; it is these factors, taken in the

context of the overall economic environment in which investments are made and plants are operated, which will dictate the course of future development.

The reader will appreciate that there is much in any treatment of this subject that must be left unsaid. The military implications of uranium enrichment, whilst no longer providing the principal stimulus to development, none the less remain. It would therefore be irresponsible, as well as illegal, to publish any significant engineering detail. Even if this were not so, given the order of magnitude of likely future investment, the detailed solutions to the many engineering problems which are encountered in this field will attract substantial commercial value and are thus unlikely to be published.

2. Principles of Isotope Separation

2.1 METHODS OF ISOTOPE SEPARATION

The existence of isotopes was first suggested by Soddy in 1911, and confirmed by Aston at Cambridge just before the First World War. The first serious discussion of the possibility of their separation was given by Aston and Lindemann in 1919.[1] They recognised four distinct principles on which separation could be based:
(a) distillation (to which chemical separation is closely allied thermodynamically);
(b) diffusion;
(c) density differences;
(d) positive rays or, in modern parlance, methods employing the discrimination of ions by electric or magnetic means.

Many experiments on specific methods of isotope separation were carried out in the 1920s and the 1930s, but it was the effort devoted to finding methods for the separation of uranium isotopes, as part of the development of the atomic bomb during the Second World War, which gave separation development its major impetus. Work in the early war years in the UK, followed by massive effort in the USA as part of the "Manhattan" project,[2] laid the foundations for what is now a major industry producing uranium enriched in the fissile ^{235}U isotope for use in present-day nuclear power reactors.

At the outset of the Manhattan project all of the basic methods which Aston and Lindemann had identified were pursued and carried at least to pilot scale production plants.

ELECTROMAGNETIC SEPARATION

This method utilises the property of a magnetic field so that it can act as a momentum analyser. Ions in the field follow different trajectories depending on their (e/m) values, and the isotopes are collected in separate compartments. Fig. 1 shows the principal features.

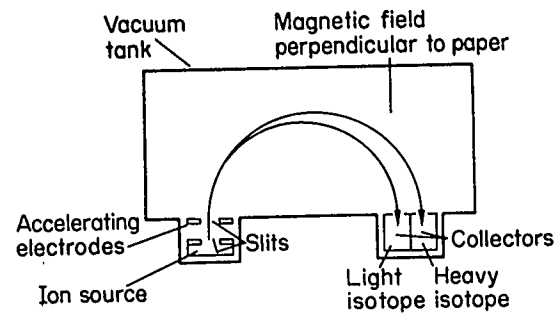

Fig. 1 The electromagnetic process.

Unlike all the other methods, electromagnetic separation does not rely upon physical or chemical means of developing a small initial concentration difference between two streams in contact and then multiplying the elementary effect by cascading or by counter current flow in a column. It provides very large separation factors, almost complete separation being achieved in a single stage. For industrial use, however, this advantage is offset by the severe throughput limitations arising from the problems of producing large quantities of gaseous ions, beam focussing and space charge effects which interfere with the separation process.

Nonetheless, by 1943 sufficient progress had been made in the USA to produce quite substantial quantities of enriched uranium. For small quantities the method is extremely versatile, having been used since the war to separate many isotopes of different elements.

DISTILLATION AND CHEMICAL EXCHANGE

It has been appreciated for some time that for light elements the thermodynamic differences between isotopes are significant. In the production of heavy water particularly, distillation and other thermodynamic methods had been successful. Frequently these methods, for various economic considerations, have been used in conjunction with each other. Differences in the internal vibrational and rotational frequencies between molecules containing different isotopes give rise to differences in free energies and hence differences in vapour pressure which can be utilised in a distillation process for separation. Similar effects also give rise to different equilibrium constants in reversible reactions between compounds containing mixtures of two isotopic substances. The latter effect is today the basis of the most commonly employed method for separating light and heavy water based on the differences in equilibrium constant in the reactions between H_2O and H_2S, and D_2O and D_2S.

Electrolysis can also be used for the production of heavy water. When water is decomposed electrolytically into hydrogen and oxygen, the deuterium content of the hydrogen produced at the cathode is substantially lower than that of the water remaining in the cell, which becomes progressively enriched in deuterium. An electrolytic plant was used in the Manhattan project to refine water from a primary plant using an exchange process.

The separation achieved using the thermodynamic characteristics of elements falls off, however, for heavier elements. This is because the equilibrium effects are related to the zero point energy, and the latter decreases with increasing atomic weight. The separation reduces as $\left(\frac{\Delta M}{M^2}\right)$, where M is the molecular weight and ΔM is the molecular weight difference for the isotopes concerned. Distillation and chemical exchange have not therefore, to

date, become the basis of an industrial scale process for the separation of uranium isotopes in particular.

DIFFUSION

Two diffusion processes for the separation of ^{235}U were investigated in the Manhattan Project. These were thermal and gaseous diffusion. If a temperature gradient is established in a gaseous mixture of two isotopes, a tendency exists for one type of molecule to concentrate in the cold region and the other in the hot region. Clusius and Dickel in 1938[3] pointed out that the temperature gradients necessary to bring about thermal diffusion could also be used to generate a convective circulation in the gas and so make the separation process cumulative. The principle is illustrated in Fig. 2, showing one of over 2,000 columns

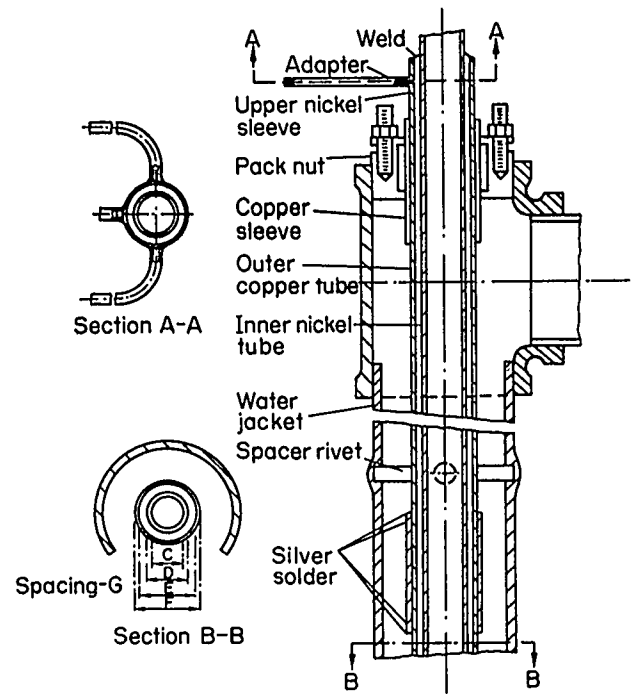

Fig. 2 The liquid thermal diffusion column.[4]

used in the war-time American plant at Oak Ridge for providing a slightly enriched uranium feed to the electromagnetic separation process.[4] A temperature gradient was established across an annular space between two cylinders. The innermost cylinder was steam heated and the outermost pipe was water cooled. The process material was in the form of liquid uranium hexafluoride (UF_6).

Uranium hexafluoride is in fact the only compound of uranium with a gaseous form stable at normal temperatures and pressures. It is the material used in all the methods currently envisaged for the separation of uranium isotopes. Uranium hexafluoride is toxic, highly corrosive, and decomposes on contact with the water in the atmosphere. Its use brings substantial handling problems in the industrial context, but it is fortunate that fluorine is itself monoisotopic, so that complications on this score are avoided.

The gaseous diffusion process is based on the phenomenon of molecular effusion demonstrated by Graham in 1846. The process depends on the fact that the lighter molecules in a mixture of gases in thermal equilibrium strike the walls of the containing vessel more frequently than the heavier molecules. If the walls are perforated by small holes then the lighter species will pass through the walls more readily than the heavier species, so that the escaping gas will be enriched in the lighter component.

The separation achieved is proportional to $\sqrt{\frac{M_2}{M_1}} - 1$ $\left(\text{approximately } \frac{\Delta M}{2M}\right)$. For uranium hexafluoride this is small, the light gas being about 1·0043 times richer in ^{235}U than that of the input gas, and repetition of the process many times in a cascade of stages is necessary, the light fraction from one stage being fed to the next stage above in the cascade.

Work on gaseous diffusion started in the UK and was later developed within the Manhattan project to become the only major industrial process used for uranium isotope separation. Since the war a substantial technology has grown around the gaseous diffusion of uranium hexafluoride, with plants built in the USA, UK, France, Russia and China. The particular fields of development necessary include the manufacture of porous barrier permeated by fine holes and of high performance compressors with special seals between the process gas and atmosphere.

DENSITY DIFFERENCES

It has long been recognised that gravitational separation of isotopes might occur since gravitational forces tending to move molecules are proportional to molecular weights. The centrifuge is a method of applying pseudo gravitational forces of large magnitude.

At the outset of the Manhattan project, the centrifuge method was considered to be one of the most likely to succeed for the separation of uranium, and substantial research and development was devoted to it. However, the engineering problems encountered at that time were severe, and although a pilot plant was constructed and successfully operated, giving results which confirmed the degree of separation predicted by theory, it was then abandoned in favour of gaseous diffusion.

The great appeal of the centrifuge method, as will be seen in the chapters which follow, is that it is a process in which the separation depends on the difference, ΔM, between the molecular weights of the two isotopes as opposed to the fraction, $\Delta M/M$ or $\Delta M/M^2$, characteristic of the other methods. It is therefore well suited to the separation of heavy isotopes and in recent years developments of new materials and bearing systems have again brought the process to the fore for industrial application.

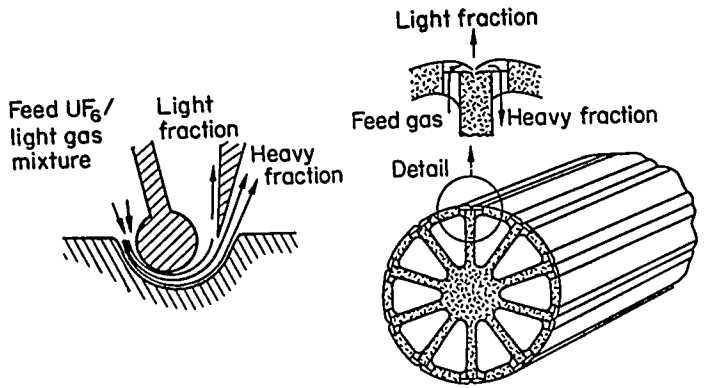

Fig. 3 (Left) The separation nozzle process; (Right) Details of a separating nozzle element (after Becker). (Avery, D. G., "Uranium Enrichment", Physics Bulletin, **21** *(1970).)*

It is worth noting that another method studied in the United Kingdom during the war years, which in part utilises the centrifugal effect, has also been re-examined in recent years.[5,6] The basic arrangement of the so-called nozzle method shown in Fig. 3 is based on Becker's publications. A jet of uranium hexafluoride is expanded through a slit into a volume bounded by a curved wall. The deflection of the jet by the wall results in a partial spatial separation of the components, the gas moving close to the deflecting wall becoming enriched in the heavy isotope, whilst the light isotope accumulates in the remaining fraction. The physics of the process is complex, the predominant effects being pressure diffusion and an additional centrifugal effect. A helium or hydrogen admixture increases the gas velocities, and enhances the separation.

2.2 BASIC ISOTOPE SEPARATION THEORY

Before proceeding to discuss the gas centrifuge in detail, the criteria used for judging an isotope separation process must briefly be discussed.

THE SIMPLE SEPARATION PROCESS FACTOR

All statistical methods of isotope separation are characterised by an elementary effect which is repeated many times in the process. The basic effect is described in terms of a simple separation process factor, α, or a simple process difference, ε.

$$\varepsilon = \alpha - 1$$

The separation factor is defined as the ratio of the relative concentration of the desired isotope after processing to its relative concentration before processing. Thus in a process, if the initial molar fractions of the desired and the other isotope are N and $1 - N$ respectively, and, after processing, the fractions are N' and $1 - N'$, then the simple separation process factor is defined as

$$\alpha = \left(\frac{N'}{1 - N'}\right) \Big/ \left(\frac{N}{1 - N}\right) = \frac{R'}{R}$$

The ratios $R = \dfrac{N}{1 - N}$ and $R' = \dfrac{N'}{1 - N'}$ are frequently called abundance ratios. α is usually only slightly greater than unity, and the quantity $\varepsilon = \alpha - 1$ is often more useful.

However, the separation factor alone is not adequate to describe the separative performance of a separating element. Another measure is necessary which contains the separation factor but which also reflects the rate at which an element can handle process material.

SEPARATIVE POWER

One way of establishing a meaningful measure for the separative performance of an element is as follows. The process of separation may be considered as being one in which the disorder caused by the mixing of isotopes is removed. A given machine or device for separating isotopes

will be capable of giving, during a given time of operation, a certain reduction in the mixing entropy of the substances treated by it. At first sight, this might appear to be a good measure of the useful performance of the machine. However, it is found that the change of entropy caused by the same machine working at a constant rate depends on the composition of the mixture. For a mixture containing two isotopes of concentrations N and $1 - N$ respectively the entropy change caused by the machine is proportional to $N(1 - N)$. This is because, of all possible pairs of molecules upon which the machine can work, it is only upon a fraction $N(1 - N)$, the unlike ones, that work can usefully be done with the purpose of separating them. For a machine handling L moles/sec the separative power can be written as

$$\delta U = \frac{L}{RN} \frac{\Delta S}{(1 - N)} \text{ moles/sec}$$

where ΔS is the entropy change and R the gas constant per mole.

Now the entropy per mole of a mixture of isotopes is greater than that of the constituents by

$$S(N) = R\{N \ln N + (1 - N) \ln(1 - N)\}$$

For a separation device which consumes a quantity L gram molecules/sec of the mixture at concentration N and produces a fraction θL of "product" and a fraction $(1 - \theta)L$ of "waste", expressing the changes in entropy in terms of the changes of concentration, and these in turn in terms of the simple separation process difference gives the following expression for the separative power of the device

$$\delta U = \frac{\theta}{1 - \theta} L \frac{\varepsilon^2}{2} \text{ moles/sec}$$

SEPARATION POTENTIAL AND SEPARATIVE WORK

In addition to the separative power of a machine or separating element, another related quantity is useful in describing the amount of separation that an enrichment plant can achieve. This is the separative work done by the plant. This is best understood by introducing the concept of "separation potential" or "value function" for the process material. Material processed by an element results in an increase in separation potential by an amount which depends on the number of stages the material has been processed by, and is therefore a function of concentration. The separation potential or value function of unit mass of material at concentration N is given by

$$V(N) = (2N - 1) \ln \frac{N}{1 - N} + AN + B$$

where A and B may be chosen arbitrarily, since it is only changes in separation potential which are of interest.

The "value" of an amount F of feed material to a plant at concentration N_F is therefore $F.V(N_F)$. If from a mass F of feed at concentration N_F, two fractions are obtained, a mass P of product at concentration N_P and a mass W of waste at concentration N_W, then the amount of separative work performed will be equal to

$$PV(N_P) + WV(N_W) - FV(N_F)$$

This amount of work can, of course, be achieved by a small plant over a great length of time or a large plant working for a short period of time. It is for this reason that plant capability is expressed in terms of separative power, i.e. the separative work per unit time. Normal units of separative power are kilogrammes or tonnes separative work per annum (kg or tonnes SW.p.a.). The separative power will be seen to be equal to the change in value of the material processed. It will be clear that from the known separative

power of a single element the number of elements required in a plant to give a total plant separative power can be established. The separative work capacity of a plant expressed in the above way is a valuable measure of plant performance, as will be seen in Section 5.

3. Gas Centrifuge

3.1 INTRODUCTION

The use of gravitational or centrifugal fields for the separation of mixtures of gases of different molecular weight is quite an old idea, experiments to this end having been carried out by Bredig as early as 1895.[7] It was Aston and Lindemann in 1919 who first suggested the method for the enrichment of isotopes. Attempts at such a separation were unsuccessful until 1934 when Beams and his co-workers[8–15] developed the vacuum ultracentrifuge, which was free from vibration and was thermally isolated to eliminate convection currents in the gas within the rotor.

An evaporative method was used, following a suggestion by Mulliken,[16] in which batch separation was achieved by introducing the isotopic mixture into the centrifuge in liquid form, hence forming a film on the walls of the rotor. After equilibrium with the vapour phase was established, vapour was removed through a shaft along the axis of the rotor, and it was found that the residual film of liquid on the walls of the rotor was enriched in the heavy isotope. The method was used for partial enrichment of the heavy isotope of chlorine in carbon tetrachloride and bromine in ethyl bromide.

Such a method is not convenient for most applications and a continuous flow method is normally used. The simplest system is a concurrent flow arrangement in which a stream of gas enters the rotor at one end, and two streams are taken off at the other end, at two different radii. As will be seen later, the enrichment achieved is limited to that of a single stage. The most effective way of increasing the enrichment is by establishing a counter current circulation within the centrifuge. In the countercurrent machine (Fig. 4) gas is

injected into the cylinder at a point on the axis in the centre of the rotor. Gas circulation is induced within the rotor either by establishing a small temperature difference between the rotor ends or by introducing some frictional mechanism. The gas then passes in one direction parallel to the axis along the periphery, and in the reverse direction at the smaller radius. Isotope transport between the streams occurs as in the concurrent device but, due to the recirculation, the separation achieved exceeds that of a single stage. The greatest difference in concentration occurs between the ends of the machine, and it is from these points that the enriched and depleted fractions are extracted using, in the arrangement shown, scoop pipes which utilise the hydrodynamic forces on the rotating gas to generate the pressure necessary to transport the gas fractions from the machine.

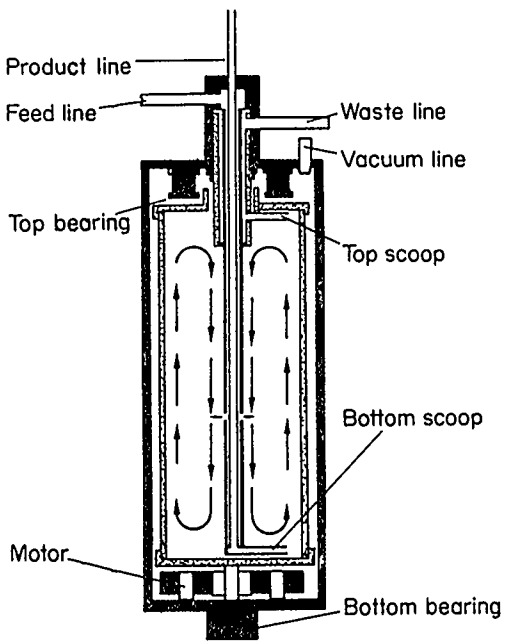

Fig. 4 A counter current centrifuge. (*Avery, D. G., "Uranium Enrichment"*, Physics Bulletin, **21** (*1970*).)

3.2 THEORY OF THE CENTRIFUGE

SIMPLE PROCESS SEPARATION FACTOR FOR A CENTRIFUGE

Consider the gas in an annulus at radius a within the centrifuge. Let the thickness of the element be δa, the angle subtended by it at the centre of the centrifuge be $\delta\theta$ and hence its length $a\delta\theta$. Consider unit length of centrifuge and let the gas density be ρ. The mass of gas in the element is $\rho(a\delta\theta)\,\delta a$.

The central force acting on the gas element by virtue of its rotation is

$$\rho(a\delta\theta)\,\delta a\, a\omega^2$$

where ω is the angular velocity of the rotation.

This force is generated by a radial pressure gradient. Let the change in pressure over the radial increment δa be given by δp. The force it produces on the small slab of gas is $\frac{\partial p}{\partial a}\delta a\, a\, \delta\theta$. Equating these forces, and replacing ρ by $\frac{MP}{RT}$ gives

$$\frac{dp}{p} = \frac{M\omega^2 a\delta a}{RT}$$

which integrates to $p = p_0\, e^{\frac{M\omega^2 a^2}{2RT}}$, where p_0 is the pressure at the axis of the centrifuge. When two gases of molecular weights M_1 and M_2 are involved, the respective partial pressures are given by

$$p_1(a) = p_1(o)\exp\left\{\frac{M_1\omega^2 a^2}{2RT}\right\}$$

and

$$p_2(a) = p_2(o) \exp\left\{\frac{M_2\omega^2a^2}{2RT}\right\}$$

The distribution of light and heavy isotopes in a centrifuge is shown in Fig. 5.

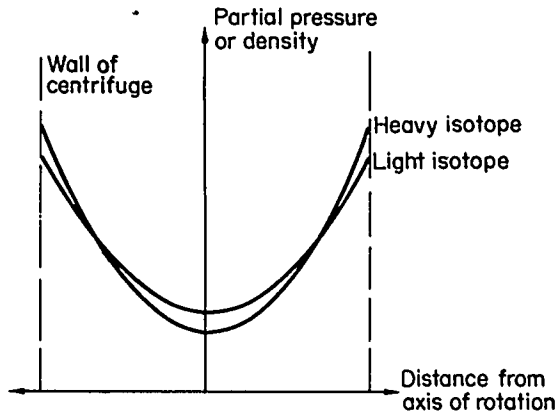

Fig. 5 Distribution of light and heavy molecules in a centrifuge. (*Geoghegan, G. R. H., "Uranium Isotope Separation"*, New Scientist, **5** (*February 1959*).)

From this the ratio of concentrations at the axis and at the wall is

$$\left\{\frac{N}{1-N}\right\}_{a_2} = \left\{\frac{N}{N-1}\right\}_0 \exp\left\{\frac{(M_1 - M_2)(\omega a_2)^2}{2RT}\right\}$$

where a_2 is the radius at the wall of the rotor. For $M_2 > M_1$ this gives for the simple process separation factor

$$\alpha_0 = \exp\left(\frac{(M_2 - M_1)(\omega a_2)^2}{2RT}\right)$$

or for the case where α_0 does not greatly exceed unity

$$\alpha_0 = 1 + \frac{(M_2 - M_1)(\omega a_2)^2}{2RT}.$$

The pressure ratio ($P_{\text{wall}}/p_{\text{axis}}$) varies enormously with peripheral speed.

Speed	*Pressure Ratio*
300 m/s	550/1
400 m/s	77,600/1
500 m/s	$3{\cdot}9 \times 10^7/1$

The separation factor achieved is large compared with that for a single stage of gaseous diffusion. In the latter case the ideal separation factor for ^{235}U and ^{238}U is 1·0043, which compares with 1·055 for a centrifuge having a peripheral speed of 300 m/s.

MAXIMUM SEPARATIVE POWER OF A CENTRIFUGE

It may be shown following Cohen (who attributes the proof to Dirac), (Appendix I) that the maximum separative power of a centrifuge is given by

$$(\delta U)_{\max} = \frac{Dp}{RT}\left[\frac{(M_2 - M_1)(\omega a_2)^2}{2RT}\right]^2 \frac{\pi Z}{2} \text{ moles/sec}$$

$$= D\rho\left[\frac{(M_2 - M_1)(\omega a_2)^2}{2RT}\right]^2 \frac{\pi Z}{2} \text{ g/s}$$

The expression indicates the desirability of

(i) low temperature operation, since the theoretical maximum separative power of a centrifuge varies inversely as the temperature;

(ii) long rotors, since the separative power is proportional to length. It should be noted that for a constant peripheral

velocity the separation and separative power are independent of the radius. The radius influences the hold up of the rotor;

(iii) high peripheral velocity (ωa_2), since the theoretical separative power varies as the fourth power of the peripheral speed.

Furthermore, it is to be noted that

(iv) the separative power does not depend directly on the density, ρ, because the diffusion constant, D, is proportional to $\frac{1}{\rho}$. Density does, however, indirectly affect the performance of a centrifuge, since the internal circulation rate depends upon it.

GENERAL PARTIAL DIFFERENTIAL EQUATION FOR A CENTRIFUGE

From the preceding sections the density distribution in the centrifuge is given by

$$\rho = \rho_0 \exp \frac{M\omega^2 a^2}{2RT}$$

This results from a dynamic equilibrium between the effect of random motion of the molecules (diffusion), which tends to erase density gradients, and the effect of the centrifugal field, which tries to pile all the molecules at the periphery.

Consider a centrifuge containing a perfect binary gas mixture, which is assumed to rotate uniformly at the same speed as the rotor, i.e. ω radians per second, to have no other motions and to be isothermal. In order to achieve a separation of the two components of a binary gas mixture, the gas as a whole may flow in the radial and axial directions. In a cylindrical co-ordinate system, having its z axis

along the rotor axis and rotating with the gas, the drift velocity of the gas has the components.

Radial $u = u(a, z)$
Azimuthal $v = 0$
Axial $w = w(a, z)$

Because of this motion of the gas the isotopic equilibrium condition is continually upset. The system moves material in an effort to re-establish equilibrium, and in this way a transport of the desired material is set up.

Examining the amount of the desired isotope which flows during the time, t, through the surface of a small cylindrical ring between the radii $a = a_0$ and $a = a_0 + \delta a$, and the heights $z = z_0$ and $z = z_0 + \delta z$, the change in concentration of the desired isotope is calculated in this volume element. This concentration change (Appendix II, following Cohen) leads to the partial differential equation of the centrifugal separation

$$p\frac{\partial N}{\partial t} = \frac{Dp}{a}\frac{\partial}{\partial a}\left[a\frac{\partial N}{\partial a} + \frac{(M_2 - M_1)\omega^2 a^2}{RT}N(1 - N)\right] - \frac{1}{a}\frac{\partial}{\partial a}(Npau) - \frac{\partial}{\partial z}(Npw) + D\frac{\partial^2}{\partial z^2}(Np)$$

The equation is general and holds for all types of gas centrifuges—in particular:—

(i) *The Evaporative Centrifuge*

In this type, a small amount of liquid is introduced into the centrifuge, forming a layer at the periphery. During the spinning of the rotor, vapour is removed slowly through a shaft along the axis ($w = 0$, $au = \text{const}$).

(ii) *Concurrent Centrifuge*

In the concurrent centrifuge, as originally conceived, a

single stream of gas enters one end of the rotor through a hollow shaft, and two streams are taken off at the other end, one from the periphery and the other near the axis. The method produces a small change in concentration per machine ($u = 0$, $w = w(a, z)$).

(iii) *Countercurrent Flow Centrifuge*
The countercurrent flow type of centrifuge was designed to attain considerable separation in a single centrifuge, thus reducing the number of stages required and the amount of material circulated between stages ($u = 0$, $w = w(a, z)$).

Only the concurrent and countercurrent types of centrifuges will be discussed here, and the former only briefly.

3.3 TYPES OF CENTRIFUGE

THE CONCURRENT CENTRIFUGE

One form of the concurrent or flow through method of centrifuging consists of introducing the mixture to be separated into one end of a tubular centrifuge and collecting it in two separate fractions (light and heavy) at the other end (Fig. 6).

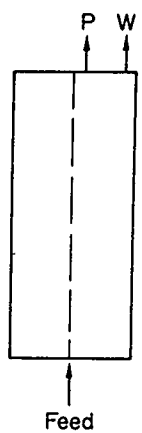

Fig. 6 A concurrent centrifuge.

This method was first used successfully for the separation of the isotopes of chlorine in ethylchloride, and essentially the same apparatus was used for separating nitrogen and carbon dioxide mixtures, and hydrogen and carbon dioxide mixtures.

It is possible for the gas entry conditions to be arranged in such a way that the material to be centrifuged enters the

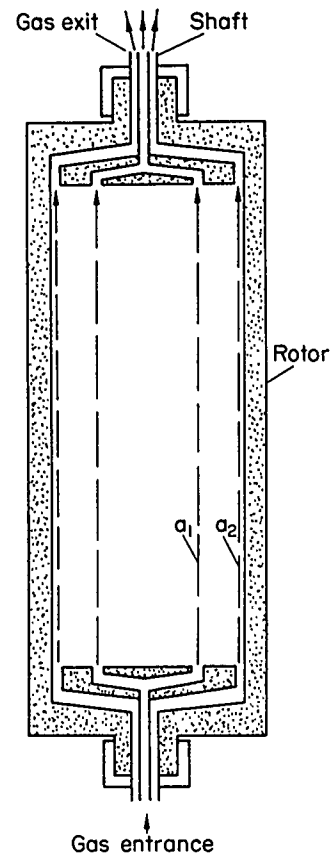

Fig. 7 A concurrent centrifuge.[17] *(Reproduced by kind permission of the United States Atomic Energy Commission.)*

rotor through a hollow shaft, which is divided so that two separate streams can pass through it. The end caps are constructed so that the material enters the rotor in two thin cylindrical coaxial streams of radii a_1 and a_2.

The two streams are supposed to flow through the tube as shown in Fig. 7 and to be collected at distances a_1 and a_2 from the axis, respectively, at the opposite end of the spinning tube. Because of the centrifugal field, transport takes place between the two streams in such a way that the outer stream is enriched in the heavy isotope or component, while the inner stream is enriched in the light isotope or component. In the device axial flow is used to obtain an axial as well as a radial concentration gradient. The concurrent centrifuge is a simple process machine and the enrichment factor per machine is limited to α_0.

$\alpha_0 = \exp\left(\frac{\Delta M . V^2}{2RT}\right)$ where V is the peripheral speed of the machine.

This is in the so-called steady state condition with no throughput. As the throughput L of the machine is increased, the separation achieved is decreased (Fig. 8). Cohen,[17] gives a theoretical treatment of the problem based on the work of Murphree. It is shown that the optimum position for the inner stream is not at the axis. This is because the separative power is the product of the concentration difference and the transport. The concentration difference is a maximum when $a_1/a_2 = 0$, but the transport through the cylinder of radius zero is zero. The transport is a maximum when a_1/a_2 is unity, but the concentration difference is zero. The maximum of the product lies somewhere in between.

For a machine with two cylindrical shells, as shown in Fig. 7, the optimum value occurs at a ratio $a_1/a_2 = 0{\cdot}534$

giving a separative power which is 81·45 per cent of the theoretical maximum. For a single entrance machine (Fig. 6) the separative power achieved is now reduced to 66·34 per cent of the theoretical maximum.

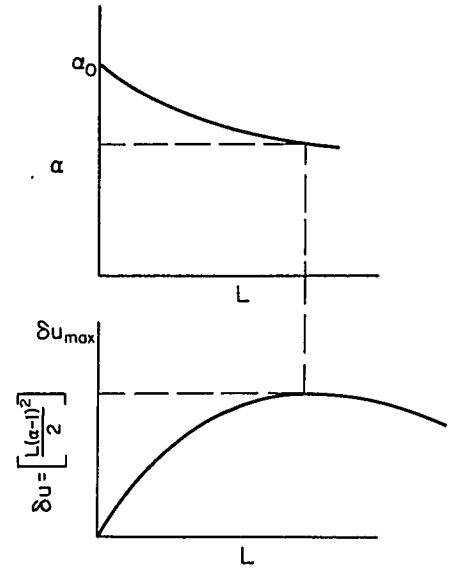

Fig. 8 Separative factor and separative power for a concurrent centrifuge.

The concurrent centrifuge has the following disadvantages:

(a) the take off pressures for the light and heavy fractions are different and the pressure can be low for the light fraction close to the axis;

(b) the stage enrichment is small. Since the separative power is the same for concurrent and countercurrent centrifuges of the same dimensions if they operate at the same speed, it follows that the throughput of a concurrent machine must be many times that of the equivalent countercurrent machine.

Multiplication of the Simple Process Difference

The first method for multiplying the simple process difference was used in the evaporative centrifuge, in which the mixture of isotopes to be separated lies at the wall of the rotor as a liquid film, while vapour enriched in the light isotope is tapped off at the axis, so that the enrichment of the heavy isotope in the remaining liquid is multiplied.

Another method was suggested in Germany during the war years.[18] In Harteck's Oscillation Centrifuge (Fig. 9) the single separating stage is multiplied by an oscillating flow of the isotopic mixture through suitably arranged chambers inside the rotor.

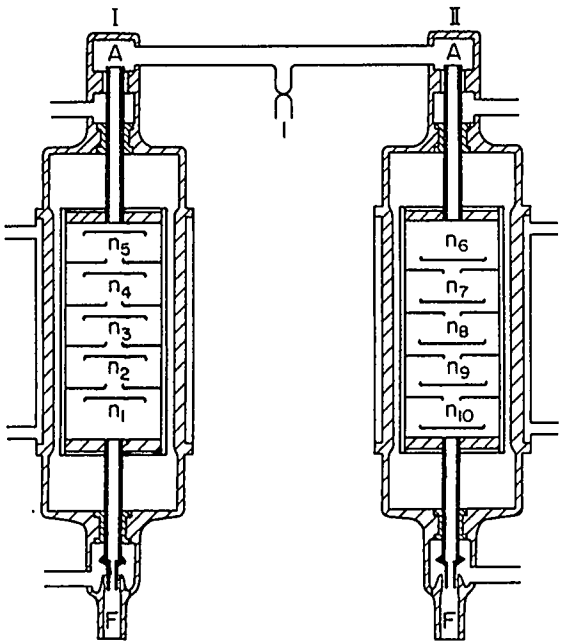

Fig. 9 Harteck's oscillation centrifuge.[4]

The principle of the method consists of subdividing the rotor into separate compartments, which are interconnected by channels in the dividing walls in such a way that

the inner part of each compartment communicates with the outer part of the next compartment. By means of the oscillating of gas through the compartments, the isotope distribution along the axis of a compartment is forced into equilibrium with that at the outer wall of the next, giving rise to a kind of "column" effect through the machine. The oscillating current of gas can be forced between the compartments either by suitable arrangement from outside or by periodic changes in the speed of rotation of two centrifuges side by side and oppositely connected; the current of gas is made to oscillate by the resulting fluctuations in pressure along the axis of the two centrifuge rotors.

In the double assembly type, shown in Fig. 9, the starting mixture is delivered into the tubes connecting the two centrifuges at 1; the light isotope is enriched in Arm I of the double centrifuge and impoverished in Arm II.

THE COUNTERCURRENT CENTRIFUGE

General

The most successful method of multiplying the simple process difference has been found to be the countercurrent centrifuge. Beams[19] and his collaborators in the USA, and Groth[22–23] and his collaborators in Germany were able to show that this method could be used successfully for increasing the change of concentration of the desired uranium isotope, and that agreement between theory and experiment was good.

In the countercurrent centrifuge the separation factor of a single process is multiplied several times. An axial countercurrent is produced, flowing in the inner part of the rotor in one direction and along the walls of the rotor in the opposite direction. An axial concentration gradient is then

formed. The advantages of the countercurrent centrifuge are:

(i) since a high separation factor can be obtained in a single unit, the amount of gas to be transported between units may be much less than for other methods, and the construction of complete plants is simplified;

(ii) both fractions can be extracted from the periphery, where the pressure is high, and therefore the take off problems are eased;

(iii) the number of stages required to achieve a given enrichment is very much reduced;

There are two types of countercurrent centrifuges:

(i) individual streamed type of countercurrent machines;

(ii) machines using internal recirculation, which can be mechanically or thermally induced.

Principle of Countercurrent Machine

The process of centrifuging a binary gas mixture leads, as has been shown, to a radial concentration gradient. By setting up internal gas circulation within a machine, it is possible to disturb this equilibrium and to establish an axial concentration of a comparable magnitude. Provided that the length of the machine is much greater than its diameter, a correspondingly greater axial concentration gradient can be produced. It is important to note again that the use of countercurrent flows does not lead to an increase in the separative power of the machine since the machine has a lower throughput than the concurrent machine.

Partial Differential Equation of the Countercurrent Centrifuge

The generalised partial differential equation given in Appendix II becomes, for the case of the countercurrent centrifuge,

$$p\frac{\partial N}{\partial t} = \frac{Dp}{a}\frac{\partial}{\partial a}\left[a\frac{\partial N}{\partial a} + \frac{(M_2 - M_1)\omega^2}{RT}a^2N(1-N)\right] - pw(a)\frac{\partial N}{\partial z} + Dp\frac{\partial^2 N}{\partial z^2}$$

The method of solution, following Cohen, is given in Appendix III.

It is shown that the concentration change produced by the centrifuge is a function of the recirculation and through flows. The maximum value of $\frac{N(Z)}{N(O)}$ for any given value of recirculation flow is greatest when the rate of production from the centrifuge is zero. There is also a particular value of recirculation flow for which $\frac{N(Z)}{N(O)}$ is greatest; for small flows, the effects of axial diffusion will depress the axial concentration gradient, while for large flows the radial diffusion cannot transport the isotopes from one stream to the other sufficiently fast. It is convenient to express the results in terms of $m = \frac{S}{S_0}$, which is the rate of the internal flow S, to the internal flow S_0 which makes the separation a maximum at zero product flow.

The concentration ratio end to end of a centrifuge of length Z is then given by

$$\frac{N(Z)}{N(O)} = \frac{(1+\psi)\exp\left[2\varepsilon_0 Z\frac{2m}{1+m^2}(1+\psi)\right]}{1+\psi\exp\left[2\varepsilon_0 Z\frac{2m}{1+m^2}(1+\psi)\right]}$$

where the dimensionless parameter ψ and ε_0 are complicated functions of the flows and flow profiles.

The variation of separation factor with recirculation flow is shown schematically in Fig. 10 for various product rates.

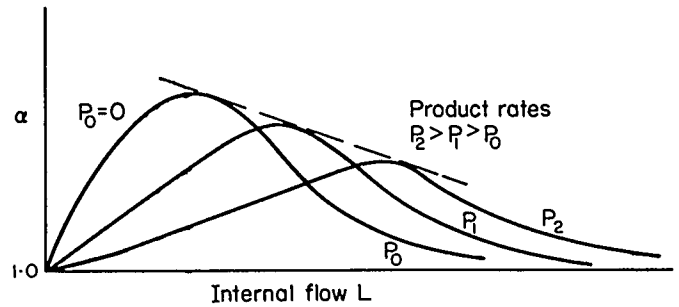

Fig. 10 Separation factor for a counter current centrifuge for various withdrawal rates, P_0, P_1, P_2.

The maximum theoretical separation factor between light and heavy fractions is obtained for zero withdrawal. For a countercurrent centrifuge it is

$$\alpha_{max} = \exp\left[\frac{(M_1 - M_2)a^2\omega^2}{2RT} Z\frac{\sqrt{2}}{d}\right]$$

where Z is the length and d the diameter of the rotor.

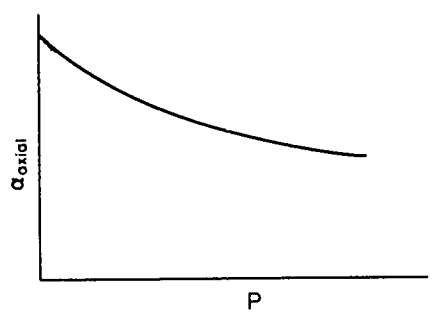

Fig. 11 Separation factor versus external flow for a counter current centrifuge.

For a given withdrawal rate P, the separation factor passes through a maximum as the recirculation flow increases; the reason is that when the recirculation flow is small, the axial concentration gradient it can establish is small, but when the recirculation flow is extremely large, the concentration gradients within the machine are destroyed.

Separation factor may also be presented as a function of the external flow, see Fig. 11, where the peaks of the curve in Fig. 10 have been plotted against external flow.

The variation of separative power with throughput P is shown in Fig. 12. Separative power increases asymptotically to δU_{max} at high values of throughput, since at high flows, the axial concentration is small and the effect of back diffusion is also small. At each value of throughput there is an optimum value of m (the internal flow ratio), and m increases with P. High circulation and throughput rates with low separation factor are therefore desirable, as, under these conditions, the effects of axial back diffusion are minimised.

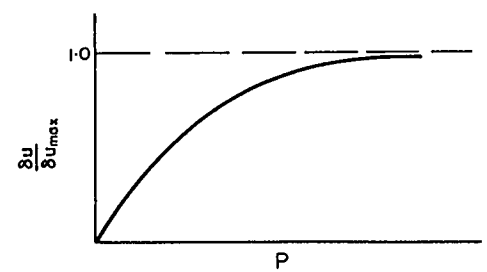

Fig. 12 The variation of separative power with throughput for a counter current centrifuge.

The equation for the separative power is

$$\delta U = \frac{C_1^2}{4C_3} Z \frac{m^2}{1 + m^2}$$

where C_1 and C_3 are integrals involving the flow profile. The largest value of this is reached asymptotically as $m \rightarrow \infty$. The limiting value of δU is approached very rapidly. When $m = 3$ the separative power is 90 per cent, and when $m = 5$ it is 96 per cent of its maximum value. The concentration gradient which is proportional to $\frac{2m}{1 + m^2}$ attains, at these values of m, 60 per cent and 38 per cent respectively of the maximum value.

The separative power can be evaluated from the experimentally determined values of flow and concentration using the relationship already noted in Section 2.2 which expresses separative power in terms of the change in value of processed material

$$\delta U = PV(N_P) + WV(N_W) - FV(N_F)$$

where N_P, N_W and N_F are respectively the concentrations of product P, waste W, and feed F, and $V(N_P)$, $V(N_W)$ and $V(N_F)$ their associated value functions.

THE SEPARATIVE EFFICIENCY OF A GAS CENTRIFUGE

The separative efficiency of a centrifuge can be defined as follows in terms of the separative work

$$E = \frac{\delta U_{\text{expt}}}{\delta U_{\max}}$$

where $\delta U_{\max}$ is the maximum separative power as developed earlier. The separative efficiency may be considered to be the product of four efficiency factors, three of which are capable of theoretical evaluation,[24]

$$E = E_C E_I E_E E_F$$

E_C is the circulation efficiency developed already and is

equal to $\frac{m^2}{1 + m^2}$, E_I is the non-ideality efficiency, which takes into account the difference between the centrifuge, which acts as a square cascade (Fig. 13), and an ideal cascade.

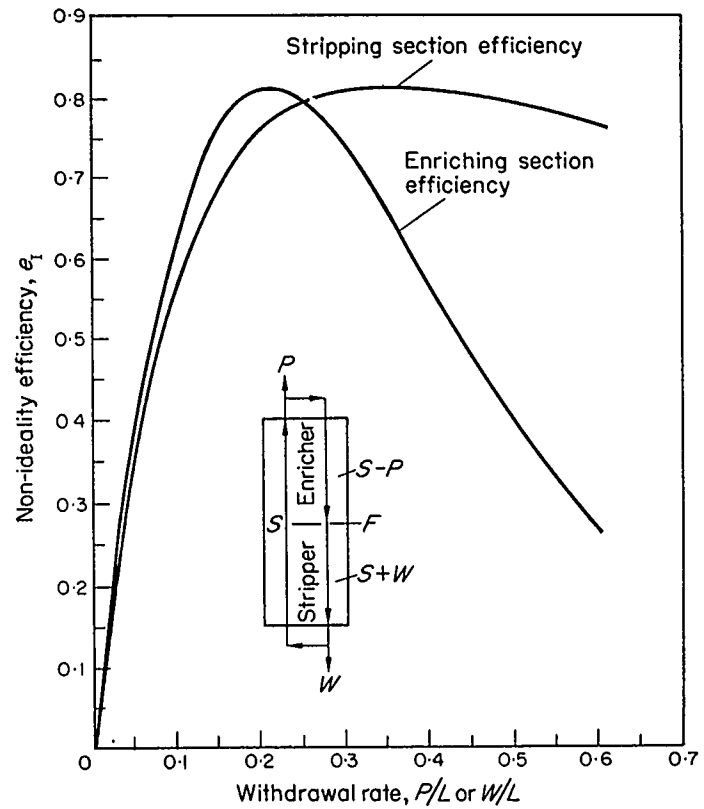

Fig. 13 The non-ideality efficiency factor for a five stage enricher and stripper as a function of the product or waste withdrawal rate.[24]

It is a feature of any cascade that the separative power of any element in it is greater when the flow through that element is related in a particular way to the withdrawal

rate from the cascade, the withdrawal concentration and the concentration at that point in the cascade. In an ideal cascade the elements are so optimised that this condition is satisfied everywhere in the cascade. In a square cascade this condition can at most be satisfied in two places, in the rectifier and in the stripper. The best that can be achieved for a square cascade is to keep to a minimum the mixing losses which arise because the actual flow departs from the ideal flow. The non-ideality factor is a measure of this averaged over the machine.

The non-ideality efficiency factor thus imposes a maximum efficiency of 81 per cent for a square cascade of the single feed type. Efficiency varies with withdrawal rate as in Fig. 15. If, however, multiple feed and/or product arrangements are used then a higher efficiency can be achieved.

E_E is an efficiency factor which includes all phenomena such as turbulence and end effects.

E_F is the flow pattern or profile efficiency and depends upon the shape of the velocity profile in the circulating gas. This will be discussed in more detail in the following section.

FLOW PROFILE EFFICIENCY FOR VARIOUS ARRANGEMENTS

Ideal Flow Profile

Ideally in a countercurrent centrifuge the circulatory flow should consist of one stream in the form of a very thin layer near its periphery, and an equal return stream spread out inside the rotor across the remainder of the cross section (Fig. 14(a)).

The velocity of the gas in the stream varies with radial position in such a way that the axial mass flow is constant. In this profile the gas velocity at the centre for high speeds of operation would be several orders of magnitude larger than that near the periphery, making it impossible to achieve the ideal profile in practice.

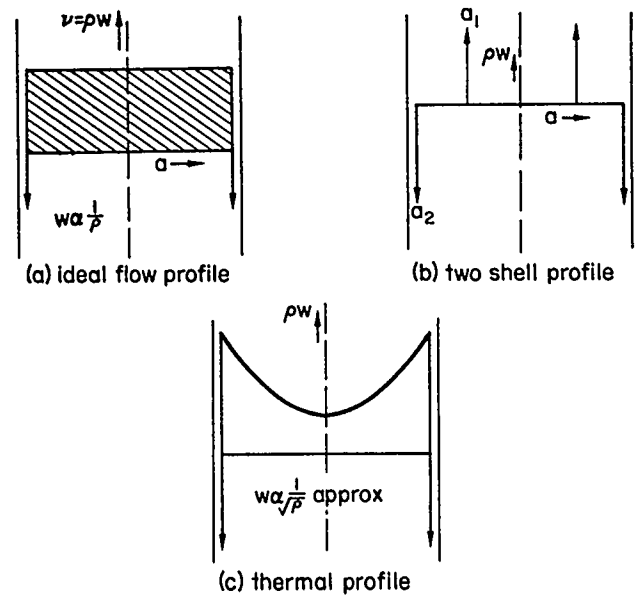

Fig. 14 Flow profiles.

Although the ideal velocity profile cannot be achieved in practice, countercurrent flow with various velocity profiles can be induced by introducing some asymmetry at the ends of the rotor. Two ways of achieving this are:

(a) by confining the return flow into a narrow annulus giving rise to a "two shell" profile;

(b) by making one end cap hotter than the gas and the other colder, hence giving a thermal convection profile.

Two Shell Profile

The two shell profile is shown in Fig. 14(b). The outer stream is still a thin layer at the periphery and the inner stream—instead of being spread out across the rest of the cross section—is arranged to be another thin layer at an intermediate radius.

Thermal Profile
A velocity distribution, which somewhat resembles the ideal one, is created if one end of the rotor is maintained above the mean gas temperature and the other below. The mass flow profile corresponding to this is shown in Fig. 14(c).

A brief theoretical treatment of the three types of profile is given in Appendix IV.

4. Engineering Design of Centrifuges

The maximum theoretical separative power of a centrifuge is proportional to ZV^4, where Z is the length and V the peripheral velocity. This relationship places a premium on achieving high peripheral velocities. The separative power is also proportional to the length of the centrifuge, but for constant peripheral velocity, the separative power is independent of the radius. The radius, however, influences the hold up of the rotor. The choice of rotor material governs the peripheral velocity, and the length is determined from bearing considerations.

CHOICE OF ROTOR MATERIAL

As the rotor of a gas centrifuge contains a relatively small amount of process material, it is mainly the rotation of its own mass which produces the circumferential stresses. It is found that the peripheral speed of the rotor is limited by the ratio of the tensile strength of the material to its density.

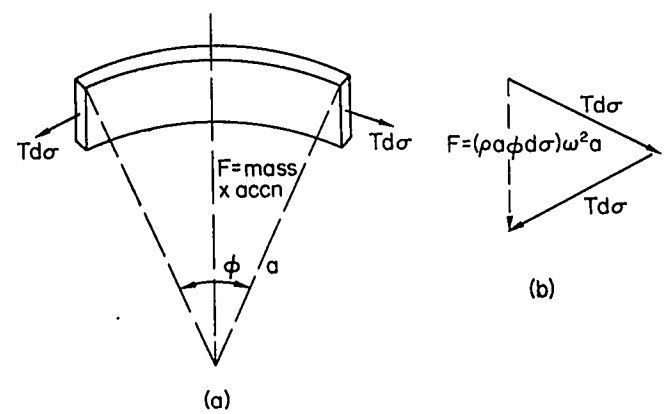

Fig. 15 Stresses in a rotor.

Consider the resultant of the forces acting on a sector of the rotor wall of cross-sectional area $d\sigma$ (shaded) and subtending a small angle ϕ at the centre of the rotor—Fig. 15(a).

The triangle of forces (Fig. 15(b)) gives

$$(\rho a\phi \, d\sigma)\omega^2 a = 2T \, d\sigma \sin\frac{\phi}{2} \simeq T \, d\sigma\phi$$

$$V^2 = \omega^2 a^2 = \frac{T}{\rho}$$

where T is the stress in the rotor wall and ρ is the density of the rotor material. The rotor will break when $T = (\rho\omega^2 a^2)$ is greater than the tensile strength of the material of the rotor. Thus, in general, the choice of material would be that for which the ratio of strength to density is greatest. A short list of some possible materials for rotors capable of high rotational speeds is given below.

Table 1
Materials

	TENSILE STRENGTH kg/cm²	DENSITY g/cm³	MAXIMUM THEORETICALLY PERMISSIBLE SPEED FOR THIN-WALLED CYLINDRICAL ROTOR m/s
Aluminium alloys	4,570	2·8	401
High tensile steel	14,080	7·8	423
Maraging steel	19,700	7·8	497
Titanium	9,150	4·6	450
Glass fibre	5,000	1·8	530
Carbon fibre/resin	8,450	1·6	730

In practice the criterion for the choice of material is that, if a long life is required for the machines, the stress must be limited to a level at which the creep strain of the chosen material over the design life of the component is acceptable.

Uranium hexafluoride is a corrosive gas, so that corrosion problems also greatly limit the choice of material suitable for components for the centrifuge which will be exposed to the gas.

CHOICE OF ROTOR LENGTH

The maximum separative power of a centrifuge is proportional to its length, so that it is clearly advantageous to lengthen the centrifuge as much as possible. The problem which arises, however, is that of flexural vibration, since at certain speeds resonant vibrations occur in the rotor, and these have to be overcome by design of suitable bearings. A long machine will vibrate transversely at a certain critical frequency, and in order to avoid this the length is usually restricted. The resulting machine is called a subcritical machine.

In theory, the centrifuges can be lengthened without limit and still be subcritical if the diameter is increased in proportion. However, the increased size would bring with it cost penalties. Since separative power is proportional to length and the ratio of length to diameter (Z/d) is limited from stability considerations, the separative power increases only with the cube root of its volume. This alone would suggest that large machines would give the lower cost per unit output, but since the cost of fabrication will probably vary much less rapidly with size, a compromise has to be found. It must also be borne in mind that increase in the rotor weight accentuates the bearing problems and increases the power consumption.

Special bearing arrangements are necessary if rotors are to be used whose Z/d ratios are greater than the critical value.

Such rotors are termed "super critical". The length of rotor must be chosen so that operational speed is not too near any one of the various resonance frequencies in the complete rotor/bearing system.

CHOICE OF ROTOR THICKNESS

The thickness of the rotor wall does not feature in any of the design equations so far given, but it is clearly a consideration in both the weight of the rotor and its cost. The main consideration is that the material must be fabricated into tubes of nearly uniform wall thickness. The out-of-balance forces at high speeds of rotation would be so great if the tube was spun about its geometric axis that, in common with many rotational devices, it is necessary to allow some flexibility in bearings so that at high speeds the tube spins about its mass axis. The need to keep the distance between centre of geometry and centre of mass small imposes stringent tolerances on the dimensions of the rotor with respect to wall thickness, straightness and circularity.

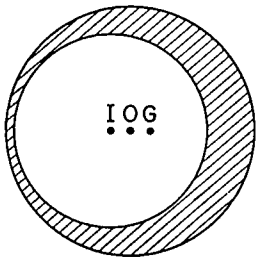

Fig. 16 Section through a rotor.

Consider Fig. 16, where O is the centre of the outer surface, G the centre of mass and I the geometric centre of the inner surface.

Let $IO = q$ be the eccentricity
$OG = \Delta$, the distance between the centre of mass and the centre of geometry
$t =$ mean thickness of rotor wall

Consider unit length of rotor

$$\text{Volume of "billet"} = \pi a^2$$

$$\text{Volume of "hole"} = \pi(a - t)^2$$

$$\pi a^2(OG) = \pi(a - t)^2(IG)$$

$$\pi a^2(\Delta) = \pi(a - t)^2(\Delta + q)$$

which after expansion gives

$$q = \frac{2\Delta . t}{a}$$

In order to keep the distance, Δ, between the centres of geometry and mass small, then clearly q must be even smaller. The values of q actually achievable in a production process then determine the thickness which can be used.

Straightness of the rotor is also an important consideration since it also affects the distance between centres of geometry and mass.

BEARING DESIGN

For the bearing and dynamic stabilisation of long cylindrical rotors many possibilities have been suggested and tested. Conventional journal bearings have the disadvantage that they consume a lot of power per bearing, and sealing problems are introduced between the lubricant and the process gas. Such a bearing is described as part of the Groth Machine in the following section.

Two further bearing types are described as part of the Zippe machine in the next section. In this the lower end of the rotor is carried on a needle which rests in a depression in a metal plate, the lateral movement of which is damped

by oil. The upper bearing is provided by the magnetic coupling between the rotor and a permanent magnet suspended from the outer casing of the machine.

VACUUM CASING AND MACHINE MOUNTING

The rotor of the centrifuge usually spins in a vacuum tight casing, to minimise the drag on the rotating components. A rotor at speed has large kinetic energy, which would be suddenly released in the event of a machine failure. It is essential that the failure of one machine should not cause the failure of adjacent machines. The vacuum casing must therefore be designed to contain the debris from a failed machine so that the vacuum integrity of the system is not breached.

COMPONENT AND MACHINE LIFE

The running cost of centrifuge plant is clearly related to the replacement rate of machines and this in turn depends on the life of the machine. The rotating parts of the machine, e.g. rotor and end masses are under stress and it is for these that, in the interests of achieving high rotational speeds, the safety limits are most likely to be narrowed. Stresses in the rotor wall, for example, are of magnitude ρV^2 where ρ is the density of material and V the peripheral speed. It is therefore of interest to investigate the life of component parts and also of whole machines. In addition to spontaneous fracture due to high stresses, long term creep of the materials is of interest and must be borne in mind at the design stage for machines in specifying appropriate engineering tolerances.

In respect of journal or pivot bearings an important criterion over a period of several years of operation is the wear, and this would normally be investigated for a range of likely loading conditions.

DESCRIPTION OF PRACTICAL CENTRIFUGES

Several countercurrent centrifuges have been described in

the literature. Here, a brief description is given of two of these—one by Groth, and the other by Zippe.

The Groth Centrifuge

The development of the Groth centrifuge is based on principles first advanced by Beams,[11] and illustrated in Fig. 17.

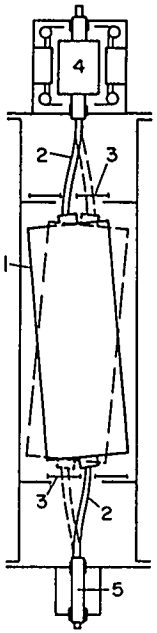

Fig. 17 Principle of the beams centrifuge. ("The Separation of Isotopes", London, H. (ed.), Newnes (1961).)

The cylindrically shaped rotor 1 is suspended in a vertical axis of rotation from a thin, highly elastic, double walled tubular shaft 2 which serves as entry and exit for the gases and is connected to the motor drive. At the bottom a second tubular shaft is found which also serves as a gas duct. Special damping bearings 3 are installed for the stabilisation of rotor movements.

Groth [20–23] has described in detail several of his centrifuges, models UZ 111 B, ZG 3, and ZG 5. Fig. 18 gives a vertical section through the ZG 5 model.

The rotor, *R*, spins in a cylindrical vacuum tight casing, which is either evacuated or filled with hydrogen at low pressure. The casing is supported by two concrete pillars not shown in the figure. Gas is introduced from a gas supply, *V*, through a stationary central tube, R_1, and pumped out by the scoops S_1 and S_2 through a thin tubular shaft to take off points, Z_1 and Z_2, for enriched and depleted fractions respectively. The tubular shafts along which these fractions pass rotate in labyrinth bearings, D_1, D_2, D_3 and D_4; these are of special design and are lubricated with fluorinated oils, giving a gas tight seal of the rotor. The scoops, S_1 and S_2, are located in baffle chambers, K_1 and K_2, at the ends of the rotor which serve to prevent the internal gas flow pattern from being disturbed. Countercurrent flow is achieved by maintaining a temperature difference between the ends of the rotor. The top end of the rotor is heated by eddy currents produced by an electromagnet, *E*, in an aluminium ring forming part of the rotor. The bottom end cap is cooled by radiation to a cooling coil, *K*.

In addition to providing suitable conductive paths for the gas fractions the tubular shafts fulfil another function. Together with damping bearings they ensure stability of motion of the rotor.

The highly elastic shafts relieve the bearings as much as possible of the load caused by the unbalance in the rotor. The axial load of the rotating system is carried by a low friction thrust bearing, which also damps vertical oscillations. Damping bearings are also provided which oppose lateral shift of the shafts, and prevent any precession of the rotor as a gyroscope.

R, *rotor;*
R_1, *stationary shaft;*
T, *Teflon seal;*
K_1, K_2, *chambers for gas scoops;*
V, *gas supply;*
M, *manometer;*
Z_1, Z_2, *tapping points for enriched and depleted gas;*
P_1, P_2, *vacuum chambers;*
E, *electromagnet for eddy current heating;*
Th_1, Th_2, *temperature measuring devices;*
K, *cooling coil;*
D_1, D_2, D_3, D_4, *labyrinth seals.*[24]

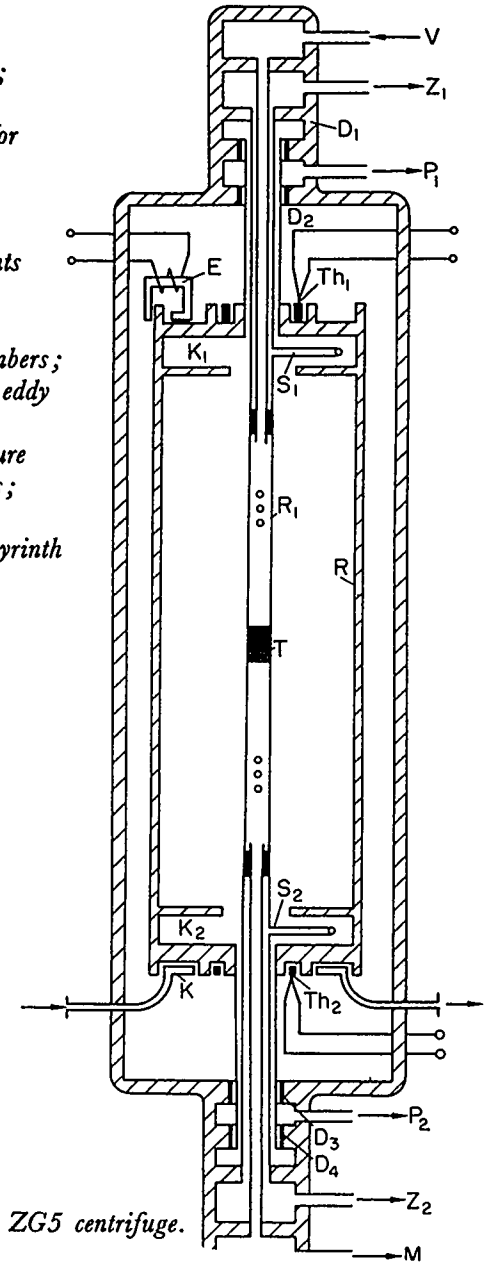

Fig. 18 The Groth ZG5 centrifuge.

Table 2

	LENGTH (Z) cm	RADIUS *a* cm	RATIO LENGTH (Z) / DIAMETER (*d*)	PERIPHERAL SPEED *V* m/s
UZ 1	40·0	6·0	3·33	302
UZ 111 B	63·5	6·7	4·74	302
ZG 3	66·5	9·25	3·60	302
5	113·0	9·25	7·03	302
6	240·0	20·0	6·00	302 and 340
7	316·0	22·5	7·03	302 and 340

Groth has given data on the machine dimensions and speeds for his models, as shown in Table 2.

The Zippe Centrifuge

The centrifuge described by Zippe[25] shows marked differences in design from that of Groth. The aim was to achieve a lightweight machine with a basic simple design. The essential features are shown in Fig. 19.

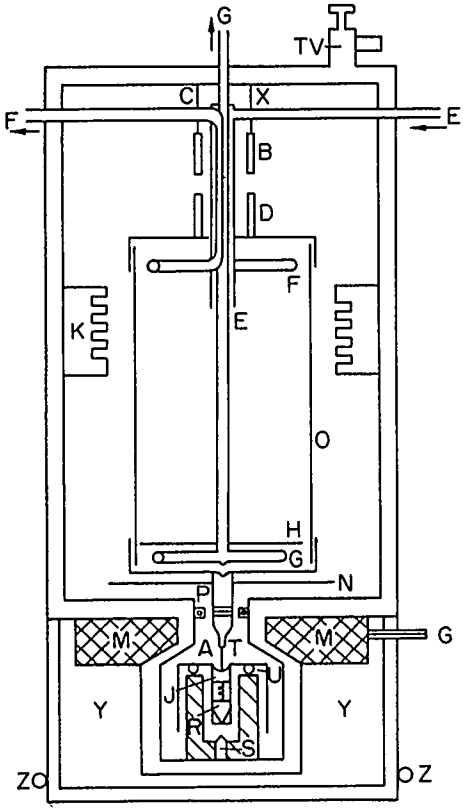

Fig. 19 The Zippe centrifuge.[25]

The centrifuge rotor, *O*, spins in vacuum on a vertical axis

on a thin, flexible steel needle, *A*. The needle rotates in a hard cup, which forms part of the metallic plate, *J*, mounted in a housing, *T*. The housing is permitted to move laterally by rolling on three steel balls, *U*, the motion being damped by the surrounding oil which simultaneously provides the lubrication for the rotating part. The housing, *T*, is centred by the attracting forces of two magnets, *R* and *S*. Damping of axial vibrations is achieved by the elastic support of the plate, *J*, through a spring together with the oil friction.

The upper bearing consists of a hollow permanent magnet, *B*, suspended from three steel wires, *X*, and connected with flexible plastic strips, *C*, which provide damping. The magnet, *B*, is centrally coupled to another magnet, *D*, which forms part of the rotor assembly.

Gas is introduced and extracted through a concentric pipe assembly which passes through the annulii formed by the magnets, *B* and *D*. The feed tube, *E*, ends in the middle part of the rotor, *O*. The other tubes, *G* for light fraction, and *F* for heavy fraction, terminate at opposite ends of the rotor and are fitted with scoops which utilise the high impact pressure in the vicinity of the rotor wall to pump the gas fractions from the rotor. Simultaneously, one of the tubes, *F*, by means of the reduction of the angular velocity of the gas induces the desired countercurrent flow, while the other is shielded by a plate, *H*, so as not to disturb the flow of gas. The gas strikes the stationary scoop, moves inwards radially gaining in pressure relative to the gas in the centre of the centrifuge, and is therefore expelled again into the main gas stream up the centrifuge, so producing the recirculating system.

The small amount of gas that leaks from the interior of the rotor through the small annular gap around the gas conduction arrangements is confined to the region above

the rotor by a spiral groove molecular pump, *K*, in the wall of the vacuum cylinder.

The rotor is driven by an electric motor, *M*, the armature of which is a flat, hardened steel plate, *N*, attached rigidly to the bottom of the rotor. The field winding, *M*, is located outside the vacuum in an oil bath, *Y*, and is fed by an alternator at a frequency synchronous with the speed of the rotor. The entire lower part of the stand, including bearing and motor winding, is cooled by water in the tubes, *Z*.

The original Zippe machine is reported to have been 30–38 cm long and to have had a radius of 3·81 cm.

5. Centrifuge Plant

5.1 CENTRIFUGE CASCADES

The separation factor of a single centrifuge is small compared with the overall separation required in a plant and its throughput is much less than that needed for the plant. On an industrial scale, therefore, a large number of centrifuges are required in order to achieve the production rate, at the required degree of enrichment. In a cascade separating elements are grouped in series and in parallel. The elements operating in parallel on material of the same mole fraction form a "stage". The process is, however, a continuous one in which enriched and depleted fractions from different stages are combined and passed through further stages in series for enrichment or depletion.

As will be seen in the following section, the cascade is best arranged so that there are a large number of individual machines in parallel at the feed point to the cascade, and successively fewer in consecutive stages towards the product and waste ends of the plant (Fig. 20).

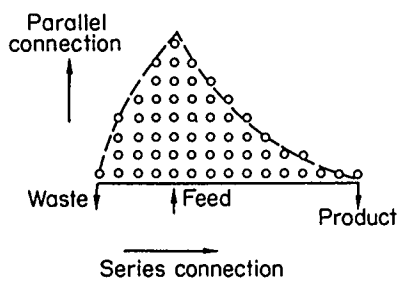

Fig. 20 Centrifuge cascade shaping. (*Avery, D. G. and Kehoe, R. B.*, "*The Uranium Enrichment Industry*", Journal of the British Nuclear Energy Society, (*July 1970*).)

Such a configuration would approximate to an ideal cascade, the properties of which will now be developed.

5.2 IDEAL CASCADES

Fig. 21 shows a single separating element which divides an incoming flow of L moles/sec having enrichment N of the desired isotope, into two streams, one stream of θL moles/sec enriched to a mole fraction N' of the desired isotope, and the other of $(1 - \theta)L$ moles/sec depleted to a mole fraction N''. The proportion θ is known as the "cut" or "splitting ratio" of the element.

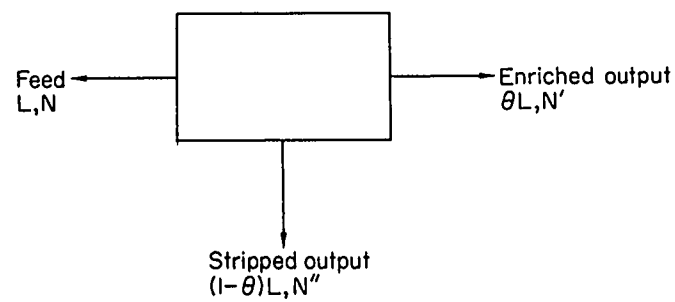

Fig. 21 A simple separating element.

The simple process factor for this element has been defined in Section 2.2 as α where

$$R' = \frac{N'}{1 - N'} = \alpha R = \alpha \frac{N}{1 - N} \qquad (1)$$

Consider now a centrifuge cascade made up of such elements, the size of each stage being graduated by varying the number of machines in parallel. The interstage connections for the cascade are shown in Fig. 22.

The enriched fraction from each element is fed into the next stage above and the depleted fraction to the next stage below. The cascade is fed at a rate F moles/sec with

material of enrichment N_0 and product at enrichment N_p is withdrawn from the cascade continuously at a rate P moles/sec.

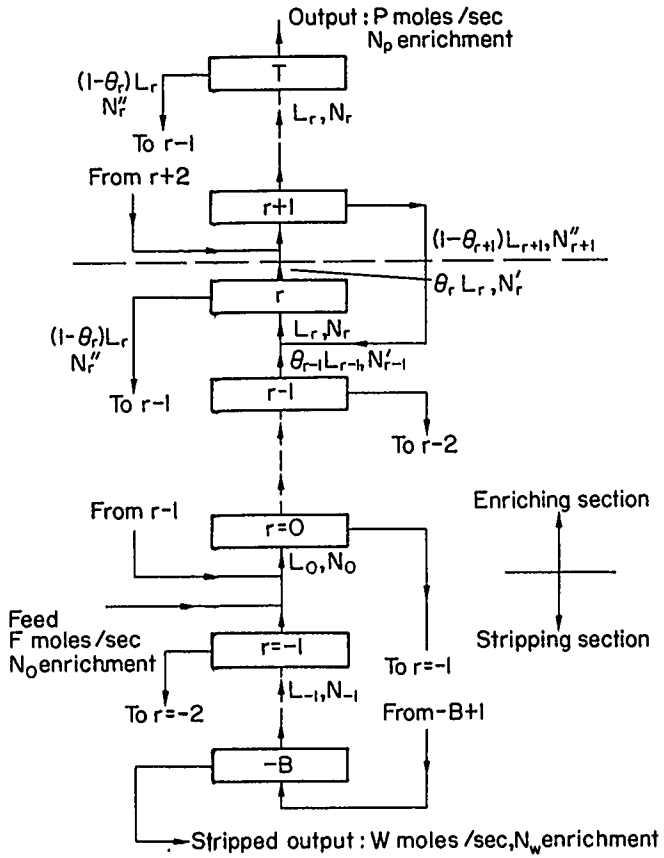

Fig. 22 A cascade. (Holliday, D. and Plesset, M. S., "Elementary Introduction to Isotope Separation", Memorandum RM-4938-PR (June 1966).)

Defining the shape of the optimum cascade means choosing the values of cut θ_r and flow L_r at each stage r in the

cascade.* The optimum cascade in this context is the one which provides a given output flow and enrichment using the least number of elements in the cascade. It is a prerequisite of such an "ideal cascade" arrangement that mixing of materials of different mole fractions must be avoided, so that

$$R'_{r-1} = R_r = R''_{r+1}$$

and

$$N'_{r-1} = N_r = N''_{r+1} \tag{2}$$

$$\text{From (1)} \quad R_r = \alpha R_{r-1} \quad \text{and} \quad R''_r = \frac{1}{\alpha} R_r$$

and introducing the simple process difference $\varepsilon = \alpha - 1$, which (for the purpose of simplification) is here assumed to be small, gives in the limit

$$N_r' - N_r = \varepsilon N_r(1 - N_r)$$

and

$$N_r'' - N_r = -\varepsilon N_r(1 - N_r) \tag{3}$$

For infinitesimally small ε the last two equations can be expressed in differential form

$$\frac{dN}{dr} = \varepsilon N(1 - N) \tag{4}$$

Integration of this equation gives the number of stages required to provide the required degree of separation in the enrichment and stripping sections of the cascade.

Number of enrichment stages =

$$\frac{1}{\varepsilon} \ln \left(\frac{N_P}{1 - N_P} \frac{1 - N_F}{N_F} \right) \tag{5}$$

* The simplified treatment on pages 58–62 follows that given by D. Holliday and M. S. Plesset, "Elementary Introduction to Isotope Separation", Memorandum RM-4938-PR, June 1966.

Number of stripping stages =

$$\frac{1}{\varepsilon}\ln\left(\frac{N_F}{1-N_F}\,\frac{1-N_W}{N_W}\right) \tag{6}$$

In order to achieve expressions for cut and flows in the r-th stage resort must be made to the conservation of matter for the desired isotope, giving

$$N_r = \theta_r N_r' + (1-\theta_r)N_r''$$

$$\theta_r = \frac{N_r - N_r''}{N_r' - N_r''} \tag{7}$$

Using (1) and (2) this becomes

$$\theta_r = \frac{1}{2} + \frac{\varepsilon}{2}(N_r - \tfrac{1}{2})$$

so that the cut of an ideal cascade is very nearly equal to $\frac{1}{2}$. Considering the balance of total material and desired isotope crossing a section (shown dotted in Fig. 22) between the r-th and $(r+1)$th stages

$$\begin{aligned} \theta_r L_r - (1-\theta_{r+1})L_{r+1} &= P \\ \theta_r L_r N_r' - (1-\theta_{r+1})L_{r+1}N_{r+1}'' &= PN_P \end{aligned} \tag{8}$$

which gives for the rectifier

$$L_r = \frac{2P(N_P - N_r)}{\varepsilon N_r(1-N_r)}$$

and for the stripper

$$L_r = \frac{2W(N_r - N_W)}{\varepsilon N_r(1-N_r)} \tag{9}$$

These equations show that the size of the stage decreases away from the feed point, typically for low feed concentrations as in Fig. 23. The numbers of machines in the rth stage of the rectifier and stripper can be obtained by dividing Eqn. (9) by the single machine throughput L moles/sec.

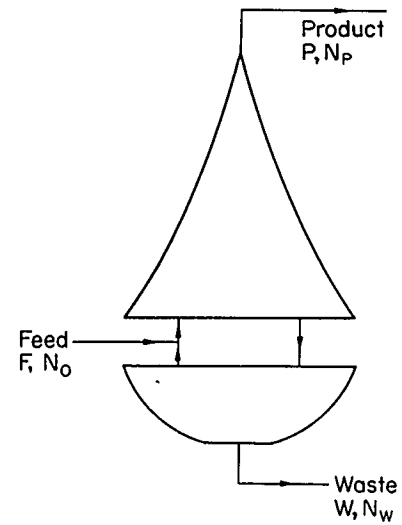

Fig. 23 An ideal cascade showing connections between rectifier and stripper.[17]

The number (not necessarily integral) of machines in the rth stage of the rectifier is

$$n_r = \frac{L_r}{L} = \frac{2}{\varepsilon L}\,\frac{P(N_P - N_r)}{N_r(1-N_r)} \qquad r \geqslant 0 \quad (10a)$$

and for the stripper

$$= \frac{2}{\varepsilon L}\,\frac{W(N_r - N_W)}{N_r(1-N_r)} \qquad r < 0 \quad (10b)$$

Integral members are of course chosen.

Knowing the number of stages in the plant this enables the number of machines required in the plant to be determined by combining (4) and (10) and integrating.

The total number of machines in the cascade is approximately

$$= \frac{PV(N_P) + WV(N_W)}{\frac{1}{2}\varepsilon^2 L}$$

$$= \frac{\Delta U}{\delta U}$$

where $\Delta U = PV(N_P) + WV(N_W)$ is the separative work per unit time required of the cascade and $\delta U = \frac{1}{2}\varepsilon^2 L$ is the separative power of an individual machine in the cascade.

5.3 PRACTICAL CASCADES

An ideal cascade is not completely achievable in practice, because the minimum number of elements to achieve the separation objective is usually non integral in most stages of the cascade. What is therefore usual in a practical cascade is to assemble the cascade in blocks of an integral number of identical machines in parallel, a large number in parallel at the feed point and fewer in successive stages towards product and waste so that the shape of an ideal cascade is closely approximated to. The cost advantage that accrues from the mass production of identical elements can be fully exploited. Supposing that in order to meet a programme of 200–300 tonnes SW p.a., say, 100,000 machines were required. The plant could be something like that in Fig. 24.

In this example the result is shown as one large diamond shaped cascade. It is likely that in practical plant this large cascade would be sub-divided into a number of

smaller cascades, retaining the same shape as the above but scaled down for reasons of operational safety.

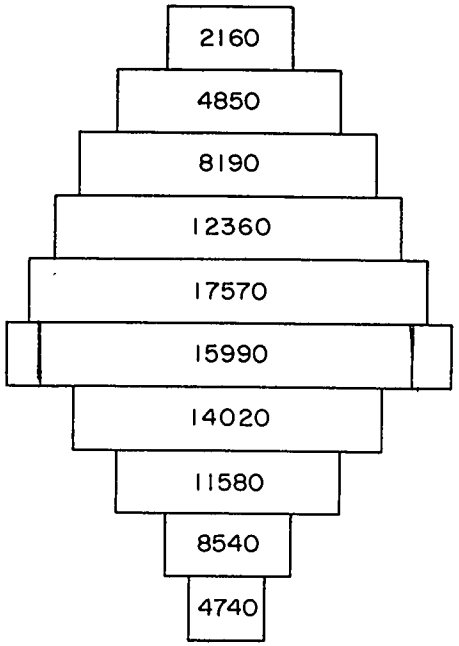

Fig. 24 Centrifuge plant characteristics. This diagram shows the number of stages and the number of centrifuges required in each stage. The plant may be sub-divided:—

No. of centrifuges:	*100,000*
Centrifuge enrichment factor:	*1·25*
Product enrichment:	*2·16%*
Tails enrichment:	*0·19%*

(Geoghegan, G. R. H. and Kehoe, R. B., Paper to Fourth Foratrom Congress, Stockholm, September 1970.)

6. Economics and Future Developments

In the preceding chapters the theory of the gas centrifuge and its behaviour in cascade systems has been outlined, and some account has been given of the major engineering problems involved in translating the process into an industrial context. In this final chapter the economic factors which will affect the extent to which industrial exploitation is successful are discussed and, following from this, the areas for future development which offer the greatest promise for further reducing costs can be set down.

The cost of enriched uranium makes up a significant fraction (about 10 per cent) of the cost of power from today's nuclear reactors. This cost is made up, in roughly equal proportions, of the cost of the natural uranium fed to the separation process and the cost of providing the Separative Work necessary to give the required degree of enrichment as indicated in Chapter 2. Table 3 gives some illustrations of the amount of Separative Work required to produce one tonne of enriched uranium at various enrichments from natural uranium as feed.

Future world demands for Separative Work for projected nuclear power programmes indicate very substantial growth. Typical figures are 25,000 tes SW p.a. in 1980, and twice to four times this quantity by the end of the following decade. At the time of writing the total world supply capability (almost entirely in the US) exceeds demand but this situation will only obtain until about 1980. In the years thereafter several additional enrichment plants, of several thousand tonnes SW each in annual capacity will be needed. Whether or not the centrifuge process will form the basis of these plants will depend upon whether it can be

developed and engineered to the point where reasonable profits can be expected from centrifuge plants selling into a world market at prices which initially at least will be dictated by the price at which Separative Work is sold from the very large US plants.

Table 3

PRODUCT ENRICHMENT % ^{235}U	PLANT WASTE CONCENTRATION % ^{235}U	AMOUNT OF SW REQUIRED tes
1·0	0·2	0·38
3·0	0·2	4·31
5·0	0·2	8·85
1·0	0·3	0·27
3·0	0·3	3·42
5·0	0·3	7·20

Table 4

COST ITEM	% OF TOTAL SW COST
Capital recovery—centrifuge machines	30
centrifuge plant	35
Machine replacements	10
Power consumption	15
Directing operating cost, labour, materials, maintenance, etc.	10

Apart from fiscal considerations such as taxation, ratio of loan to equity capital, the definition in particular circumstances of acceptable profit margins, and depreciation policies which are outside the scope of this book, the industrial success or otherwise of the centrifuge process will

depend upon the costs which make up the total Separative Work cost from the process. Table 4 shows the main components of this cost (for typical current centrifuge and plant designs) and indicates the percentage of the total attributable to each. Succeeding paragraphs will consider each component in turn to indicate where progress is required leading to cost reductions.

CAPITAL COSTS

For a centrifuge of given design, and hence output, the key to low cost lies in a design amenable as far as possible to mass production techniques to reduce unit manufacturing costs. Individual machine outputs can be expected to be very small, of the order of 1–10 kg SW p.a., in relation to total demand. Thus if an expansion programme of, say, 200–300 tonnes SW p.a. capacity each year is considered, then something of the order of 100,000 machines will require to be manufactured and installed per year. If a more ambitious programme is considered, then in a few years some 2–5 million machines would be operational. Costly units designed with ample stress margins to ensure a virtually indefinite life cannot be considered but, as with most other industrial engineering problems, a compromise must be reached.

Unit manufacturing costs are not however the sole problem, the design must be such that machine assembly and installation in a plant at the numbers envisaged can also be undertaken quickly, cheaply and reliably.

Similar considerations apply to the plant itself, the cost of which is the largest single component in the total. From the cost standpoint, the elimination as far as possible of costly items such as valves, instrumentation, sophisticated machine mountings, complex electrical drive or control gear are the areas where substantial benefits can be found. Similarly, it is important to maximise the "packing

fraction" of the machine within a building, to reduce building and support service costs for a plant of given output.

A further design optimisation of major importance is the determination of the optimum number of feed units and product and waste take off units which are required in relation to the unit size of cascades. These units which convert solid UF_6 in transport containers to gaseous UF_6 at plant working pressures, or vice versa, represent a substantial capital investment susceptible to economies of scale. For a large plant the minimum number of product units will be determined by the expected output requirements at differing enrichment levels, but to the extent that connection and disconnection of containers involves some risk of admission of air to the plant it may be judged desirable to limit the amount of plant put at risk from a single operator error or component failure. Similar considerations apply to feed and waste units.

Machine Replacements

In Table 4 a figure of 10 per cent is quoted for machine replacements. This is based on an assumption of a statistical failure distribution pattern similar to most other electro/mechanical devices involving a degree of "infant mortality" followed by a period of very low failure and an eventual rise after a period, in this case assumed as 10 years, to 100 per cent failure. Apart from random failures, due to material or manufacturing defects which have escaped the initial inspection procedures during manufacture, the ultimate life will depend, as noted in Chapter 4, on the relation between working stress and the creep strain of the most highly stressed component. Given adequate data on the relevant material, machine life can thus be regarded as a design variable.

To take the example chosen, if twice the life expectancy were built into the design a 5 per cent improvement in

final product cost would result. But if this could only be achieved by, say, increasing the thickness of the rotor and hence increasing the cost of that component and of the crash protection devices to allow for the greater missile momentum in the event of premature disintegration it is not obvious without a detailed examination in specific circumstances that a net saving would result. Conversely, it may be perfectly acceptable to design for a shorter life expectancy if commensurate cost savings appear elsewhere as a result.

Three other factors are important in considering optimum machine life. The first is essentially a matter of plant and machine design which must be such that any machine failure is an individual event and has no effect on the performances of any other machine in the cascade. When a machine fails, whether it disintegrates at high speed or whether, by bearing failure for example, it is brought to rest relatively slowly within its immediate containment, a considerable amount of energy is dissipated. Precautions must be taken to ensure that the energy can be dissipated without causing an adjacent machine to fail, through shock transmission for example, and hence give rise to a chain reaction of failures throughout the cascade.

The second point interacts with machine design considerations particularly. A proportion (given adequate design, the majority) of failures will not result in machine disintegration. Depending upon the detailed design therefore it will be possible to re-use some parts of a failed machine in manufacturing new machines, with a consequent saving in machine replacement costs.

Finally, a part of the direct operating cost relates to the cost, in terms of labour as opposed to materials, of replacing failed machines in a cascade. The effect of leaving a failed machine in a cascade, assuming as is essential that the vacuum integrity of the cascade is unaffected, is to reduce

the cascade efficiency by a small amount. The choice is thus open to incur additional labour costs in replacing machines as and when they fail to maintain maximum cascade efficiency, or to leave them *in situ* until a sufficient number have failed to bring the efficiency down to a predetermined level and replace a number in one operation. A further alternative for consideration will be a programme of planned maintenance, in which machines are replaced after a given number of years, whether failed or not.

POWER CONSUMPTION

In the example given, power costs account for 15 per cent of the total costs. This assumes a low-loss bearing system and a centrifuge rotating *in vacuo* to remove the effects of atmospheric drag on the outside of the rotor. Clearly, it is important to minimise as far as possible the power required to drive an individual machine although again an optimisation is involved. A significant speed increase, if other design criteria allow it, would justify some increase in power consumption provided the overall cost benefit arising from increased output more than outweighed the increased power costs.

A particular problem may arise if supercritical centrifuges are being considered. The power necessary to accelerate the machines through the resonant "critical" speeds may be greater than that required for steady operation. The drive systems and the associated electrical distribution system must in these circumstances be designed to handle the start-up power and some cost penalty may arise. This leads to the quite general consideration that, since the capital costs of the electrical distribution and switchgear systems may well be a significant fraction of the total capital cost, the degree of sophistication which can be justified in motor design to reduce power consumption may be limited if it in turn leads to requirements for more complex supply systems.

OPERATING COSTS

The direct operating costs for labour and materials in operating a stable running cascade should be minimal. The major items are those associated with operating the feed, product and waste services and with maintaining the cascades to deal with failed machines. Preceding paragraphs have described the factors which impinge on the design and number of service units and on the choice of maintenance philosophy to be adopted.

One feature of centrifuge plants, assuming them to be made up of numbers of virtually separate smaller cascades, which is different from many process plants, is that quite a significant part of the direct operating costs may increase almost linearly with plant size rather than show a reduction in cost per unit output as size increases. Many components of the operating cost will show such a reduction, of course, such as general site overheads, analytical charges, the cost of supervising staff, etc., but in general terms the costs per unit of output associated with the feed, product and waste services and with cascade maintenance can be expected to be more nearly constant as output increases.

FUTURE DEVELOPMENTS

The discussion so far has concentrated upon the factors which affect cost assuming a centrifuge of given design and hence output. It has been noted that within this limitation substantial economies can be achieved by careful attention to plant design and to machine and component manufacturing technology.

Chapter 4 has examined the engineering design considerations for individual centrifuges and has indicated the two major areas where improved rotor materials and/or increasing length to diameter ratio through supercritical operation can be expected to lead to increased machine output. Such increases will of course only lead to a lower cost per unit output from the machine if they are accompanied by less than proportional increases in machine cost. In this connection, it must be borne in mind that if machine output is increased by, say, a factor of three then to meet a given demand programme, only one-third of the number of machines is needed and some of the economies of scale in machine manufacture are automatically lost. Similarly, more advanced materials are likely to be more costly to manufacture and fabricate, and whilst it is very possible that an increase in output and some decrease in cost will result from the adoption of new materials allowing higher speed operation, it is very unlikely that the cost savings will be in direct proportion to the output increase.

It is, of course, true that even if machine output is increased at the expense of a directly proportionate increase in machine cost an overall cost saving could still result since the number of machines required to provide a given plant output is reduced and plant capital cost per unit of output should correspondingly come down. This however will only be true if the design of the machines of higher output is such that the same degree of economy in plant design can still be achieved, as with a possibly more robust but lower output machine. One example of this kind of interaction has already been noted where it has been pointed out that a supercritical high output machine may require significantly more expensive electrical drive and distribution systems.

In considering the various ways in which machine output might be increased, therefore, it is always necessary carefully to consider whether any increase achieved will show a net cost reduction after all the factors determining both machine and plant costs have been assessed. It is already clear that substantial future cost savings will be achieved as the development of centrifuges and centrifuge plant designs progresses but, as with all other engineering projects, the maximum gain achievable will result from the successful optimisation of a very large number of conflicting factors.

Appendix I

THE MAXIMUM SEPARATIVE POWER OF A CENTRIFUGE

The maximum separative power $(\delta U)_{max}$ of a centrifuge has been calculated by Cohen[17] in the following way. Consider two large reservoirs (Fig. 25) containing respectively M moles of material in which the mole fraction is N, and M' of slightly different mole fraction, N', which is greater than N.

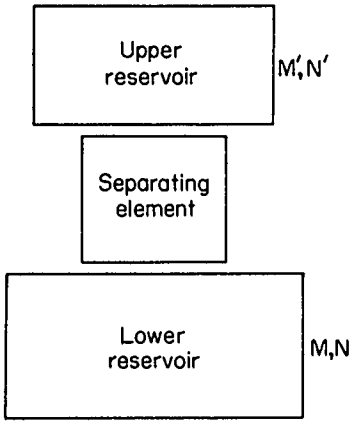

Fig. 25 Separative work of a countercurrent element.[17]

Consider the case of a countercurrent separation element transporting P moles of the isotope mixture containing τ moles of the desired isotope into the upper reservoir, withdrawing the same amount from the lower reservoir. The upper reservoir increases in mole fraction by an amount

$$\frac{N'M' + \tau}{M' + P} - N' = \frac{\tau - N'P}{M' + P}$$

and the lower reservoir decreases by the amount

$$\frac{\tau - PN}{M - P}$$

The resulting separative power of the element is

$$\delta U = \delta[M'.V(N')] + \delta[M.V(N)]$$

$$= (\tau - NP)\left[\frac{\mathrm{d}V(N')}{\mathrm{d}N'} - \frac{\mathrm{d}V(N)}{\mathrm{d}N}\right]$$

$$= (\tau - NP)(N' - N)\frac{\mathrm{d}^2V(N)}{\mathrm{d}N^2}$$

For isotope mixtures the separative power is independent of the concentration and

$$\frac{\mathrm{d}^2V(N)}{\mathrm{d}N^2} = \frac{1}{[N(1-N)]^2}$$

and therefore

$$\delta U = \frac{(\tau - NP)(N' - N)}{N^2(1-N)^2}$$

The quantity τ, the amount of desired isotope moved forward is called the desired material transport. The factor $\tau - NP$ is called the net transport. The net transport of desired material (in moles per sec) across a surface element $\mathrm{d}\sigma$ is:

$$\frac{\mathrm{d}\sigma}{M_1}(\rho_1 u_{c1} - D\nabla\rho_1) = \frac{Dp}{RT}\left[(M_1 - M_2)\frac{\omega^2 a}{RT}\right.$$

$$\left. N(1-N)\vec{a}_0 - \nabla N\right]\mathrm{d}\sigma$$

where $\vec{a}_0$ = unit vector in the direction of a radius through $\mathrm{d}\sigma$

$\vec{u}_{c1}$ = the vector velocity created by the centrifugal field directed along a_0

and ∇ is the vector gradient operator.

The separative power of a thin slab of thickness $\mathrm{d}s$ with surfaces $\mathrm{d}\sigma$ normal to ∇N and sides parallel to ∇N is

$$\mathrm{d}U = \frac{Dp}{RT}\frac{\left[(M_1 - M_2)\frac{\omega^2 a}{RT}N(1-N)\vec{a}_0 - \nabla N\right].\nabla N}{N^2(1-N)^2}\mathrm{d}\sigma\,\mathrm{d}s$$

where the symbol . indicates the scalar product.

Taking ∇N as a variable and $\mathrm{d}\sigma$, $\mathrm{d}s$ and everything else constant the condition for the maximum of $\mathrm{d}U$ is when

$$\nabla N = \tfrac{1}{2}(M_1 - M_2)\frac{\omega^2 aN}{RT}(1-N)\vec{a}_0$$

This means that ∇N has the direction of the centrifugal field and half the equilibrium value.

Then

$$(\mathrm{d}U)_{\max} = \frac{Dp}{RT}\left[\frac{(M_2 - M_1)\omega^2 a}{2RT}\right]\mathrm{d}\sigma\,\mathrm{d}s$$

Integrating over the whole rotor of length Z and radius a_2 yields

$$(\delta U)_{\max} = \int(\delta U)_{\max}$$

$$= \frac{Dp}{RT}\left[\frac{(M_2 - M_1)\omega^2}{2RT}\right]^2\int_0^{a_2} a^2 2\pi a Z\,\mathrm{d}a$$

$$= \frac{Dp}{RT}\left[\frac{(M_2 - M_1)(\omega a_2)^2}{2RT}\right]^2\frac{\pi Z}{2}\ \text{moles/sec}$$

$$= \rho D\left[\frac{(M_2 - M_1)(\omega a_2)^2}{2RT}\right]^2\frac{\pi Z}{2}\ \text{g/s}$$

Appendix II

THE GENERAL PARTIAL DIFFERENTIAL EQUATION FOR A CENTRIFUGE

Following Cohen,[17] consider a centrifuge containing a single pure gas, which rotates with the same speed as the rotor, with angular velocity ω radians per second, isothermally and without other motions. A pressure gradient is established under the influence of the centrifugal force $\omega^2 a$ per unit mass. Under the influence of this force, a pressure gradient is established according to the hydrodynamic equation

$$\frac{1}{\rho}\frac{\partial p}{\partial a} = \omega^2 a \tag{1}$$

where ρ is the density of the gas mixture (g/cm^3). The quantities p and ρ are related by the gas flow.

$$p = \frac{RT}{M}\rho \tag{2}$$

and these two equations combined give

$$\rho(a) = \rho(0)\exp\left(\frac{M\omega^2 a^2}{2RT}\right) \tag{3}$$

This density distribution is a dynamic equilibrium between the effect of random motion of the molecules (diffusion), which tends to erase density gradients, and the effect of the centrifugal field, which tries to establish the barometric distribution with an increased population of molecules at the periphery. The diffusion counter to the

density gradient gives a current density (in g/sec cm^2) inward of

$$-D\frac{\partial \rho}{\partial a} = -D\rho\frac{M\omega^2 a}{RT} \tag{4}$$

where D is the coefficient of self-diffusion. The outward current per square centimetre caused by the centrifugal force, which balances this inward current, must therefore be

$$\rho u_c = +D\rho\frac{M\omega^2 a}{RT} \tag{5}$$

In mixtures, this equation holds for each component separately

$$\rho_i u_{ci} = D_i\rho_i\frac{M_i\omega^2 a}{RT} \tag{6}$$

where D_i is the diffusion coefficient for molecules of type i through the whole mixture. For isotopic mixtures the exact meaning of the diffusion coefficient is of no significance, and henceforth the subscript will be dropped.

Consider a centrifuge containing a perfect binary gas mixture, isothermal and rotating uniformly. In order to accomplish separation, the gas is made to flow radially and axially. In terms of the cylindrical co-ordinate system chosen, the motion of the gas as a whole (drift velocity) is given by the components.

$$\begin{array}{ll} \text{Radial} & u = u(a, z) \\ \text{Azimuthal} & v = 0 \\ \text{Axial} & w = w(a, z) \end{array} \tag{7}$$

This gas motion continually disturbs the equilibrium distribution. The system moves material in an effort to re-

establish equilibrium; in this way a transport of the desired material is set up.

Imagine a small annular region in the rotor, bounded by the cylinders $a = a_0$ and $a = a_0 + \delta a$ and by the planes $z = z_0$ and $z = z_0 + \delta z$. In a short time interval δt there flows across the cylindrical face $a = a_0$ an amount of desired isotope (denoted by the subscript 1).

$$g_1(a_0) = \left(\rho_1 u + \rho_1 u_{c1} - D\frac{\partial \rho_1}{\partial a}\right)2\pi a_0 \delta z \delta t \tag{8}$$

In this equation $\rho_1 u$ is the flow caused by the drift velocity, $\rho_1 u_{c1}$ is the flow impressed by the centrifugal field, $-D\partial\rho_1/\partial a$ is the contribution from diffusion against the density gradient, and $2\pi a_0 \delta z$ is the area of the cylindrical face. Likewise the flow across the plane face $z = z_0$ is

$$g_1'(z_0) = \left(\rho_1 w - D\frac{\partial \rho_1}{\partial z}\right)2\pi a.\,\delta a \delta t \tag{9}$$

The change in content of desired material in the volume element is therefore

$$\begin{aligned} \frac{\partial \rho_1}{\partial t}2\pi a_0 \delta a \delta z \delta t &= g_1(a_0) - g_1(a_0 + \delta a) - g_1'(z_0) \\ &\quad - g_1'(z_0 + \delta z) \\ &= -\frac{\partial g_1}{\partial a}\delta a - \frac{\partial g_1'}{\partial z}\delta z \end{aligned} \tag{10}$$

Using (7), (8), (9) and (10) gives

$$\begin{aligned} \frac{\partial \rho_1}{\partial t} &= -\frac{1}{a}\frac{\delta}{\delta a}a\left(D\rho_1\frac{M_1\omega^2 a}{RT} - D\frac{\partial \rho_1}{\partial a} + \rho_1 u\right) \\ &\quad - \frac{\partial(\rho_1 w)}{\partial z} + D\frac{\partial^2 \rho_1}{\partial z^2} \end{aligned} \tag{11}$$

Now,

$$\rho_1 = \frac{M_1}{RT} p_1 = \frac{M_1}{RT} Np \qquad (12)$$

where p is the total pressure, p_1 the partial pressure and N the mole fraction of one particular isotope.

Also,

$$\frac{\partial p}{\partial a} = \omega^2 a(\rho_1 + \rho_2) = \frac{\omega^2 a}{RT} p\,[M_1 N + M_2(1 - N)] \qquad (13)$$

Substituting (12) into (11) and using (13) and noting that Dp = constant, it follows that

$$p\frac{\partial N}{\partial t} = \frac{Dp}{a}\frac{\partial}{\partial a}\left[a\frac{\partial N}{\partial a} + \frac{(M_2 - M_1)\omega^2 a^2}{2RT} N(1 - N)\right] - \frac{1}{a}\frac{\partial}{\partial a}(Npau) - \frac{\partial}{\partial z}(Npw) + D\frac{\partial^2}{\partial z^2}(Np) \qquad (14)$$

This is the partial differential equation of centrifugal separation.

Appendix III

THE PARTIAL DIFFERENTIAL EQUATION OF THE COUNTERCURRENT CENTRIFUGE

The generalised partial differential equation given earlier, becomes, for the case of the countercurrent centrifuge:—

$$p\frac{\partial N}{\partial t} = \frac{Dp}{a}\frac{\partial}{\partial a}\left[a\frac{\partial N}{\partial a} + \frac{(M_2 - M_1)\omega^2 a^2}{RT} N(1 - N)\right] - pw(a)\frac{\partial N}{\partial z} + Dp\frac{\partial^2 N}{\partial z^2}$$

The method of solution given by Cohen[17] depends on the fact that $\frac{\partial N}{\partial a}$ is small, and of the order $\frac{(M_2 - M_1)\omega^2 a}{RT} N(1 - N)$ and so the variation of N with respect to a, as compared with the variation of a, p, or pw may be neglected. For example

$$\int \frac{\partial N}{\partial z} pw\, a\, \mathrm{d}a \rightarrow \frac{\partial N}{\partial z}\int pw\, a\, \mathrm{d}a + \text{terms of order } \left[\frac{(M_2 - M_1)\omega^2}{2RT}\right]^2$$

The first integration of the partial differential equation for the cascade with respect to the radius then gives

$$\frac{\partial N}{\partial a} = -\left(\frac{M_2 - M_1}{RT}\right)\omega^2 a N(1 - N) + \frac{1}{a}\frac{\partial N}{\partial z}\int_0^a \frac{pw}{Dp}\, a\, \mathrm{d}a$$

The integration constant (a function of z and t) was evaluated by remembering that $a\left(\frac{\partial N}{\partial a}\right) \rightarrow 0$ as $a \rightarrow 0$.

The second integration requires solution of integration constants. The boundary conditions are $2\pi \int_0^{a_2} \frac{pw}{RT} a \, da = P$ where P is the total mass flow flowing through the centrifuge in the axial direction, and

$$2\pi \frac{\partial}{\partial z} \int_0^{a_2} \left(\frac{pNw}{RT} - \frac{Dp}{RT} \frac{\partial N}{\partial z} \right) a \, da = -2\pi \int_0^{a_2} \frac{p}{RT} \frac{\partial N}{\partial t} a \, da$$

which gives the isotope mass balance of a cross sectional slab with respect to z and t.

This latter equation may be integrated by parts giving

$$2\pi \frac{\partial}{\partial z} \left(N(a_2, z) \int_0^{a_2} \frac{pw}{RT} a \, da - \int_0^{a_2} \frac{\partial N}{\partial a} da \int_0^{a} \frac{pw}{RT} a \, da \right)$$

$$= 2\pi \frac{\partial}{\partial z} \int_0^{a_2} \frac{Dp}{RT} \frac{\partial N}{\partial z} a \, da - 2\pi \int_0^{a_2} \frac{p}{RT} \frac{\partial N}{\partial t} a \, da$$

This does not provide the integration constant that permits the integration of $\frac{\partial N}{\partial a}$, but does permit the integration of

$$\frac{\partial N}{\partial a} \int_0^{a_2} pw \, a \, da.$$

Combining this last equation with the partial differential equation for the cascade gives

$$C_6 \frac{\partial N}{\partial t} = C_5 \frac{\partial^2 N}{\partial z^2} - \frac{\partial}{\partial z} [PN + C_1 N(1 - N)]$$

where

$$C_1 = \frac{2\pi}{RT} \frac{(M_2 - M_1)}{RT} \omega^2 \int_0^{a_2} a \, da \int_0^{a} pw \, a \, da$$

$$C_2 = \frac{2\pi}{RT} Dp \frac{a_2^2}{2}$$

$$C_3 = \frac{2\pi}{RT} \frac{1}{Dp} \int_0^{a_2} \frac{da}{a} \left(\int_0^{a} pw \, a \, da \right)^2$$

$$C_5 = C_2 + C_3$$

$$C_6 = \frac{2\pi}{RT} \int_0^{a_2} pa \, da = \text{hold up per unit length (moles/cm).}$$

The equation is typical for isotope separation in a square cascade or column.

The coefficients given above will vary as a result of changes in operating conditions. Consider the use of a single centrifuge. If $N \ll 1$ the steady state solution of the above equation is—

$$\frac{N(Z)}{N(O)} = \frac{(1 + \psi) \exp [2\varepsilon Z(1 + \psi)]}{1 + \psi \exp [2\varepsilon Z(1 + \psi)]}$$

where

$$\psi = \frac{P}{C_1} = \frac{PRT}{2\pi(M_2 - M_1) \frac{\omega^2}{RT} \int_0^{a_2} a \, da \int_0^{a} pw \, a \, da}$$

$$2\varepsilon = \frac{C_1}{C_5} = \frac{(M_2 - M_1) \frac{\omega^2}{RT} \int_0^{a_2} a \, da \int_0^{a} pw \, a \, da}{Dp \frac{a_2^2}{2} + \frac{1}{Dp} \int_0^{a_2} \frac{da}{a} \left(\int_0^{a} pw \, a \, da \right)^2}$$

The quantities C_1 and C_5 depend in two ways on the function pw, which measures the up-and-down flow; firstly on the flow pattern or profile and secondly on the absolute magnitude of the flow. The profile is determined by internal

arrangements in the rotor, whilst the magnitude of the flow is an operating variable and can be adjusted from outside. It is convenient to introduce a new quantity:—

$$S = \frac{2\pi}{RT}\int_0^{a_2} |pw|\, a\, da$$

which is the sum of upward and downward flow.

Then $\int_0^a \frac{pw\, a\, da}{S}$ does not depend on S

so that $\psi = \frac{P}{a_1 S}$

$$2\varepsilon = \frac{a_1 S}{C_2 + a_3 S^2}$$

where $a_1 = \frac{C_1}{S}$ and $a_3 = \frac{C_3}{S^2}$ do not vary with S

$\frac{N(Z)}{N(0)}$ is now a function of S and ψ. For any value of S, $\frac{N(Z)}{N(0)}$ is greatest when the rate of production is zero. Then

$$\frac{N(Z)}{N(0)} = \exp\left(\frac{a_1 S}{C_2 + a_3 S^2} Z\right)$$

and the maximum possible value of N_Z/N_0 for a given length of centrifuge and for a given type of countercurrent flow is

$$\frac{N(Z)}{N(0)} = \exp\,(2\varepsilon_0 Z)$$

where $2\varepsilon_0$ is the maximum of $\frac{a_1 S}{C_2 + a_3 S^2}$ with respect to S

and is

$$2\varepsilon_0 = \frac{a_1}{2\sqrt{C_2 a_3}} = \frac{(M_2 - M_1)\frac{\omega^2}{RT}\int_0^{a_2} a\, da \int_0^a pw\, a\, da}{a_2\sqrt{2\int_0^{a_2}\frac{da}{a}\left(\int_0^a pw\, a\, da\right)^2}}$$

The corresponding value of S is

$$S_0 = \sqrt{\frac{C_2}{a_3}} = \frac{2\pi a_2\left(\frac{Dp}{RT}\right)\int_0^{a_2}|pw|\, a\, da}{\sqrt{2\int_0^{a_2}\frac{da}{a}\left(\int_0^a pw\, a\, da\right)^2}}$$

The existence of a maximum in ε is physically due to the phenomenon of back diffusion. The concentration gradient is proportional to ε. When S, the total flow in the centrifuge is large and the concentration gradient is small, back diffusion is negligible ($c_2 \ll a_3 S^2$) and ε varies inversely as S. But when S is small and ε and the concentration gradients are large, the obtainable fractionation is limited by the back diffusion.

It is convenient to measure all flows in terms of S_0.

$$m = S/S_0$$

i.e. the ratio of the rate at which gas flows upwards in a centrifuge to the quantity S_0 which depends on the geometry of the bowl, the physical properties of the gas and the flow pattern.

Substituting for ε

$$\frac{N(z)}{N(0)} = \frac{(1+\psi)\exp\left[2S_0 Z\frac{2m}{1+m^2}(1+\psi)\right]}{1+\psi\exp\left[2\varepsilon_0 Z\frac{2m}{1+m^2}(1+\psi)\right]}$$

Expressing P in terms of the dimensionless parameters m and ψ, where

$$P = m\psi P_0$$

$$P_0 = 4\pi\varepsilon_0 a_0^2 \frac{Dp}{RT}$$

where ε_0, S_0 and P_0 are determined by the flow profile, S and P are determined by the experimental conditions imposed. Then m and ψ are known and the enrichment can be calculated.

The maximum separation factor occurs at $S = S_0$ but this is clearly not the most efficient circulation rate from the point of view of separative power, since axial back diffusion is important at this flow. The relative importance of back diffusion is reduced by increasing S (thus decreasing the concentration gradient). This is shown by the equation for δU

$$\delta U = \frac{C_1^2}{4C_5} Z = \frac{a_1^2 S^2 Z}{4(C_2 + a_3 S^2)} = \frac{a_1{}^2}{4a_3} Z\left(\frac{m^2}{1+m^2}\right)$$

$$= \frac{C_1{}^2}{4C_3} Z\left(\frac{m^2}{1+m^2}\right)$$

The largest value of δU is reached asymptotically as $m \to \infty$. The limiting value of δU is reached rapidly. Where $m = 3$ the separative power is 90 per cent, and when $m = 5$ it is 95 per cent of $\frac{C^2}{4C_3} Z$. At these values of m the concentration gradient which is proportional to $\frac{2m}{1+m^2}$ is 60 and 38 per cent respectively of the maximum.

High values of δU are therefore possible without increasing the flow inordinately and without losing the inherent advantage of the countercurrent centrifuge, i.e. large separation in one unit.

Appendix IV

FLOW PROFILES

IDEAL FLOW PROFILE

In an ideal flow profile the velocity of the gas in the stream varies with radial position in such a way that the axial mass flux is constant, i.e. the mass flow per unit area ρw is a constant for all radii and so $w \propto \frac{1}{\rho}$. Now the gas density ρ increased exponentially with radius for a centrifuge, and the ideal velocity obeys a relationship of the inverse form.

The gas velocity at the centre for speeds of operation of 400 m/s is about 10^5 times larger than that near the periphery. This large axial velocity at the centre makes it impossible to achieve the ideal profile. However, the flow efficiency is easily determined since if ρw is constant so is pw. The integrals C_1 and C_3 become

$$C_1 = \frac{2\pi}{RT}\frac{(M_1 - M_2)\omega^2}{RT}(pw)\frac{a^4}{8}$$

$$C_3 = \frac{2\pi}{RT}\frac{1}{Dp}(pw)^2\frac{a^4}{16}$$

$$\text{so that } \partial u \text{ ideal} = \frac{pD}{RT}\left(\frac{(M_1 - M_2)\omega^2 a^2}{2RT}\right)^2 \frac{\pi Z}{2} \text{ moles/sec}$$

$$= \rho D\left(\frac{(M_1 - M_2)\omega^2 a^2}{2RT}\right)\frac{\pi Z}{2} = \frac{C_1^2}{4C_3} Z \text{ g/s}$$

This is precisely the same as quoted in Sec. 3.3 and means that $E_c = 1{\cdot}0$. The internal circulation for zero throughput is given by

$$S_0 = \frac{2\pi a \dfrac{Dp}{RT} \displaystyle\int_0^a pw\, a\, \mathrm{d}a}{\sqrt{2} \displaystyle\int_0^a \frac{\mathrm{d}a}{a} \left(\int_0^a pw\, a\, \mathrm{d}a \right)^2}$$

which becomes

$$S_{0(\text{ideal})} = \frac{2\pi a \dfrac{Dp}{RT} (pw) \dfrac{a^2}{2}}{\sqrt{\left[2(pw)^2 \dfrac{a^4}{16}\right]}} = 2\sqrt{2}\pi\rho D a \text{ g/s}$$

and the separation factor is given by

$$\alpha - 1 = \tfrac{1}{2} \frac{(M_1 - M_2) V^2}{2RT}$$

As has been pointed out the ideal steep velocity profile cannot be achieved in practice. However countercurrent flow at different velocity profiles can be induced by introducing some asymmetry at the ends of the rotor. Two ways of achieving this are

(a) by confirming the return flow into a narrow annulus giving rise to a "2 shell profile",

(b) by making one end cap hotter than the gas and the other colder hence giving a thermal profile.

TWO SHELL PROFILE

In the two shell profile the outer stream is still a thin layer at the periphery and the inner stream instead of being spread out across the rest of the cross-section is arranged to be another thin layer at an intermediate radius a_1. The integrals become

$$C_1 = \frac{2\pi}{RT} \frac{(M_1 - M_2)\omega^2}{RT} S \frac{(a^2 - a_1^2)}{2}$$

$$C_3 = \frac{2\pi}{RT} \frac{1}{Dp} S^2 \log \frac{a}{a_1}$$

where S is the magnitude of the mass flow at radius a_1. So that

$$\partial U = \frac{pD}{RT} \left\{ \frac{(M_1 - M_2)\omega^2 a^2}{2RT} \right\} \frac{\pi Z}{2} \left[\frac{\left(1 - \left(\frac{a_1}{a}\right)^2\right)^2}{\ln\left(\frac{a}{a_1}\right)} \right]$$

$$= \partial U_{\text{ideal}} \left[\frac{\left(1 - \left(\frac{a_1}{a}\right)^2\right)^2}{\ln\left(\frac{a}{a_1}\right)} \right]$$

This expression is a maximum with respect to $\frac{a_1}{a}$ when this ratio is 0·534, this therefore being the optimum position for the 2 shell radius. The profile efficiency is then

$$E_F = \left[\left(1 - \left(\frac{a_1}{a}\right)^2\right)^2 \Big/ \ln\left(\frac{a}{a_1}\right) \right] = 0{\cdot}814$$

The internal circulation at zero throughput is given by

$$S_0 = \left| \frac{2}{\ln\left(\frac{a}{a_1}\right)} \right|^{\frac{1}{2}} \pi a \rho D$$

and the separation factor

$$\alpha - 1 = \left[1 - \left(\frac{a_1}{a}\right)^2 \right] \frac{(M_1 - M_2) V^2}{2RT}$$

The simple velocity profiles do not indicate direct dependence of profile efficiency on speed of rotation. A dependence

would be expected if it is argued that at high speeds the gas is crowded to the periphery of the rotor thus reducing the effective distance between the countercurrent streams. For the two shell system it is clear that as the position of the inner stream approaches the periphery there is a reduction in profile efficiency. Velocity dependence is clearly demonstrated for the next profile to be considered.

THERMAL PROFILE

A velocity distribution which resembles the ideal one, but with a much less steep velocity gradient, is created in the gas flow if one end of the rotor is maintained above the mean gas temperature and the other below. This was first suggested by Martin[26] who carried out the analysis.

The separative power of a small annular ring in the centrifuge is a maximum when

$$\frac{\partial N}{\partial a} = -\frac{(M_1 - M_2)\omega^2 a}{2RT} N(1 - N)$$

that is one half of the equilibrium value.

The concentration in a countercurrent centrifuge is given by

$$\frac{\partial N}{\partial a} = -\frac{(M_1 - M_2)\omega^2 a}{RT} N(1 - N) + \frac{1}{2}\frac{RT}{Dp}\frac{\partial N}{\partial z}\frac{1}{a}\int_0^a \frac{pw}{RT} 2\pi a \, da$$

where w is the linear velocity in the axial direction. For optimal separative power these two have to be identical and the flow pattern has to be designed so that

$$\int_0^a \frac{pw}{RT} 2\pi a \, da \sim a^2$$

For a thermal profile

$$\int_0^a \frac{pw}{RT} 2\pi a \, da \sim \sqrt{a} \exp \frac{M\omega^2 a^2}{4RT}$$

The separative power for the Martin thermal profile is given by[27]

$$\delta U = \frac{pD}{RT}\left[\frac{(M_1 - M_2)\omega^2}{RT}\int_0^{a_2} a^{\frac{3}{2}} \exp\left(\frac{M\omega^2 a^2}{4RT}\right) da\right]^2 \pi \frac{Z}{2} \Big/ \int_0^a \exp\left(\frac{M\omega^2 a^2}{2RT}\right) da$$

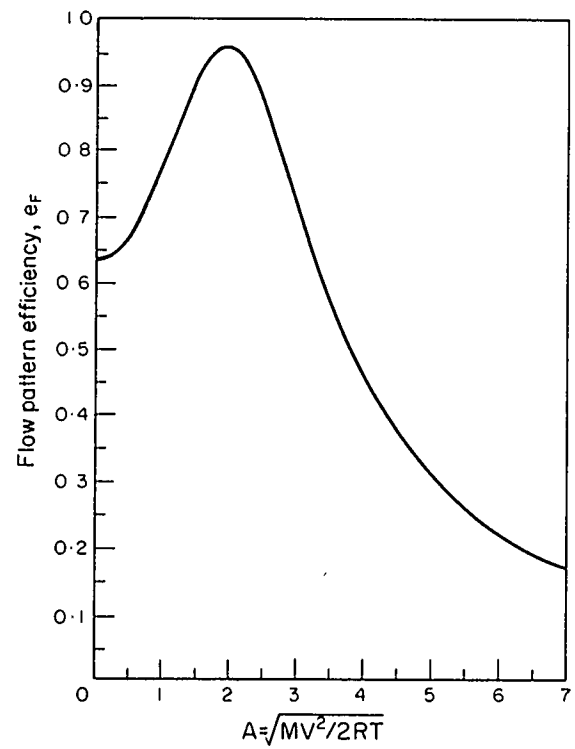

Fig. 26 The dependence of the flow pattern efficiency on the dimensionless parameter, A, *for the Martin profile.*[24]

The profile efficiency is strongly velocity dependent. In Fig. 26 the efficiency is shown as a function of a dimensionless parameter $A \left(= \frac{\sqrt{MV^2}}{2RT}\right)$. The maximum profile efficiency attainable is 0·956.

REFERENCES

1. F. A. Lindemann and F. W. Aston, "The possibility of separating isotopes", *Philosophical Magazine*, **37**, 221 (May 1919), pp. 523–534.
2. H. D. Smyth, "A general account of the development of methods of using atomic energy for military purposes under the auspices of the United States Government 1940–1945", HMSO (1945).
3. K. Clusius and G. Dickel, *Z. physik. Chem.*, B44: 397, 451, 1939.
4. Ph. H. Abelson and J. I. Hoover, Proceedings of the International Symposium on Isotope Separation, Amsterdam, April 1957, North Holland Publishing Company. Chapter 38—"Separation of Uranium Isotopes by Liquid Thermal Diffusion".
5. E. W. Becker, W. Bier and R. Schutte, "Problems concerning the separation of uranium isotopes", CNEN Nuclear Symposium (publ. CNEN), p. 211.
6. E. W. Becker, G. Frey, R. Schutte and D. Siedel, *ibid*, p. 225.
7. G. Bredig, "The influence of centrifugal force on chemical systems", *Zeitschrift fur Physikalische Chemie*, **17**, 1895, 459–472.
8. J. W. Beams, *Journal of Applied Physics*, **8** (December 1937).
9. J. W. Beams and F. W. Linke, *Review of Scientific Instruments*, **8** (May 1937).
10. J. W. Beams, F. W. Linke and C. Skarstrom, *Science*, **86** (September 1937).
11. J. W. Beams, *Rev. Mod. Phys.*, **10**, 245 (1938).
12. J. W. Beams, *Review of Scientific Instruments*, **9** (December 1938).
13. J. W. Beams and L. B. Snoddy, *Phys. Rev.*, **53** (1938).
14. J. W. Beams and C. Skarstrom, *Phys. Rev.*, **56** (August 1939).
15. J. W. Beams and S. A. Black, *Rev. of Scientific Instruments*, **10** (February 1939).
16. R. S. Mulliken, *Amer. Chem. Soc. Journal*, **44** (1922).
17. K. Cohen, "The theory of isotope separation as applied to the large scale production of ^{235}U", McGraw-Hill Book Company, Inc. (1951).

18. P. Harteck and H. Jensen, *Unveroffentlichter Bericht* (1942).
19. J. W. Beams, A. C. Hagg and E. V. Murphree, TID-5230 (1951) (declassified 1959), National Nuclear Energy Series, division 10, volume 1.
20. W. Groth, E. Nann and K. H. Welge, *Zeitschrift fur Naturforschung*, **12A** (January 1957).
21. W. Groth, H. Ihle, A. Murrenhoff, E. Nann and K. H. Welge, Proceedings of the International Symposium on Isotope Separation, Amsterdam, April 1957, pp. 667–694.
22. W. Groth, *Nukleonik*, **1**, 2 (July 1958), pp. 68–73.
23. W. E. Groth, K. Beyerle, E. Nann and K. H. Welge, Proceedings of the 2nd United Nations Conference on the Peaceful uses of Atomic Energy, Geneva, September 1958, volume 4, pp. 439–446.
24. R. E. Kirk and D. F. Othmer, Encyclopedia of Chemical Technology, Volume 7, Interscience (1965), "The gas centrifuge method", by Shacter, J., VonHalle, E. and Hoglund, R. L., pp. 149–165.
25. G. Zippe, "The Development of short bowl centrifuges", Final Report ORO-315, (June 15, 1960). Contract AT(40-1)-2400 (EP-4420-101-60 U). OTS (June 15, 1960).
26. H. Martin, *Z.f. Elektrochemie und angewandte phys. Chem.*, **54** (1950), 120–129.
27. J. Los and J. Kistemeker, Proceedings of the International Symposium on Isotope Separation, Amsterdam, April 1957, North Holland Publishing Company. Chapter 63, "On the influence of temperature distributions inside a gas centrifuge".

GENERAL BIBLIOGRAPHY

Benedict, M. and Pigford, T. H., "Nuclear Chemical Engineering", McGraw-Hill (1957), pp. 378–522 (passim).

Cohen, K., "The theory of isotope separation as applied to the large scale production of ^{235}U", McGraw-Hill (1951), (National Nuclear Energy Series), pp. 103–125, "Centrifuges".

Kirk, R. E. and Othmer, D. F., Encyclopedia of Chemical Technology, Interscience (1963), Volume 4 (1964), pp. 755–756, "Gas Centrifugal Separation" by J. W. Beams. Volume 7 (1965), pp. 149–165, "The gas centrifuge method" by J. Shacter, E. von Halle and R. L. Hoglund.

London, H. (editor), "Separation of Isotopes", Newnes (1961), pp. 249–292, "Gas centrifuges" by W. Groth.

Pratt, H. R. C., "Countercurrent separation processes", Elsevier (1967), pp. 333–347, "The Gas Centrifuge".

AUTHOR INDEX

Aston 10
Aston and Lindemann 10
Avery 22, 56

Beams 21, 33, 49
Becker 16
Bredig 21

Clusius and Dickel 13
Cohen 25, 27, 30, 35, 73, 77, 81

Geoghegan 24, 63
Graham 14
Gröth 33, 47, 49–52

Harteck 32
Holliday and Plessett 58, 59

Kehoe 56, 63

London 49

Martin 90, 91
Mulliken 21
Murphree 30

Soddy 10

Zippe 47, 53–55

SUBJECT INDEX

Bearings 45–46, 47–48
Bromine isotopes, centrifuge separation 21

Capital costs 66–67
Cascades, shape 56
  ideal 57
  practical 62–63
  theory 57–62
Centrifuge, pseudo-gravitational forces 15
Chemical Exchange 12
Chlorine isotopes, centrifuge separation 21
Concurrent centrifuge, general 28–30
  disadvantages 31
Countercurrent centrifuge, general 33
  partial differential equation 34–36, 81–86
  principle 34
  separative power 37–38

Distillation 12

Economics 64 et seq
Efficiency, separation 38
  circulation 38
  non-ideality 39
  profile 40
  turbulence and end effects 40
Electrolysis 12
Electromagnetic separation 11
Entropy of mixing 18
Evaporative centrifuge 21

Flow profile, ideal 40, 87–88
  thermal 42, 90–92
  two shell 41, 88–90
Future developments 70–71

Gas centrifuge, evaporative 21
  concurrent 27–31
  countercurrent 21–22, 33–38
  description of Gröth 49–53
  description of Zippe 53–55
Gaseous diffusion 14–15

Life, components and machine 48, 67–69

Machine, mounting 48
  replacements 67–69

Manhattan Project 7, 10, 13, 15
Multiplication of the simple process difference, oscillation centrifuge 32
  countercurrent centrifuge 33 et seq

Oak Ridge 14
Operating costs 65, 68, 70

Partial differential equation, general for centrifuge 26–28, 77–80
  concurrent centrifuge 27
  countercurrent centrifuge 28, 81–86
  evaporative centrifuge 27
Peripheral speed 25, 26
Power consumption 69
Pressure distribution in a centrifuge 24–25

Rotor, material 43–44, 70–71
  length 45–46
  stresses 43–44
  supercritical 45–46, 71
  thickness 46–47

Separating column, thermal diffusion 13–14
Separation, nozzle 16
  potential 19
  process difference 17
  process factor 17
Separative power, definition 17–18
  dependence on density of maximum 26
  dependence on length of maximum 25–26
  dependence on peripheral speed of maximum 26
  dependence on temperature of maximum 25
  maximum 25, 73–75
Separative work 19

Thermal diffusion 13

Uranium hexafluoride, properties of 14

Vacuum casing 48
Value 19