LWA.900810.0008
ORNL-3572
[1964]

LWA.900810.0008
LWA.900810.0008
599

ORNL-3572

2852

Contract No. W-7405-eng-26

THE HIGH-FLUX ISOTOPE REACTOR

A Functional Description

Volume 1

Illustrations

Edited by
F. T. Binford
C. N. Cromer

OAK RIDGE NATIONAL LABORATORY
Oak Ridge, Tennessee
Operated by
UNION CARBIDE CORPORATION
for the
U.S. ATOMIC ENERGY COMMISSION

The High-Flux Isotope Reactor: a functional description. Volume 1 - Illustrations

UNCLASSIFIED
ORNL-DWG 63-6034

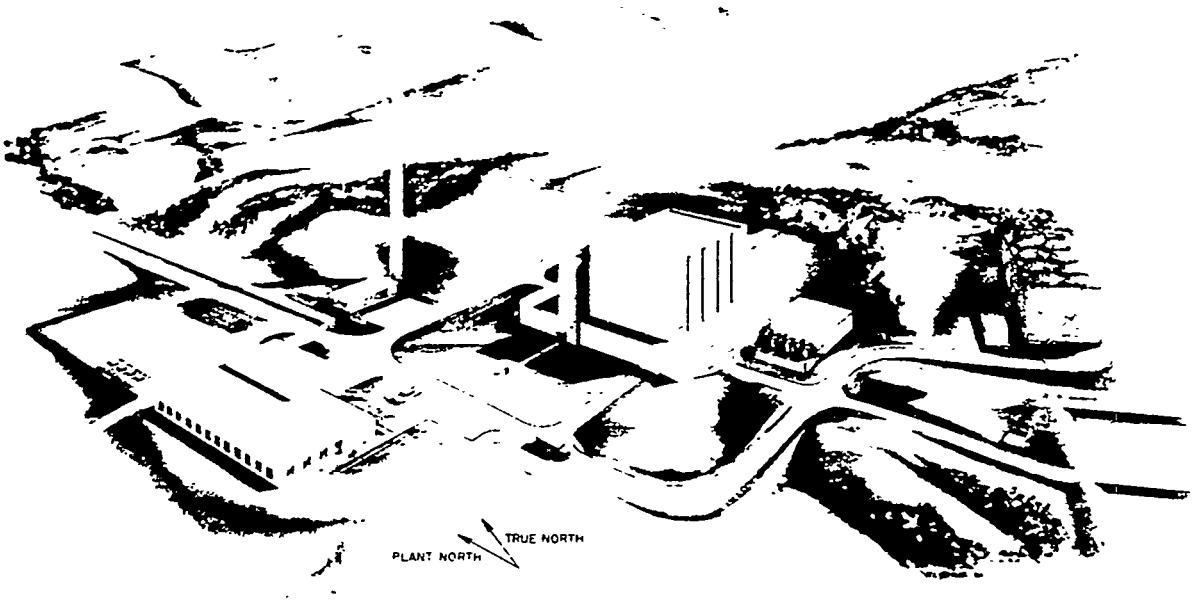

View of the HFIR Site from Melton Hill

FIGURE LIST

Figure No.	Title
0.0.1	Drawing Symbols
0.0.2	Abbreviations and Commonly Used Letter Symbols for Instrument Identification
1.2.1	Isometric Cutaway of Reactor Building
1.2.2	Illustration of Core
2.1.1(*a*)	Road Map, Including Area Within 100 Miles of Site
2.1.1(*b*)	Towns Within a 30-Mile Radius of Site.
2.1.2	Twenty-Mile-Radius Circle of Site on Large-Scale Contour Map
2.1.3(*a*)	Regional Map
2.1.3(*b*)	Locality Map
2.1.4	Contour Map of ORNL and Melton Valley Area
2.1.5	Site Plan
2.3.1	Seasonal Vertical Temperature Gradient Frequency
2.3.2	Annual Frequency Distribution of Winds in the Vicinity of ORNL
2.3.3	ORNL Area Seasonal Wind Roses – Lapse Conditions
2.3.4	ORNL Area Seasonal Wind Roses – Inversion Conditions
2.3.5	Pibal and Rawin Wind Roses at Knoxville and Nashville for Various Altitudes
2.3.6	Melton Valley Drainage Map
3.1.1	Isometric of Pools and Experimental Facilities
3.1.2	Isometric of Water and Control Wing
3.2.1	Ground-Floor Plan
3.2.2	First-Floor Plan
3.2.3	Second-Floor Plan
3.2.4	Third-Floor Plan
3.2.5	East-West Section
3.2.6	North-South Section
3.3.1	Second Floor of Reactor Building
3.3.2	First Floor of Reactor Building
3.3.3	Reactor Pool, East-West Section
3.3.4	Ground Floor of Reactor Building
3.3.5	Reactor Pool, Horizontal Section
3.4.1	Control Wing
3.4.2	First Floor of Water Wing
3.4.3	Ground Floor of Water Wing
3.5.1	Auxiliary Buildings
3.5.2	Office and Maintenance Buildings
4.1.1	Master Airflow Diagram

Figure No.	Title
4.2.1	Ground-Floor Pressures
4.2.2	First-Floor Pressures
4.2.3	Second-Floor Pressures
4.2.4	Third-Floor Pressures
4.4.1	Airflow Diagram
4.5.1	Special Building Hot Exhaust System
4.5.2	Isometric of SBHE Ducts in Reactor Building
4.6.1	Hot Off-Gas System
4.7.1	Isometric of Exhaust Fans and Filter Pits
4.7.2	SBHE Filter Pits
4.7.3	HOG Filter Pits
4.9.1	SBHE Fan and FAI Controls
4.9.2	HOG Fan Controls
5.1.1	Exploded View of Core
5.1.2	Vertical Section of Reactor Vessel and Core
5.1.3	Plan View of Reactor Core
5.1.4	Reactor Assembly
5.2.1	Target Assembly
5.2.2	Target Rod
5.2.3	Variation with Time of the Target Heat-Generation Rate and Cross Section
5.2.4	Fuel Element
5.2.5(*a*)	Cross Section of Fuel Plate Before Bending
5.2.5(*b*)	Fuel and Burnable-Poison Distribution in the As-Built Element
5.2.6	Reflector – Elevation
5.2.7	Reflector – Plan at Center Line
5.2.8	Control Plates
5.2.9	Control Plate Positions During a Cycle
5.3.1	Core and Reflector Support
5.4.1	Reactor Pressure Vessel
5.4.2	Reactor Vessel Top Head
5.4.3	Reactor Vessel Bottom Head
5.5.1	Pool Cover and Personnel Bridge
5.6.1	Horizontal Beam Tubes
5.6.2	Beam Tube Cooling
6.2.1	Primary Coolant System
6.2.2	Primary Coolant – Schematic Flow Diagram
6.2.3	Primary Coolant Equipment Arrangement
6.2.4	Reactor Shield, Heat Exchanger Cells, and Pool Structures – Horizontal Section

Figure No.	Title
6.2.5	Heat Exchanger Cell and Pool Structure – Vertical Section
6.2.6	Primary Coolant Pump Motors
6.2.7	Characteristic Curves for Primary Coolant Pumps
6.2.8	Primary Coolant Pump Motor Test Circuits
6.2.9	Characteristic Curves for Main Pressurizer Pump
6.2.10	Primary Coolant Cleanup System
6.2.11	Primary Coolant Cleanup – Schematic Flow Diagram
6.2.12	Primary Coolant Cleanup Equipment Arrangement
6.2.13	Primary Coolant Cleanup System Details
6.2.14	Primary Water Replacement
6.3.1	Secondary Coolant System
6.3.2	Secondary Coolant – Schematic Flow Diagram
6.3.3	Secondary Coolant Equipment Arrangement
6.3.4	Typical Secondary Coolant Temperature Response Following Startup
6.3.5	Characteristic Curves for Secondary Coolant Pumps
6.4.1	Pool Coolant System
6.4.2	Pool Coolant – Schematic Flow Diagram
6.4.3	Pool Coolant Equipment Arrangement
6.4.4	Pool Cleanup System
6.4.5	Pool Cleanup – Schematic Flow Diagram
6.4.6	Pool Cleanup Equipment Arrangement
6.4.7	Defective Element Storage Tank
6.4.8	Pool Cleanup System Details
6.5.1	Fission Product Energy Release vs Time After Shutdown
7.2.1	Schematic Representation of the Reactor Core
7.2.2	Typical Radial Thermal-Neutron-Flux Distribution
7.2.3	Typical Axial Thermal-Neutron-Flux Distribution
7.3.1	Reaction Paths in the Production of Cf^{252} from Pu^{242}
7.3.2	Cf^{252} Production as a Function of Thermal-Neutron Flux
7.3.3	Typical Radial Power Distributions During a Cycle
7.3.4	Average Thermal-Neutron Flux in the Target During a Cycle
7.3.5	Reactivity Variations During a Cycle
7.3.6	Island Void Effects on Reactivity
7.3.7	Differential Reactivity of the Shim-Safety Group
7.4.1	Normal Deviations of Involute Fuel Plates and Coolant Channels
7.4.2	Deflections of an Involute Plate with Uniform Pressure on the Convex Side
7.5.1	Effect of Operating Pressure and Flow Rate on Burnout Power Levels
7.5.2	Effect of Coolant-Channel-Thickness Tolerances on Burnout Power Levels

Figure No.	Title
8.1.1	Allowable Operating Range
8.1.2	Control Room
8.2.1(*a*)	Control Plate Drives
8.2.1(*b*)	Scram Plate Magnet and Latch Mechanism
8.2.2	Coincidence Magnet
8.3.1	Block Diagram of Control System
8.4.1	Block Diagram of Safety System
8.4.2	Block Diagram of Safety Channel A
8.5.1	Multisection Ionization Chamber
8.5.2	Ion Chamber Positioning Mechanism
8.5.3	Multiple Channel Regulating System
8.5.4	Block Diagram of Regulating Channel A
8.5.5	Wide-Range Startup Channel Block Diagram
8.5.6	Small Fission Chamber Pulse-Height Characteristics
8.6.1	Typical Heat-Power Computer Block Diagram
8.6.2	Simplified Block Diagram of Instrument Air System
8.7.1	Gaseous-Waste Monitoring System
8.7.2	Liquid-Waste Monitoring System
8.8.1	Permissible $\Delta k/k$ vs Safety System Delay – Beginning of Cycle
8.8.2	Permissible $\Delta k/k$ vs Safety System Delay – One and One-Half Days Before End of Cycle
8.8.3	Permissible $\Delta k/k$ vs Safety System Delay – End of Cycle
9.2.1	Reactor Shield – Elevation
9.2.2	Reactor Shield – Plan
9.2.3	Attenuation in Water of Radiation from BSR
9.3.1	Beam Hole Shielding
9.4.1	Dose Rate at Outer Shield Surface
9.4.2	Primary Loop Shielding
9.4.3	Pool and Primary Coolant Cleanup Cells – Plan View
9.4.4	Pool and Primary Coolant Cleanup Cells – Elevation
9.6.1	Fuel Element In-Pool Storage
9.6.2	In-Pool Fuel Storage Rack
9.6.3	Defective Element Storage Tank Details
10.1.1	Electrical Distribution
10.1.2	Normal-Power Switchgear
10.1.3(*a*)	Normal-Emergency System No. 1, Sheet 1
10.1.3(*b*)	Normal-Emergency System No. 1, Sheet 2
10.1.4	Normal-Emergency System No. 2

Figure No.	Title
10.1.5	Instrument Power System
10.2.1	Plant Water Supply System
10.2.2	Plant Water Supply – Schematic Flow Diagram
10.3.1	Instrument Air System
10.4.1	Alarm and Communications – Outside Area
10.4.2	Alarm and Communications – Ground Floor
10.4.3	Alarm and Communications – First Floor
10.4.4	Alarm and Communications – Second Floor
10.4.5	Alarm and Comminications – Third Floor
10.4.6	Alarm and Communications – Auxiliary Buildings
11.8.1	Primary Coolant Temperature Sensor and Hot-Water Injection Nozzle
11.8.2	Hot-Water Injection System
12.2.1	ORNL Organization Chart
12.2.2	Operations Division Organization Chart
12.2.3	HFIR Functional Organization Chart

UNCLASSIFIED
ORNL-DWG 63-950

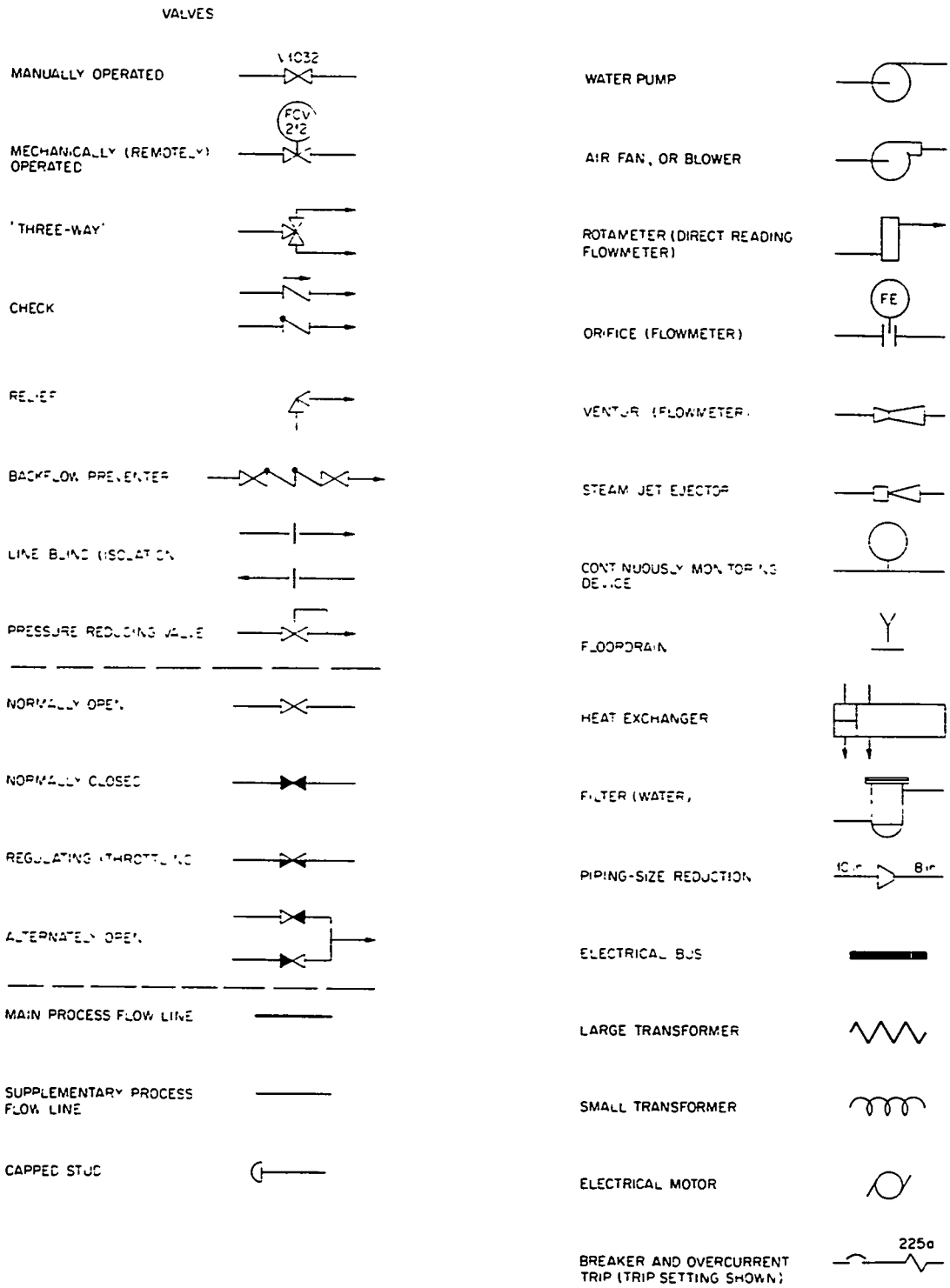

Fig. 0.0.1. Drawing Symbols.

COMMONLY USED LETTER SYMBOLS FOR INSTRUMENT IDENTIFICATION

	FIRST LETTER	SECOND LETTER	THIRD LETTER
A	Analysis	Alarm	Alarm
C	Conductivity	Control	Controller
D	Density	-	-
E	Electrical	Element (Sensor)	-
F	Flow	-	-
G	-	Glass (no measurement)	-
H	Hand (manual)	-	-
I	-	Indicating, Indicator	Indicator
L	Level	-	-
M	Moisture, Motor-actuated	Modifier, multiplier	Modifier, multiplier
O	-	Operated	-
P	Pressure	-	-
Q	-	Quantity (totalizer)	-
R	Radiation	Recording, Recorder	-
S	Speed	Safety, Switch	Switch
T	Temperature	Transmitter	Transmitter
V	Valve	Valve	Valve
W	Weight, Mass flow	(Temperature) well	-
X	Special	-	-
Z	Zone (position)	-	-

Pd and ΔT indicate differential pressure and temperature.

Example: Flow Indicator, Transmitter FIT 111

Pressure Safety Valve PSV 111

SYSTEM ABBREVIATIONS

CHOG	Closed Hot Off-Gas
FAI	Fresh-Air Intake
HOG	Hot Off-Gas
ILW	Intermediate Level Waste
OHOG	Open Hot-Off Gas
PC	Primary Coolant
PWD	Process Waste Drains
SBHE	Special Building Hot Exhaust

Fig. 0.0.2. Abbreviations and Commonly Used Letter Symbols for Instrument Identification.

UNCLASSIFIED
ORNL-LR-DWG 54678

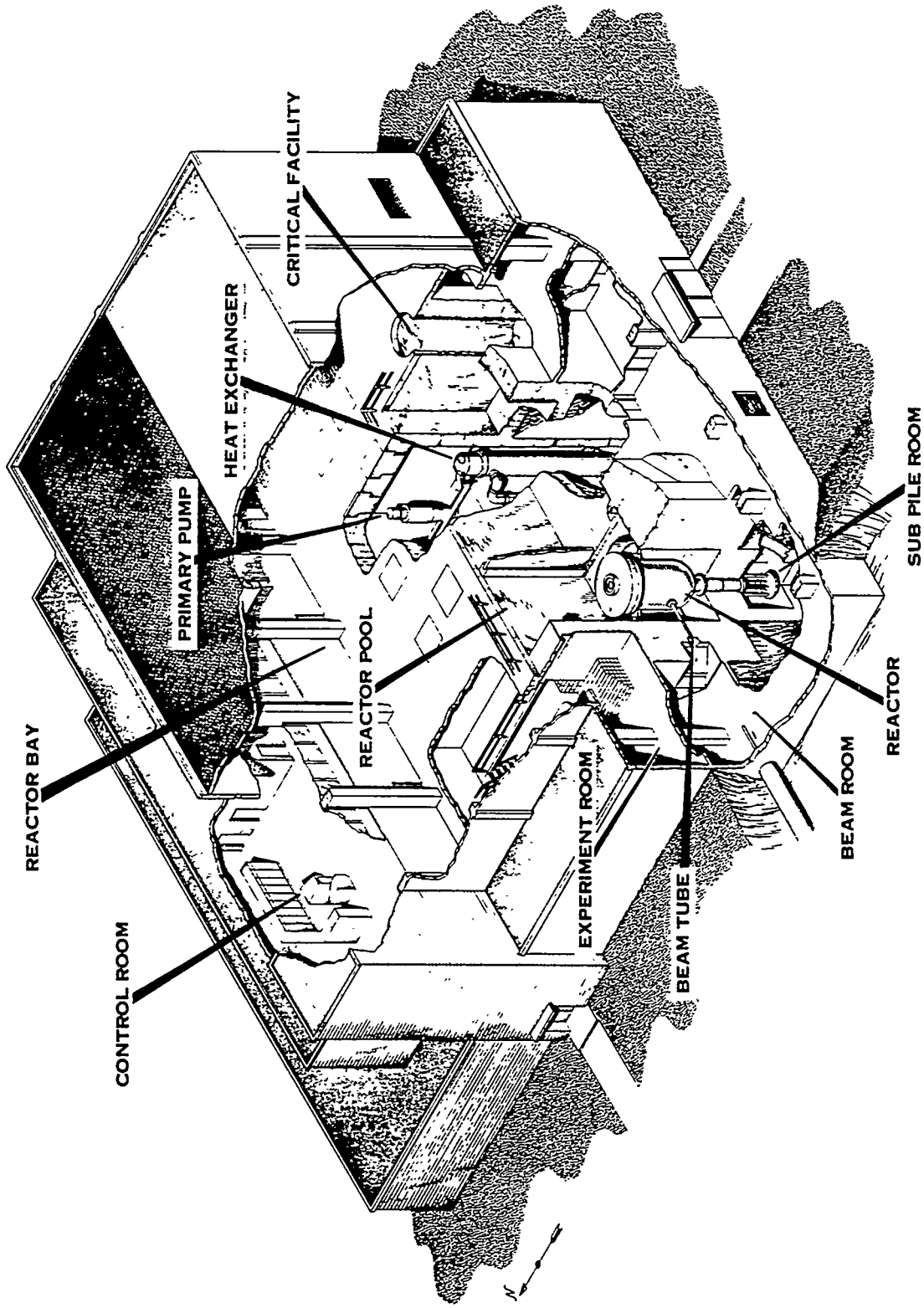

Fig. 1.2.1. Isometric Cutaway of Reactor Building.

ORNL-LR-DWG-65776
UNCLASSIFIED

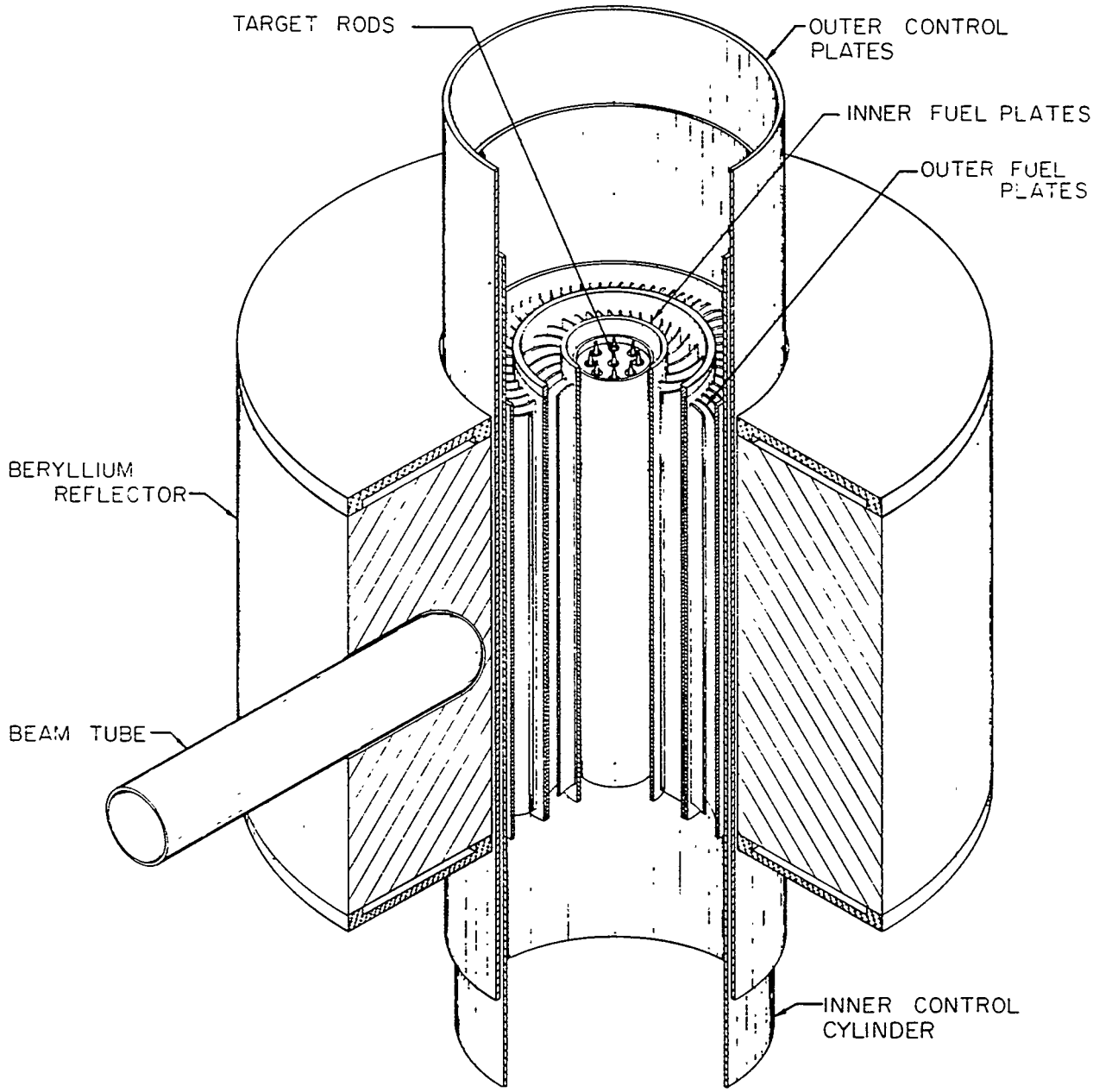

Fig. 1.2.2. Illustration of Core.

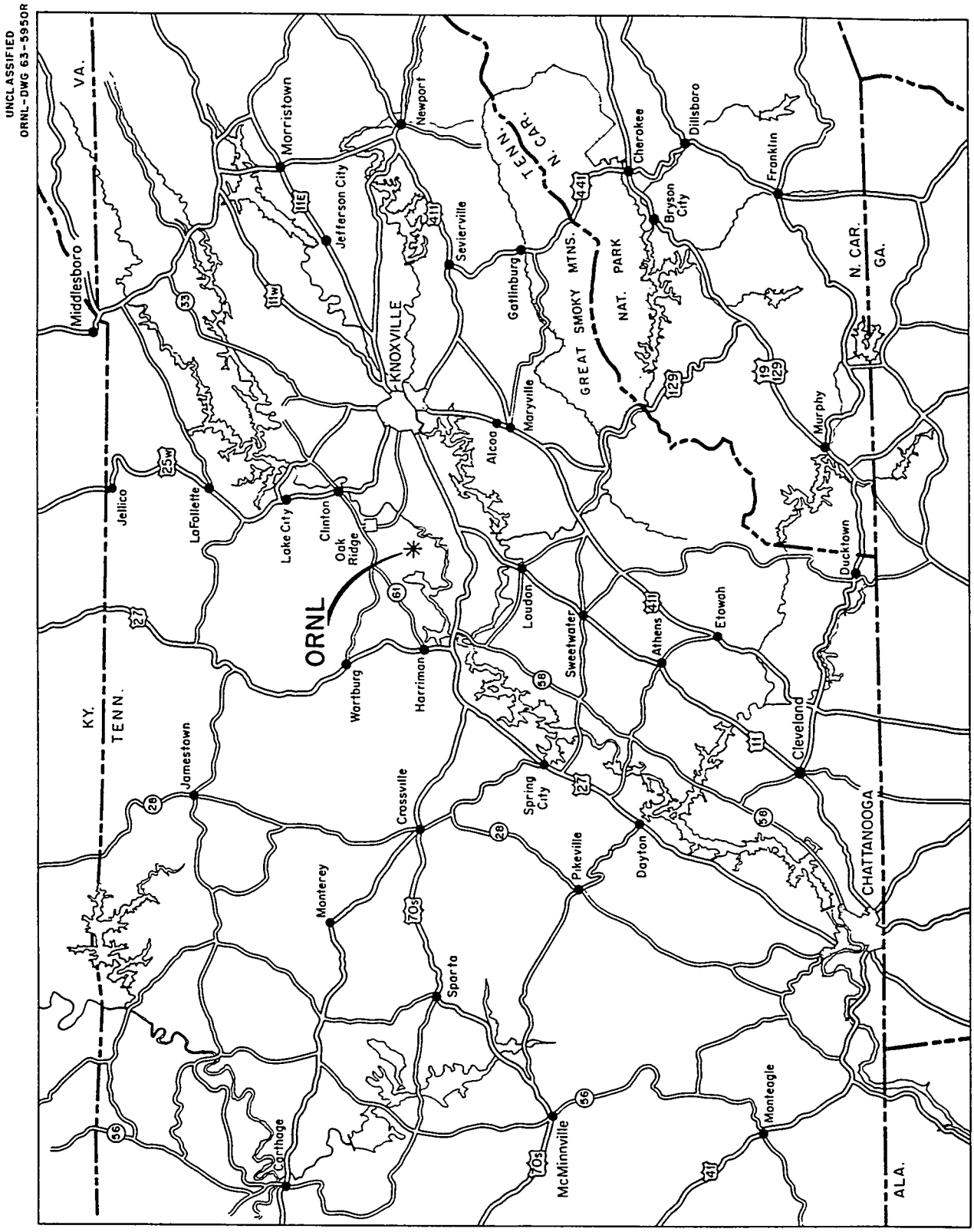

Fig. 2.1.1(*a*). Road Map, Including Area Within 100 Miles of Site.

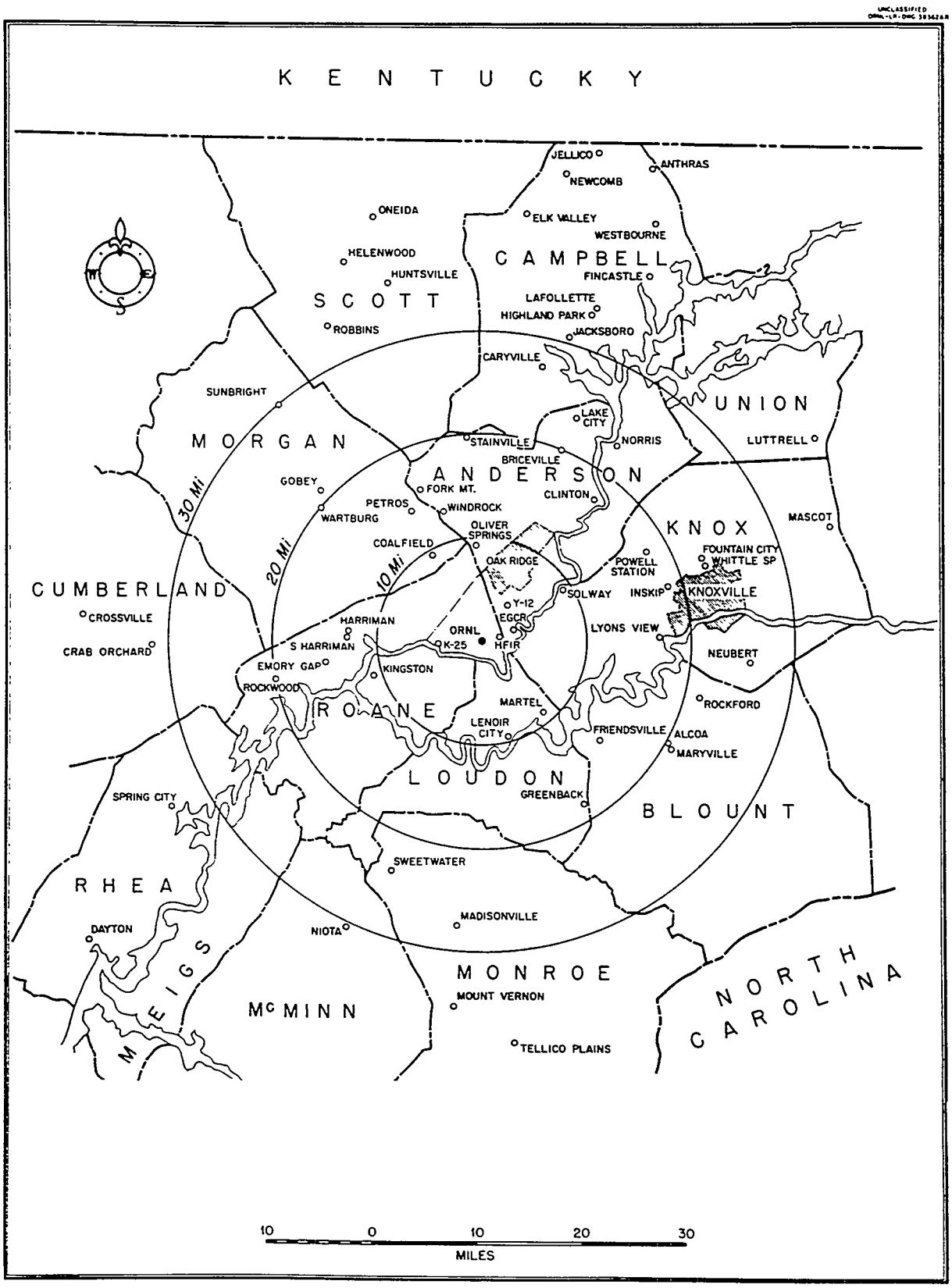

Fig. 2.1.1(*b*). Towns Within a 30-Mile Radius of Site.

Fig. 2.1

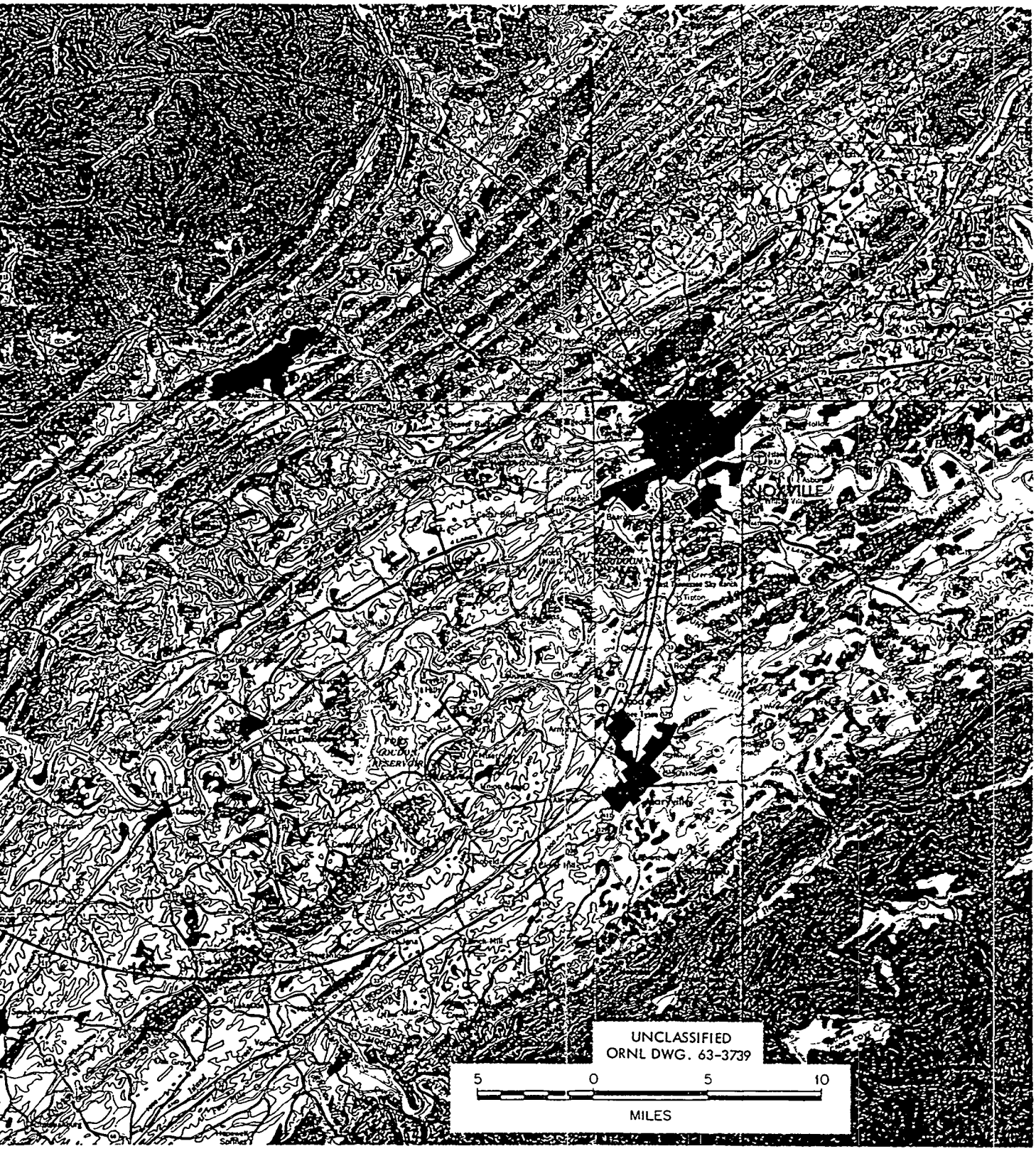

Twenty-Mile-Radius Circle of Site on Large-Scale Contour Map.

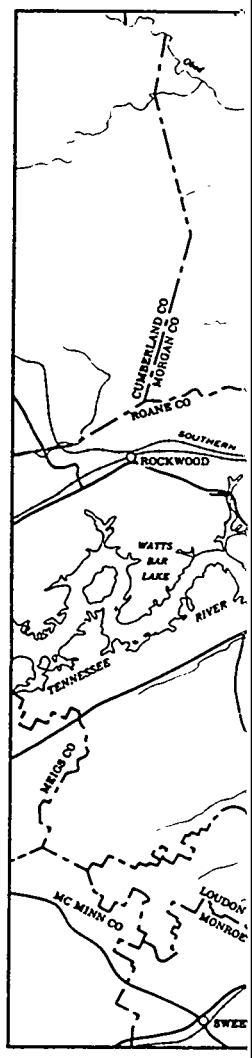
CUMBERLAND CO
MORGAN CO
ROANE CO
SOUTHERN
ROCKWOOD
WATTS
BAR
LAKE
RIVER
TENNESSEE
MEIGS CO
MC MINN CO
LOUDON
MONROE

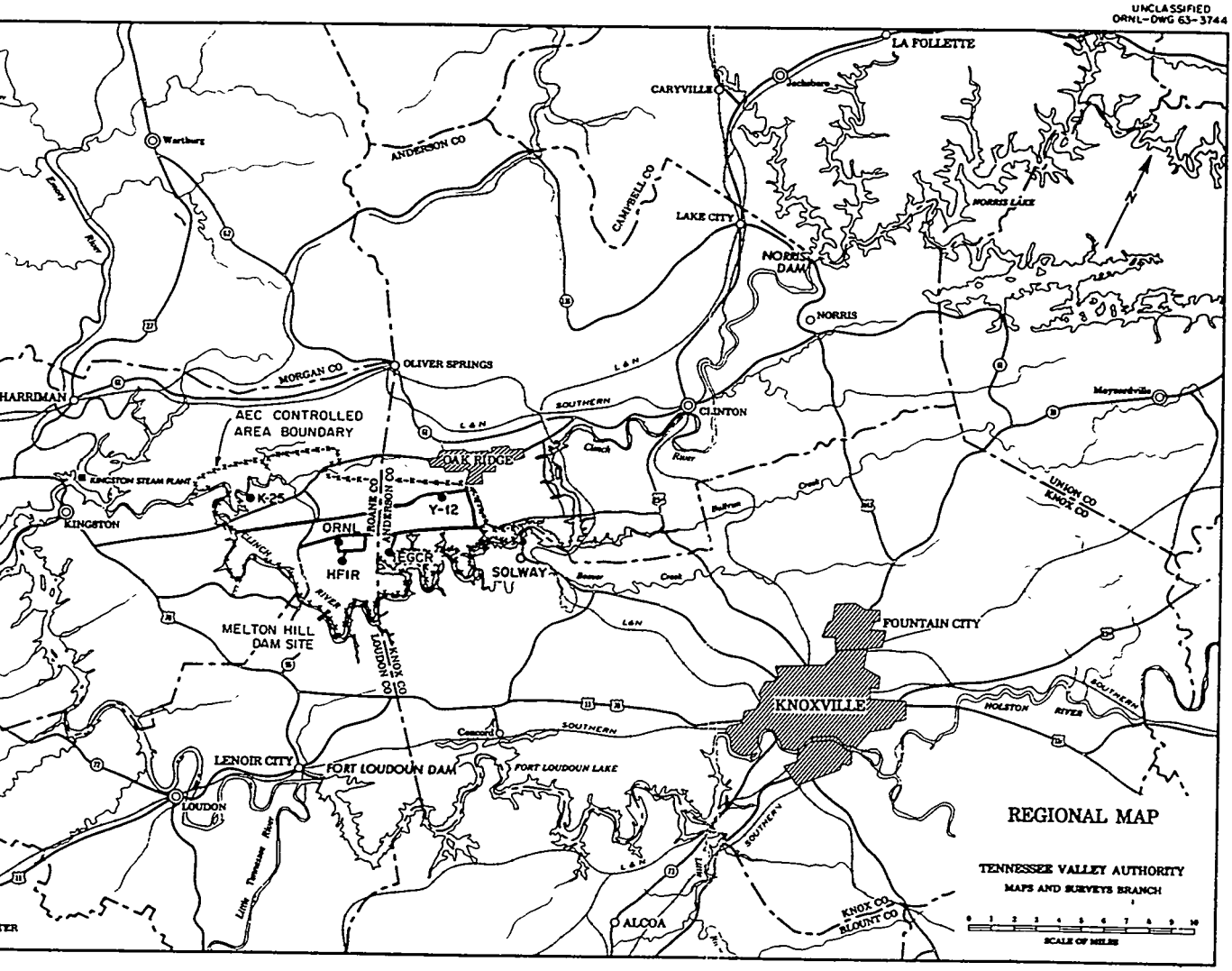

Fig. 2.1.3(*a*). Regional Map.

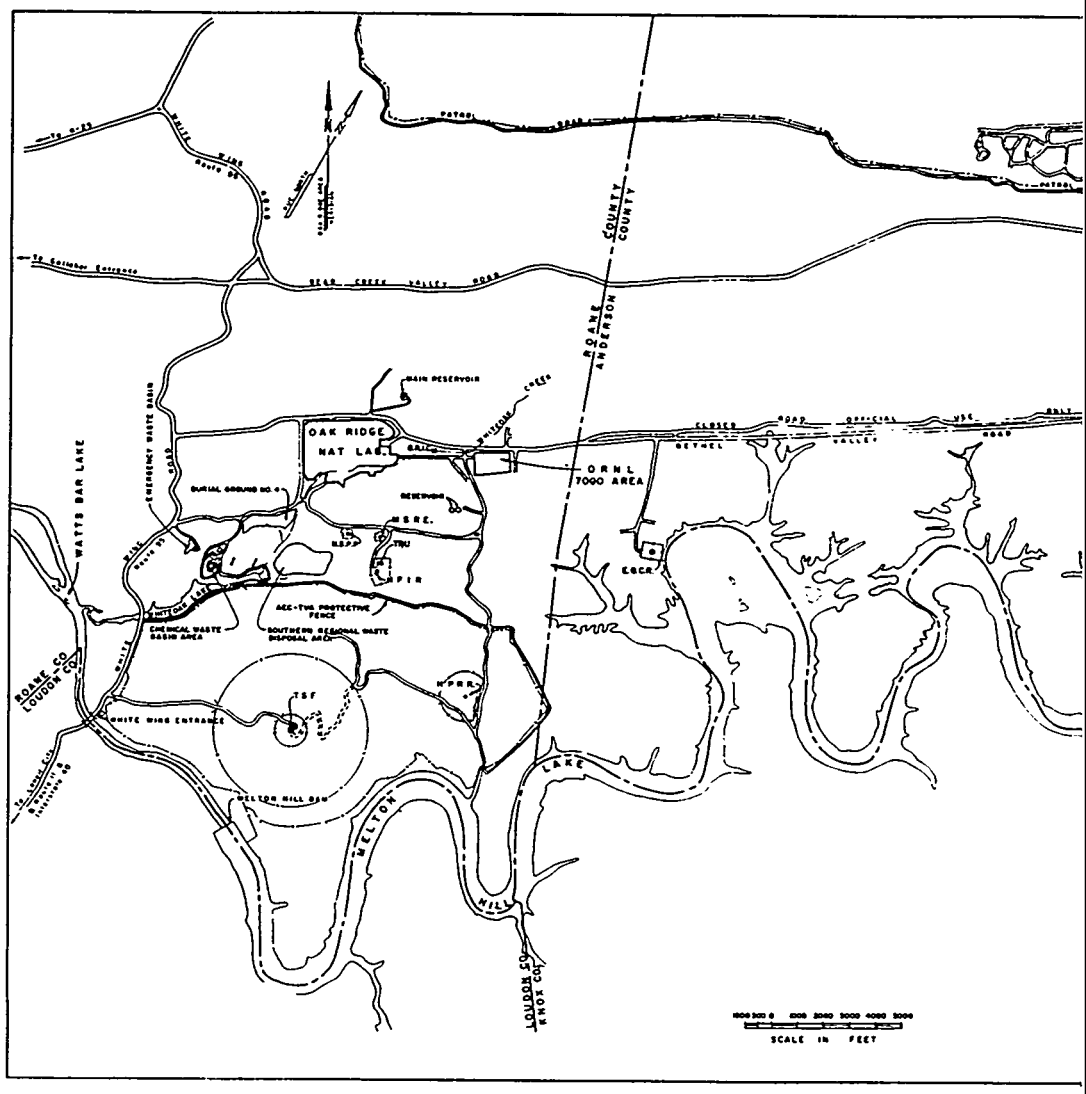

Fig. 2.1.3(*b*). Locality Map.

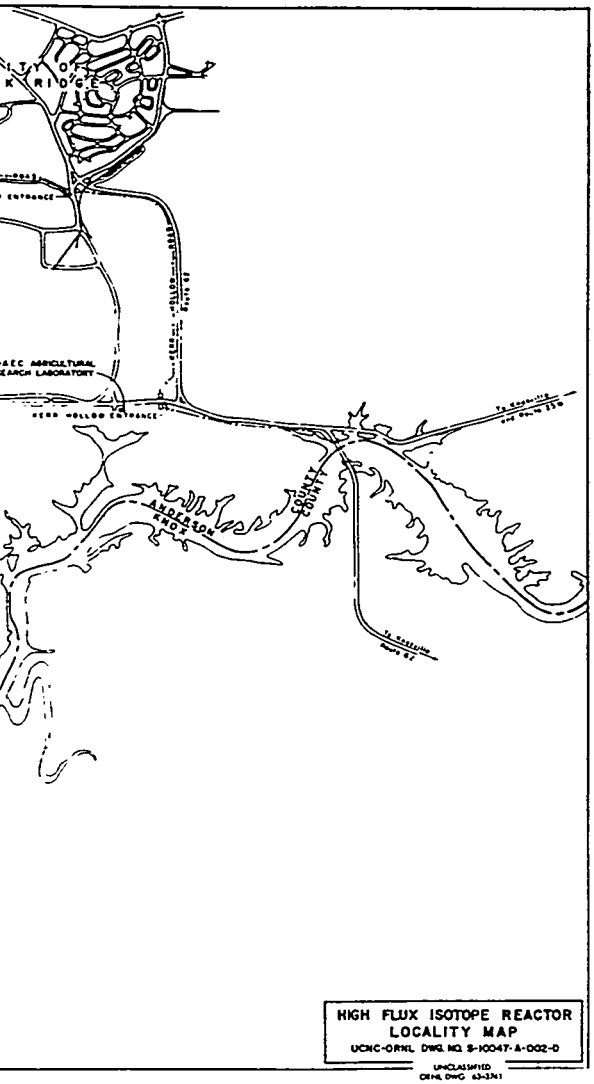

HIGH FLUX ISOTOPE REACTOR
LOCALITY MAP
UCNC-ORNL DWG NO. S-10047-A-002-D

UNCLASSIFIED
ORNL DWG 63-3741

Fig. 2.1.4. Contour

AK RIDGE AREA

OAK RIDGE, TENNESSEE

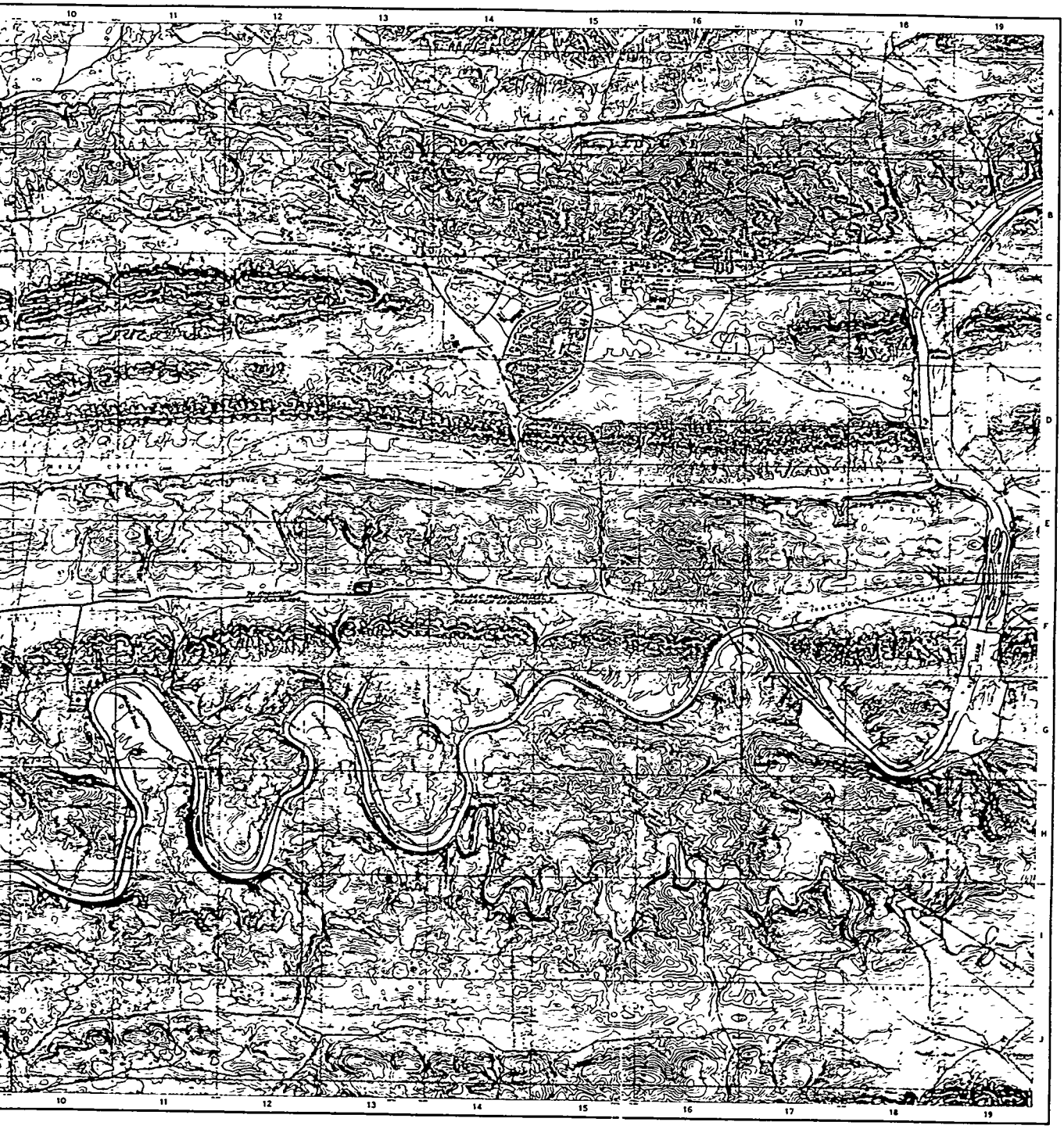

K RIDGE AREA

OAK RIDGE, TENNESSEE

SCALE 1:24 000

S-16A

p of ORNL and Melton Valley Area.

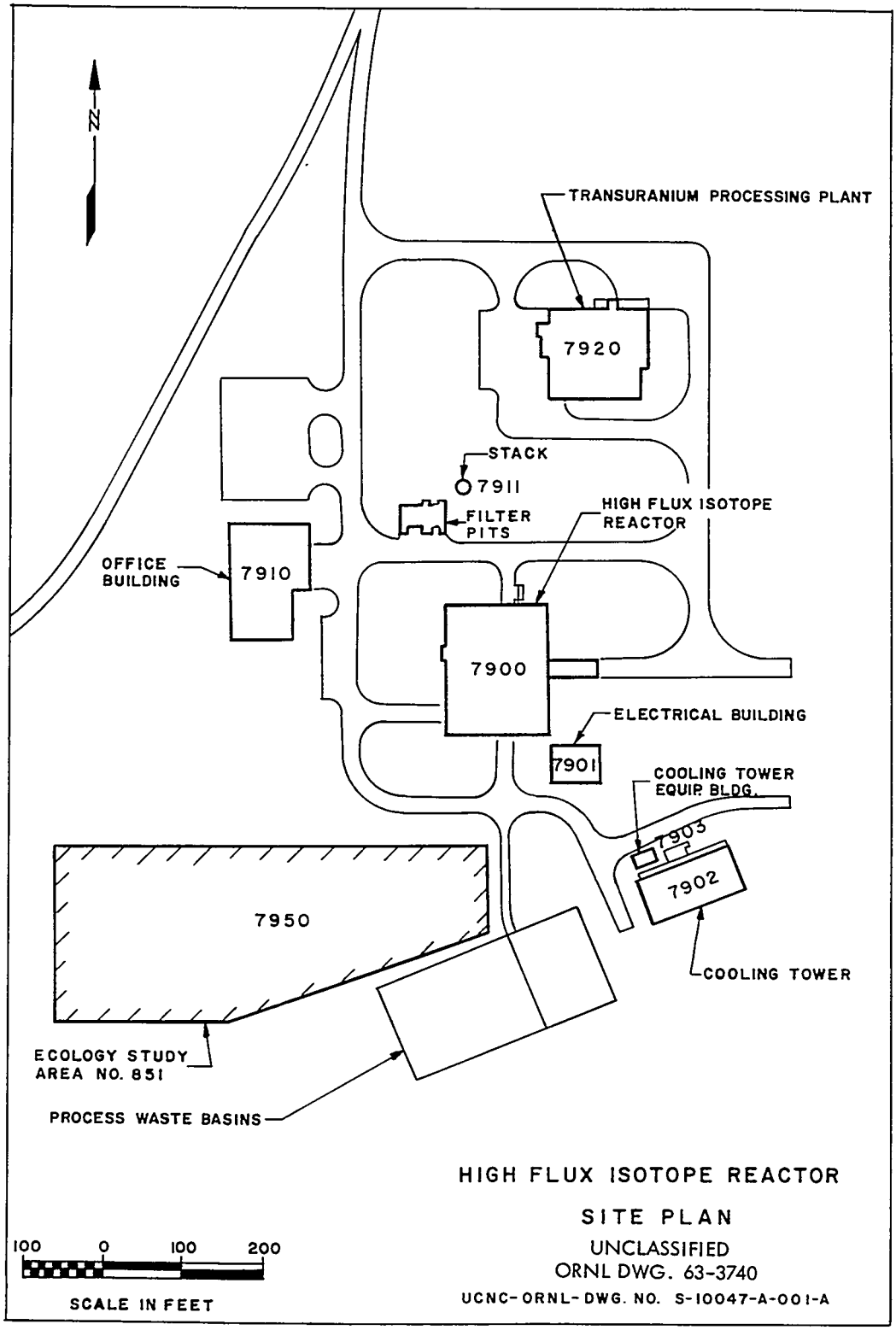

Fig. 2.1.5. Site Plan.

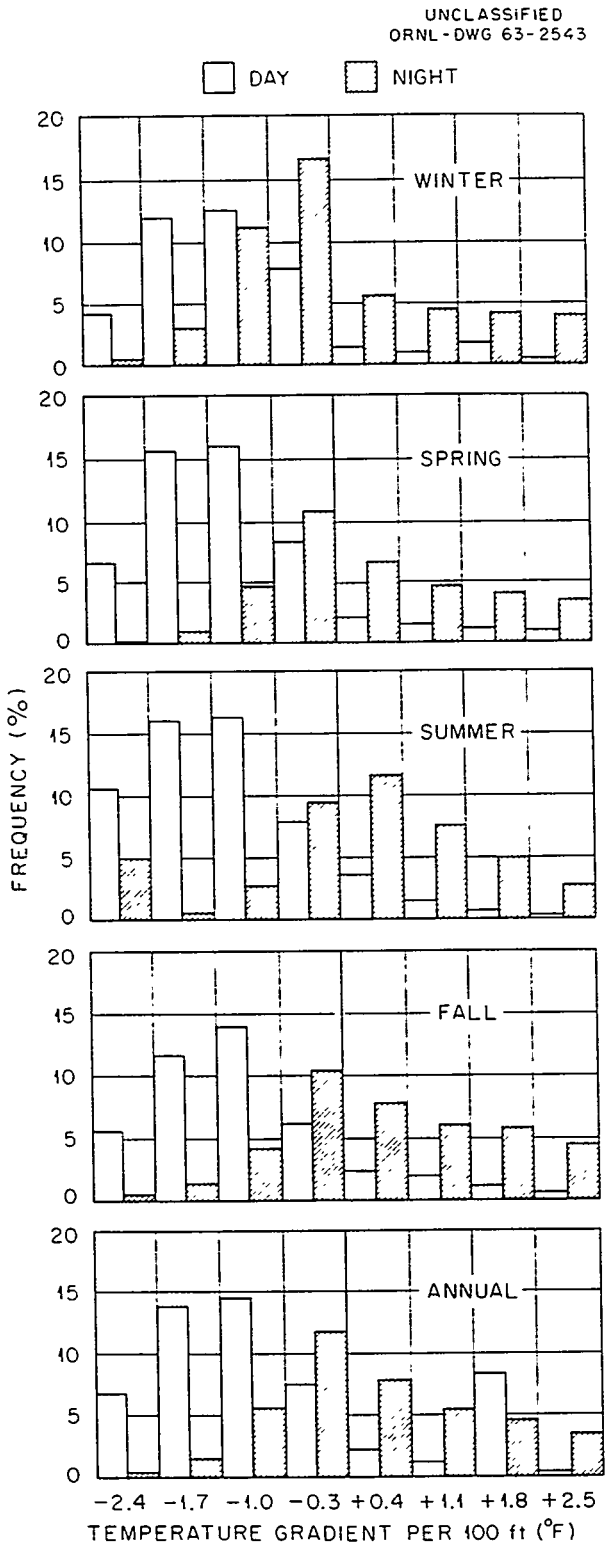

Fig. 2.3.1. Seasonal Vertical Temperature Gradient Frequency.

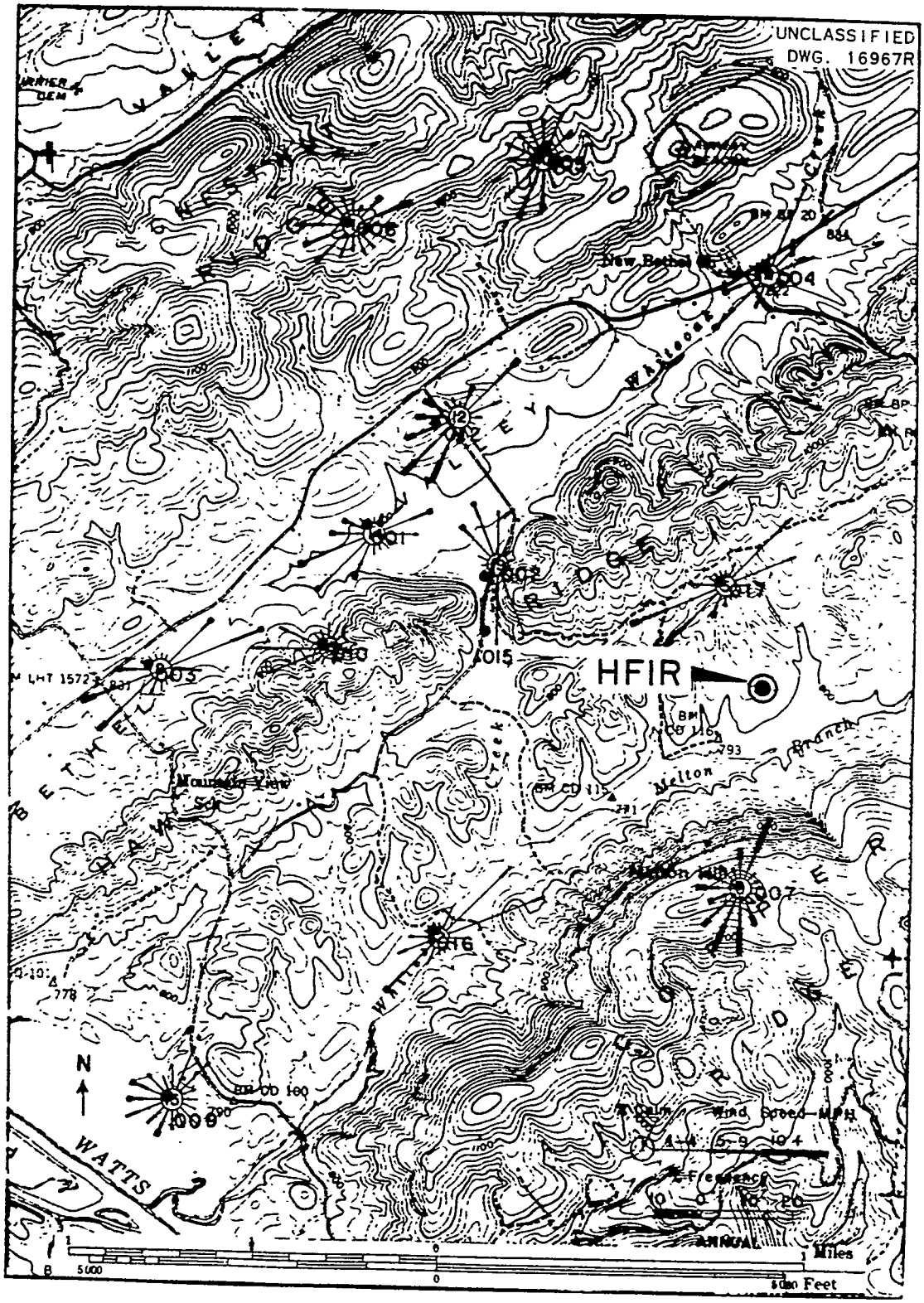

Fig. 2.3.2. Annual Frequency Distribution of Winds in the Vicinity of ORNL.

UNCLASSIFIED
ORNL-DWG 63-2943

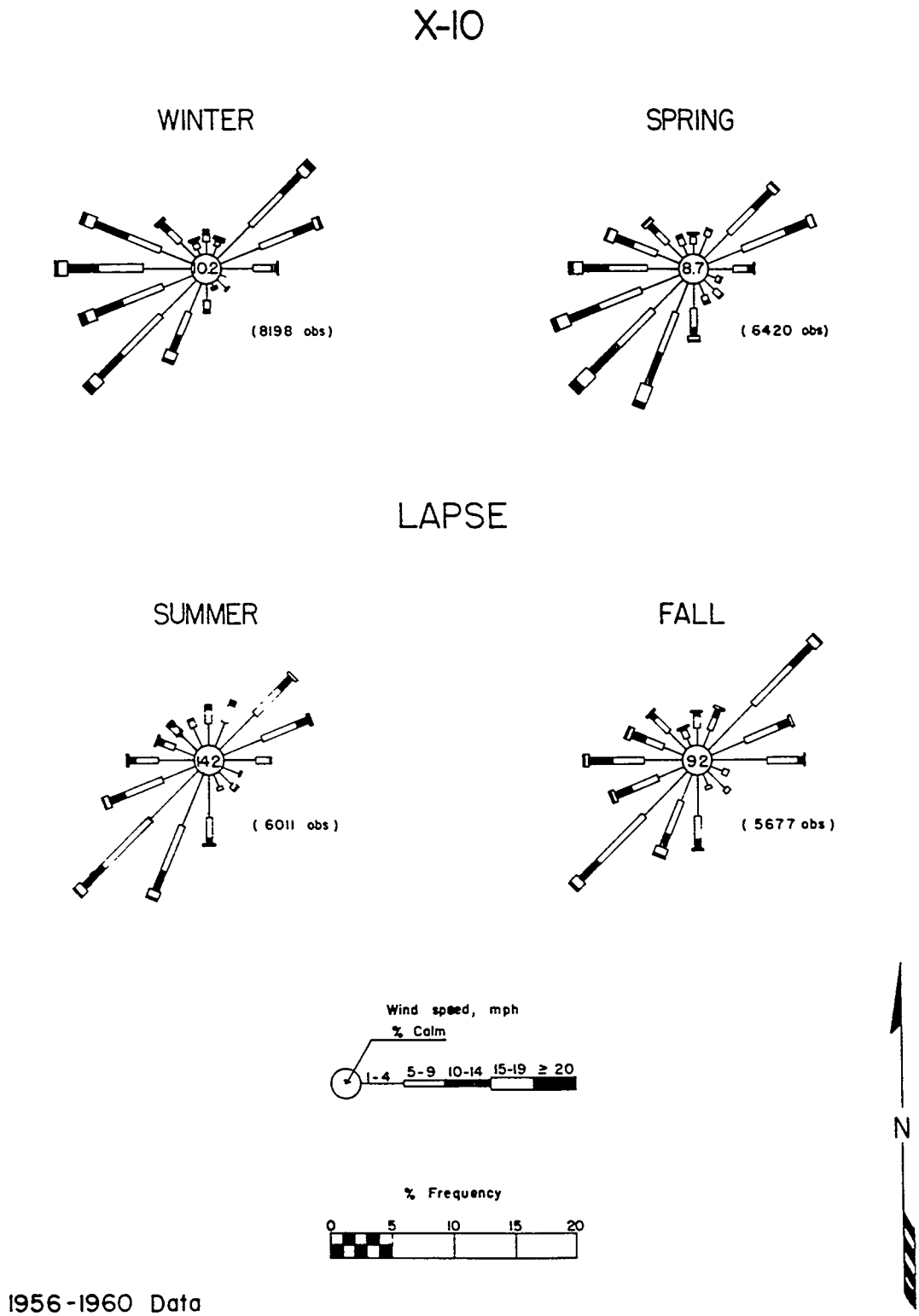

1956-1960 Data

Fig. 2.3.3. ORNL Area Seasonal Wind Roses – Lapse Conditions.

UNCLASSIFIED
ORNL-DWG 63-2944

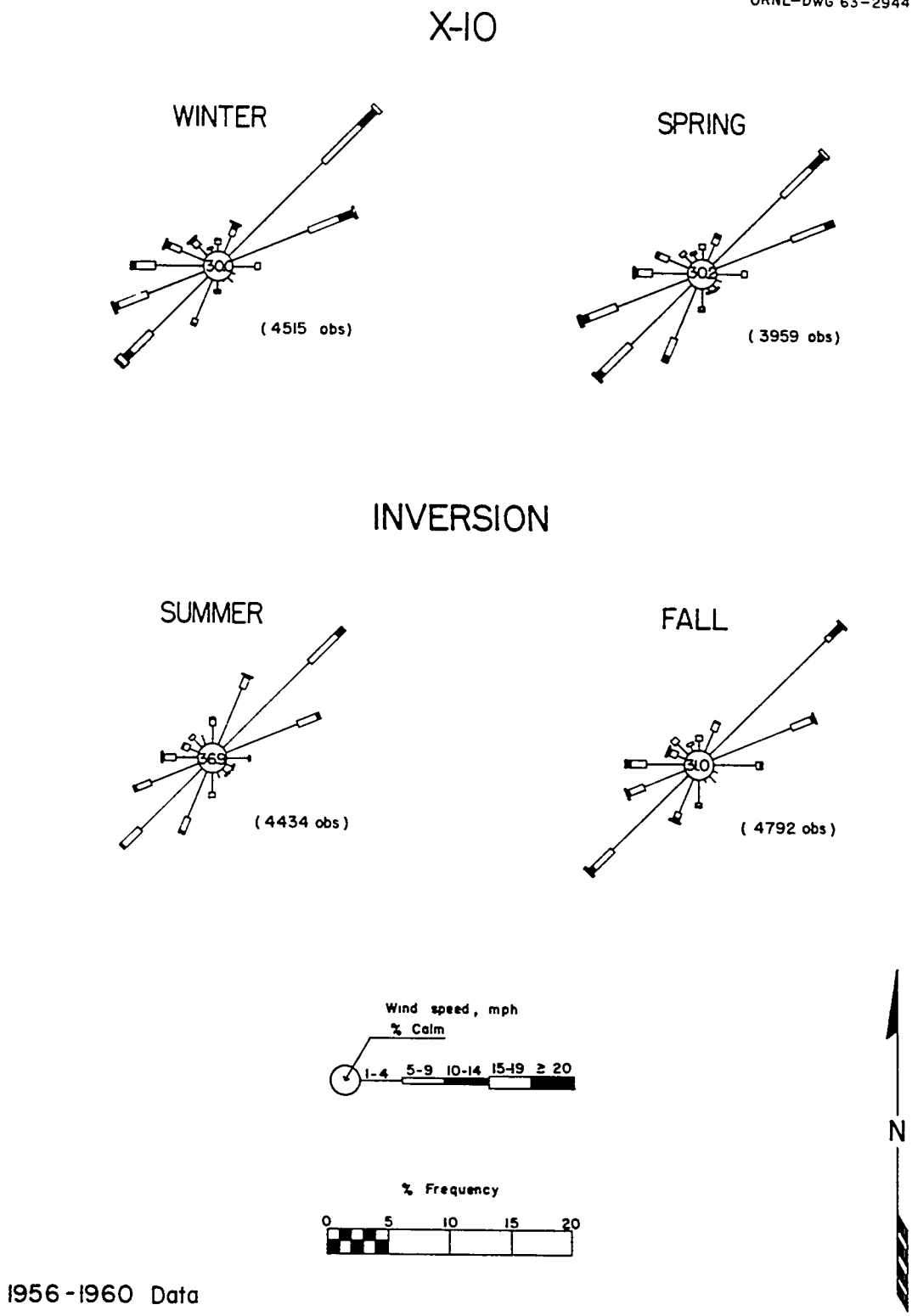

Fig. 2.3.4. ORNL Area Seasonal Wind Roses – Inversion Conditions.

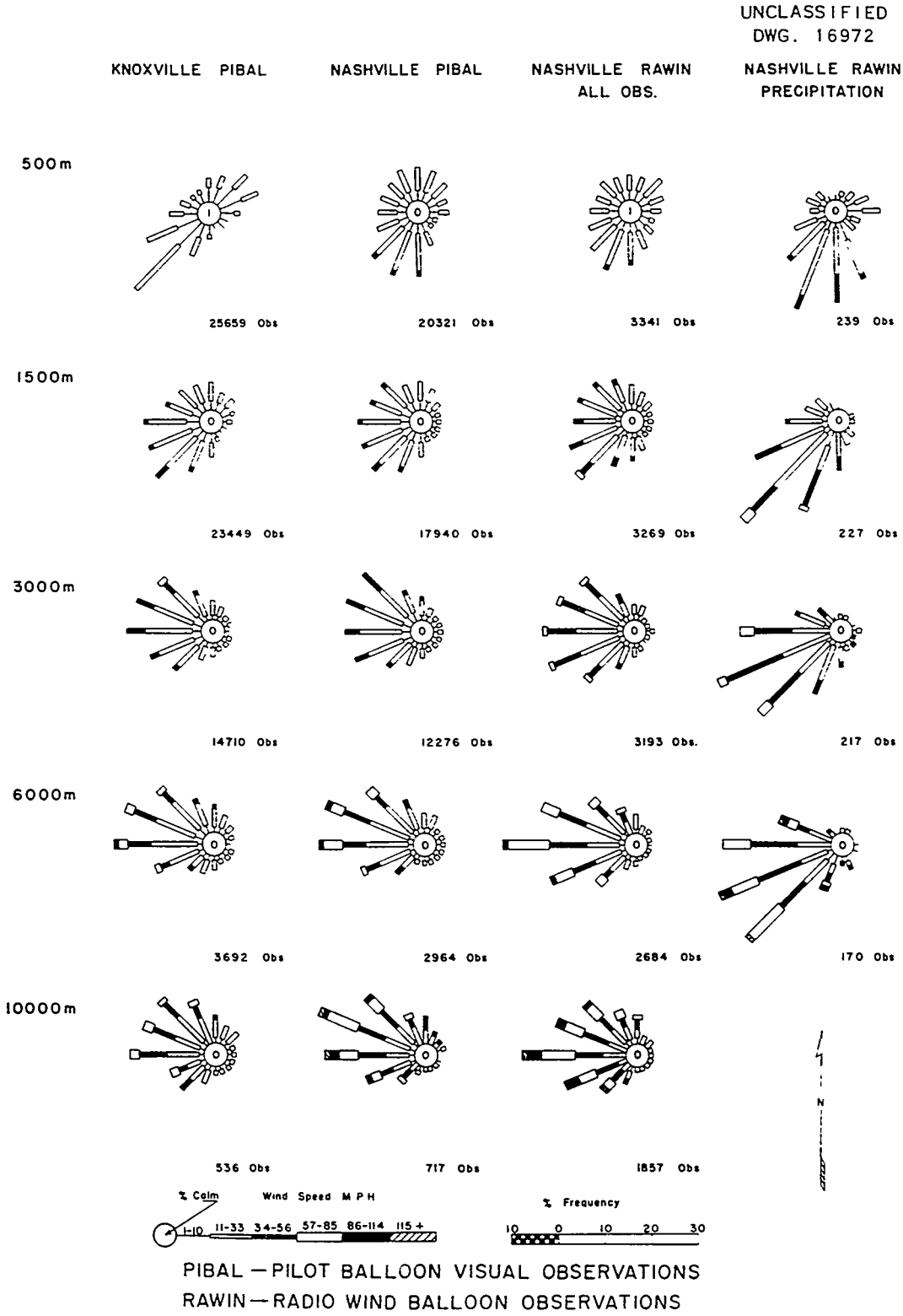

Fig. 2.3.5. Pibal and Rawin Wind Roses at Knoxville and Nashville for Various Altitudes.

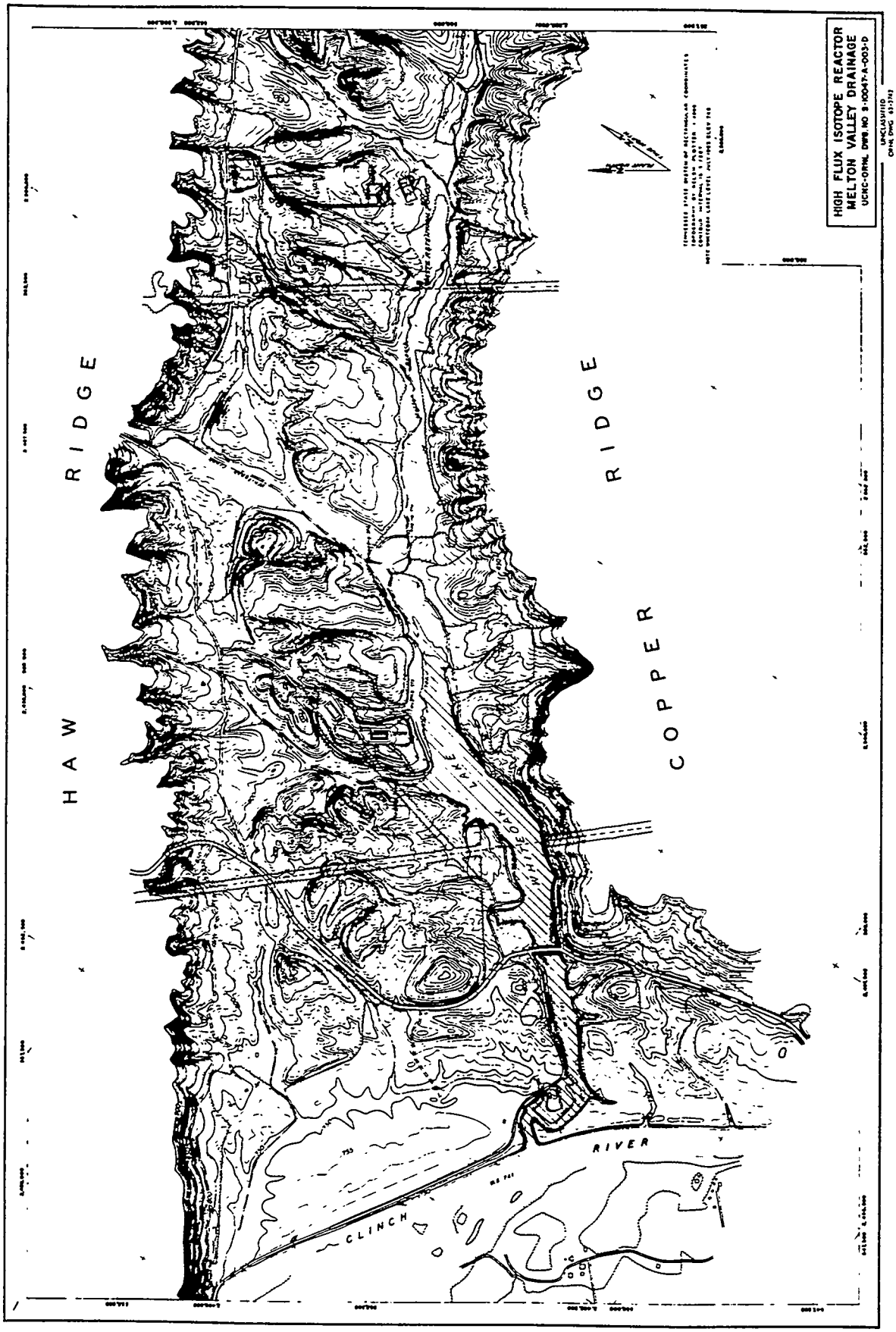

Fig. 2.3.6. Melton Valley Drainage Map.

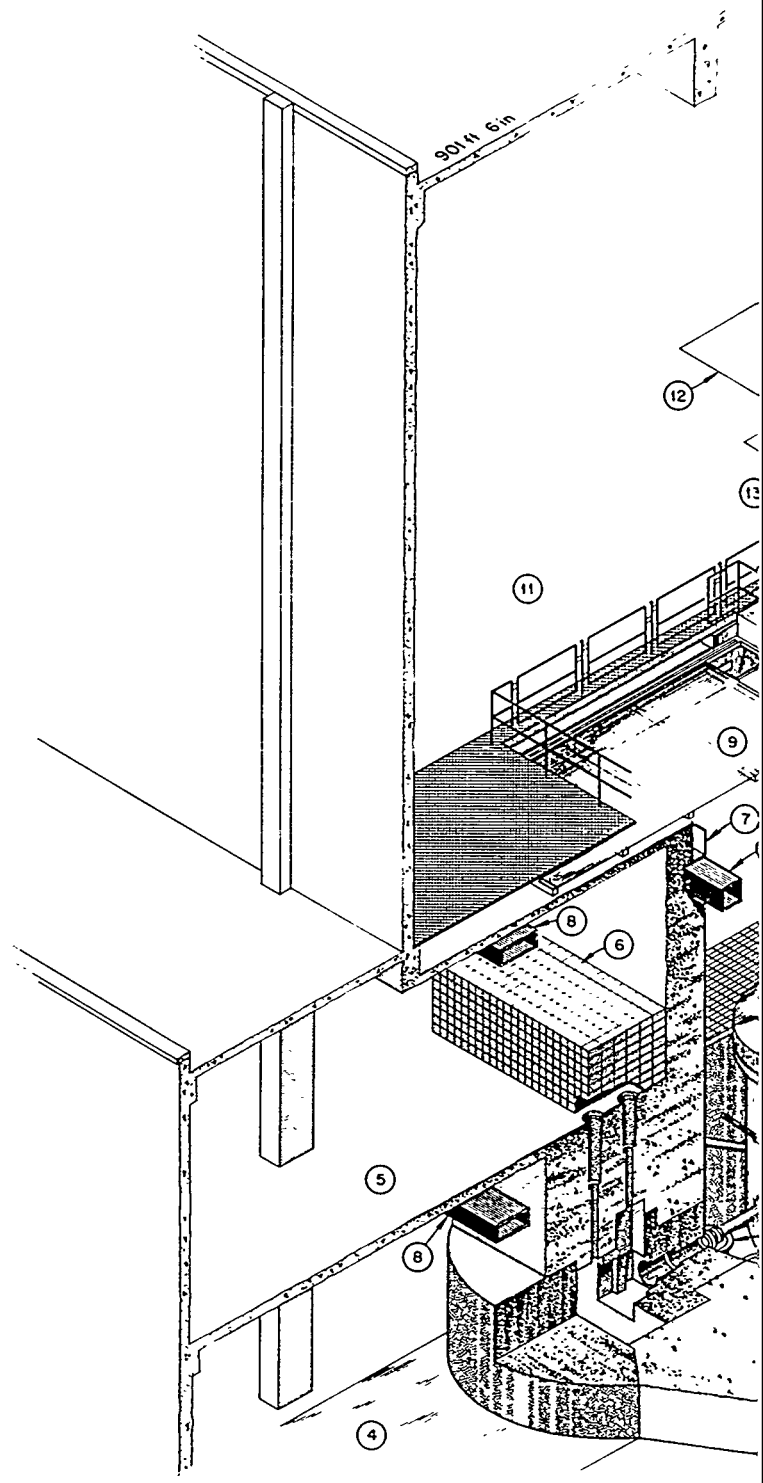
901 ft 6 in
12
13
11
9
7
8
6
5
8
4

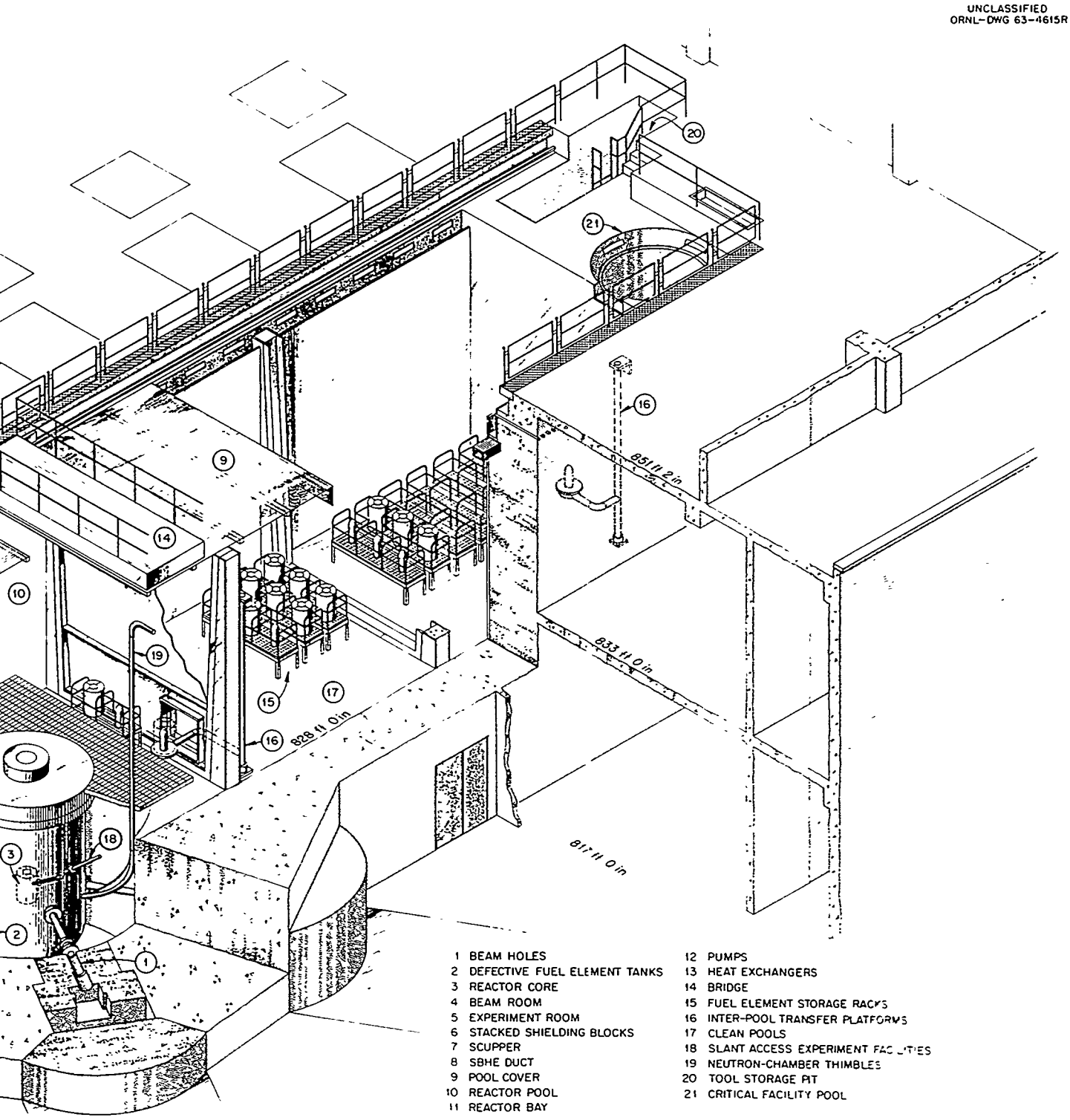

Fig. 3.1.1. Isometric of Pools and Experimental Facilities.

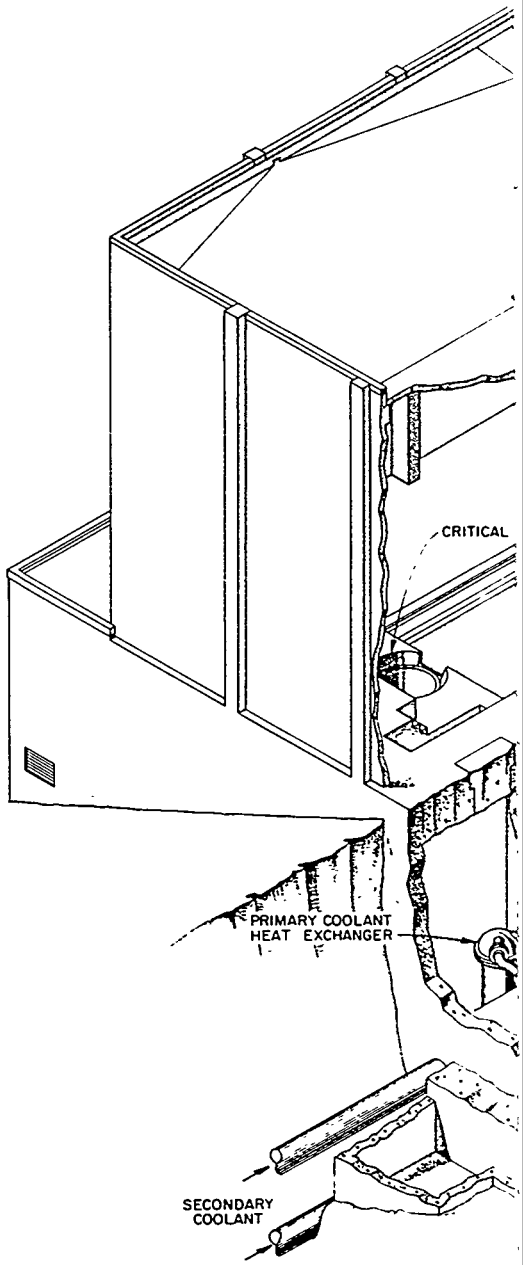
CRITICAL
PRIMARY COOLANT
HEAT EXCHANGER
SECONDARY
COOLANT

UNCLASSIFIED
ORNL-LR-DWG 77788R

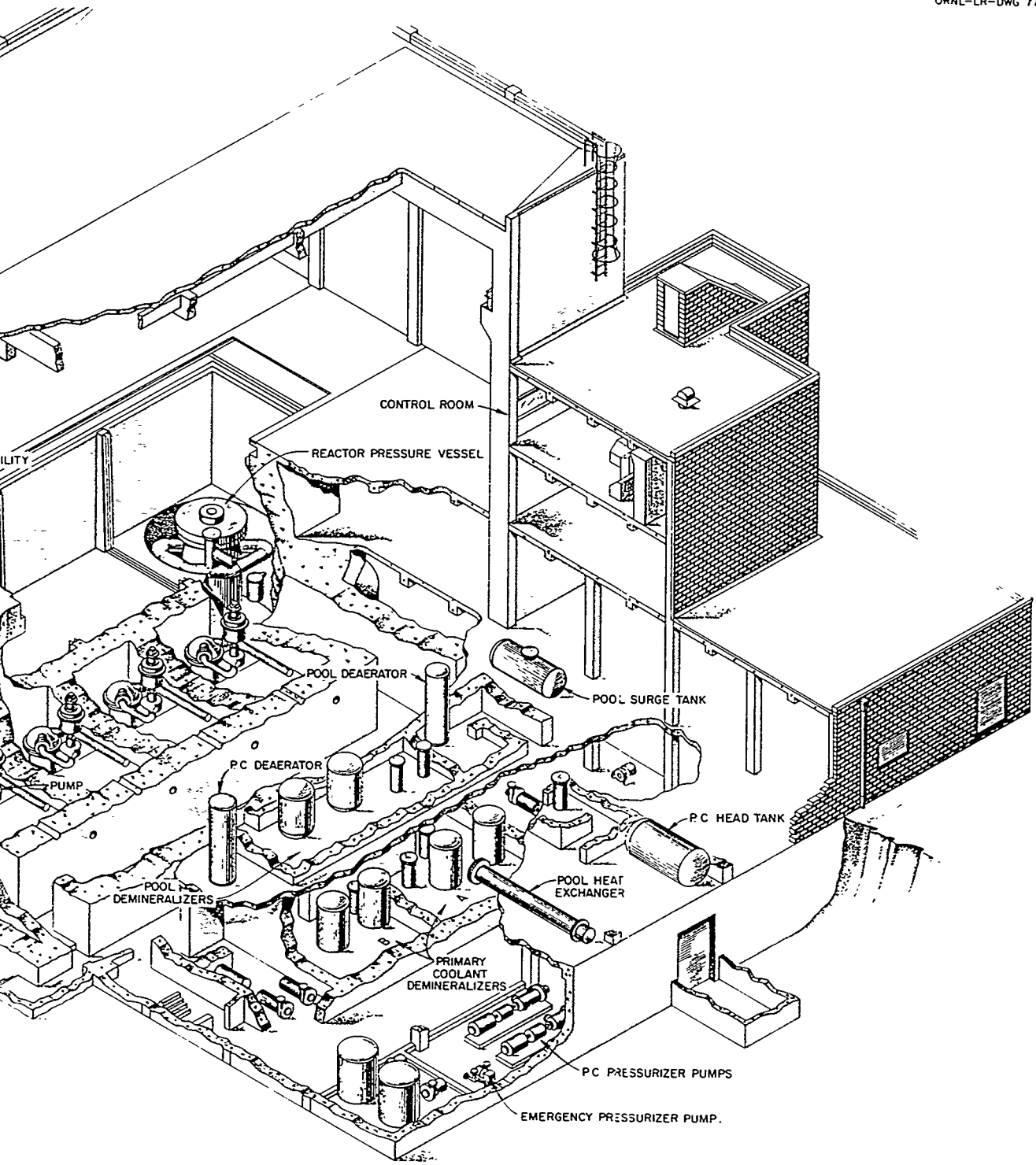

Fig. 3.1.2. Isometric of Water and Control Wing.

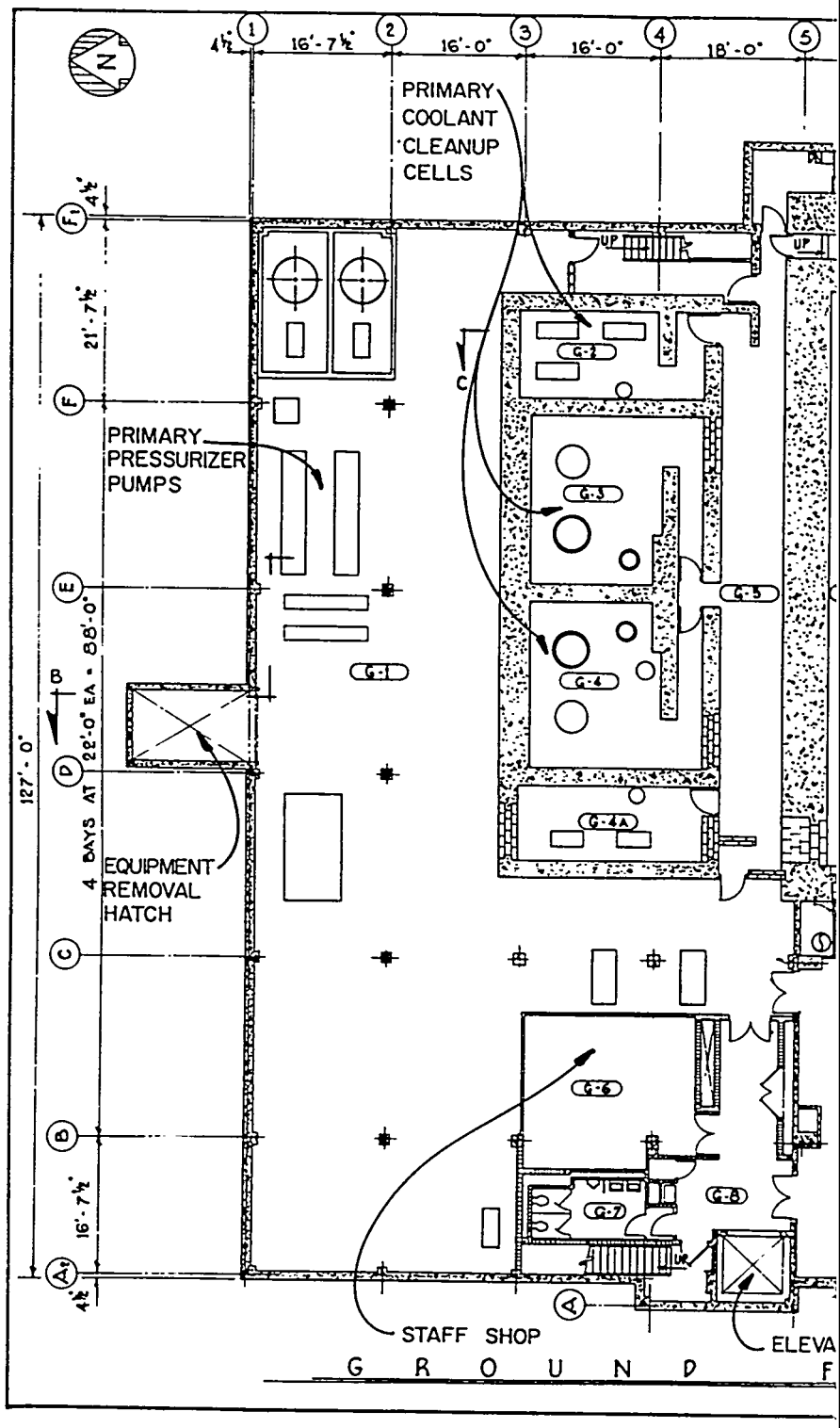
PRIMARY COOLANT CLEANUP CELLS
PRIMARY PRESSURIZER PUMPS
EQUIPMENT REMOVAL HATCH
STAFF SHOP
ELEVA
G R O U N D F
4 BAYS AT 22'-0" EA = 88'-0"
127'-0"
16'-7½"
16'-0"
16'-0"
18'-0"
21'-7½"
UP
G-1
G-2
G-3
G-4
G-4A
G-5
G-6
G-7
G-8

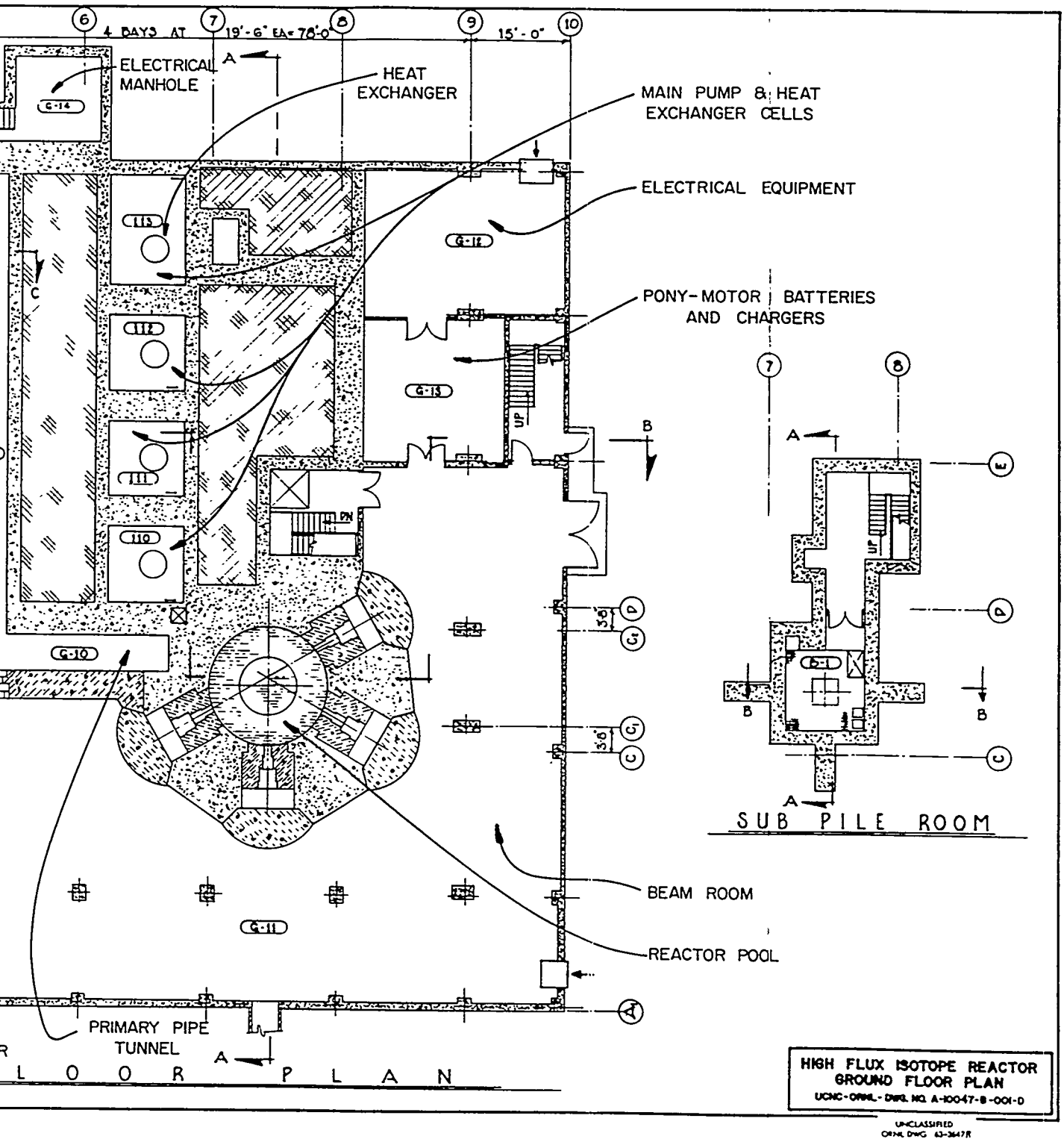

Fig. 3.2.1. Ground-Floor Plan.

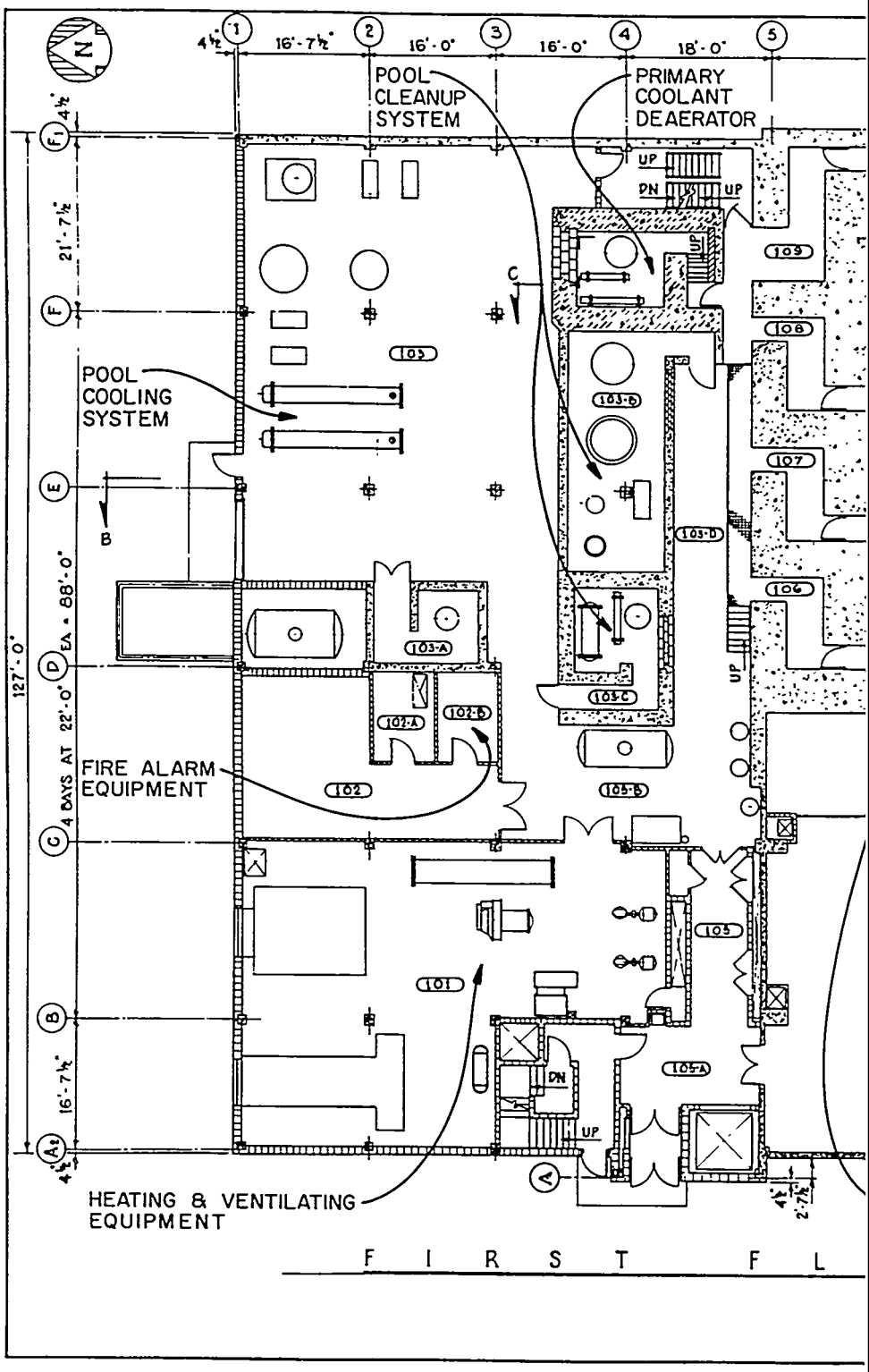
POOL CLEANUP SYSTEM
PRIMARY COOLANT DEAERATOR
POOL COOLING SYSTEM
FIRE ALARM EQUIPMENT
HEATING & VENTILATING EQUIPMENT
4 BAYS AT 22'-0" EA = 88'-0"
127'-0"
16'-7½"
16'-0"
18'-0"
21'-7½"
UP
DN
F I R S T F L

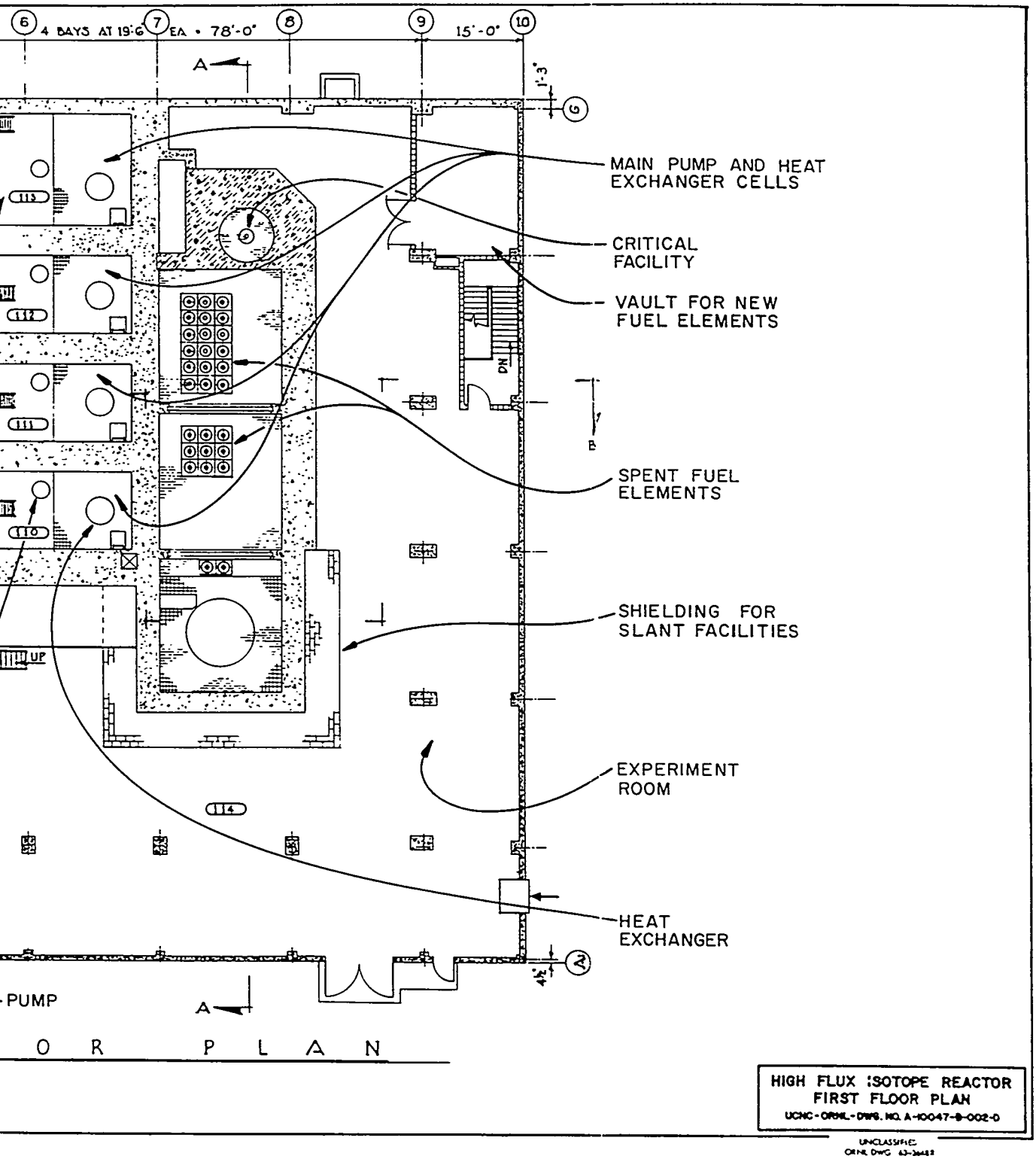

Fig. 3.2.2. First-Floor Plan.

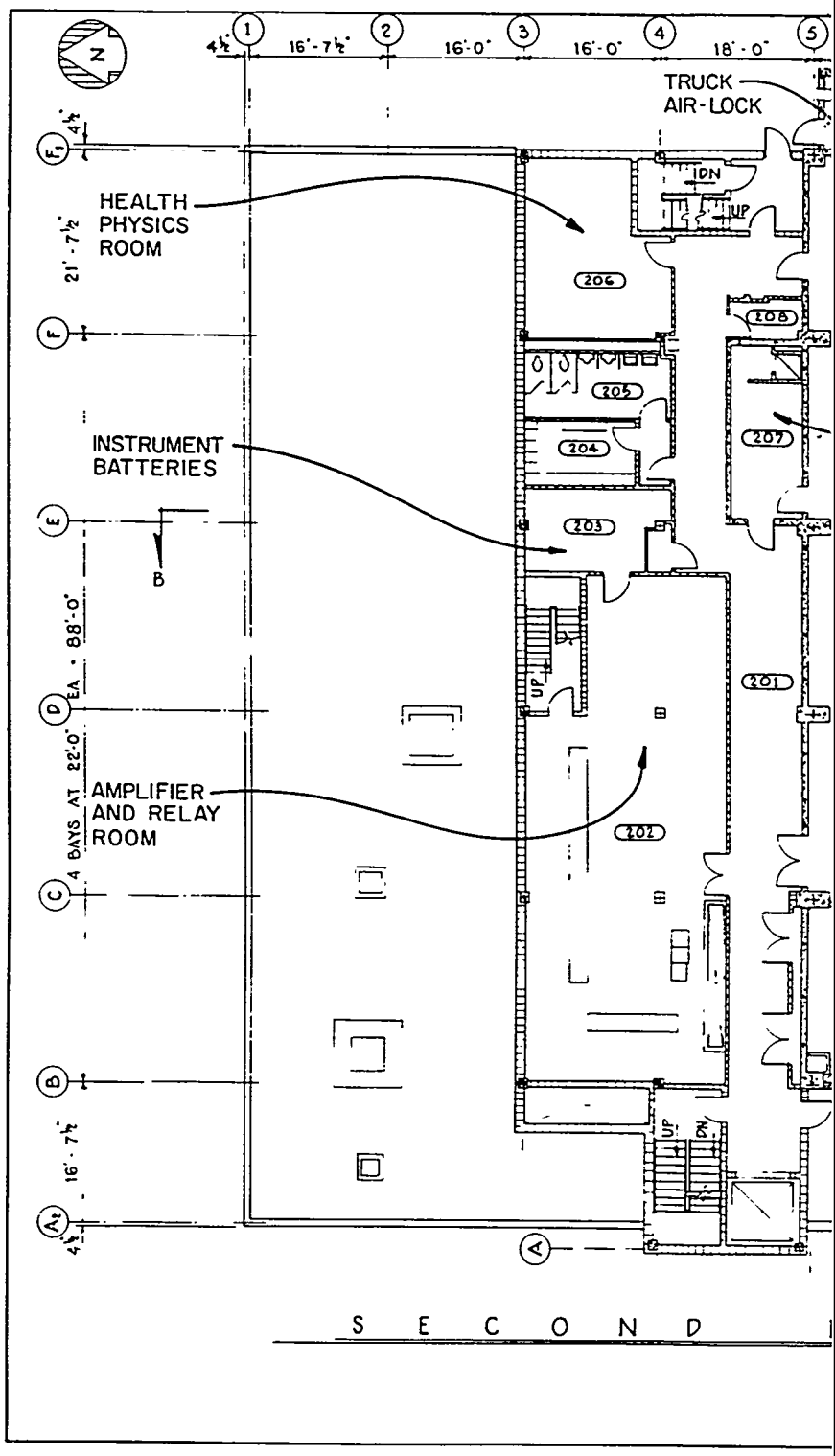
TRUCK
AIR-LOCK
HEALTH
PHYSICS
ROOM
INSTRUMENT
BATTERIES
AMPLIFIER
AND RELAY
ROOM
4 BAYS AT 22'-0" EA. = 88'-0"
21'-7½"
16'-7½"
4½"
16'-7½"
16'-0"
16'-0"
18'-0"
206
208
205
207
204
203
201
202
UP
DN
B
S E C O N D

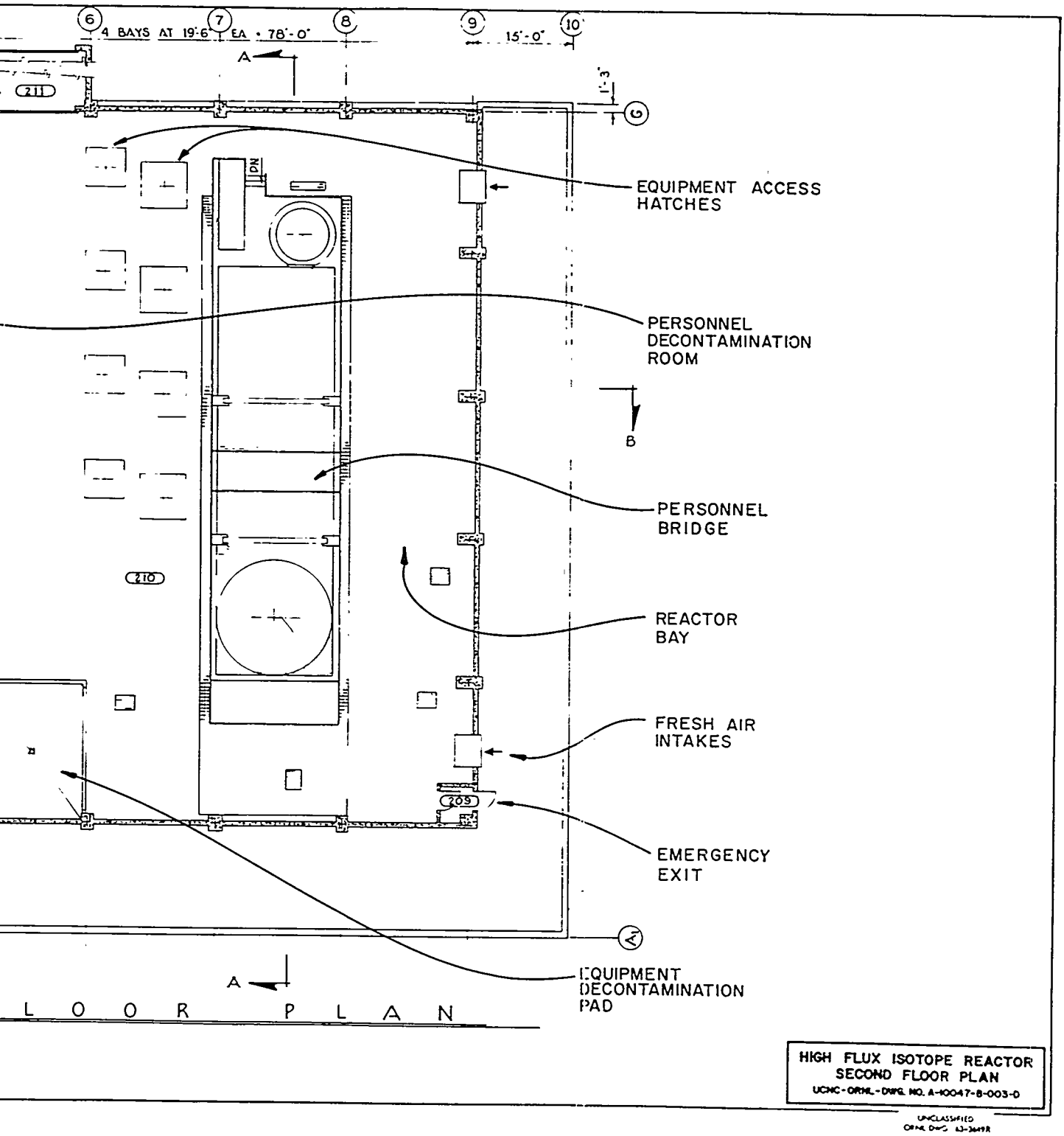

Fig. 3.2.3. Second-Floor Plan.

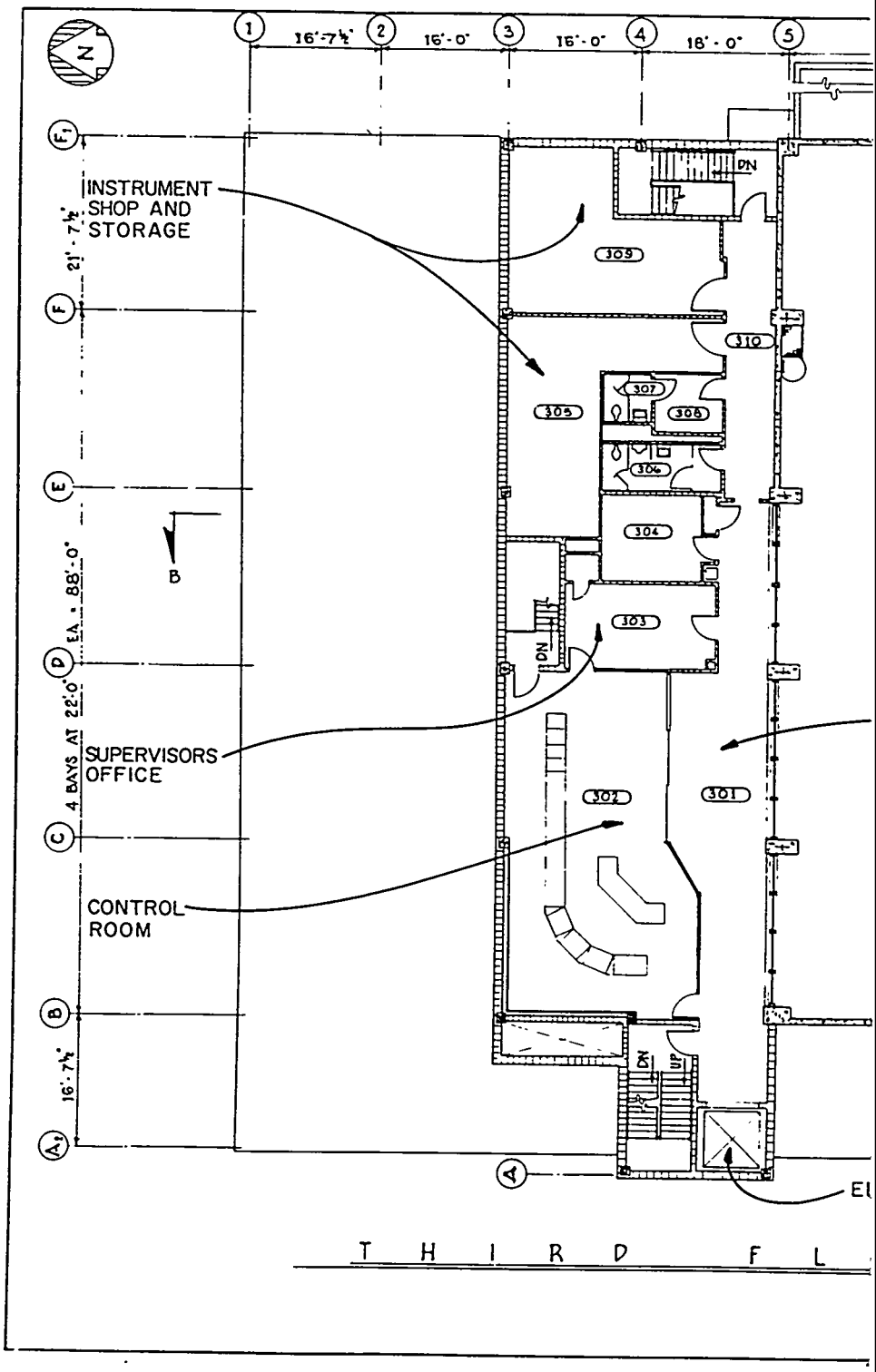
INSTRUMENT SHOP AND STORAGE
SUPERVISORS OFFICE
CONTROL ROOM
16'-7½"
16'-0"
16'-0"
18'-0"
21'-7½"
4 BAYS AT 22'-0" EA. = 88'-0"
16'-7½"
309
310
307
308
305
306
304
303
302
301
DN
UP
B
THIRD FL

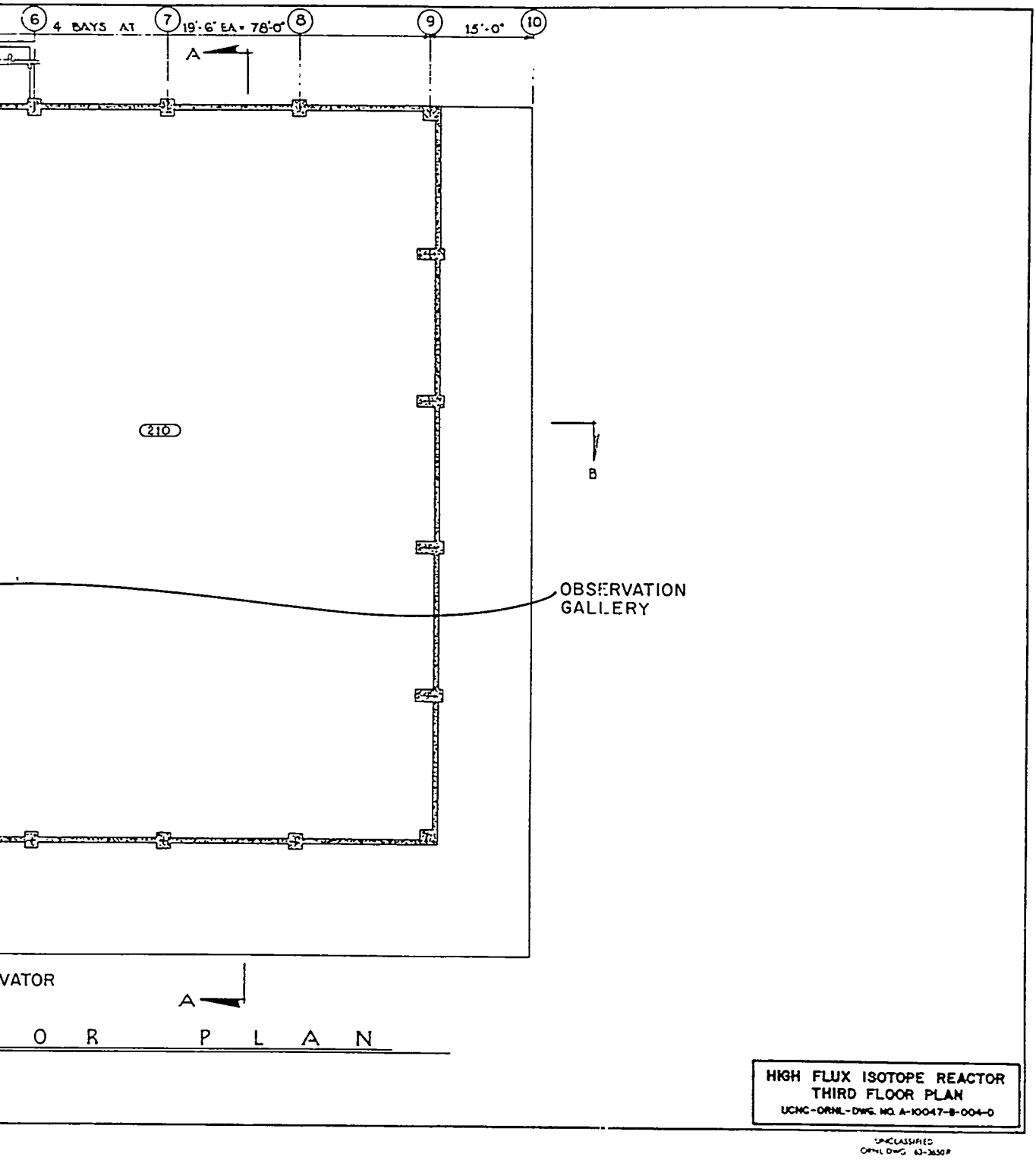

Fig. 3.2.4. Third-Floor Plan.

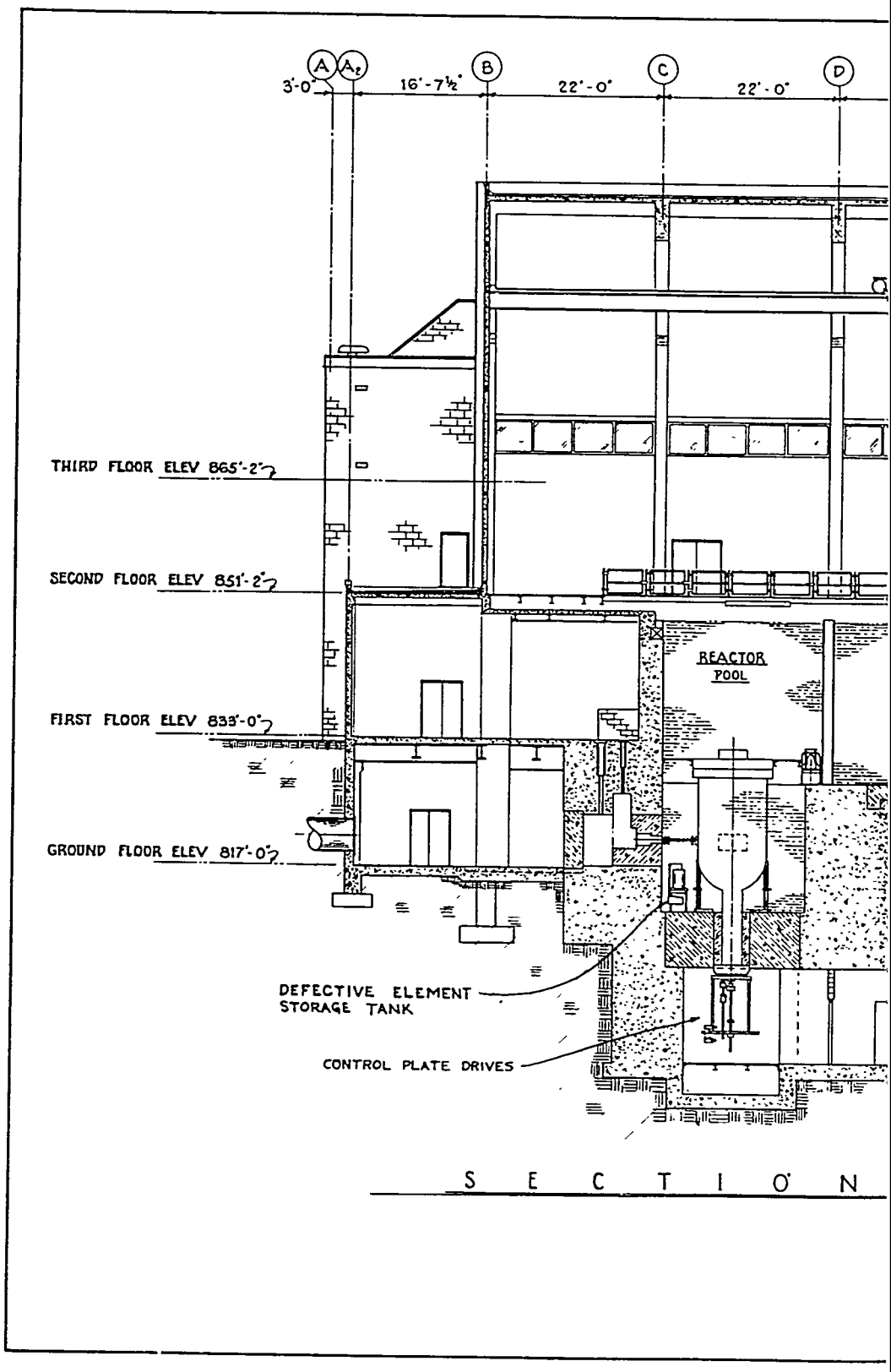
A
A2
B
C
D
3'-0"
16'-7½"
22'-0"
22'-0"
THIRD FLOOR ELEV 865'-2"
SECOND FLOOR ELEV 851'-2"
FIRST FLOOR ELEV 833'-0"
GROUND FLOOR ELEV 817'-0"
REACTOR POOL
DEFECTIVE ELEMENT STORAGE TANK
CONTROL PLATE DRIVES
S E C T I O N

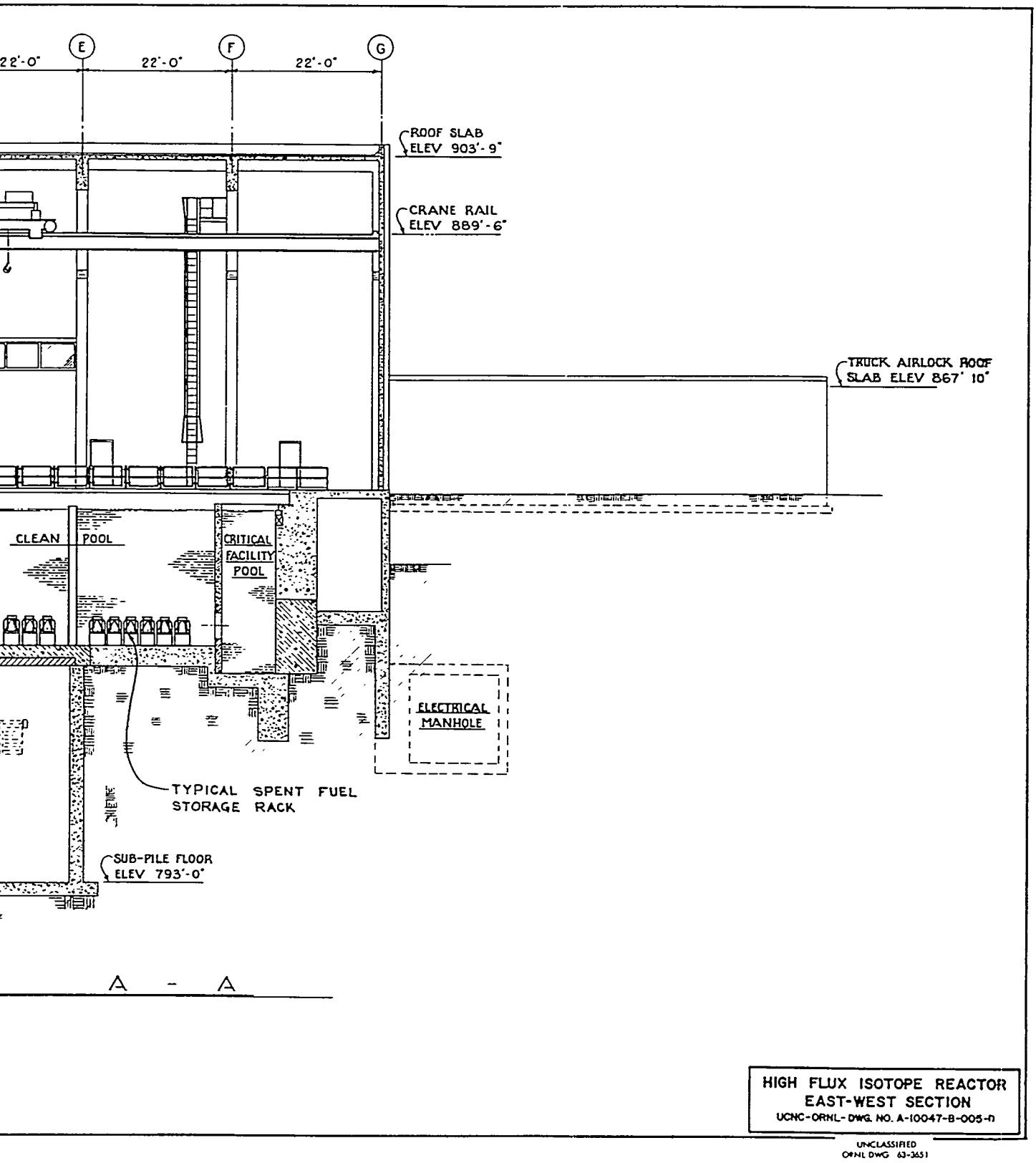

Fig. 3.2.5. East-West Section.

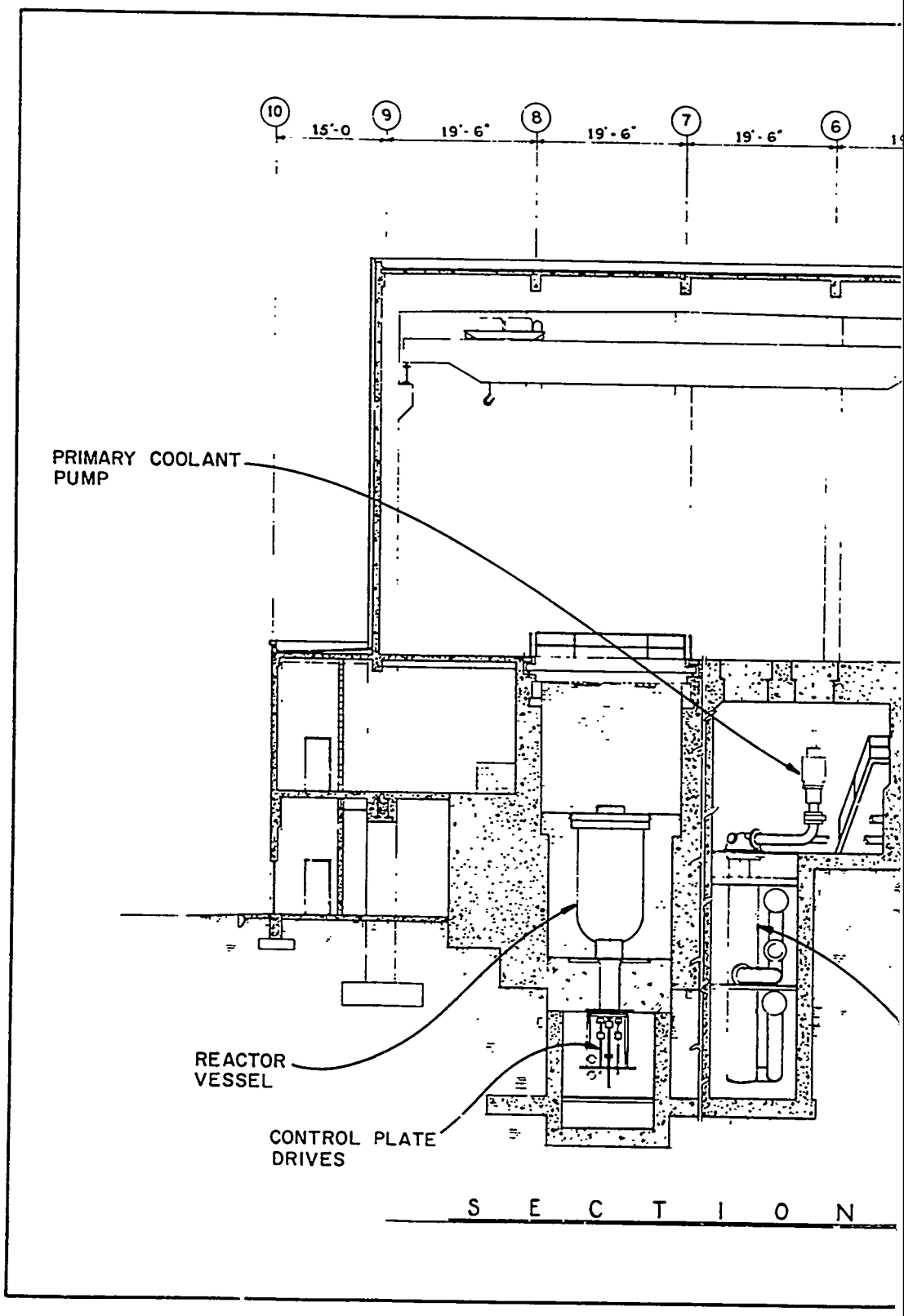
10
15'-0
9
19'-6"
8
19'-6"
7
19'-6"
6
PRIMARY COOLANT PUMP
REACTOR VESSEL
CONTROL PLATE DRIVES
S E C T I O N

F

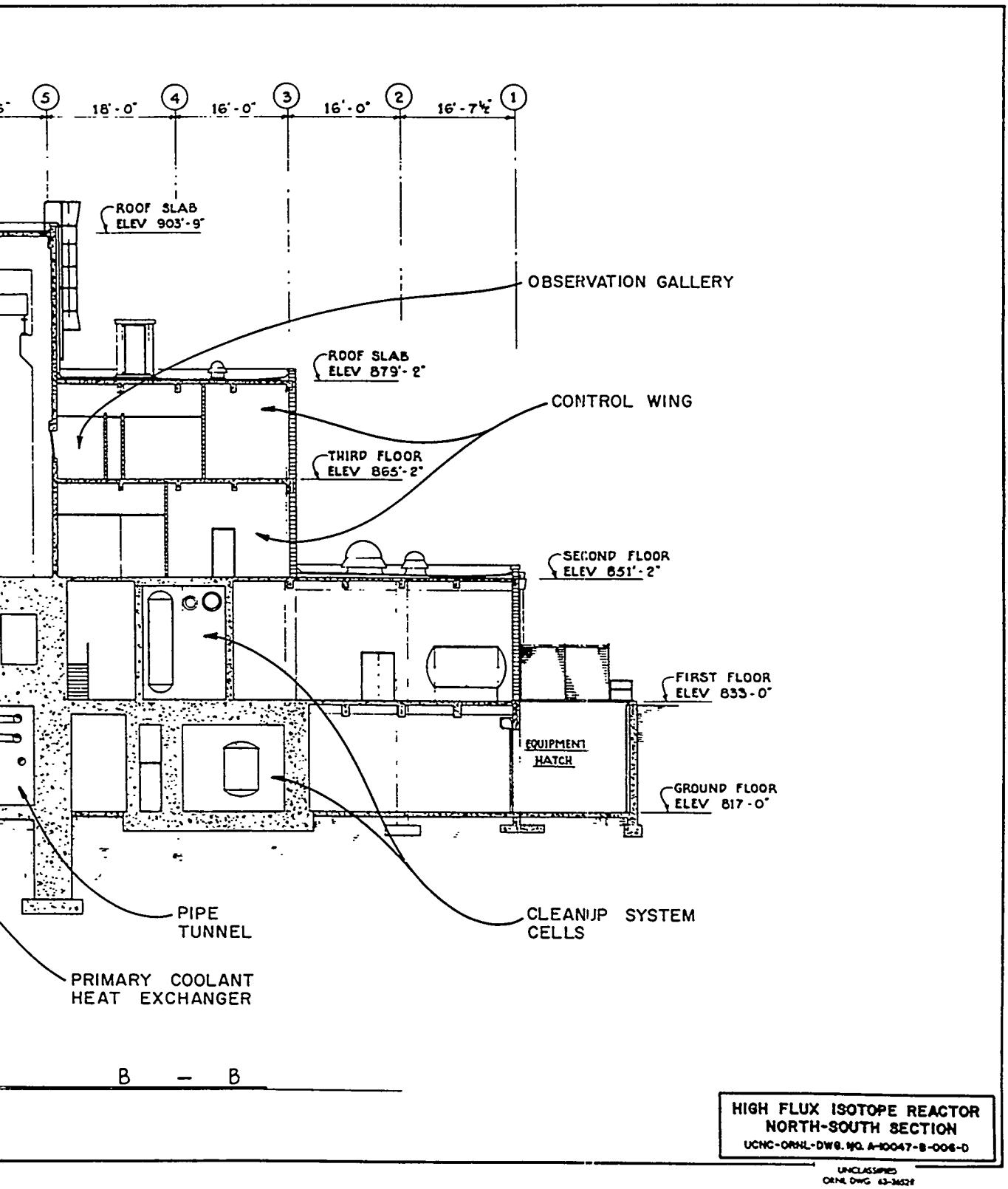

HIGH FLUX ISOTOPE REACTOR
NORTH-SOUTH SECTION
UCNC-ORNL-DWG. NO. A-10047-B-006-D

UNCLASSIFIED
ORNL DWG 63-3652R

. 3.2.6. North-South Section.

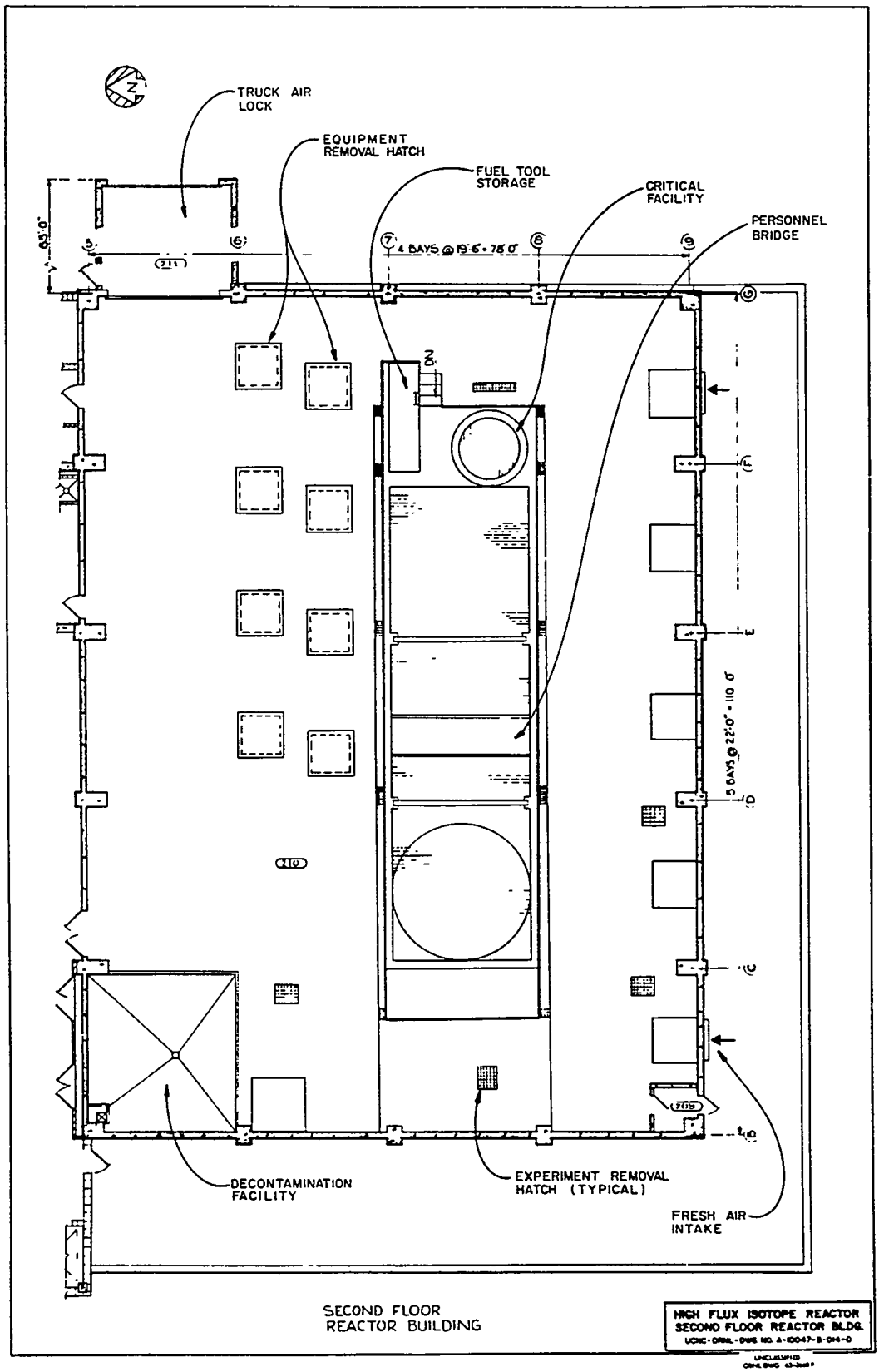

Fig. 3.3.1. Second Floor of Reactor Building.

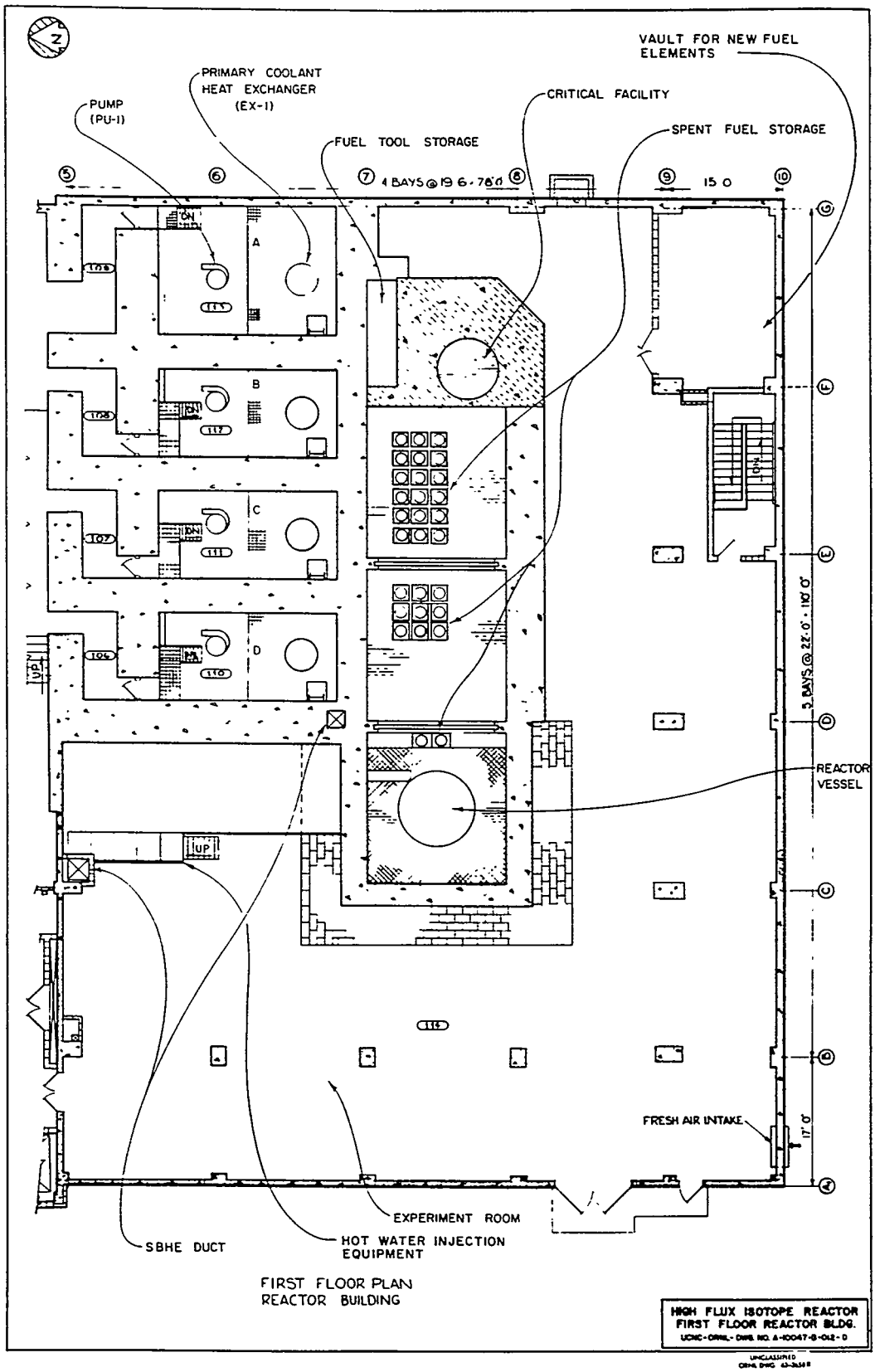

Fig. 3.3.2. First Floor of Reactor Building.

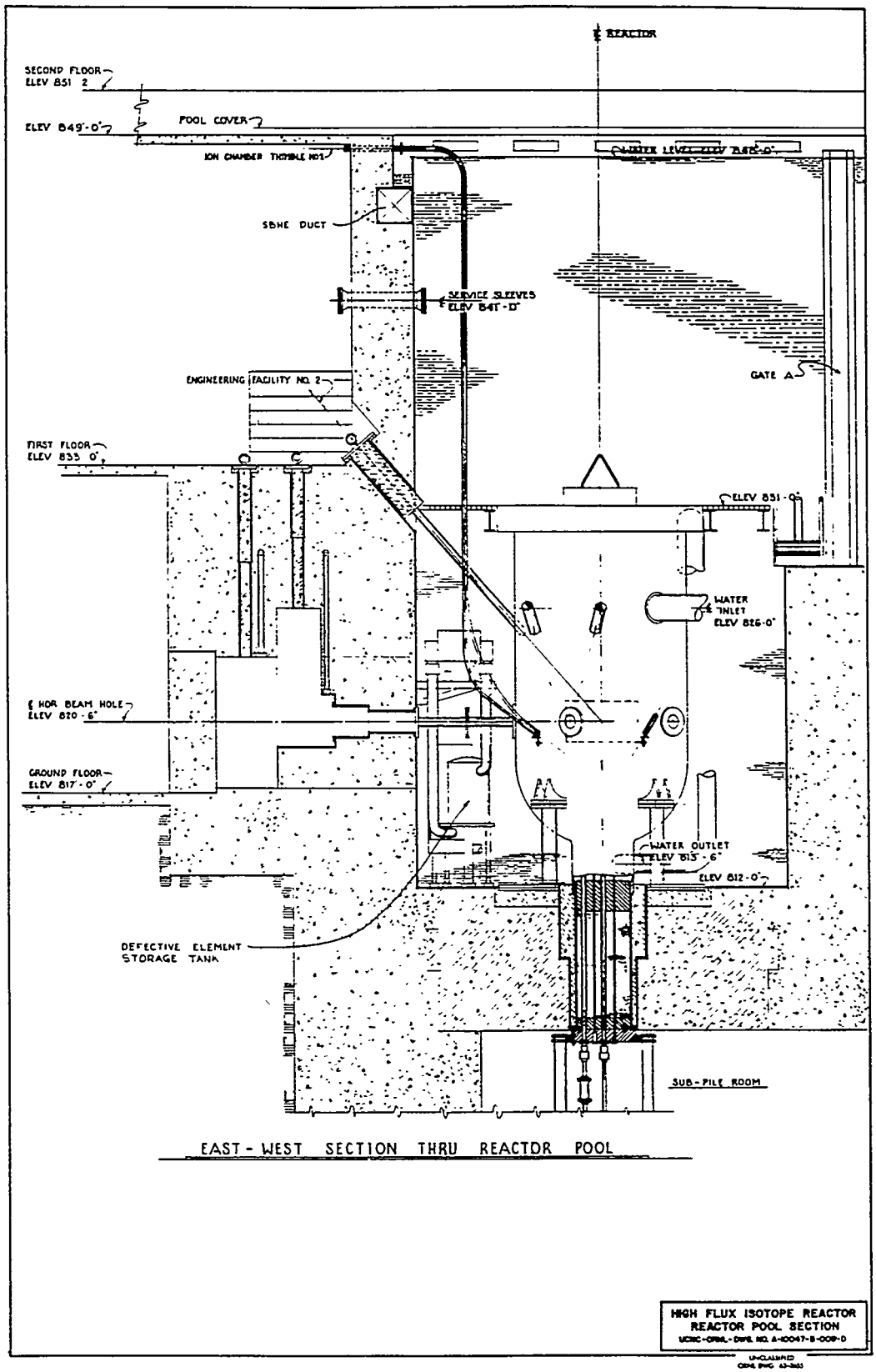

Fig. 3.3.3. Reactor Pool, East-West Section.

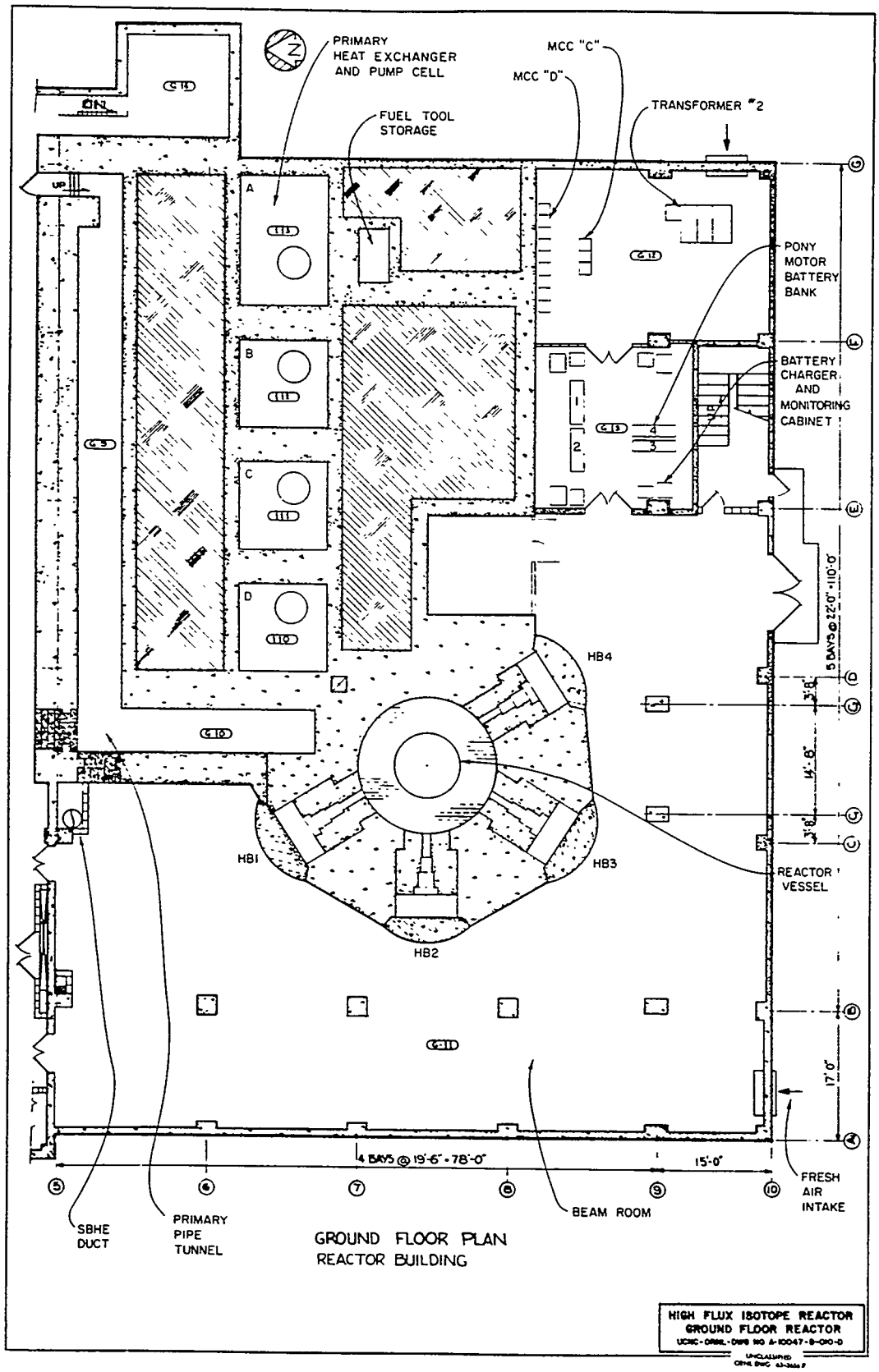

Fig. 3.3.4. Ground Floor of Reactor Building.

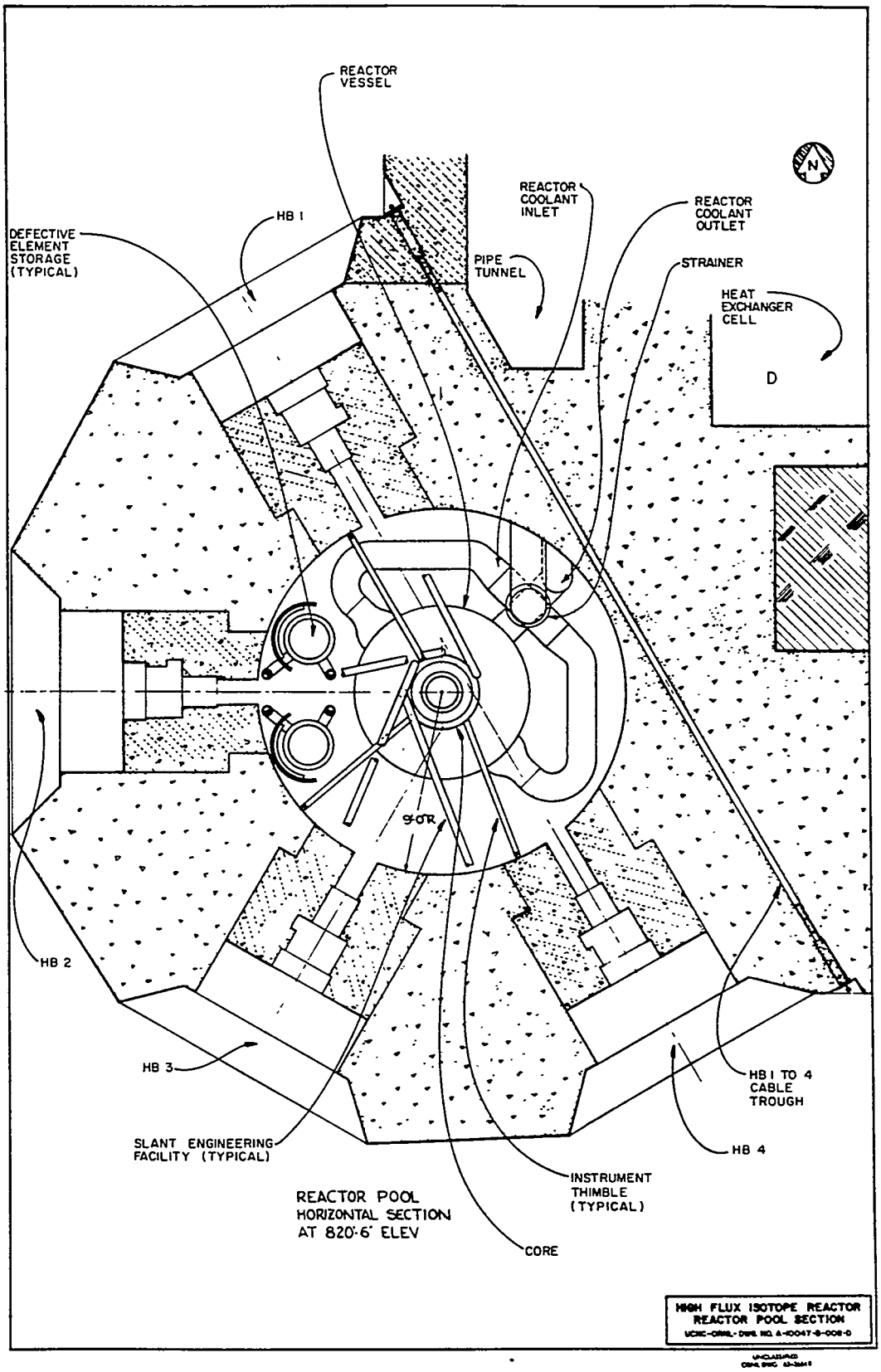

Fig. 3.3.5. Reactor Pool, Horizontal Section.

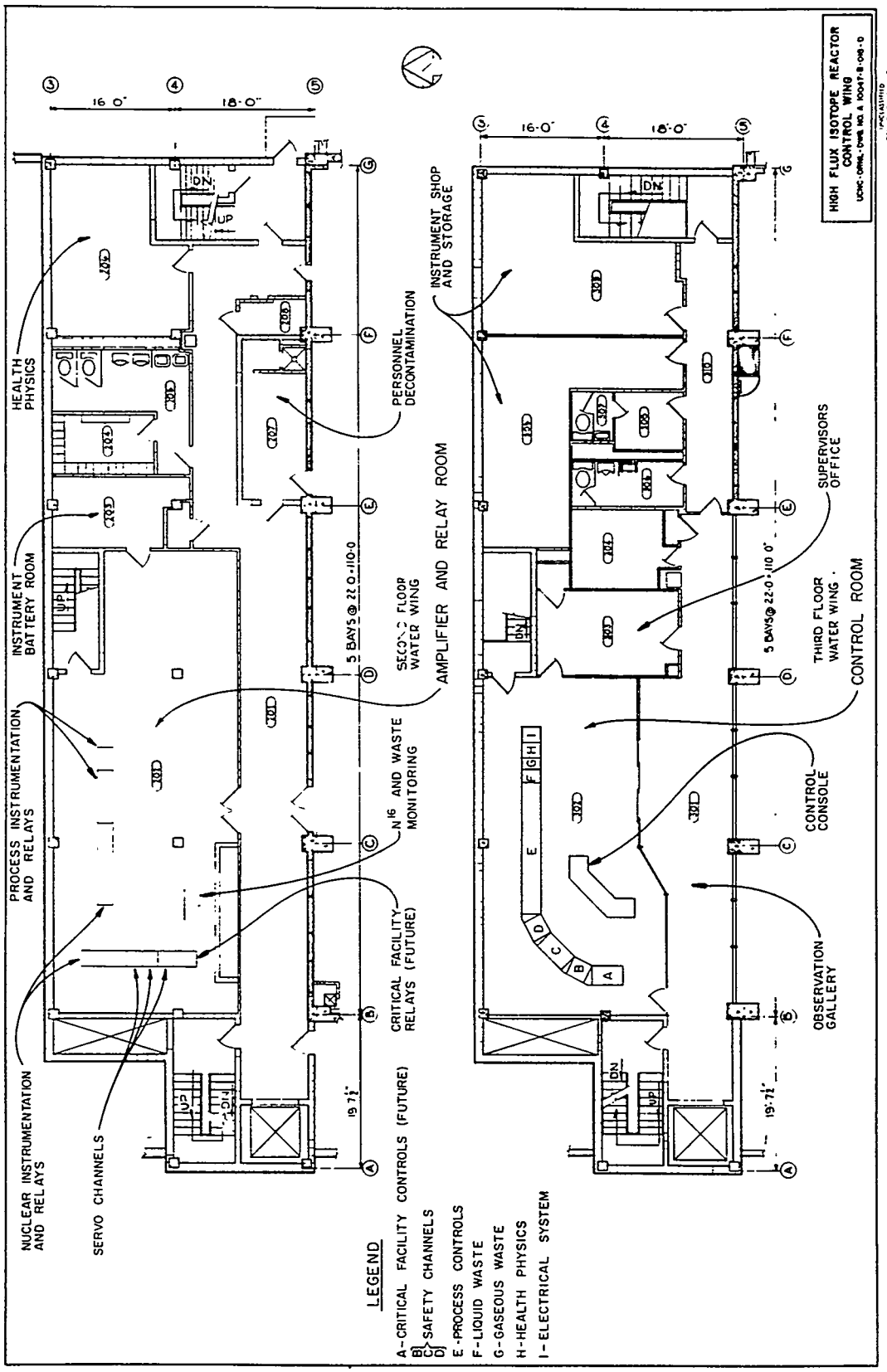

Fig. 3.4.1. Control Wing.

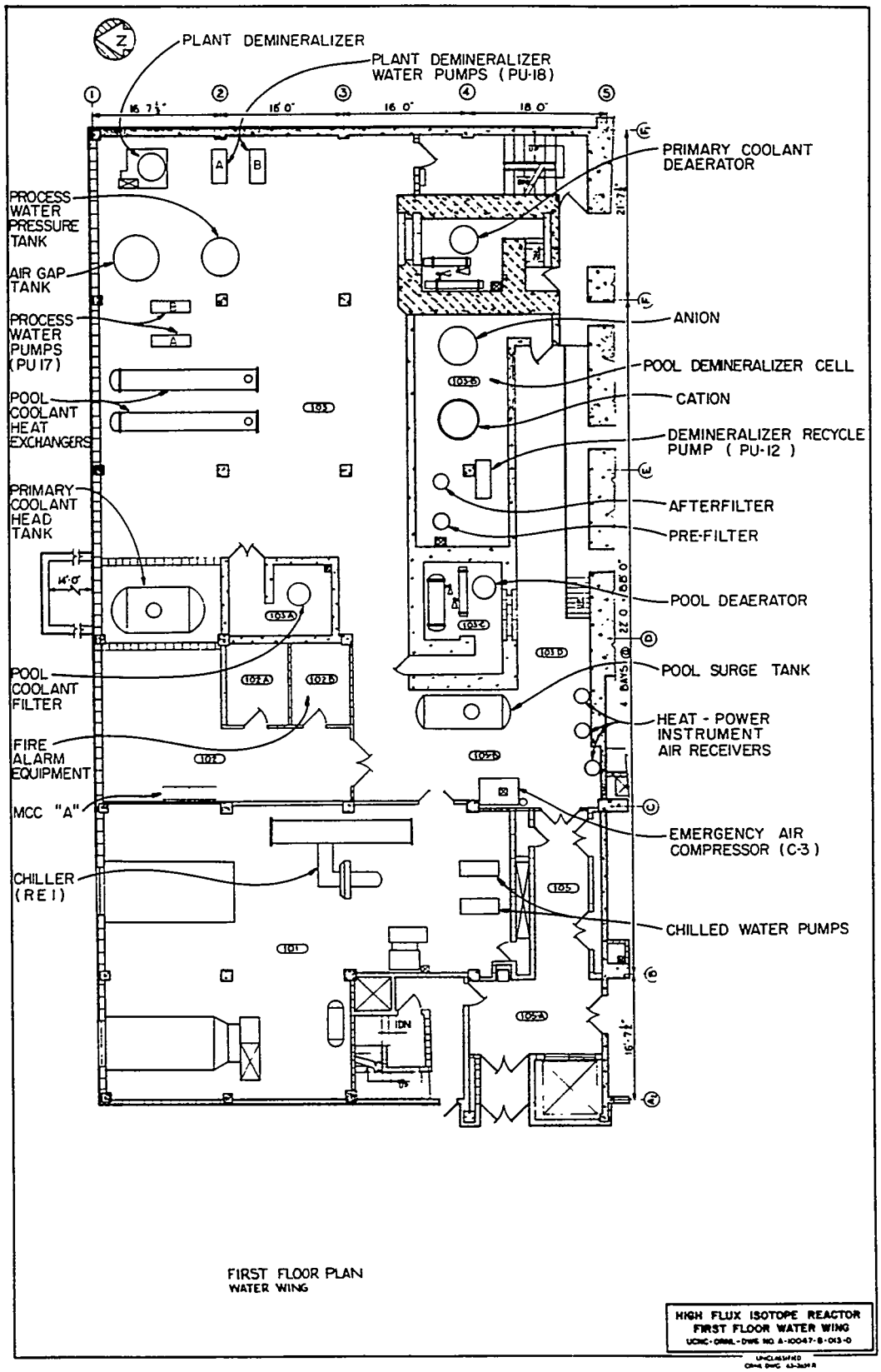

Fig. 3.4.2. First Floor of Water Wing.

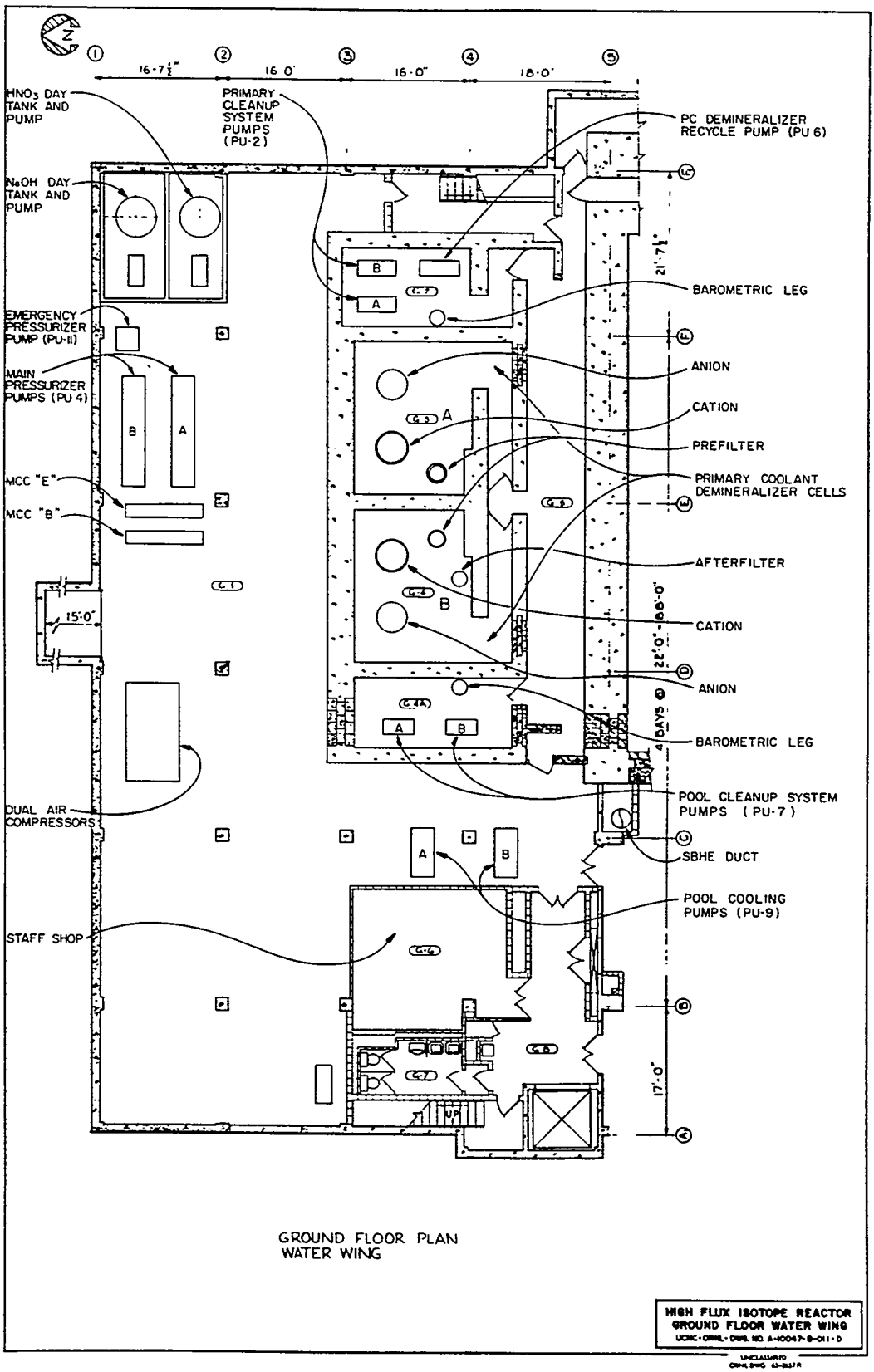

Fig. 3.4.3. Ground Floor of Water Wing.

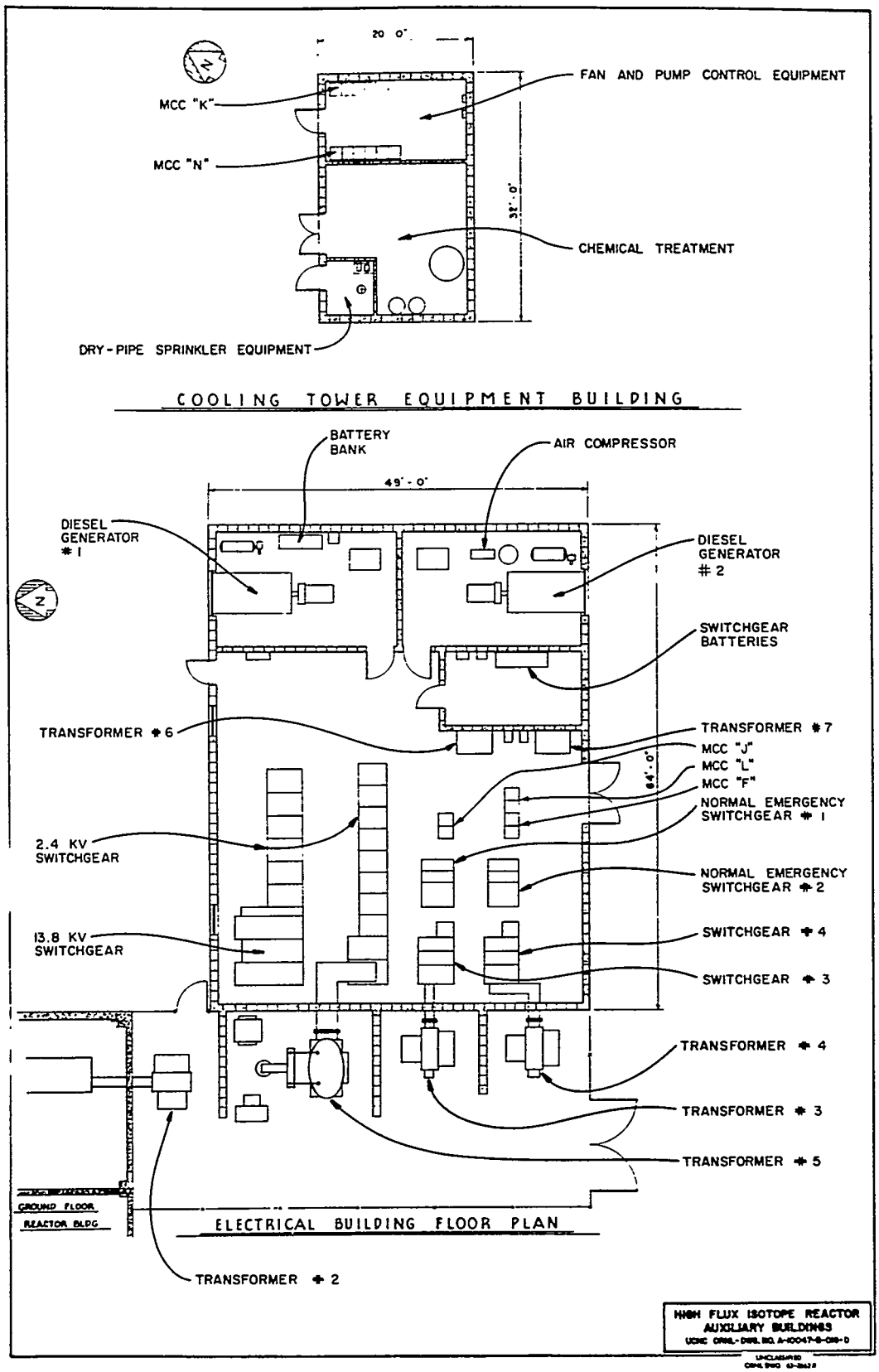

Fig. 3.5.1. Auxiliary Buildings.

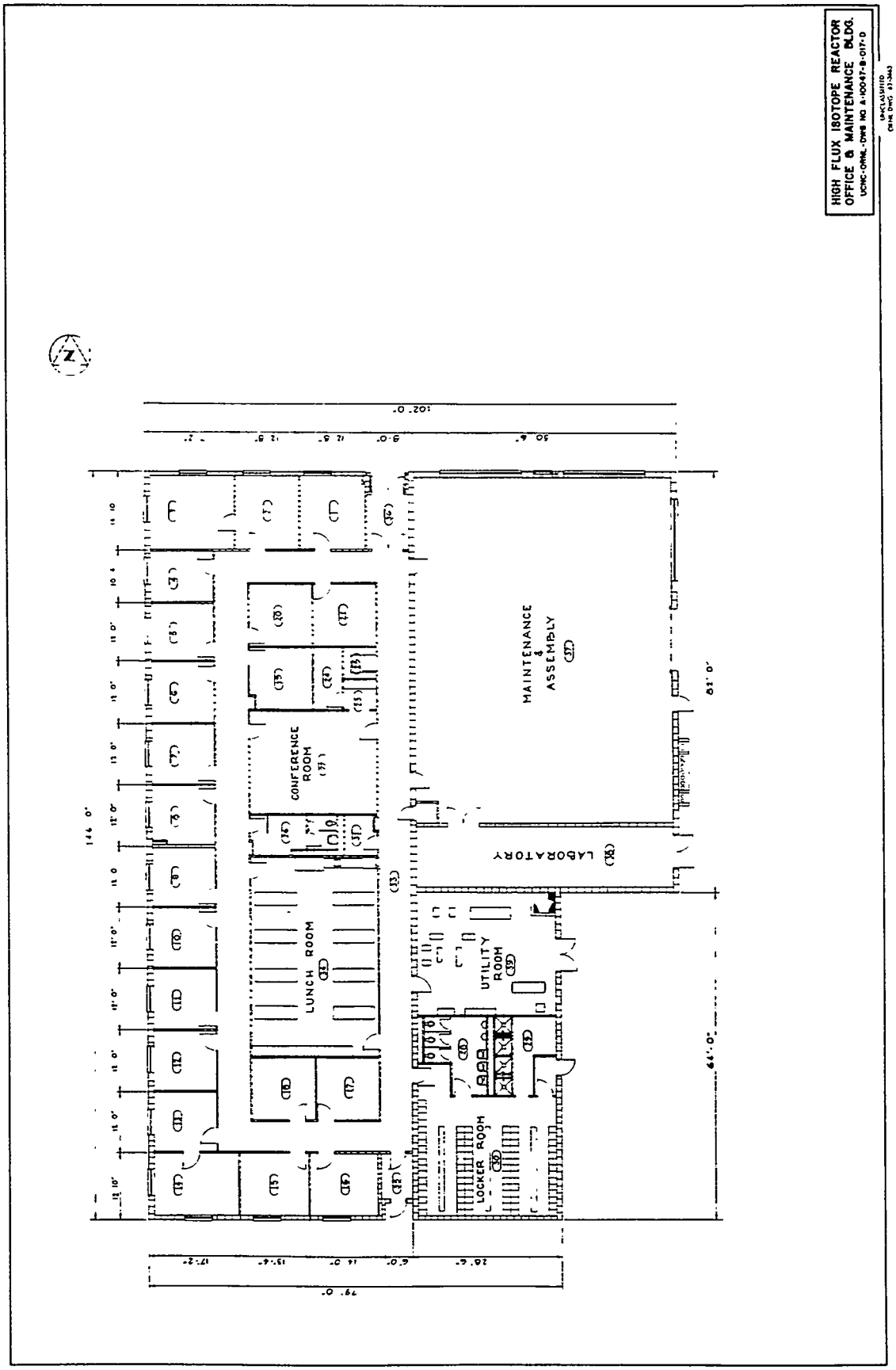

Fig. 3.5.2. Office and Maintenance Buildings.

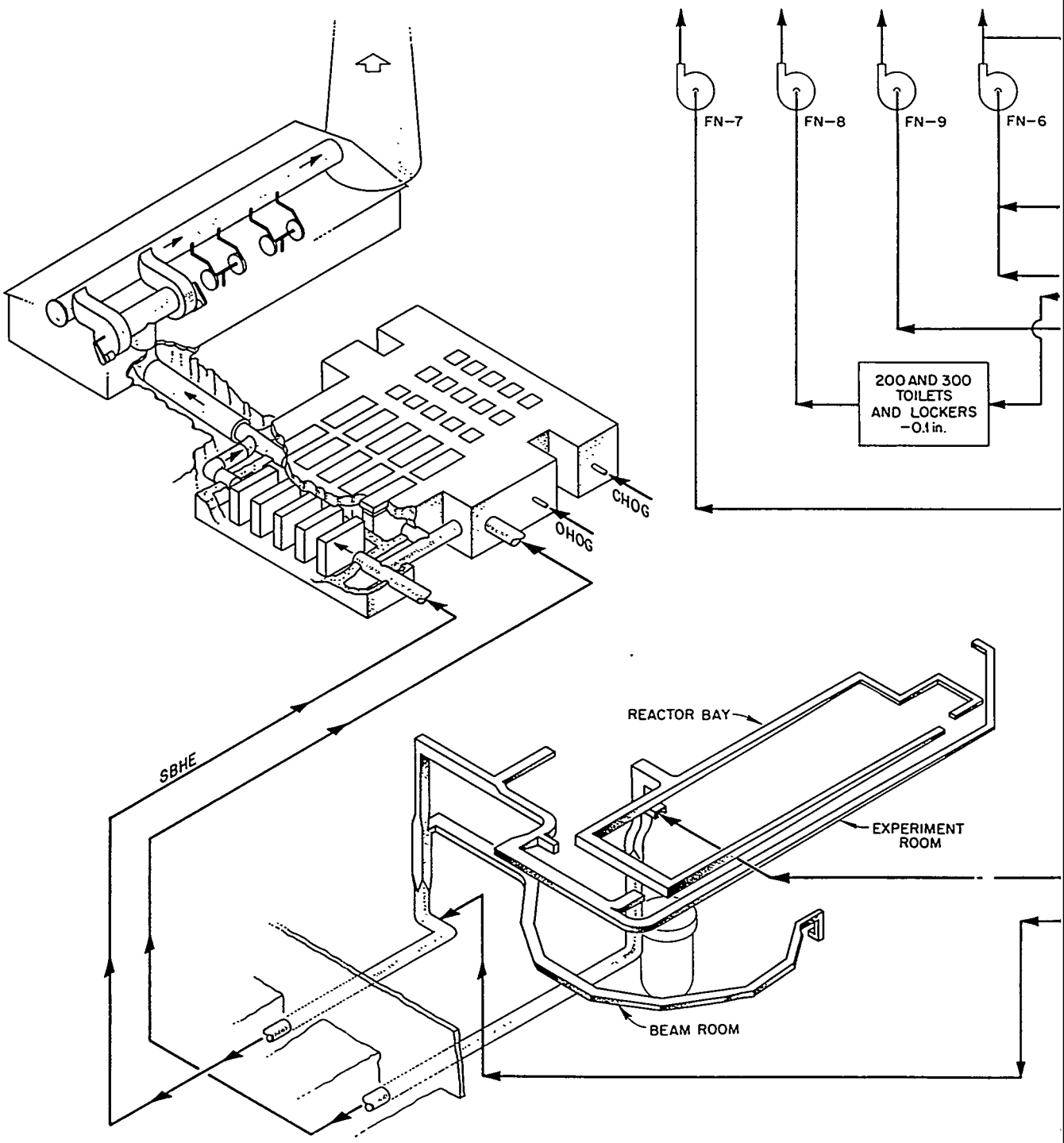
FN-7
FN-8
FN-9
FN-6
200 AND 300
TOILETS
AND LOCKERS
-0.1 in.
CHOG
OHOG
SBHE
REACTOR BAY
EXPERIMENT
ROOM
BEAM ROOM

Fig. 4.1.1.

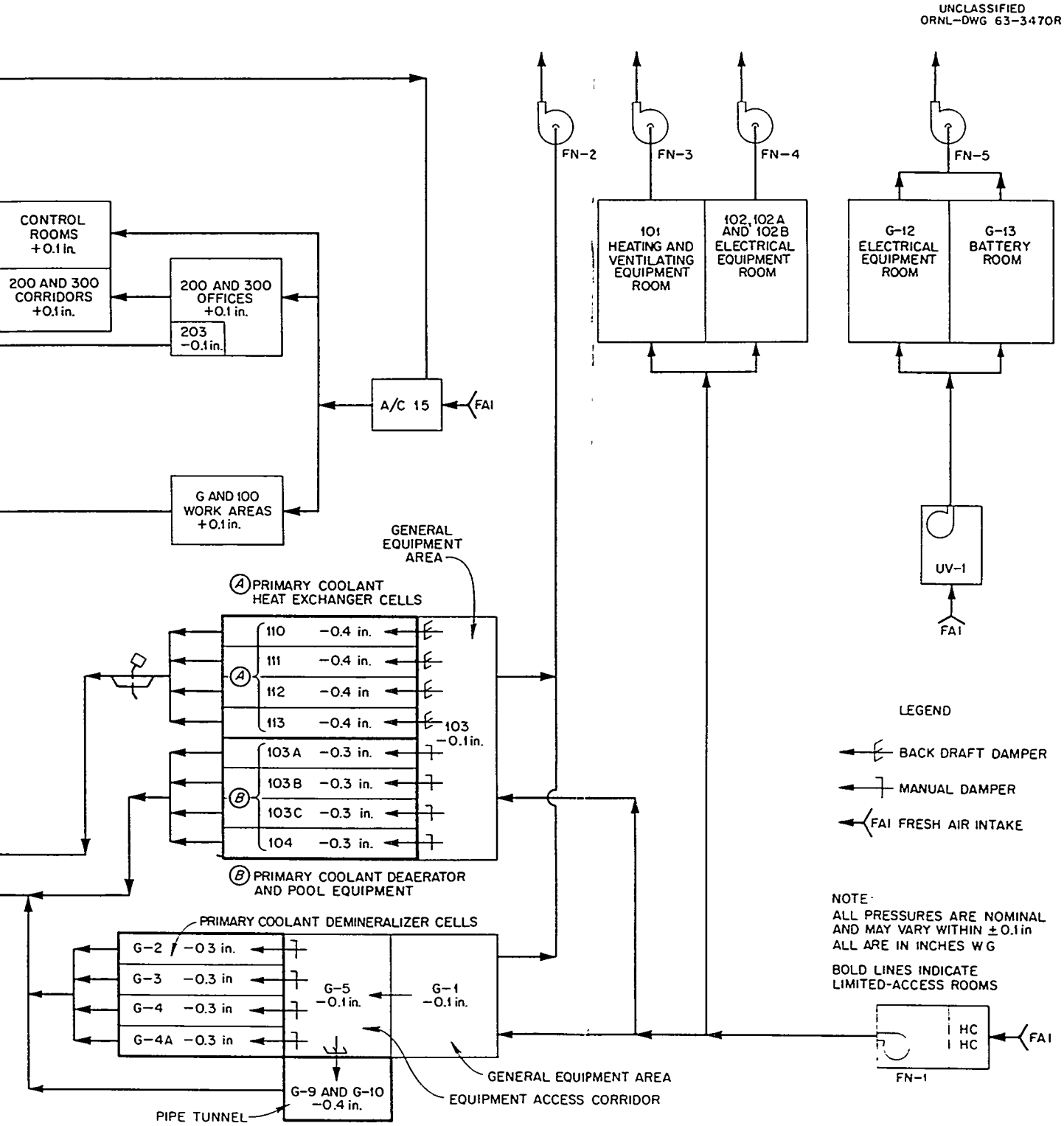

ster Airflow Diagram.

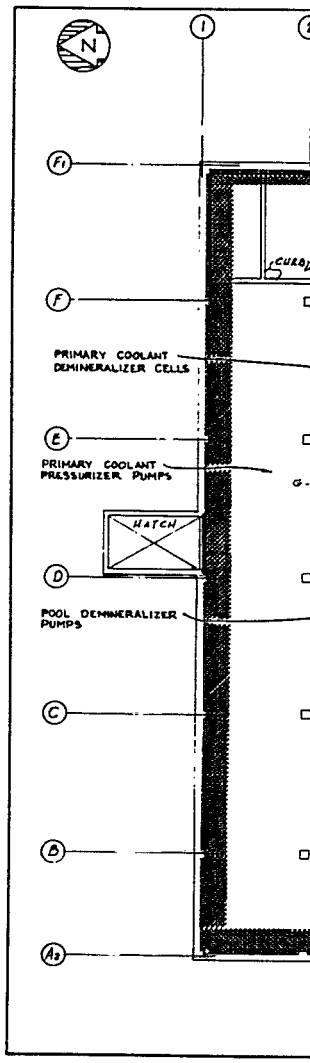
N
1
F1
F
PRIMARY COOLANT DEMINERALIZER CELLS
E
PRIMARY COOLANT PRESSURIZER PUMPS
HATCH
D
POOL DEMINERALIZER PUMPS
C
B
A2

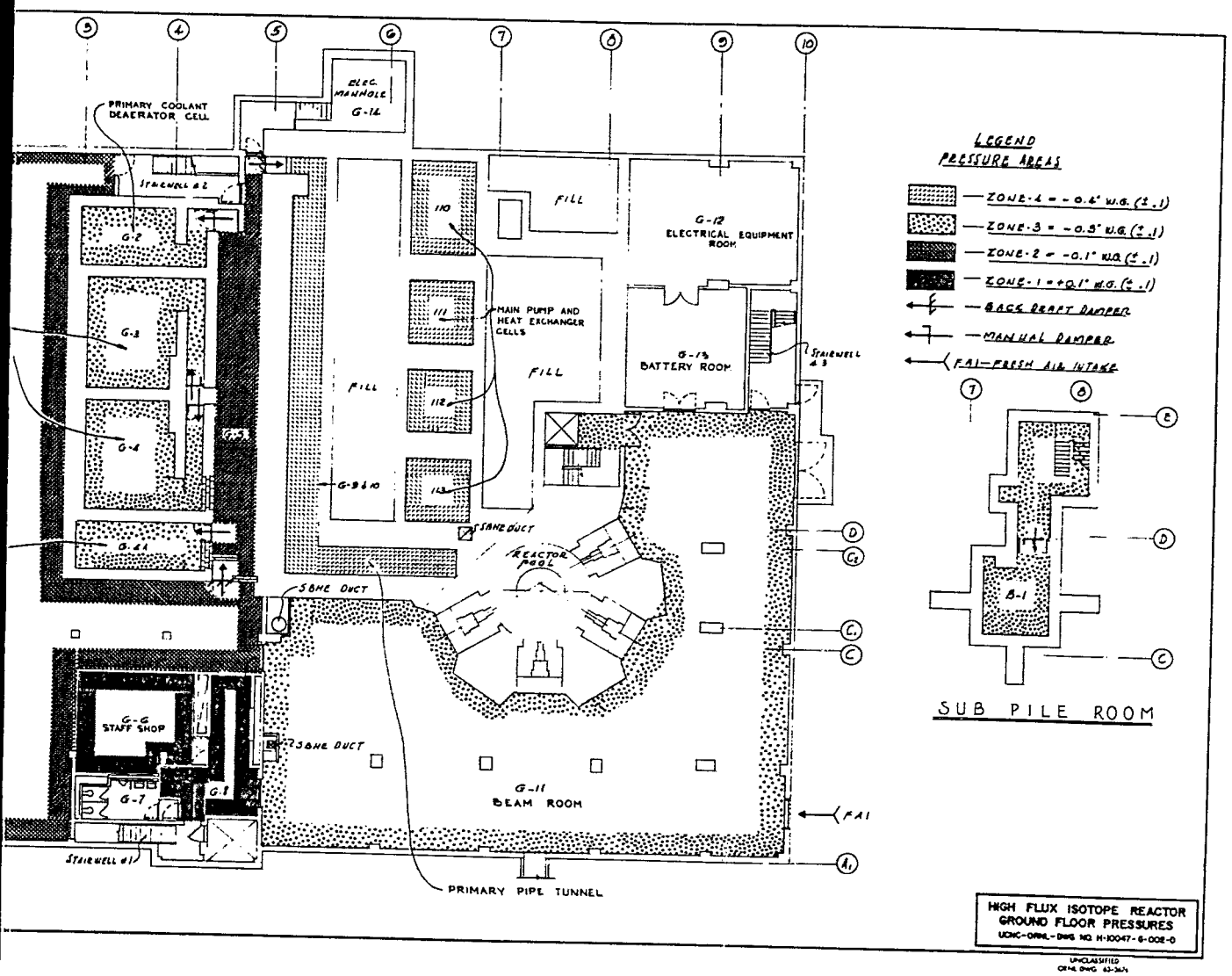

Fig. 4.2.1. Ground-Floor Pressures.

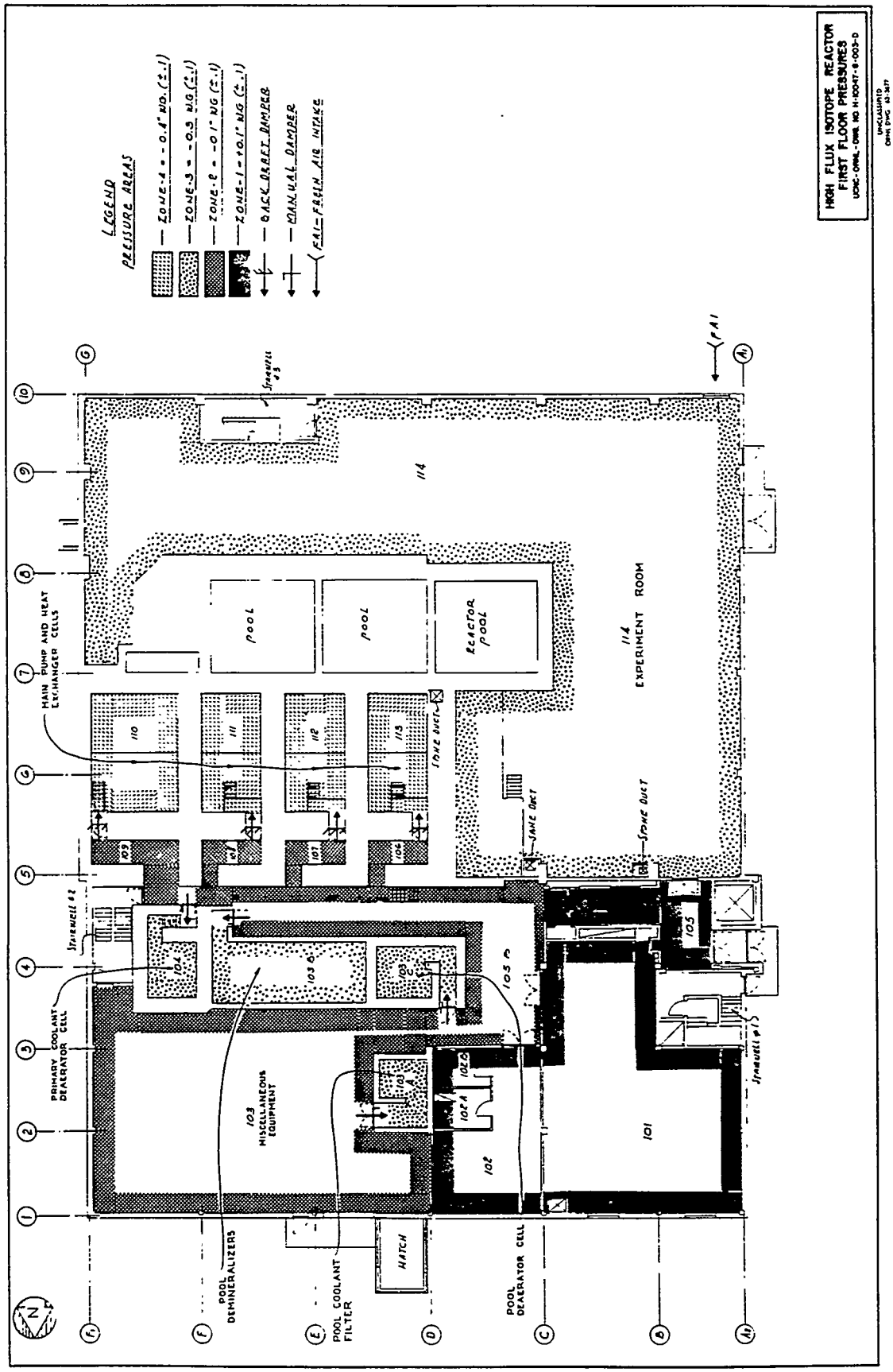

Fig. 4.2.2. First-Floor Pressures.

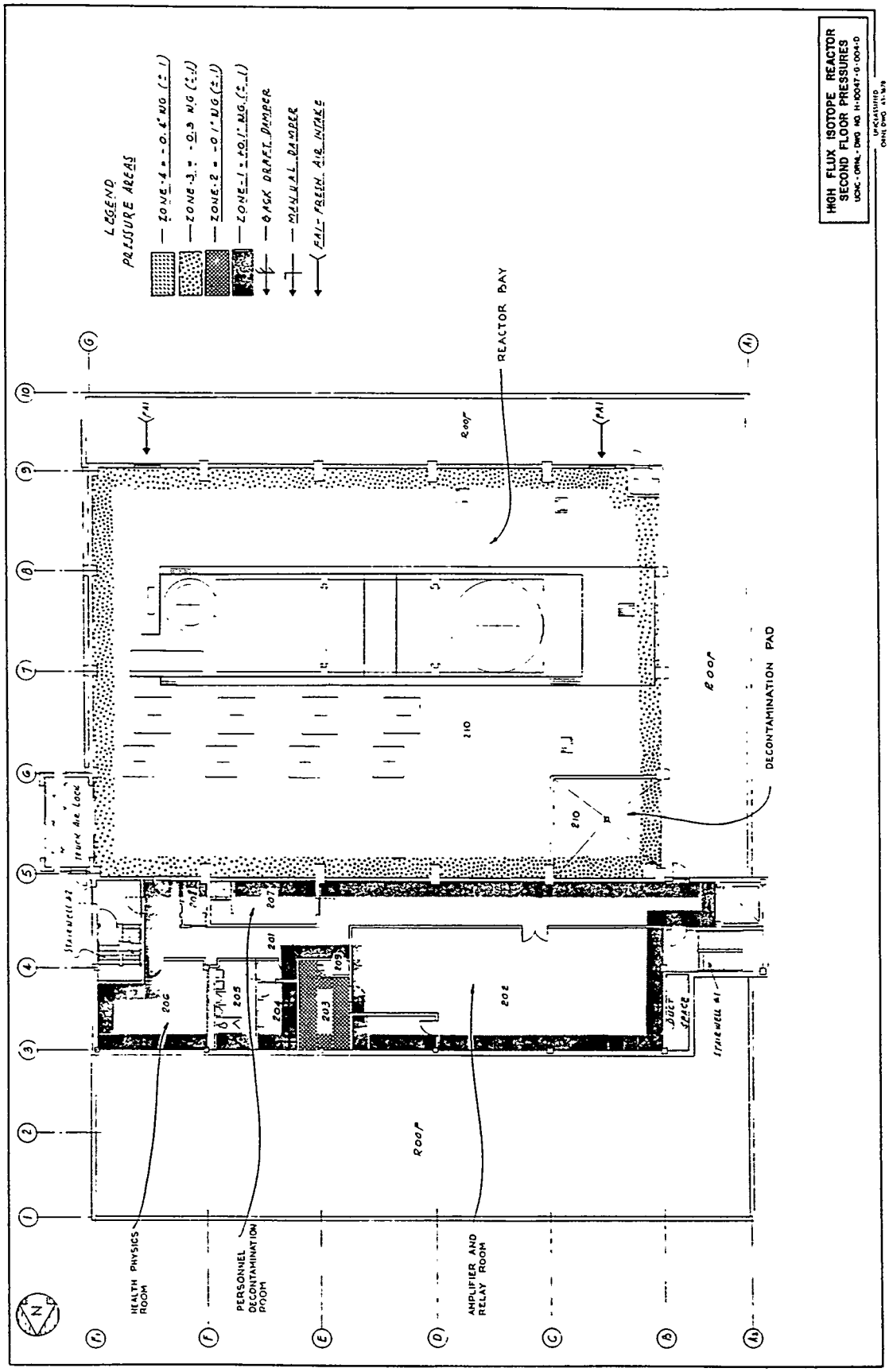

Fig. 4.2.3. Second-Floor Pressures.

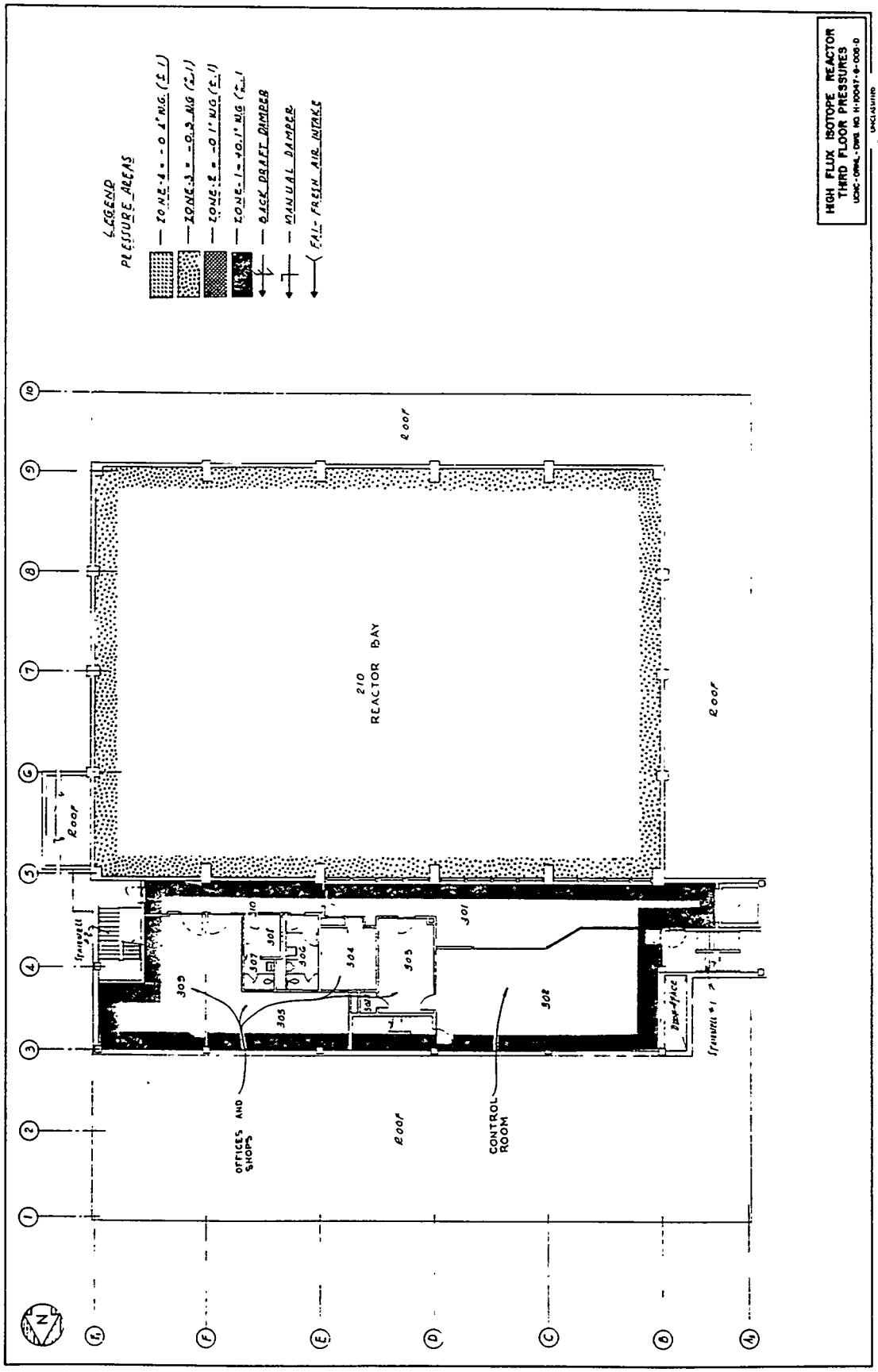

Fig. 4.2.4. Third-Floor Pressures.

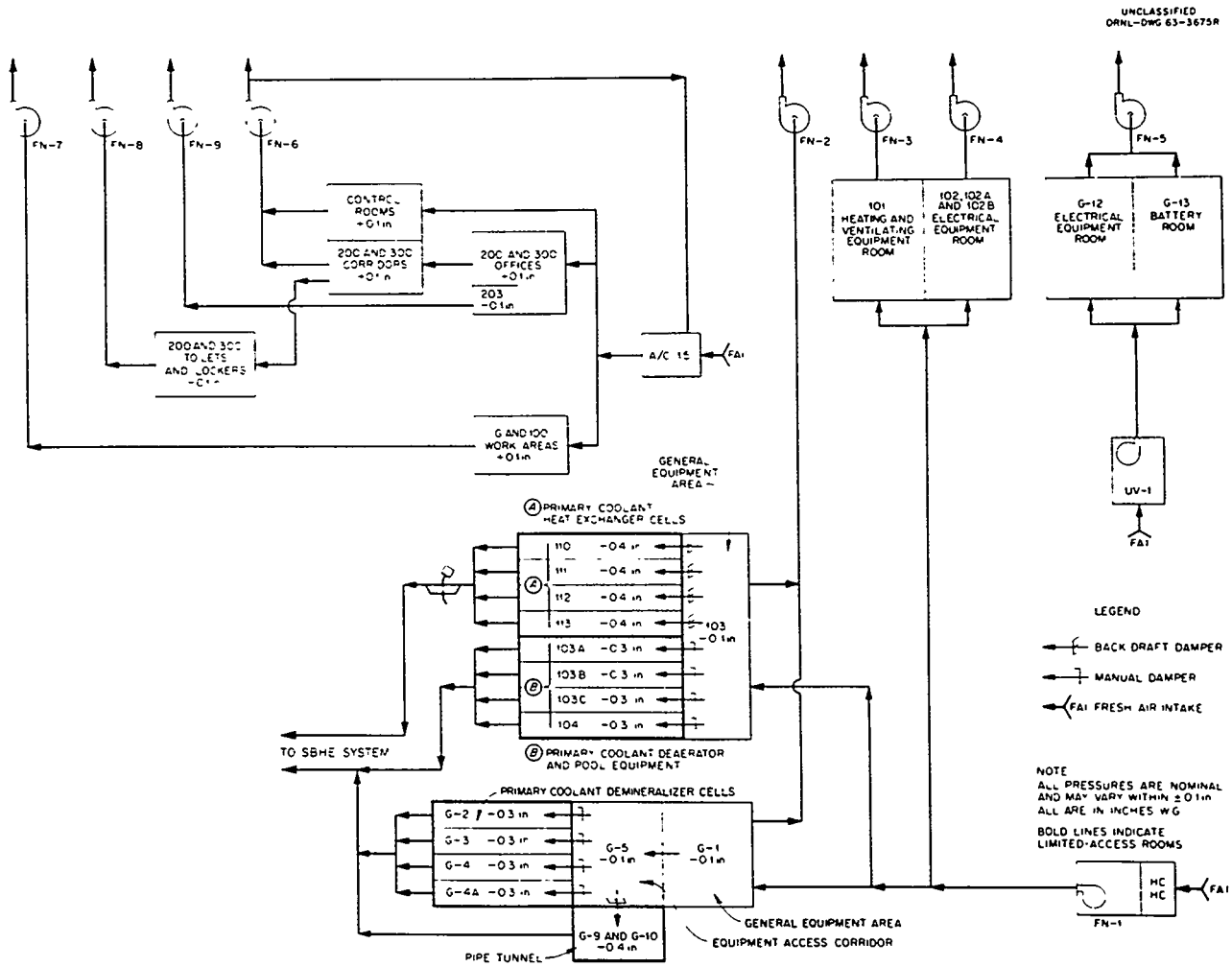

Fig. 4.4.1. Airflow Diagram.

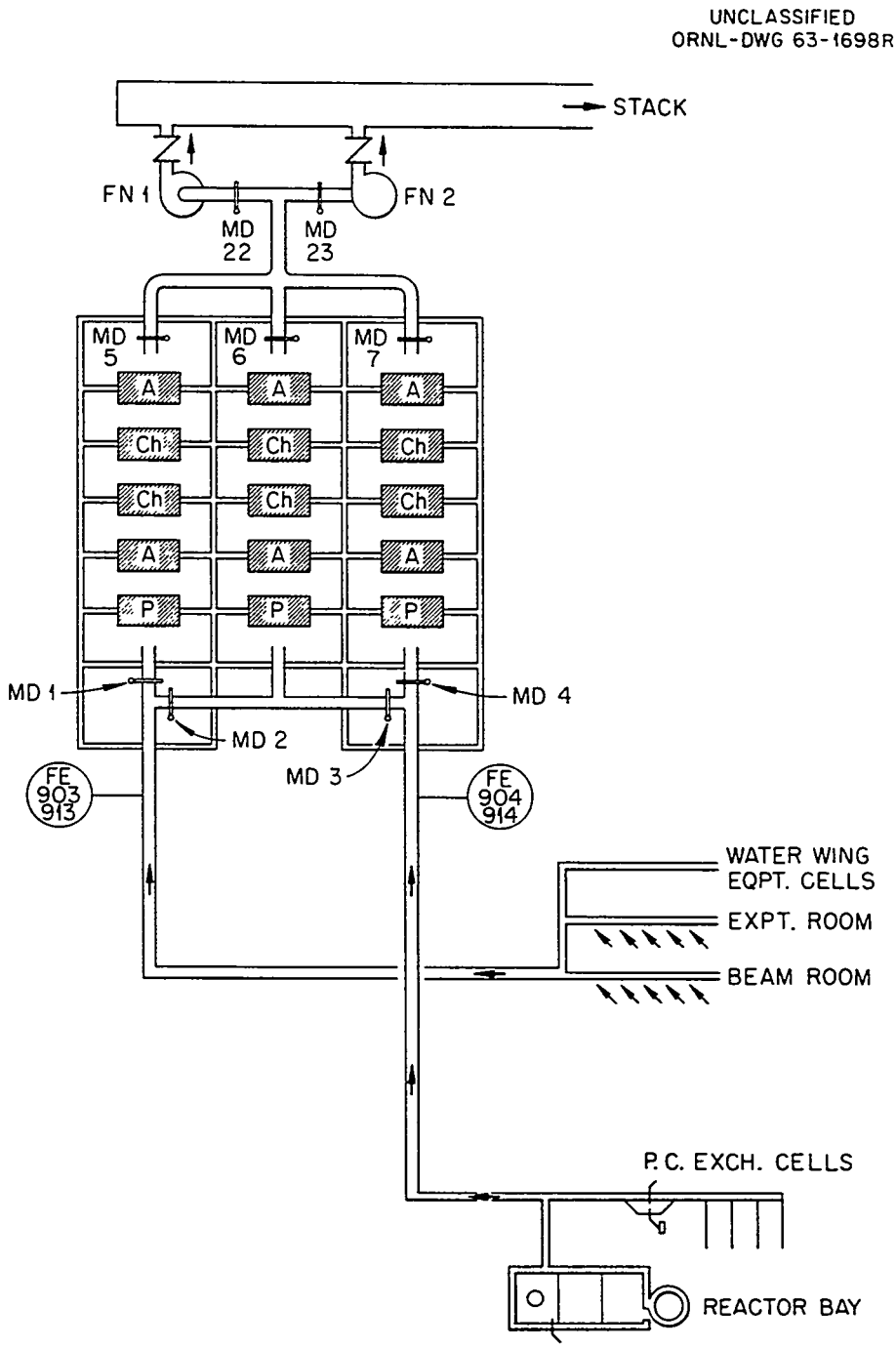

Fig. 4.5.1. Special Building Hot Exhaust System.

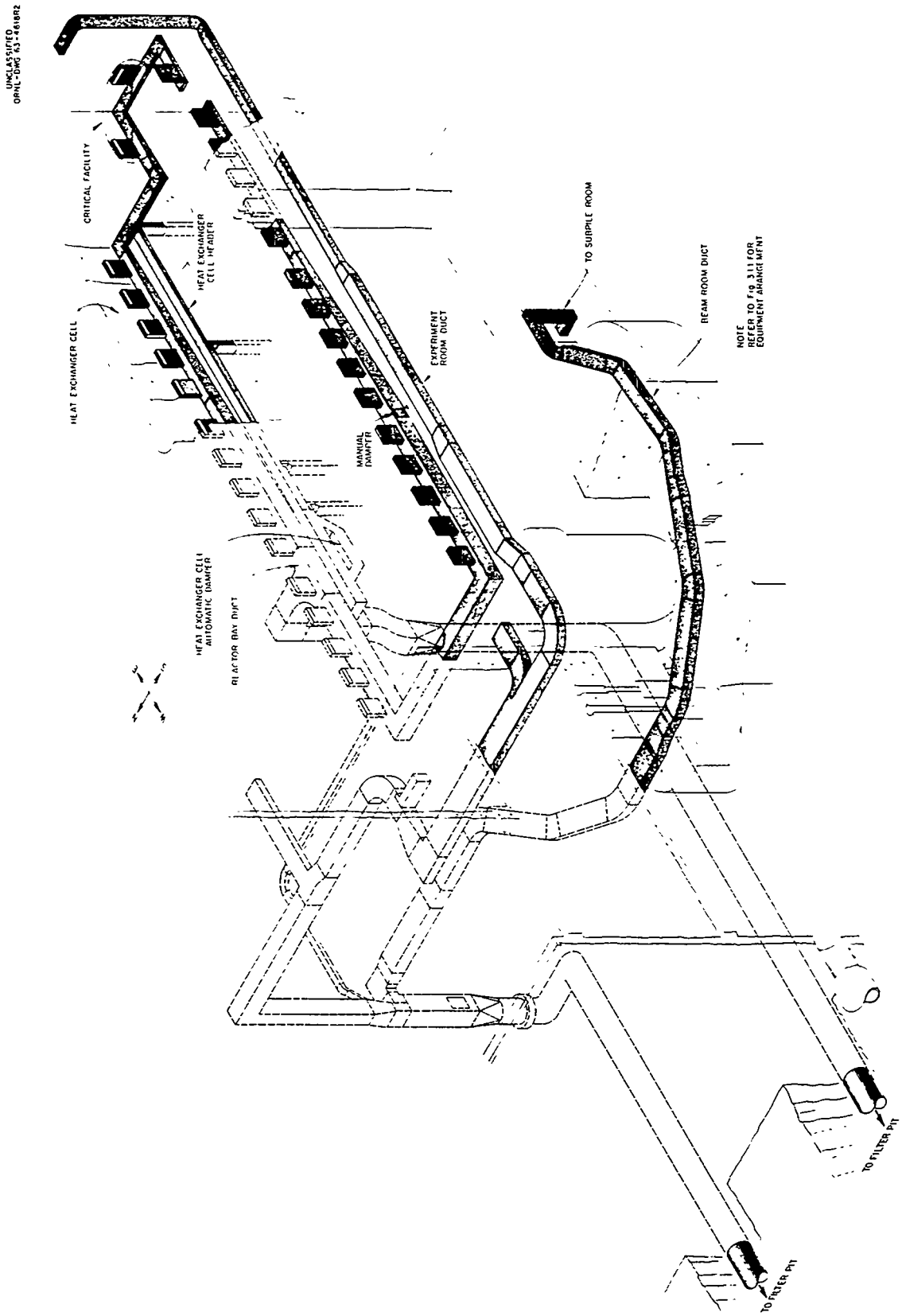

Fig. 4.5.2. Isometric of SBHE Ducts in Reactor Building.

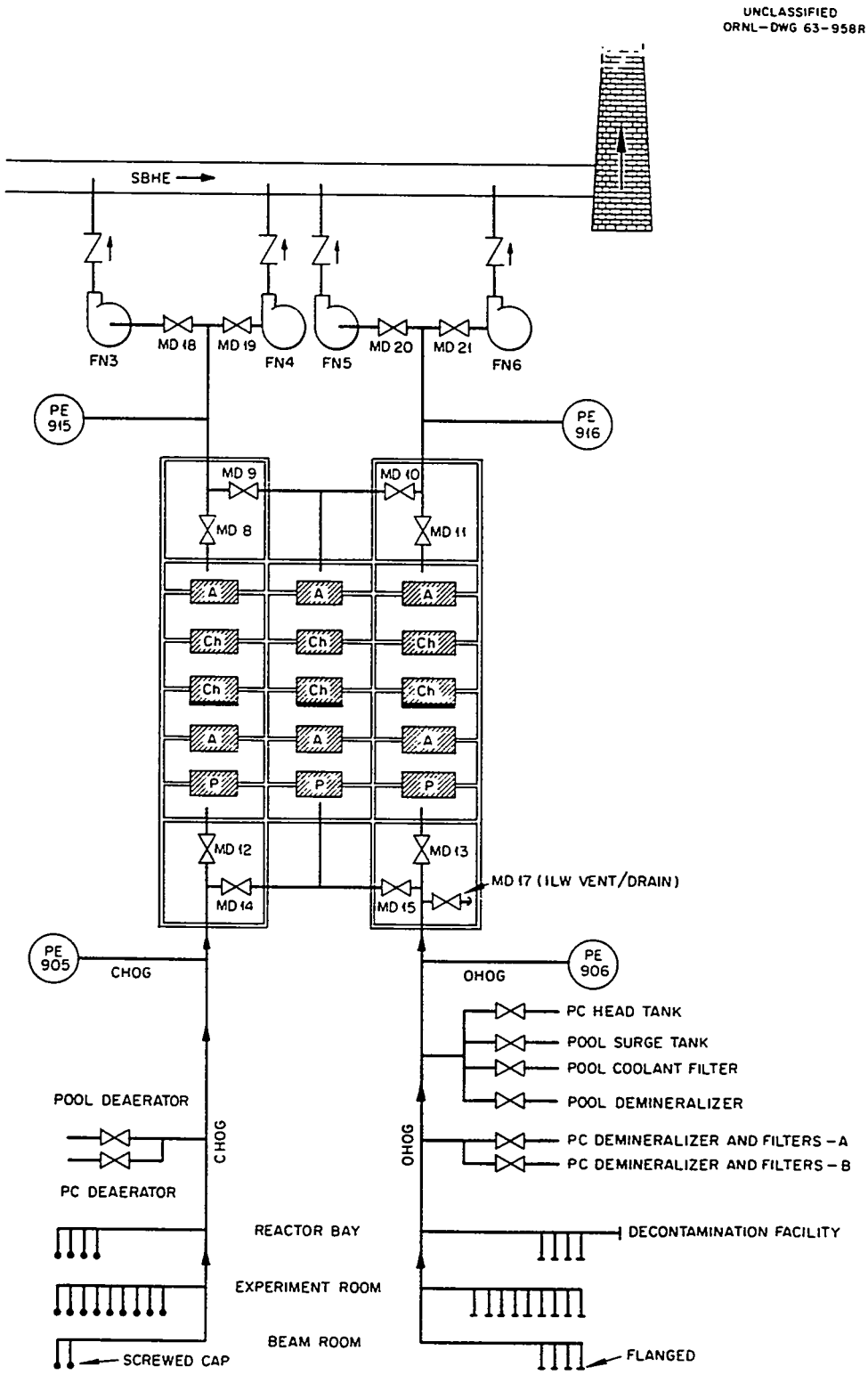

Fig. 4.6.1. Hot Off-Gas System.

UNCLASSIFIED
ORNL LR DWG 77790R2

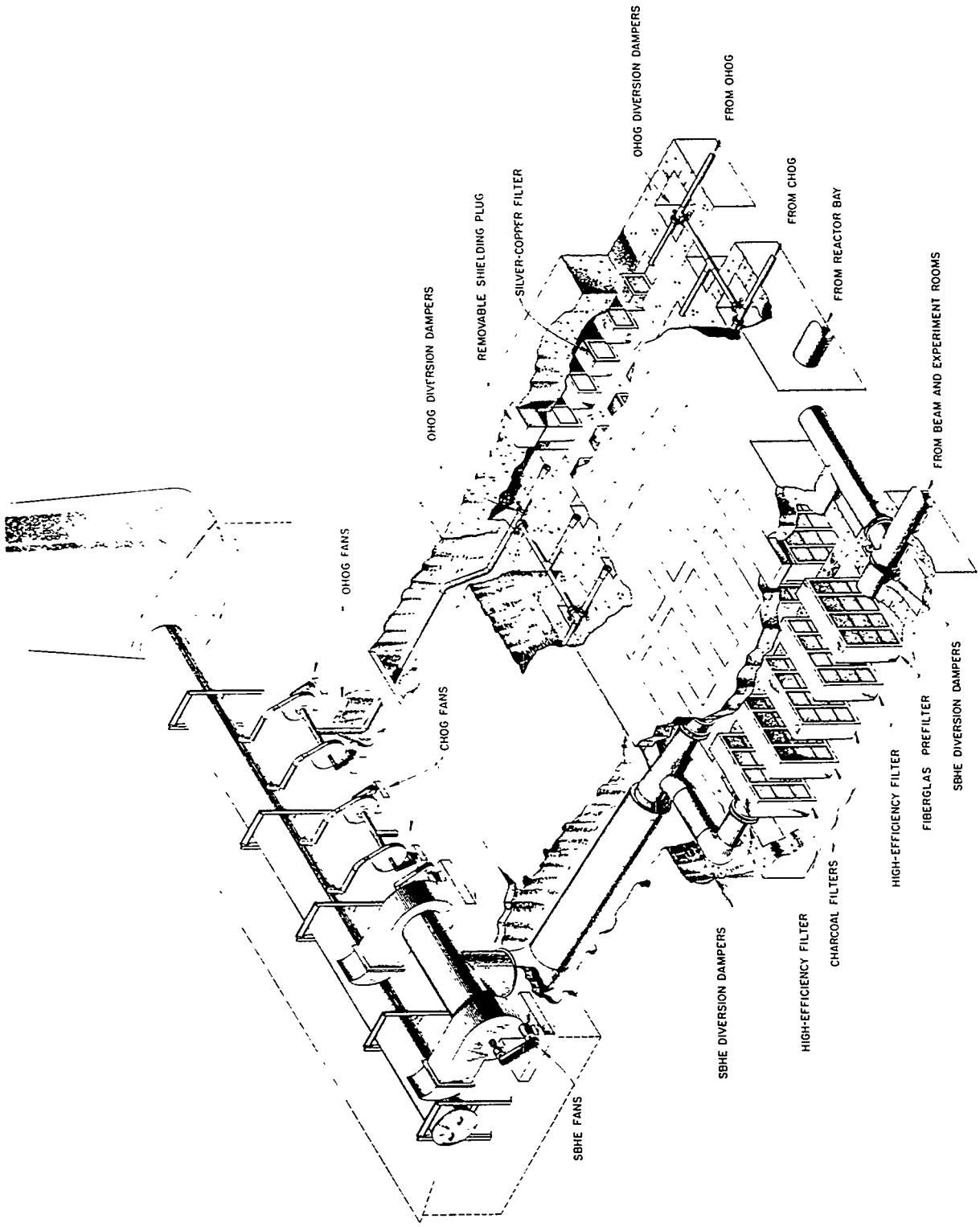

Fig. 4.7.1. Isometric of Exhaust Fans and Filter Pits.

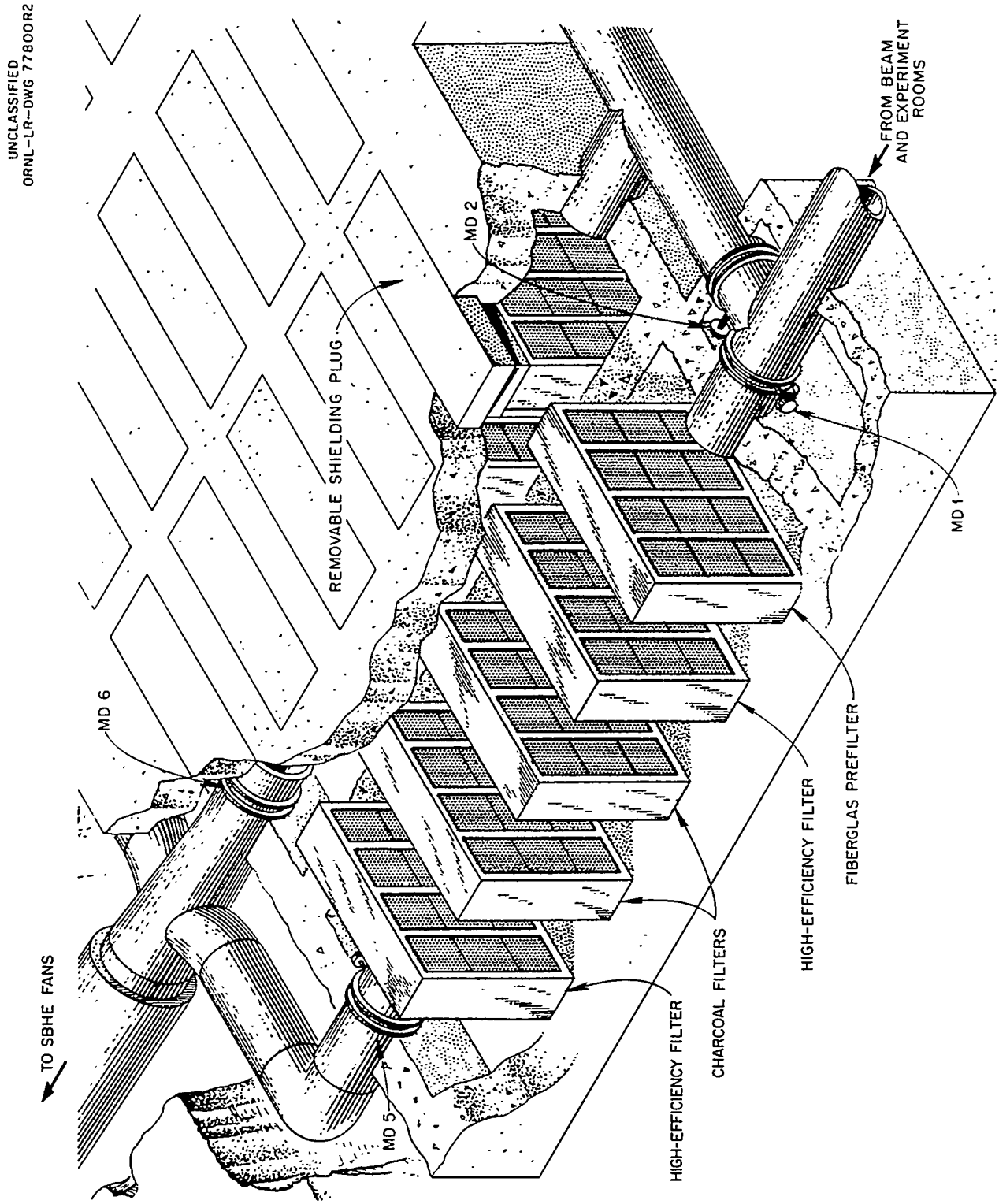

Fig. 4.7.2. SBHE Filter Pits.

UNCLASSIFIED
ORNL-LR-DWG 77805R2

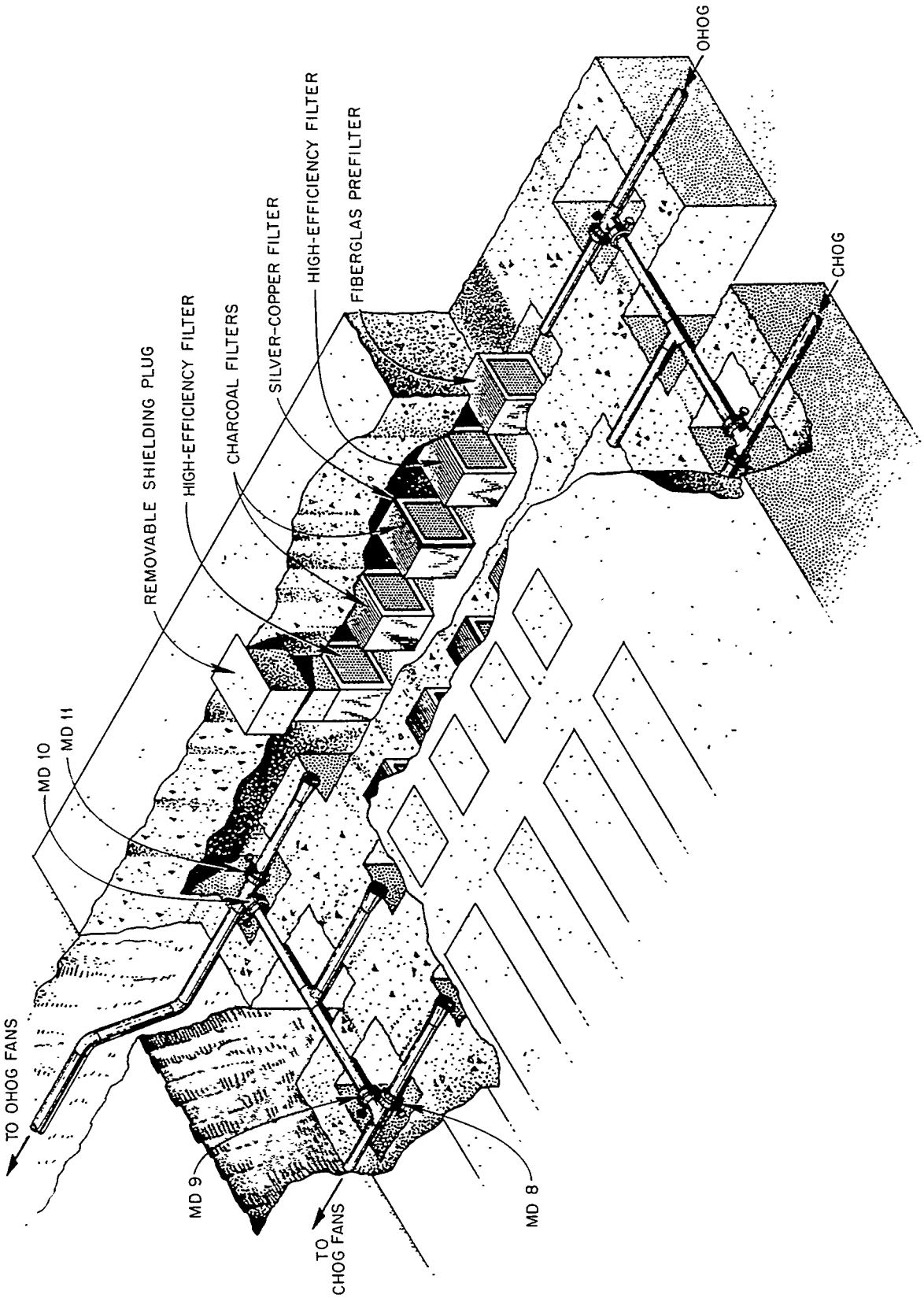

Fig. 4.7.3. HOG Filter Pits.

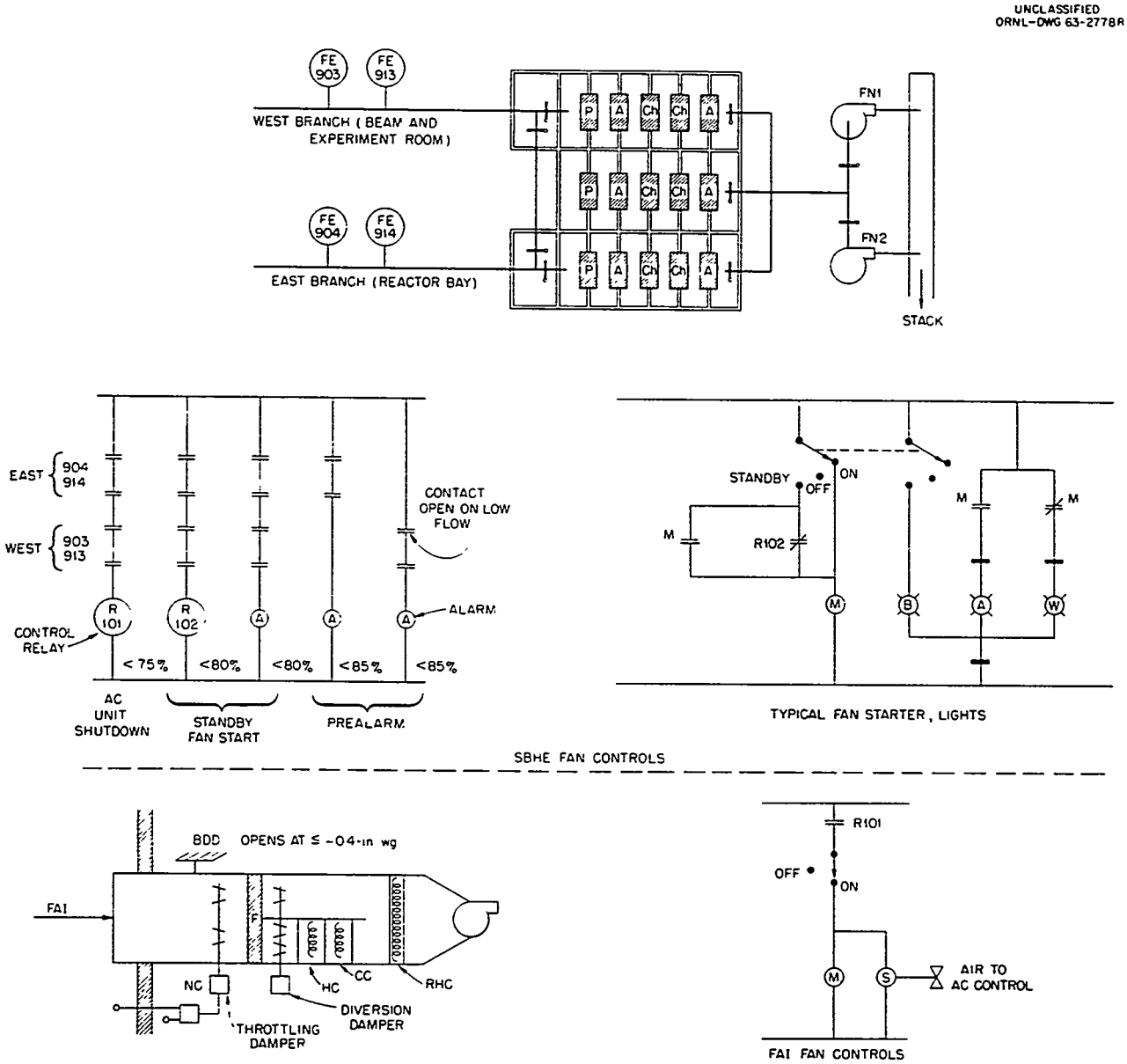

Fig. 4.9.1. SBHE Fan and FAI Controls.

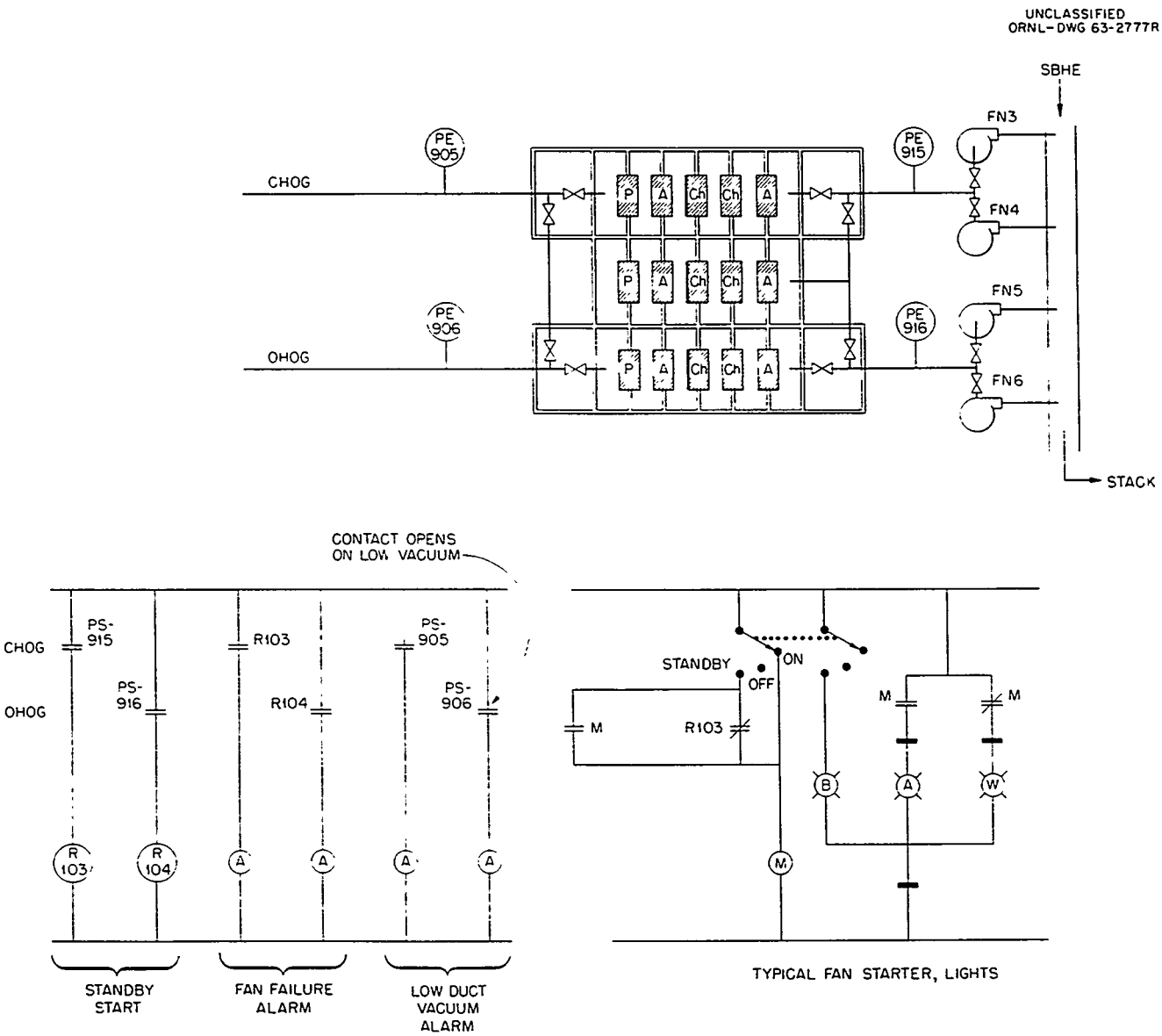

Fig. 4.9.2. HOG Fan Controls.

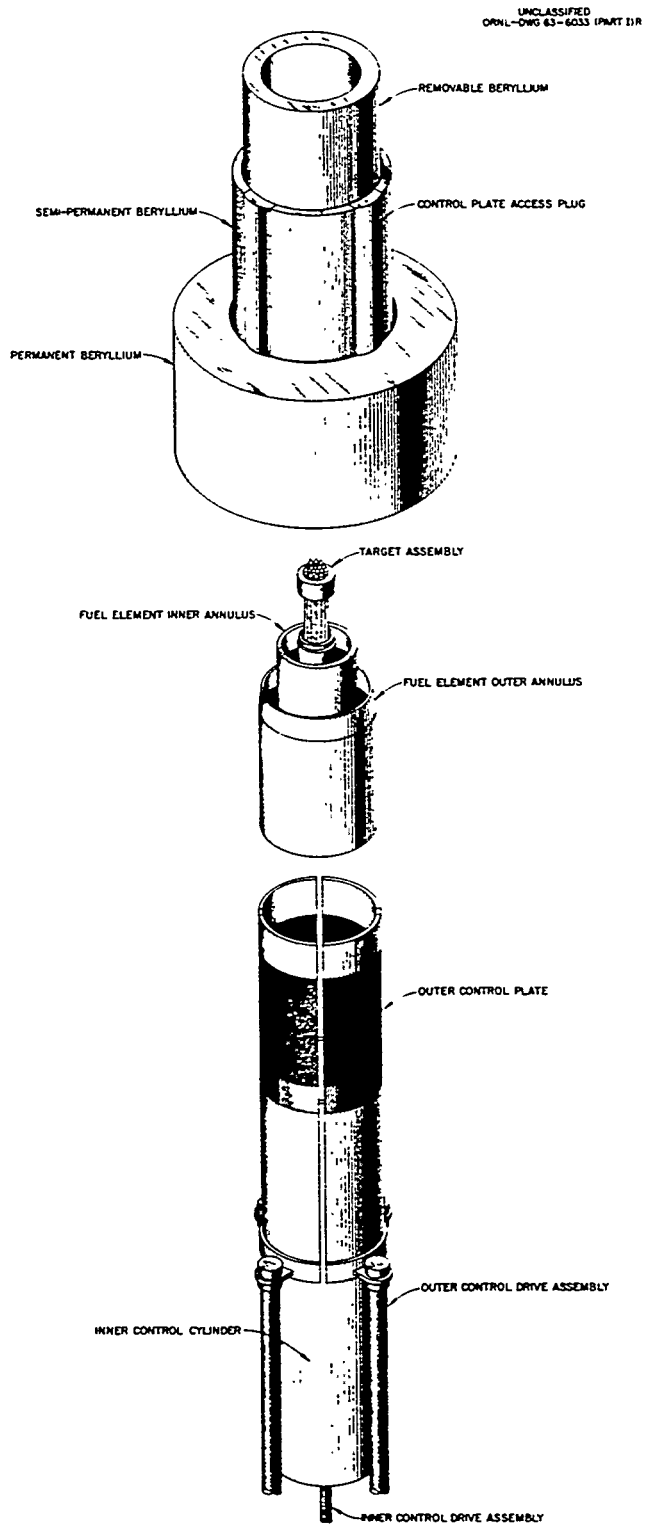

Fig. 5.1.1. Exploded View of Core.

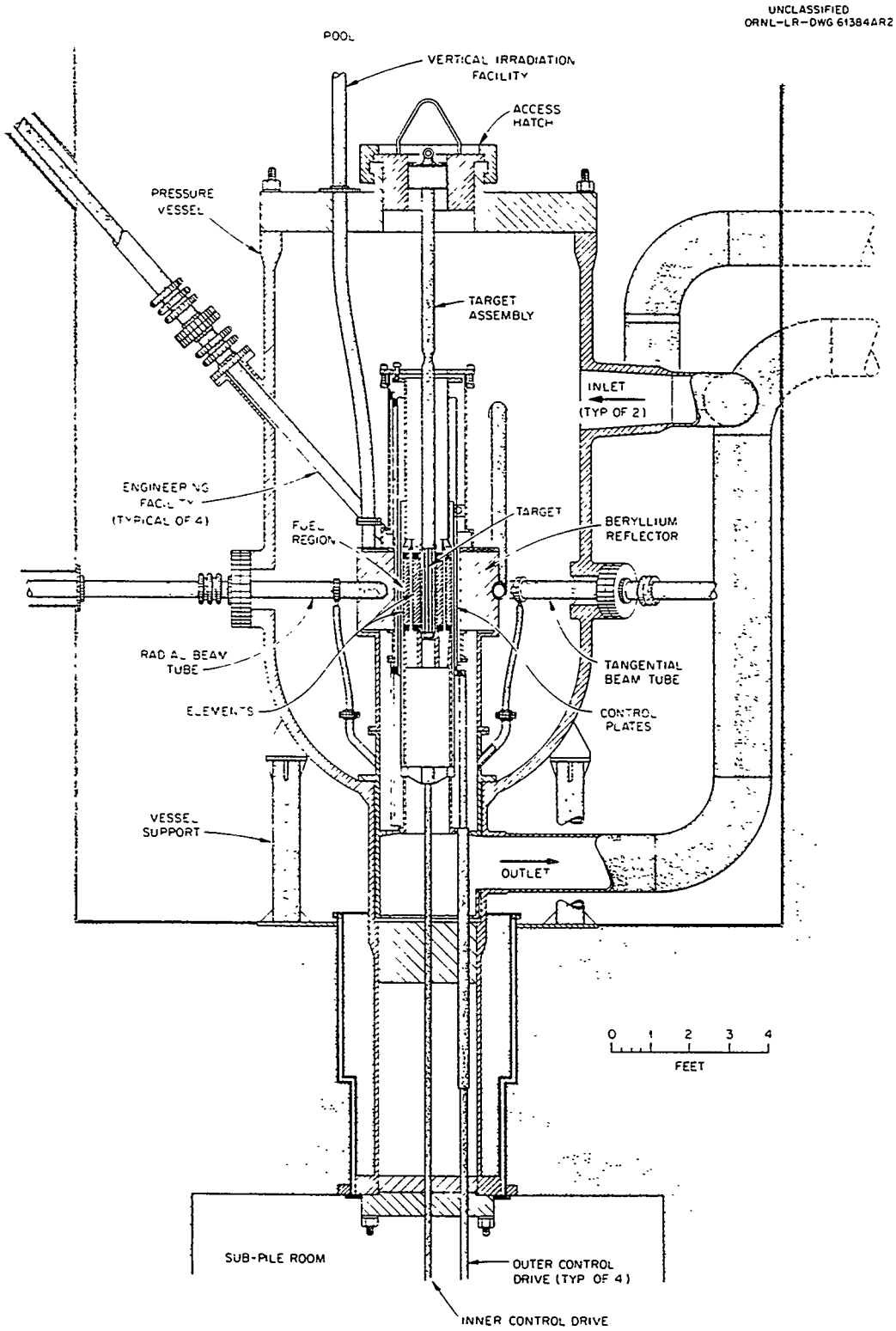

Fig. 5.1.2. Vertical Section of Reactor Vessel and Core.

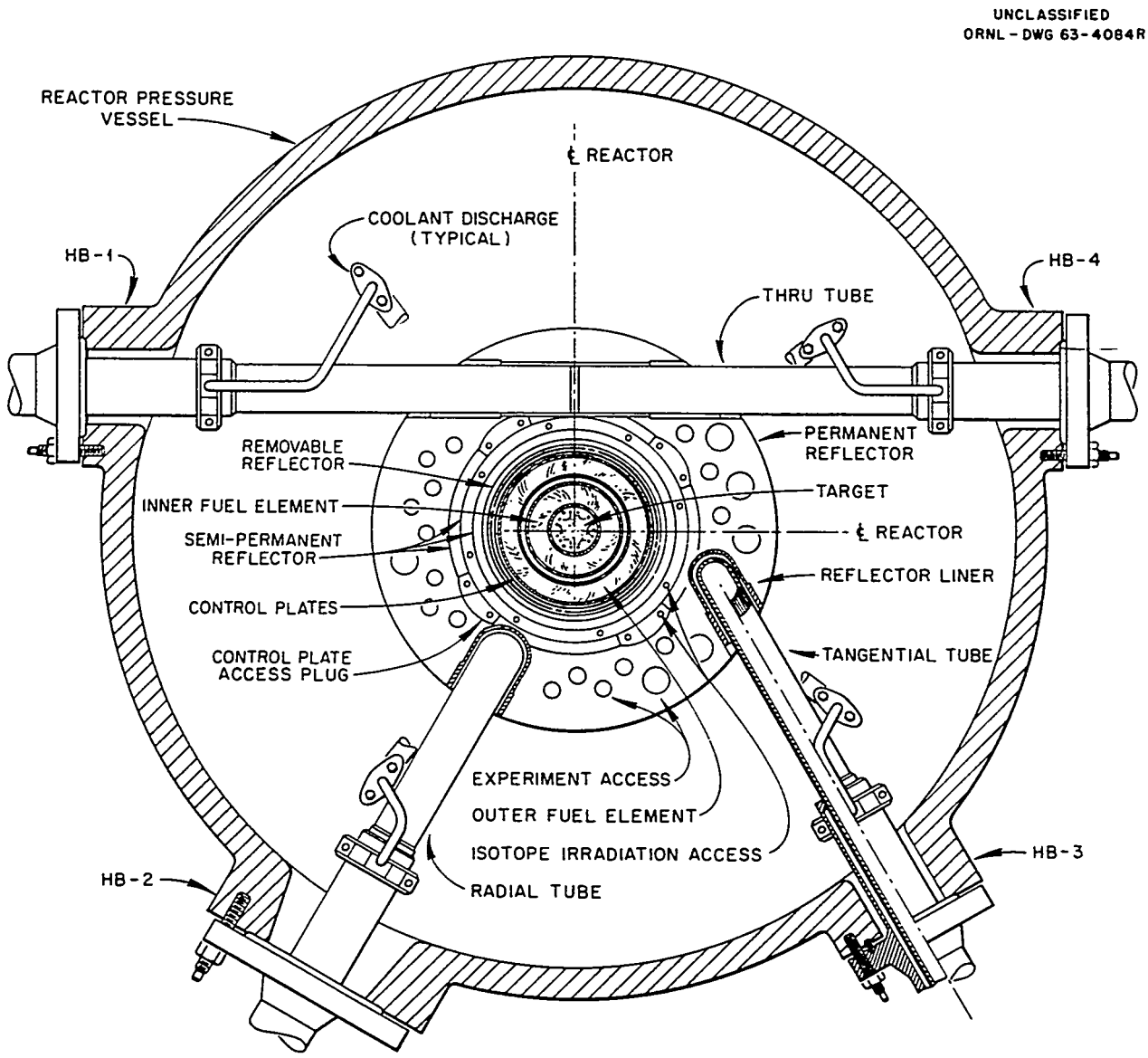

Fig. 5.1.3. Plan View of Reactor Core.

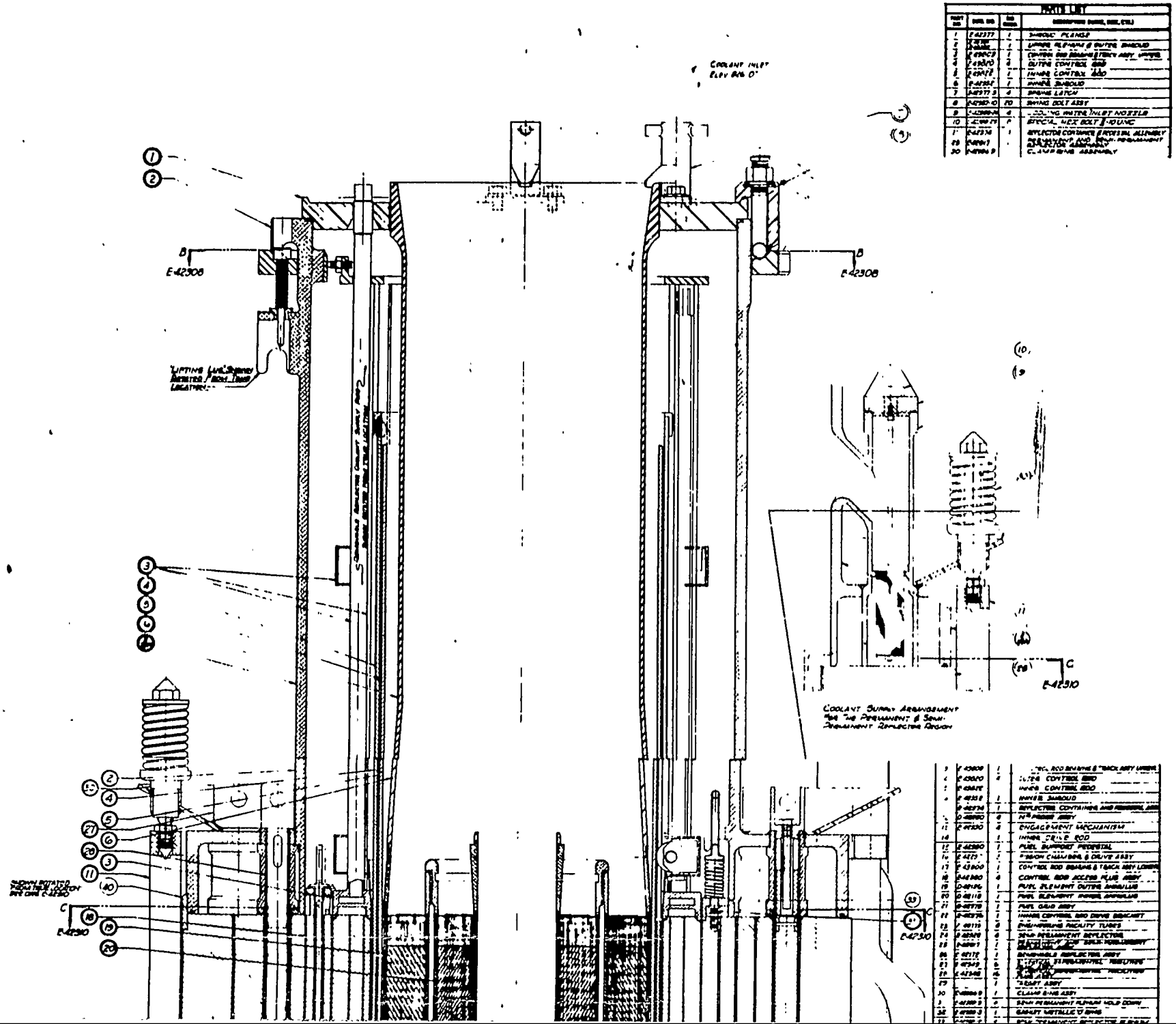

PART NO	DWG. NO.	NO. REQD.	DESCRIPTION (NAME, SIZE, ETC.)
1	E-42377	1	SHROUD FLANGE
2	[illegible]	1	UPPER REFLECTOR & OUTER SHROUD
3	E-42[illegible]	1	CONTROL ROD BRAKING & TRACK ASSY UPPER
4	E-42[illegible]	2	OUTER CONTROL ROD
5	E-42[illegible]	1	INNER CONTROL ROD
6	E-42[illegible]	1	INNER SHROUD
7	E-42377 3	4	SPRING LATCH
8	[illegible]	70	SPRING BOLT ASSY
9	[illegible]	4	COOLING WATER INLET NOZZLE
10	[illegible]	8	SPECIAL HEX BOLT & YOUNG
11	E-42[illegible]	1	REFLECTOR CONTAINER & PERIPHERAL ASSEMBLY
28	[illegible]	1	SEMI-PERMANENT REFLECTOR ASSEMBLY
30	[illegible]		CLAMP RING ASSEMBLY
3	E-43[illegible]	1	CONTROL ROD BRAKING & TRACK ASSY LOWER
4	E-43[illegible]	2	OUTER CONTROL ROD
5	E-43[illegible]		INNER CONTROL ROD
6	E-42[illegible]	1	INNER SHROUD
7	E-42[illegible]	1	REFLECTOR CONTAINER AND PERIPHERAL ASSY
8	D-[illegible]	6	[illegible] ASSY
11	E-[illegible]	6	ENGAGEMENT MECHANISM
14		1	INNER DRIVE ROD
15	E-42[illegible]	1	FUEL SUPPORT PEDESTAL
16	E-42[illegible]	1	PINION CHAMBER & DRIVE ASSY
17	E-43[illegible]	1	CONTROL ROD BRAKING & TRACK ASSY LOWER
18	E-42[illegible]	4	CONTROL ROD ROLLER PLUG ASSY
19	D-42[illegible]	1	FUEL ELEMENT OUTER ANNULUS
20	D-42[illegible]	1	FUEL ELEMENT INNER ANNULUS
21	D-42[illegible]	1	FUEL GUIDE ASSY
22	D-42[illegible]	1	INNER CONTROL ROD DRIVE BRACKET
23	[illegible]	8	ENGINEERING FACILITY TUBES
24	D-42[illegible]	6	SEMI-PERMANENT REFLECTOR
25	D-42[illegible]	1	SEMI-PERMANENT REFLECTOR HOLD DOWN ASSY
26	[illegible]	1	DISPOSABLE REFLECTOR ASSY
27	[illegible]	6	[illegible]
28	[illegible]	6	[illegible]
29		1	GASKET ASSY
30	[illegible]	1	CLAMP RING ASSY
31	[illegible]	2	SEMI-PERMANENT PLENUM HOLD DOWN
32	[illegible]	1	GASKET METALLIC O RING
33	[illegible]	1	SEMI-PERMANENT REFLECTOR [illegible]

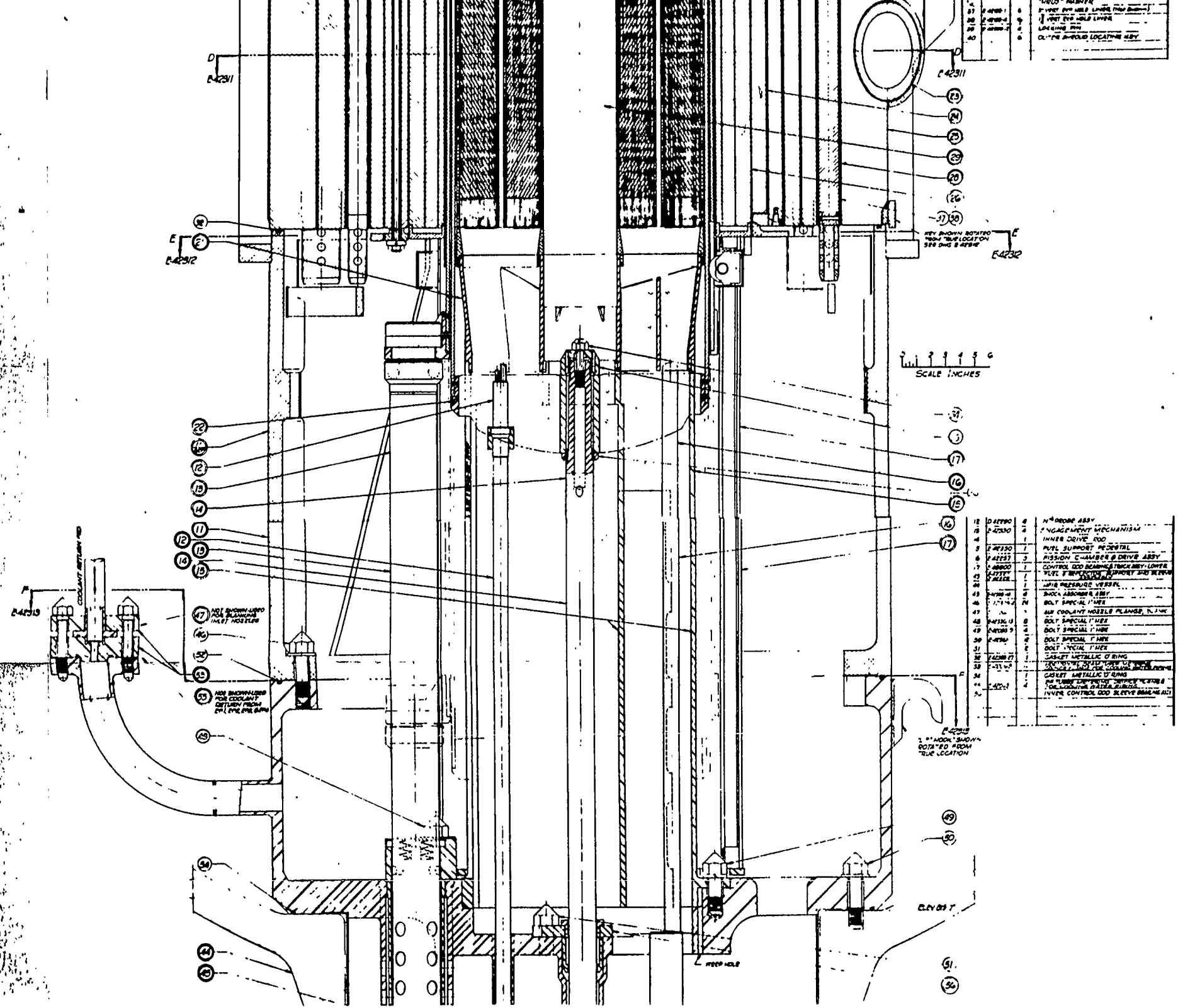
SCALE INCHES
FUEL SUPPORT PEDESTAL
FISSION CHAMBER & DRIVE ASSY
CONTROL ROD BELLCRANK ASSY - LOWER
SHOCK ABSORBER ASSY
BOLT SPECIAL 1" HEX
BOLT SPECIAL 1" HEX
BOLT SPECIAL 1" HEX
BOLT SPECIAL 1" HEX
GASKET METALLIC O RING
GASKET METALLIC O RING
INNER CONTROL ROD SLEEVE
ENGAGEMENT MECHANISM
INNER DRIVE ROD
NOT SHOWN-USED FOR COOLANT OUTLET FROM
NOT SHOWN-USED FOR COOLANT INLET NOZZLES
COOLANT RETURN
NOT SHOWN-ROTATED FROM TRUE LOCATION
NOT SHOWN-ROTATED FROM TRUE LOCATION
ELEV 85.7
FEED HOLE
E-42311
E-42312
E-42319

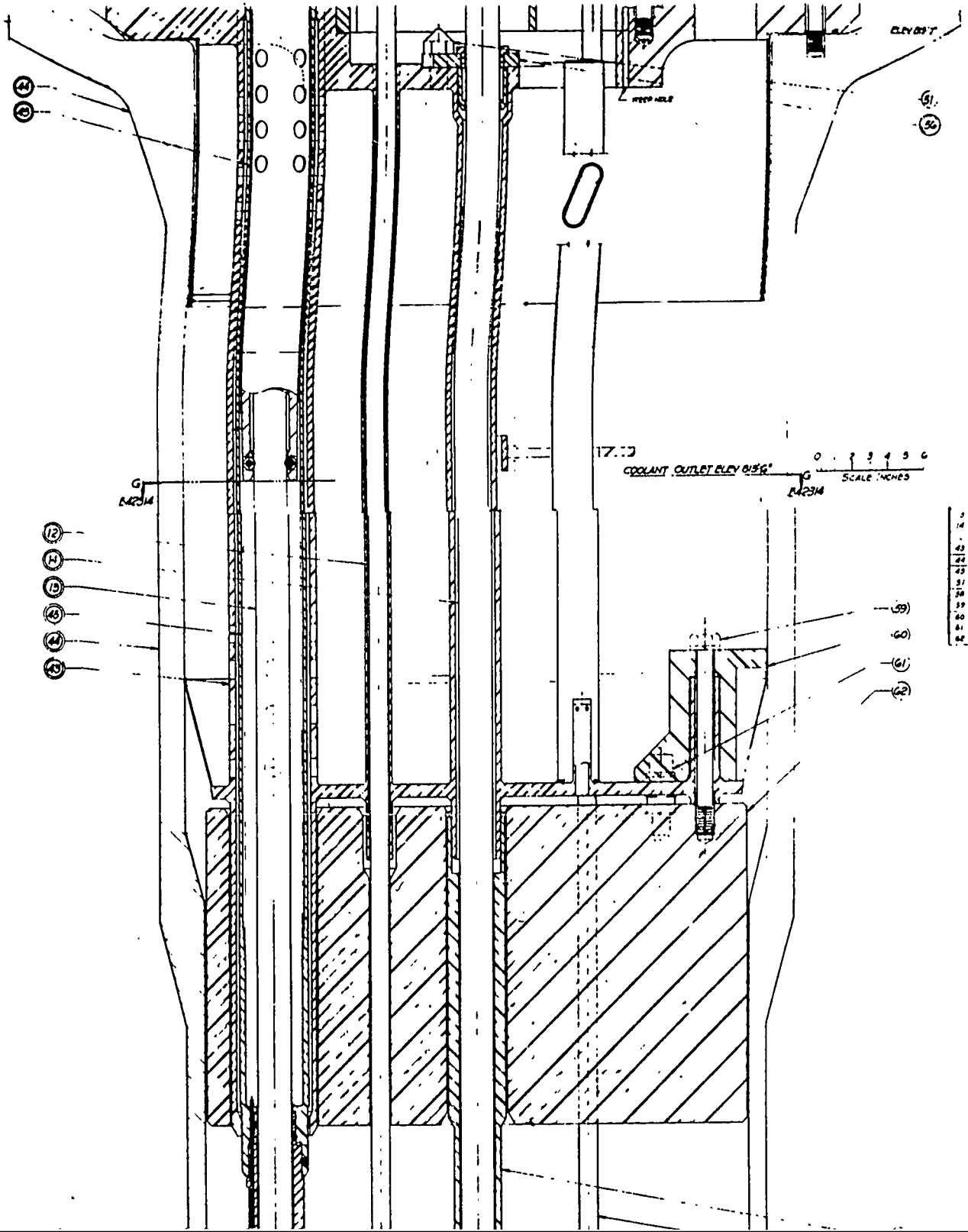

3	P 42330	4	ENGAGEMENT MECHANISM
14		1	INNER DRIVE ROD
	P 42291	3	MISSION CHANGER & DRIVE ASSY
43	P 42328	1	ROTL & SERVICING ROBOTS ASSY
44		1	HIGH PRESSURE VESSEL
45	P 42285 14	4	SHOCK ABSORBER ASSY
51	P 42299 3		INNER DRIVE ROD SHIELD
50	P 42287 9	2	BEAT SWITCH ACTUATOR
59	P 42291 9	4	BOLT
60	P 42291 3	4	SPACER LUG
61	P 42289 9	4	BOLT 1 POCKET HEAD
62	P 42288	1	VESSEL EXTENSION SHIELD PLUG

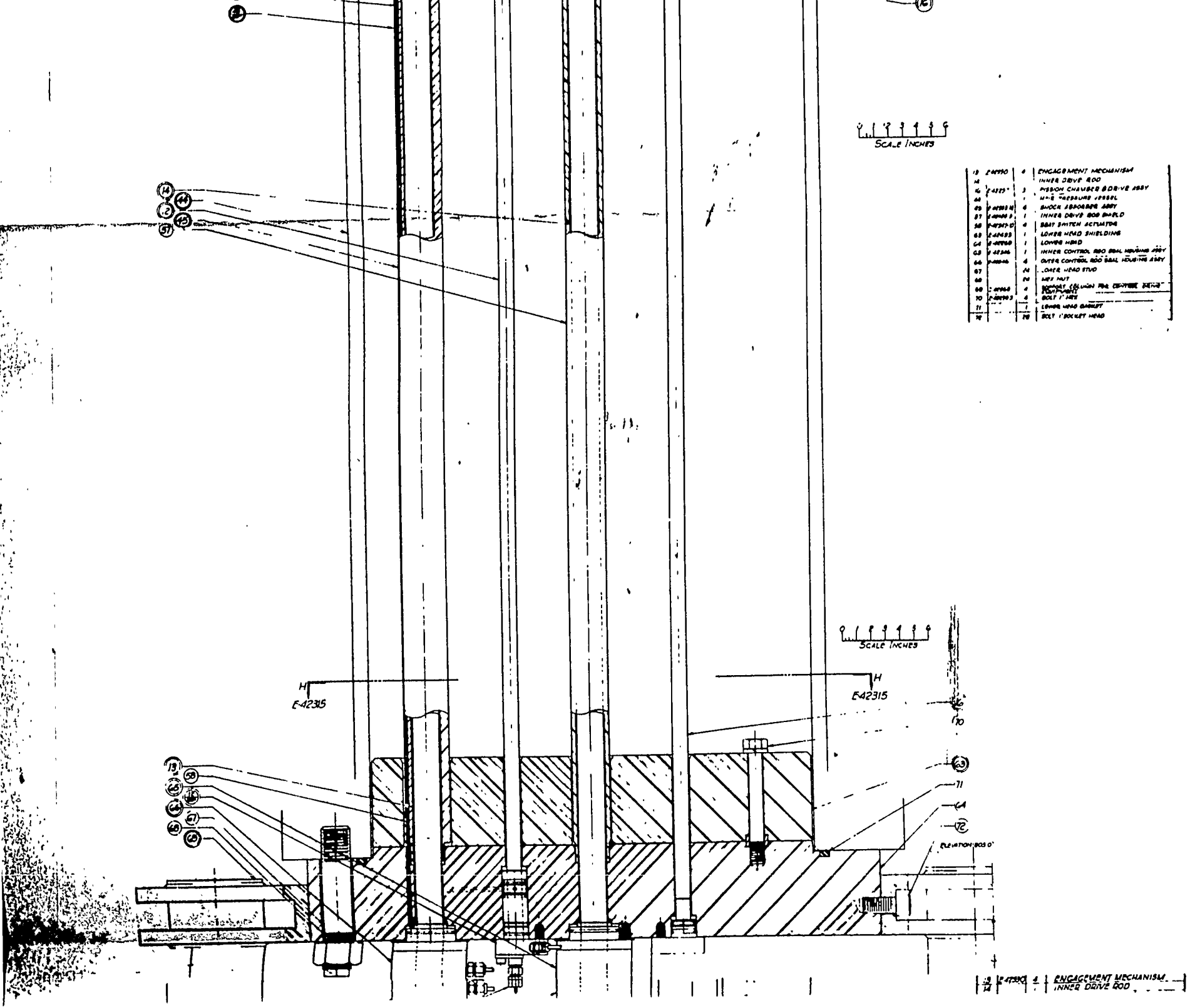
SCALE INCHES
SCALE INCHES
H
E-42315
H
E-42315
ELEVATION 805.0'
ENGAGEMENT MECHANISM
INNER DRIVE ROD

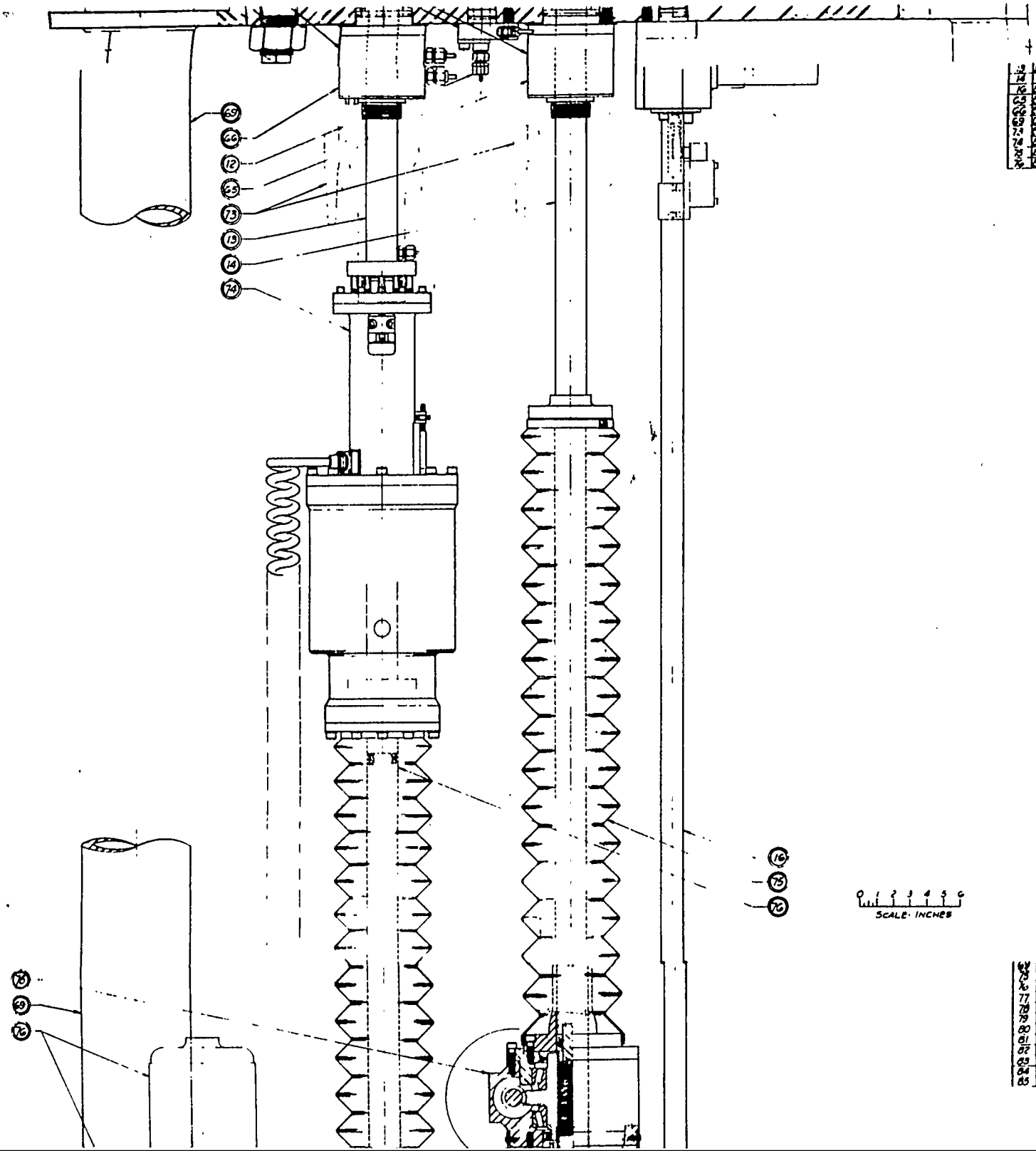

13	C-47390	4	ENGAGEMENT MECHANISM
14		1	INNER DRIVE ROD
16	D-47797	3	FISSION CHAMBER & DRIVE ASSY
65	D-47963	1	INNER CONTROL ROD SEAL HOUSING
66	D-47964	4	OUTER CONTROL ROD SEAL HOUSING
69	D-47965	4	PRIMARY SUPPORT COLUMN
73	D-47966	3	VALVE
74	C-47791	4	OUTER CONTROL ROD DRIVE MAGNET ASSEMBLY
75	D-47968	1	SHIM DRIVE FOR INNER CONTROL ROD
76	D-47909	4	OUTER CONTROL ROD DRIVE

69	D-47965	4	PRIMARY SUPPORT COLUMN
75	D-47968	1	SHIM DRIVE ROD INNER CONTROL ROD
76	C-47909	4	OUTER CONTROL ROD DRIVE
77	D-47969	1	CENCO ROTATING CAM SWITCH
78	D-47970	1	REGULATING DRIVE POSITION INDICATOR
79	C-47971	4	OUTER CONTROL ROD POSITION INDICATOR
80	D-47972	4	LOWER SUPPORT COLUMN
81	D-47973	1	SUPPORT PLATFORM
82	D-47974	1	SERVO INPUT MECHANISM
83	C-47975	1	REGULATING DRIVE ASSY
84	D-47976	1	INNER CONTROL ROD POSITION INDICATOR
85	D-47977	14	LIMIT SWITCH ADJUSTABLE STOP ASSY

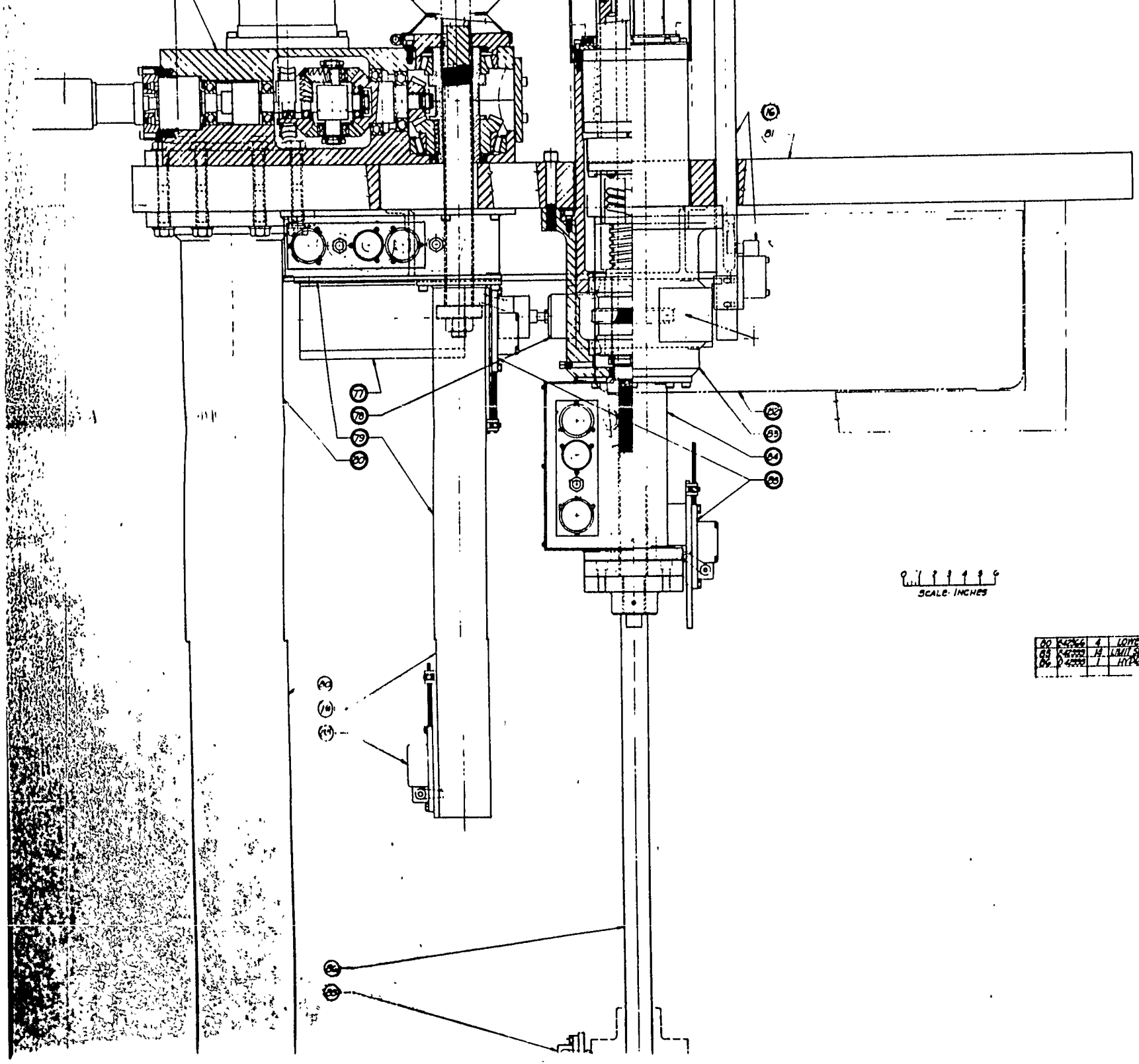

00	K42066	4	LOWER SUPPORT COLUMN
03	K46700	14	LIMIT SWITCH ADJUSTABLE STYLE ASSY
04	D 42000	1	HYDRAULIC CYLINDER 500 LBS

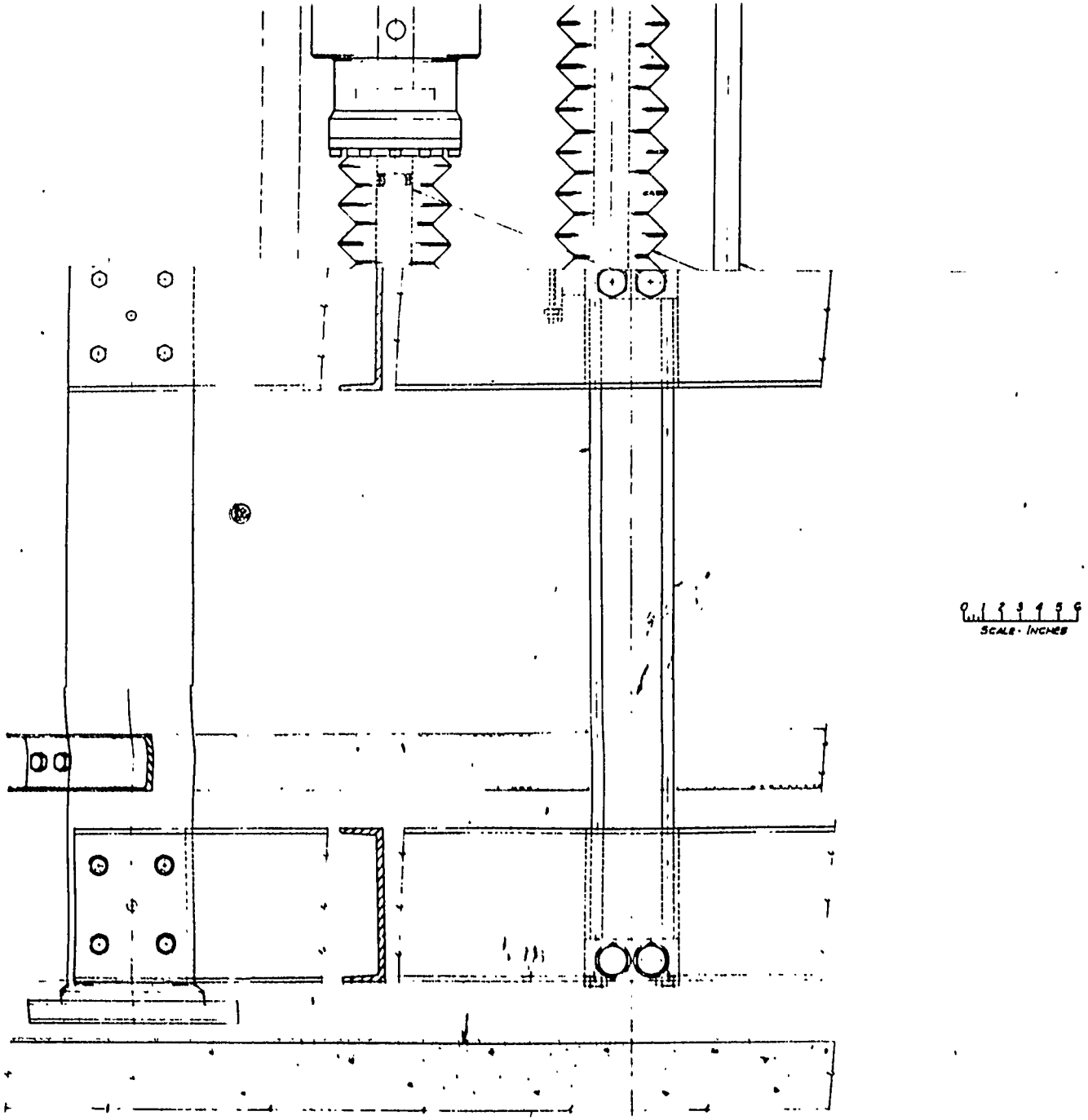

Fig. 5.1.4. Reactor Assembly.

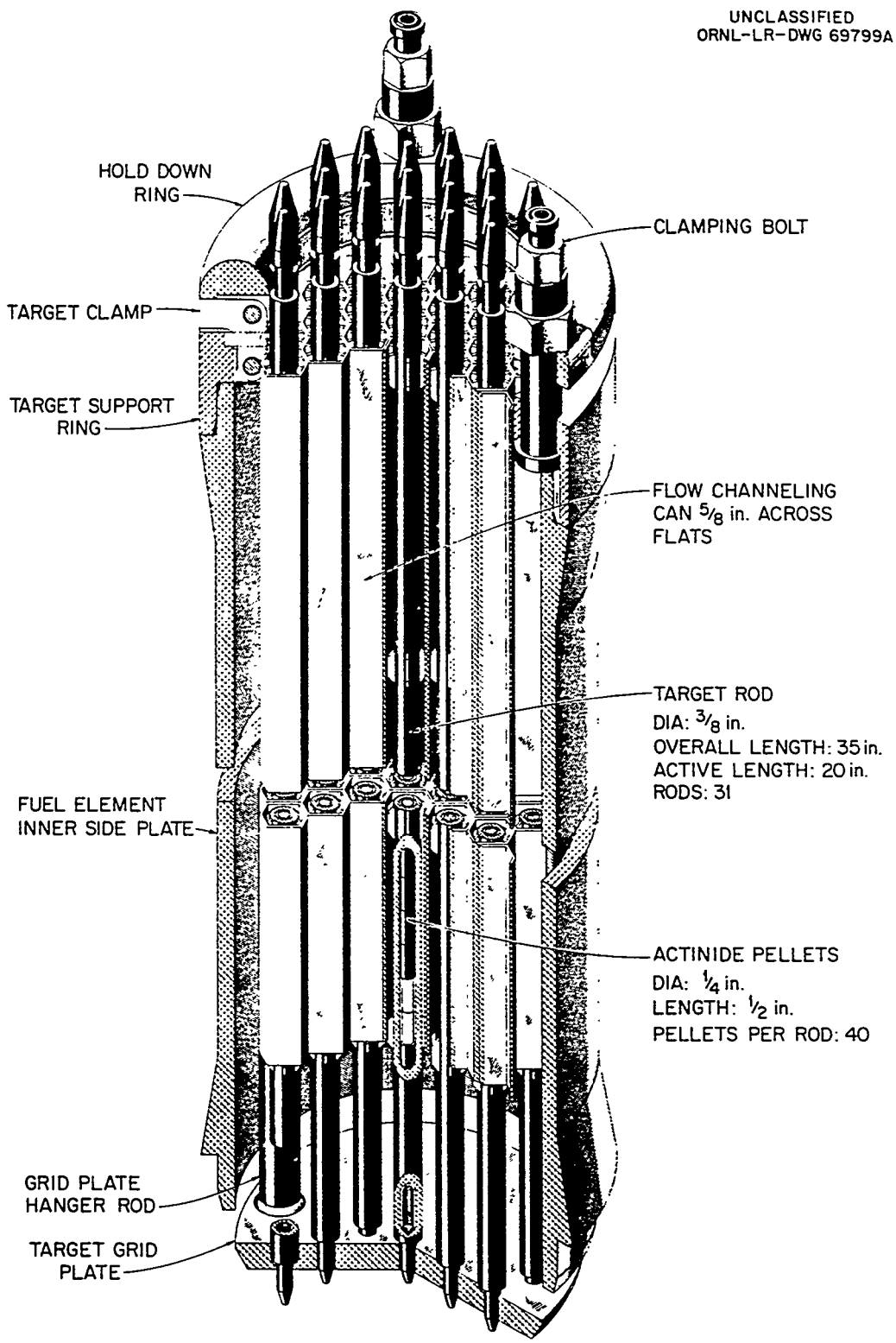

Fig. 5.2.1. Target Assembly.

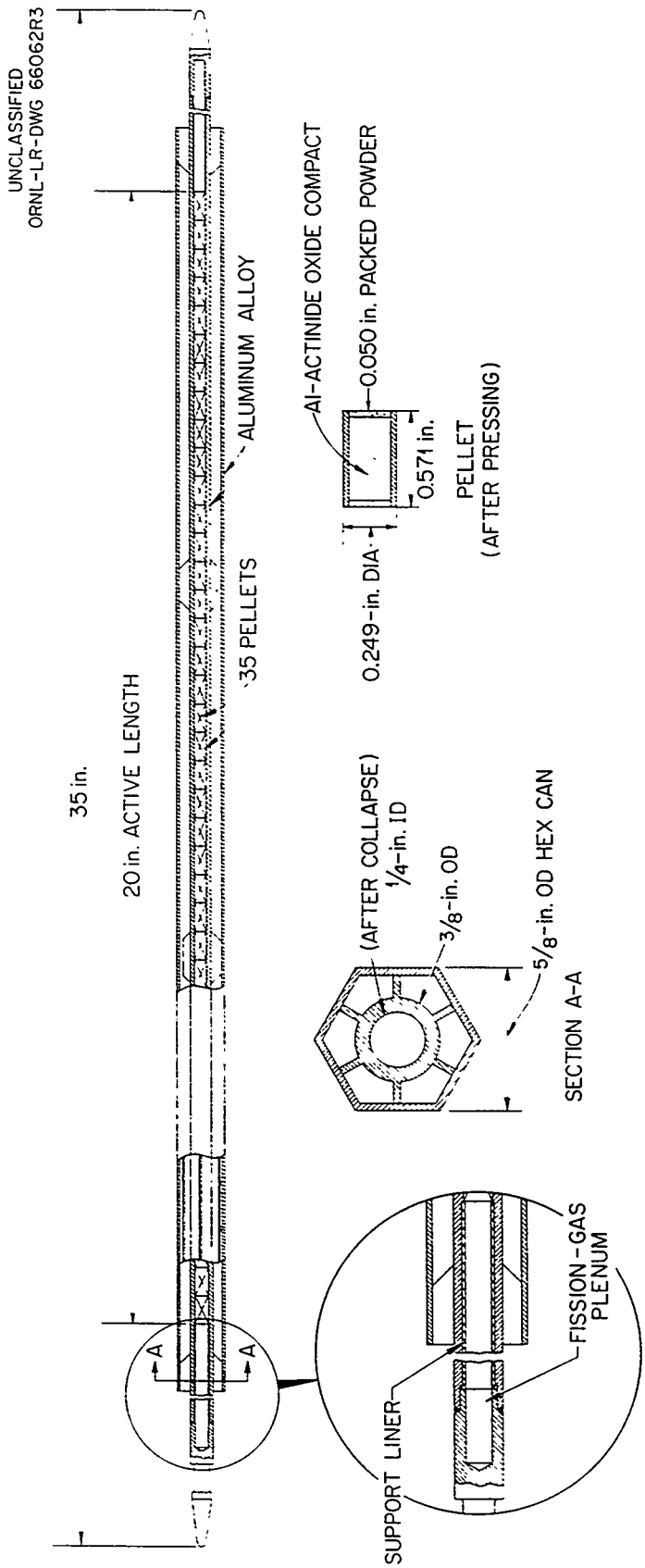

Fig. 5.2.2. Target Rod.

UNCLASSIFIED
ORNL-LR-DWG 54990 R3

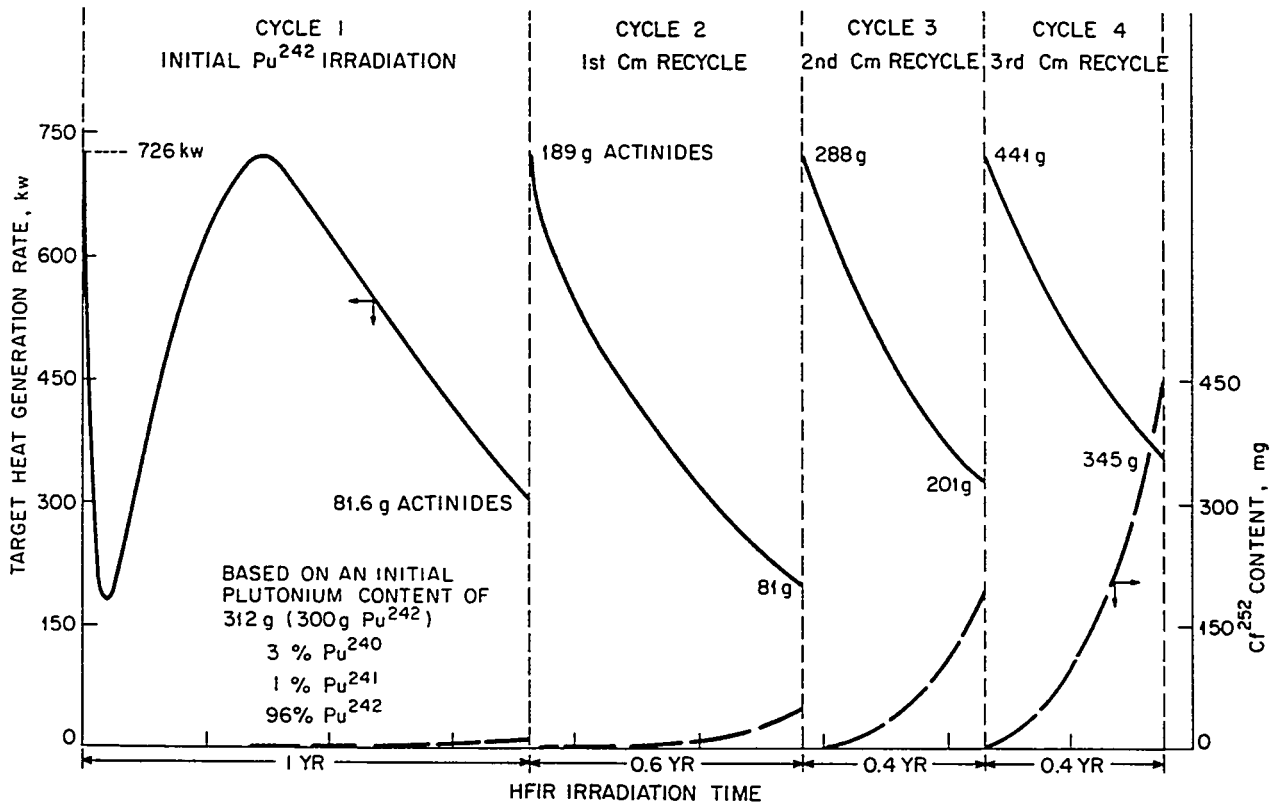

Fig. 5.2.3. Variation with Time of the Target Heat-Generation Rate and Cross Section.

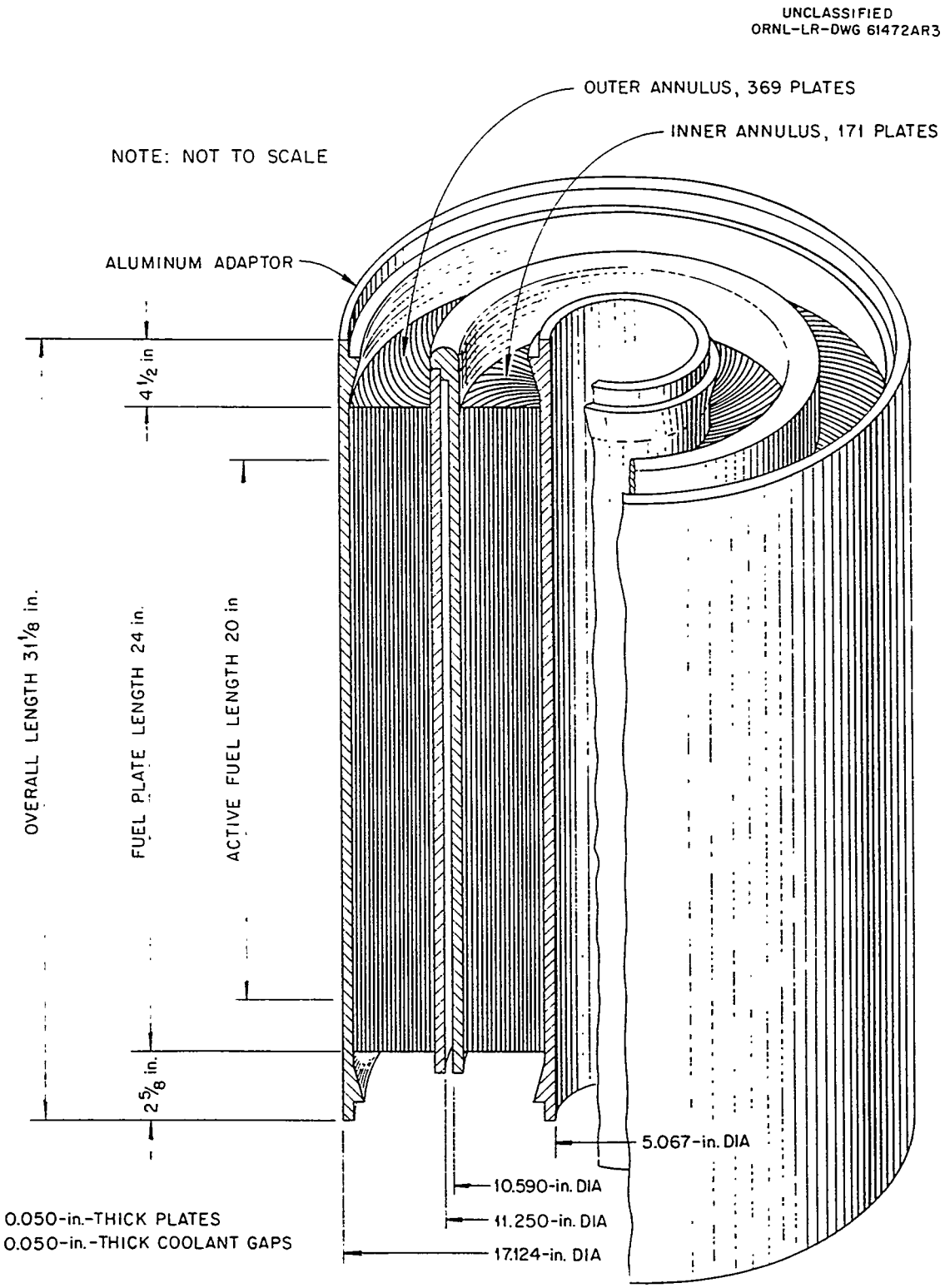

Fig. 5.2.4. Fuel Element.

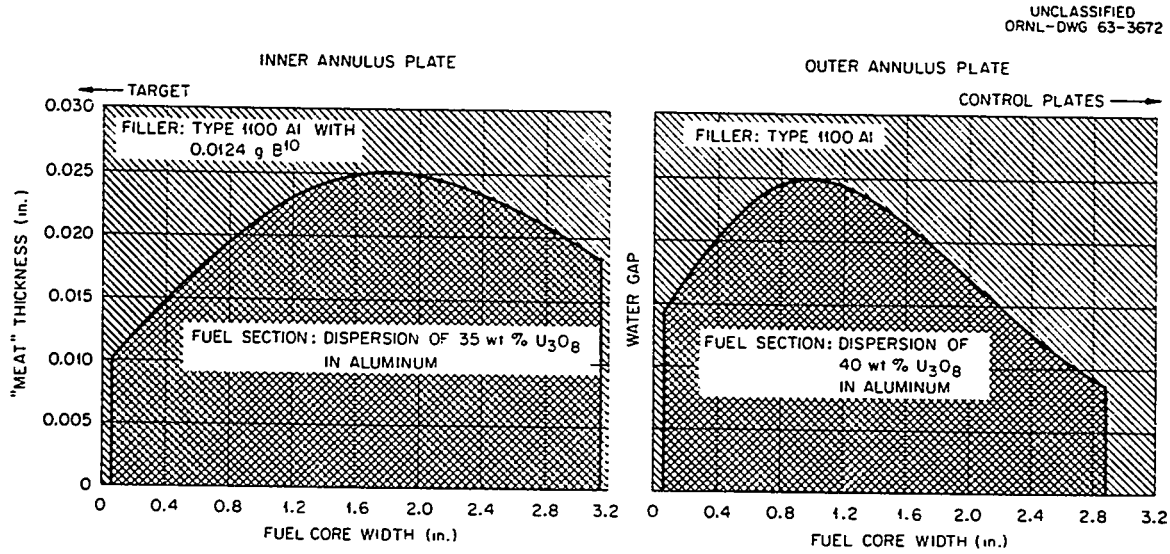

Fig. 5.2.5(*a*). Cross Section of Fuel Plate Before Bending.

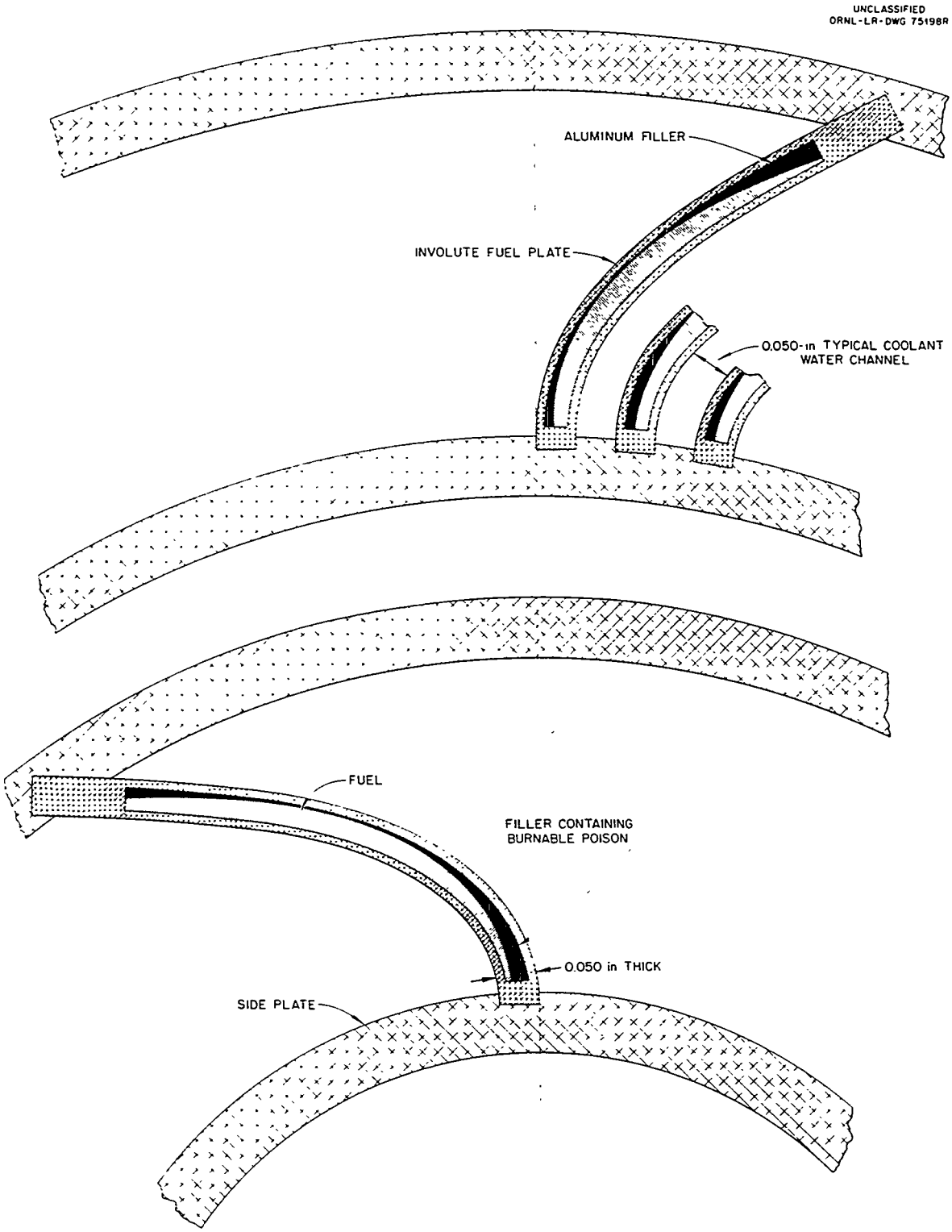

Fig. 5.2.5(*b*). Fuel and Burnable-Poison Distribution in the As-Built Element.

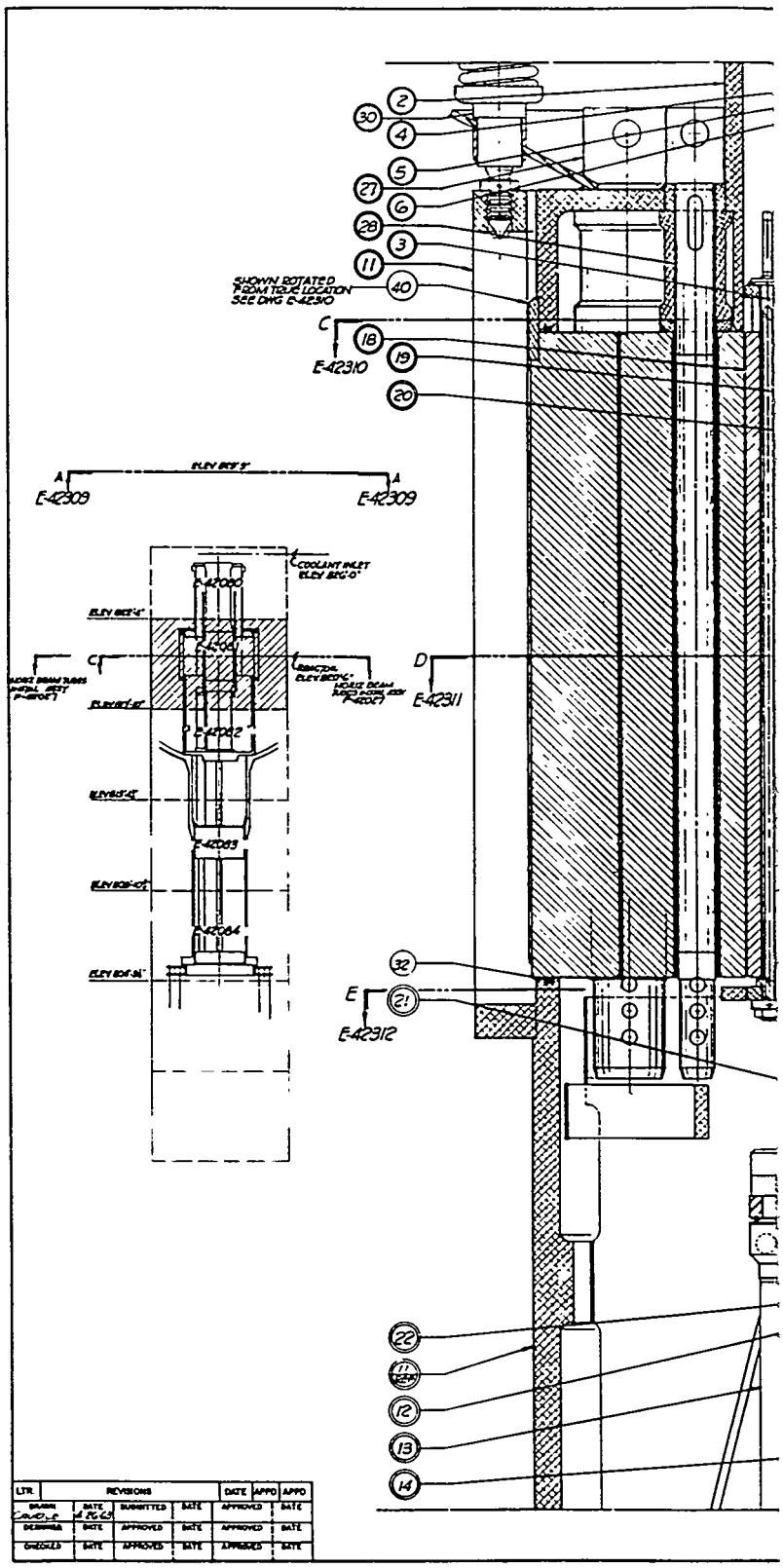
SHOWN ROTATED FROM TRUE LOCATION SEE DWG E-42310
E-42310
E-42309
E-42309
E-42311
E-42312
COOLANT INLET
E-42080
E-42081
E-42082
E-42083
E-42084
REVISIONS
DATE
APPD
SUBMITTED
APPROVED

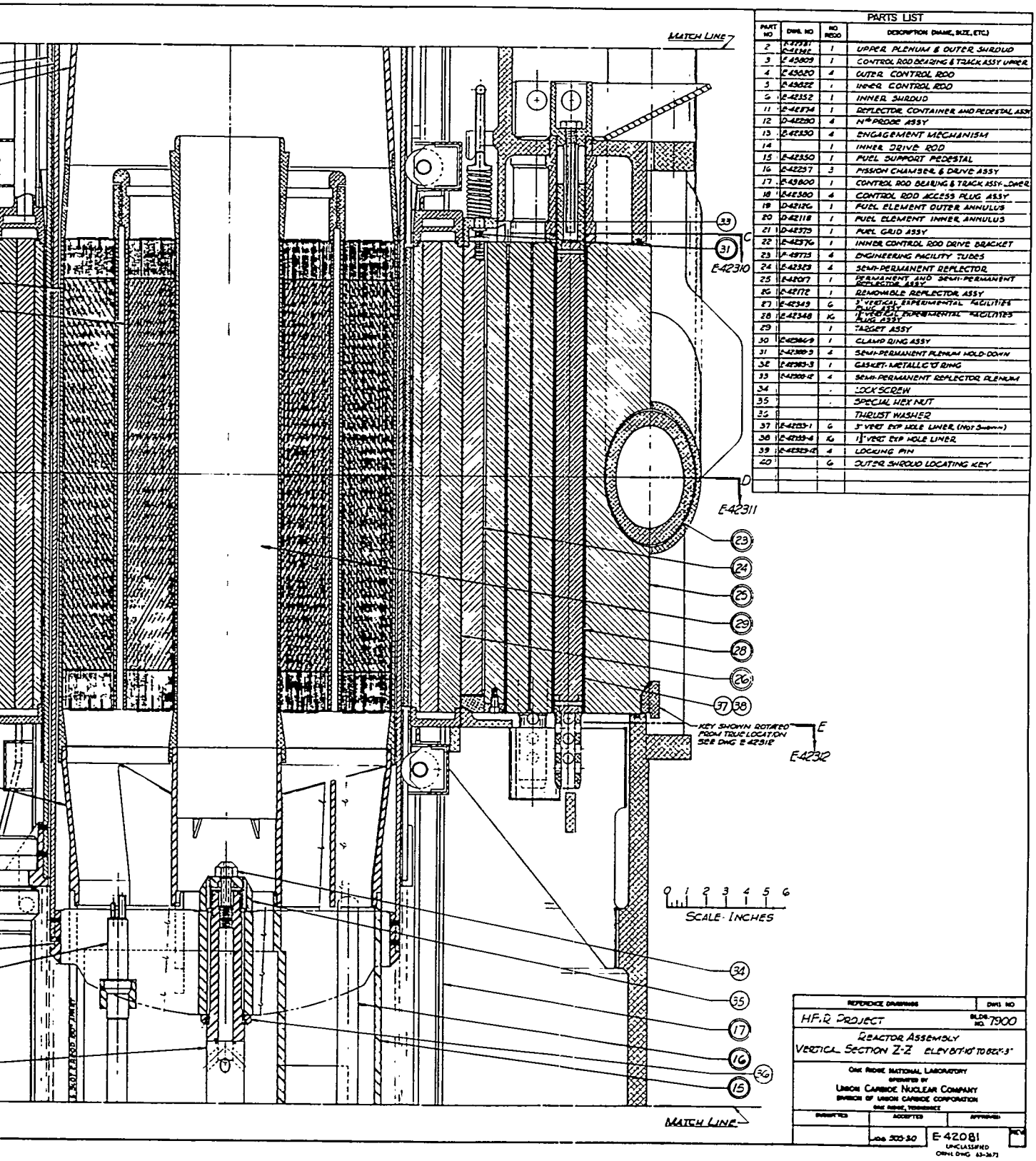

PARTS LIST

PART NO	DWG NO	NO REQD	DESCRIPTION (NAME, SIZE, ETC.)
2	E-42581 E-42582	1	UPPER PLENUM & OUTER SHROUD
3	E-43809	1	CONTROL ROD BEARING & TRACK ASSY UPPER
4	E-43820	4	OUTER CONTROL ROD
5	E-43822	1	INNER CONTROL ROD
6	E-42352	1	INNER SHROUD
11	E-42874	1	REFLECTOR CONTAINER AND PEDESTAL ASSY
12	D-42280	4	N^{th} PROBE ASSY
13	E-42330	4	ENGAGEMENT MECHANISM
14		1	INNER DRIVE ROD
15	E-42350	1	FUEL SUPPORT PEDESTAL
16	E-42257	3	FISSION CHAMBER & DRIVE ASSY
17	E-43800	1	CONTROL ROD BEARING & TRACK ASSY LOWER
18	E-42300	4	CONTROL ROD ACCESS PLUG ASSY
19	D-42126	1	FUEL ELEMENT OUTER ANNULUS
20	D-42118	1	FUEL ELEMENT INNER ANNULUS
21	D-42579	1	FUEL GRID ASSY
22	E-42576	1	INNER CONTROL ROD DRIVE BRACKET
23	F-49713	4	ENGINEERING FACILITY TUBES
24	E-42323	4	SEMI-PERMANENT REFLECTOR
25	E-42017	1	PERMANENT AND SEMI-PERMANENT REFLECTOR ASSY
26	E-42172	1	REMOVABLE REFLECTOR ASSY
27	E-42349	6	3" VERTICAL EXPERIMENTAL FACILITIES PLUG ASSY
28	E-42348	16	1" VERTICAL EXPERIMENTAL FACILITIES PLUG ASSY
29		1	TARGET ASSY
30	E-42386-9	1	CLAMP RING ASSY
31	E-42380-3	4	SEMI-PERMANENT PLENUM HOLD-DOWN
32	E-42383-3	1	GASKET-METALLIC "O" RING
33	E-42308-12	4	SEMI-PERMANENT REFLECTOR PLENUM
34		.	LOCK SCREW
35		.	SPECIAL HEX NUT
36			THRUST WASHER
37	E-42203-1	6	3" VERT EXP HOLE LINER (Not Shown)
38	E-42339-4	16	1" VERT EXP HOLE LINER
39	E-42323-12	4	LOCKING PIN
40		6	OUTER SHROUD LOCATING KEY

Fig. 5.2.6. Reflector – Elevation.

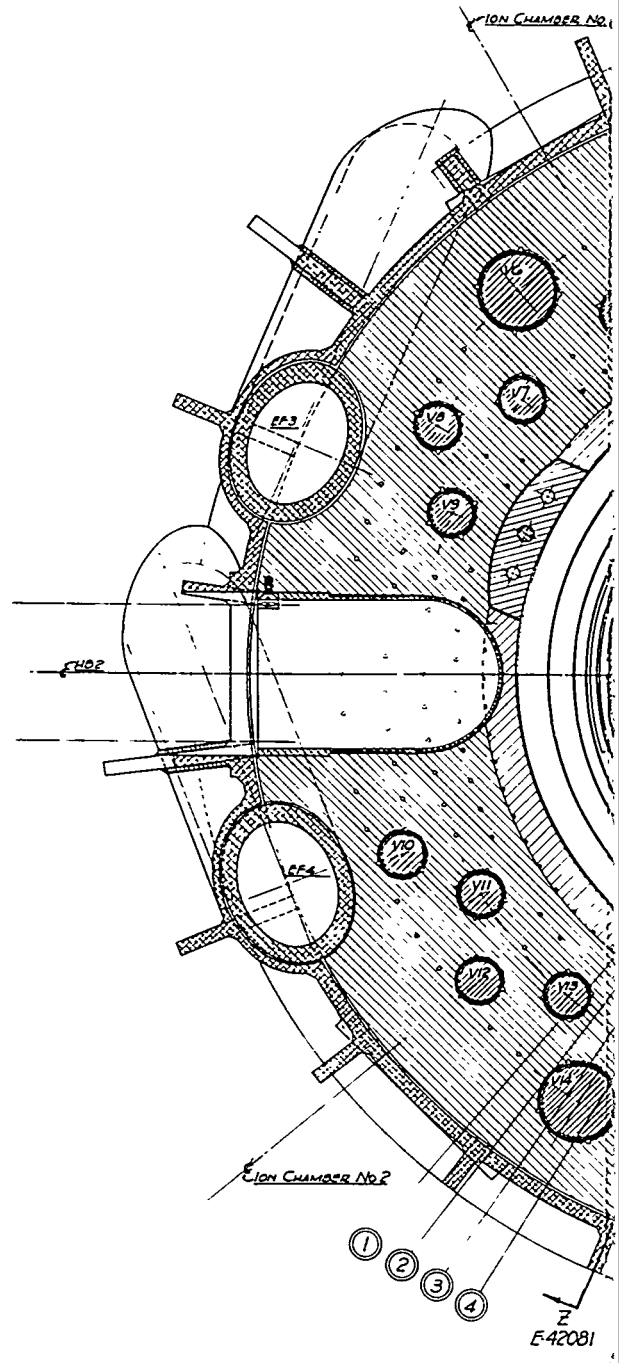

LTR	REVISIONS			DATE	APPD	APPD
DRAWN Cowle	DATE 5-1-68	SUBMITTED	DATE	APPROVED		DATE
DESIGNED	DATE	APPROVED	DATE	APPROVED		DATE
CHECKED	DATE	APPROVED	DATE	APPROVED		DATE

5

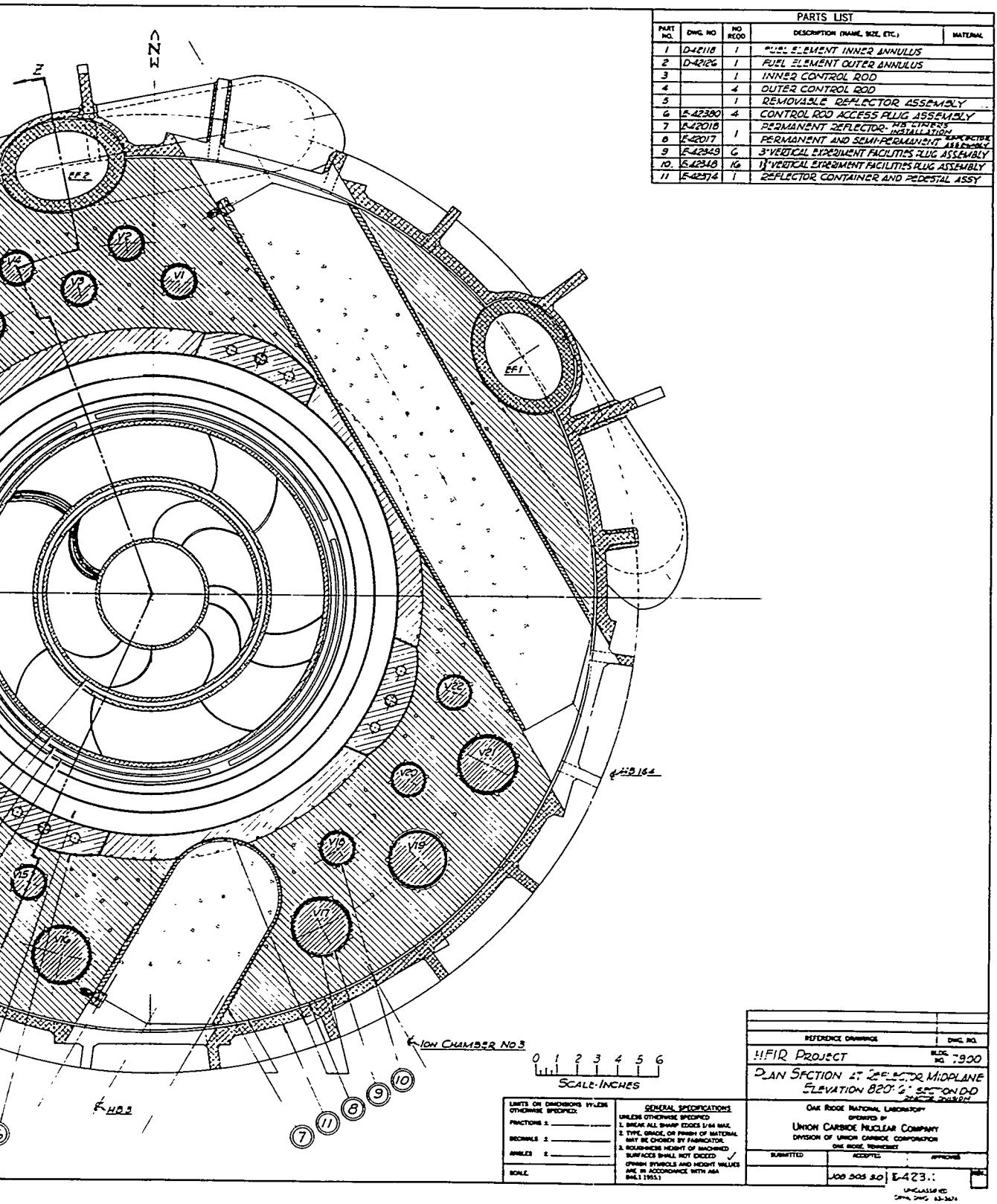

. 5.2.7. Reflector – Plan at Center Line.

UNCLASSIFIED
ORNL-DWG 63-3580R

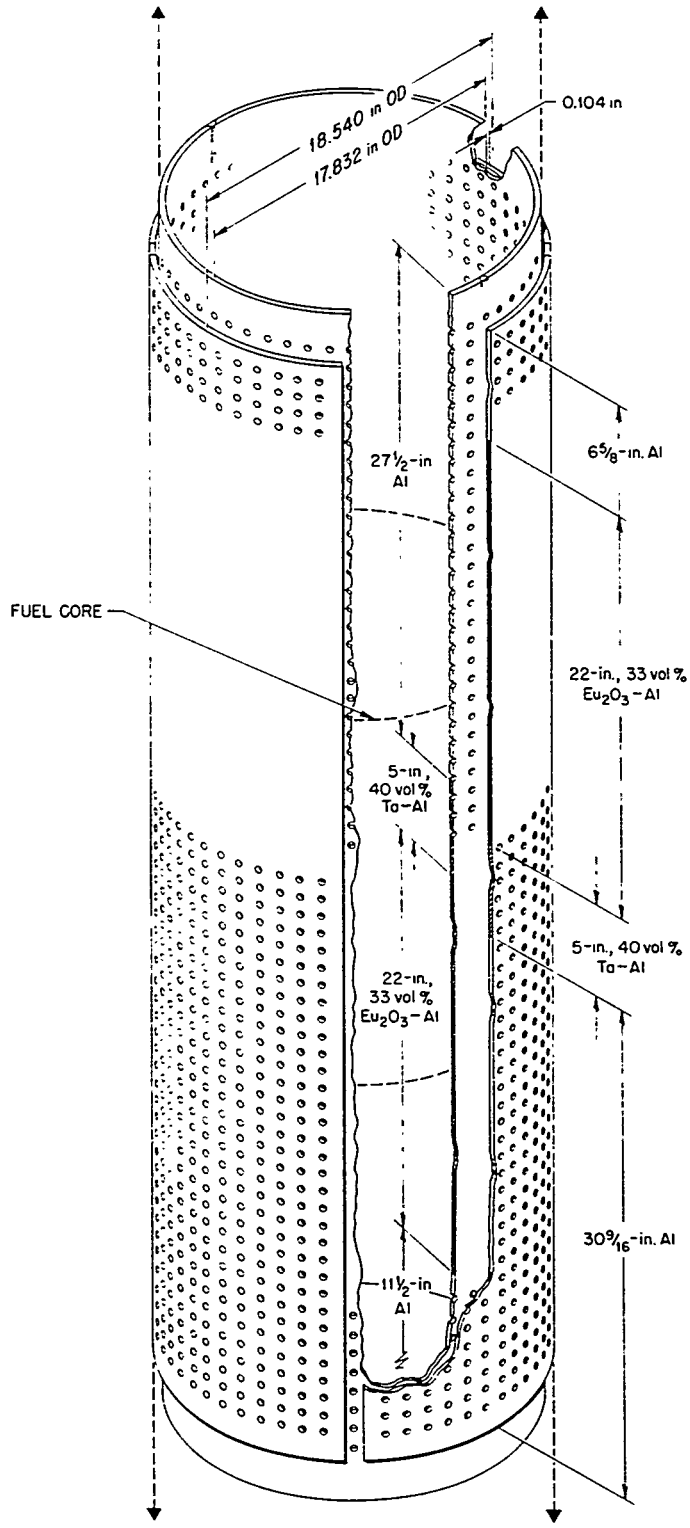

Fig. 5.2.8. Control Plates.

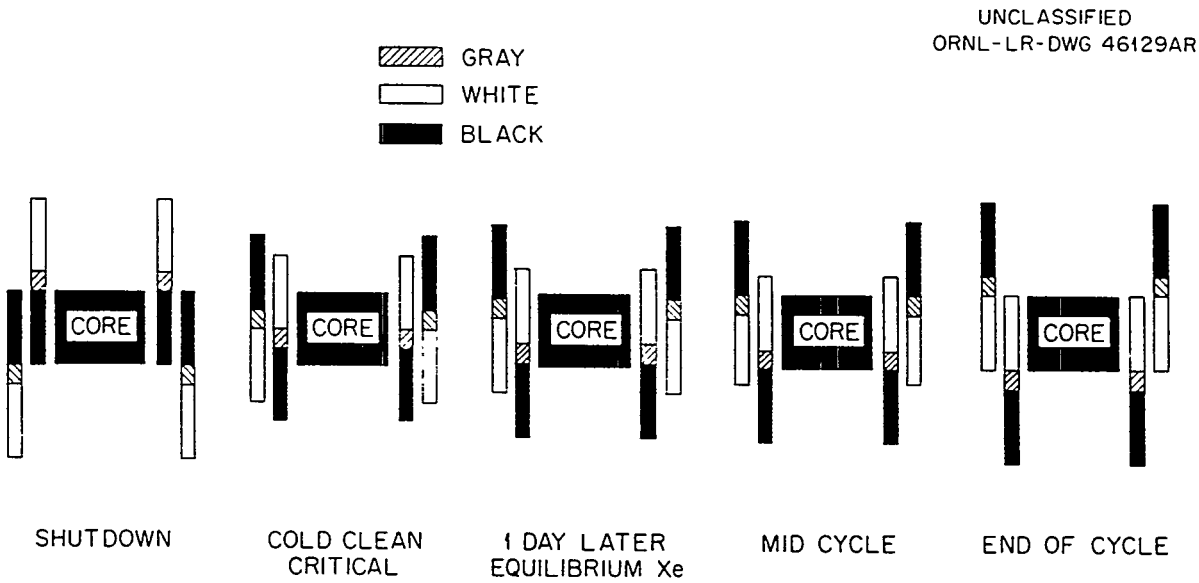

Fig. 5.2.9. Control Plate Positions During a Cycle.

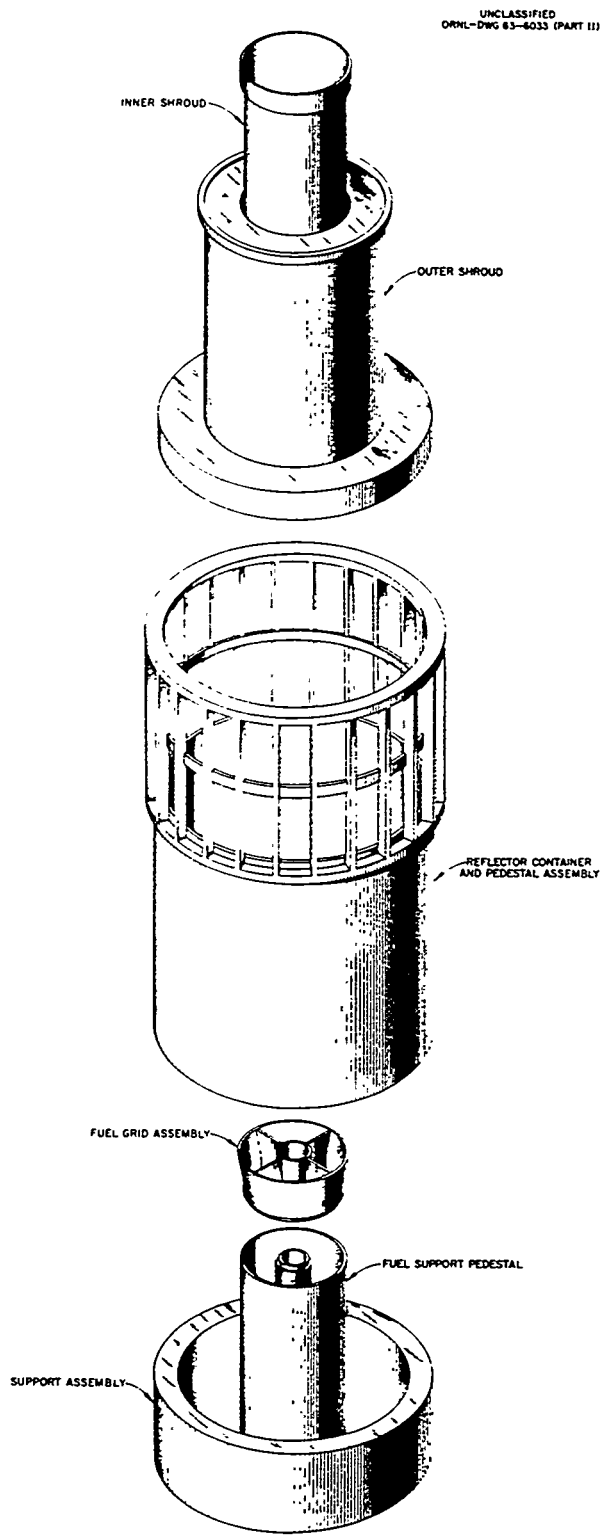

Fig. 5.3.1. Core and Reflector Support.

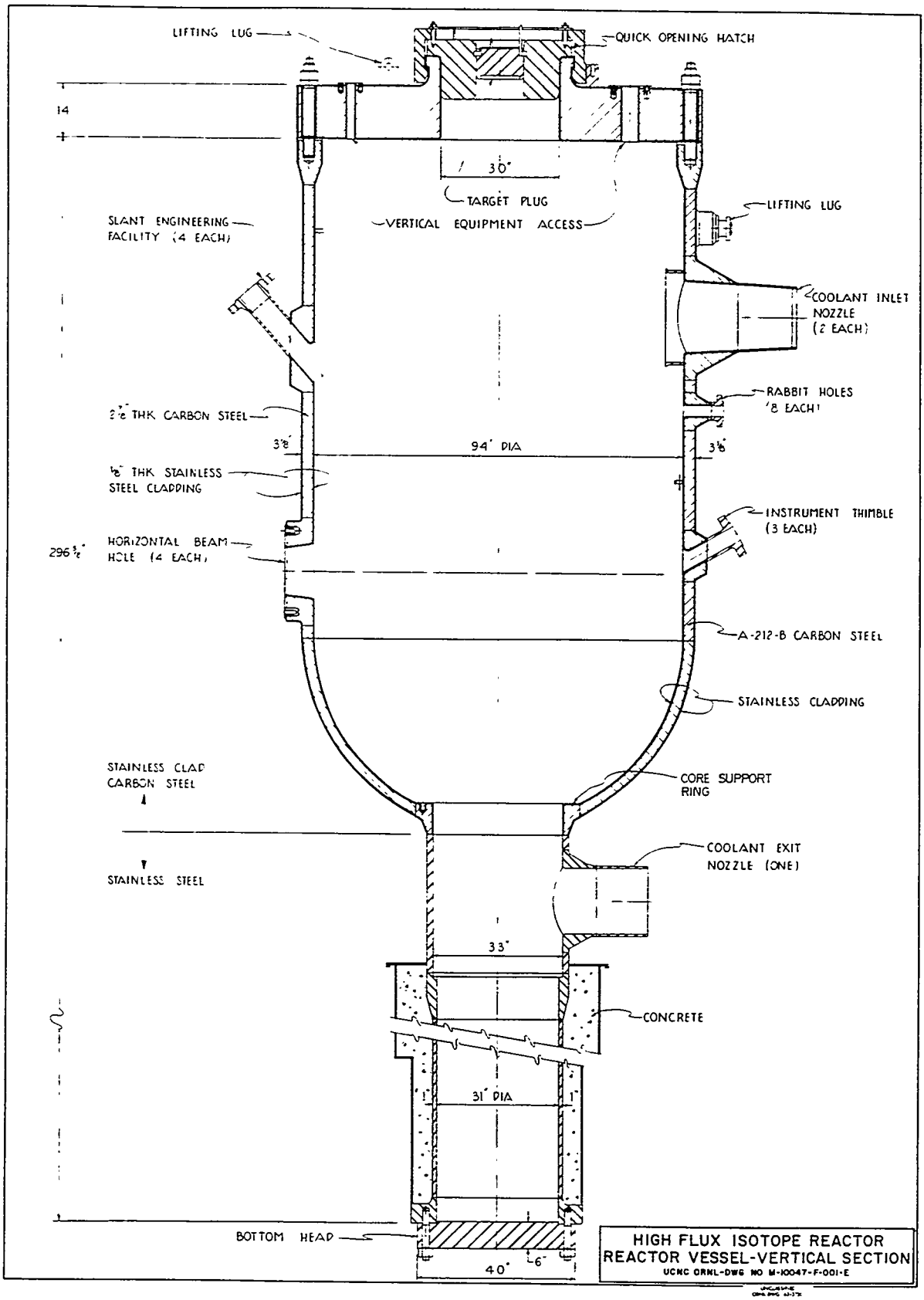

Fig. 5.4.1. Reactor Pressure Vessel.

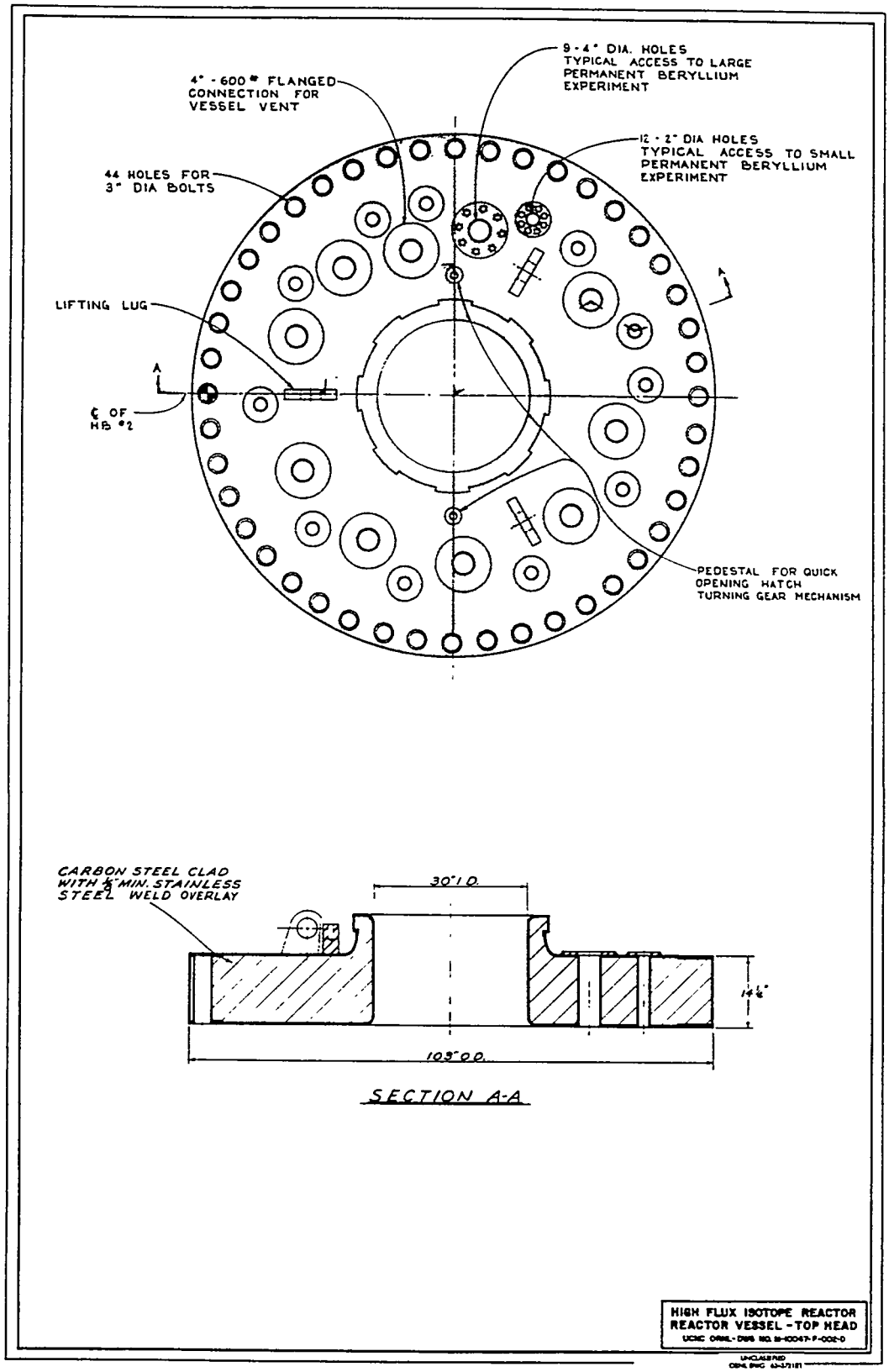

Fig. 5.4.2. Reactor Vessel Top Head.

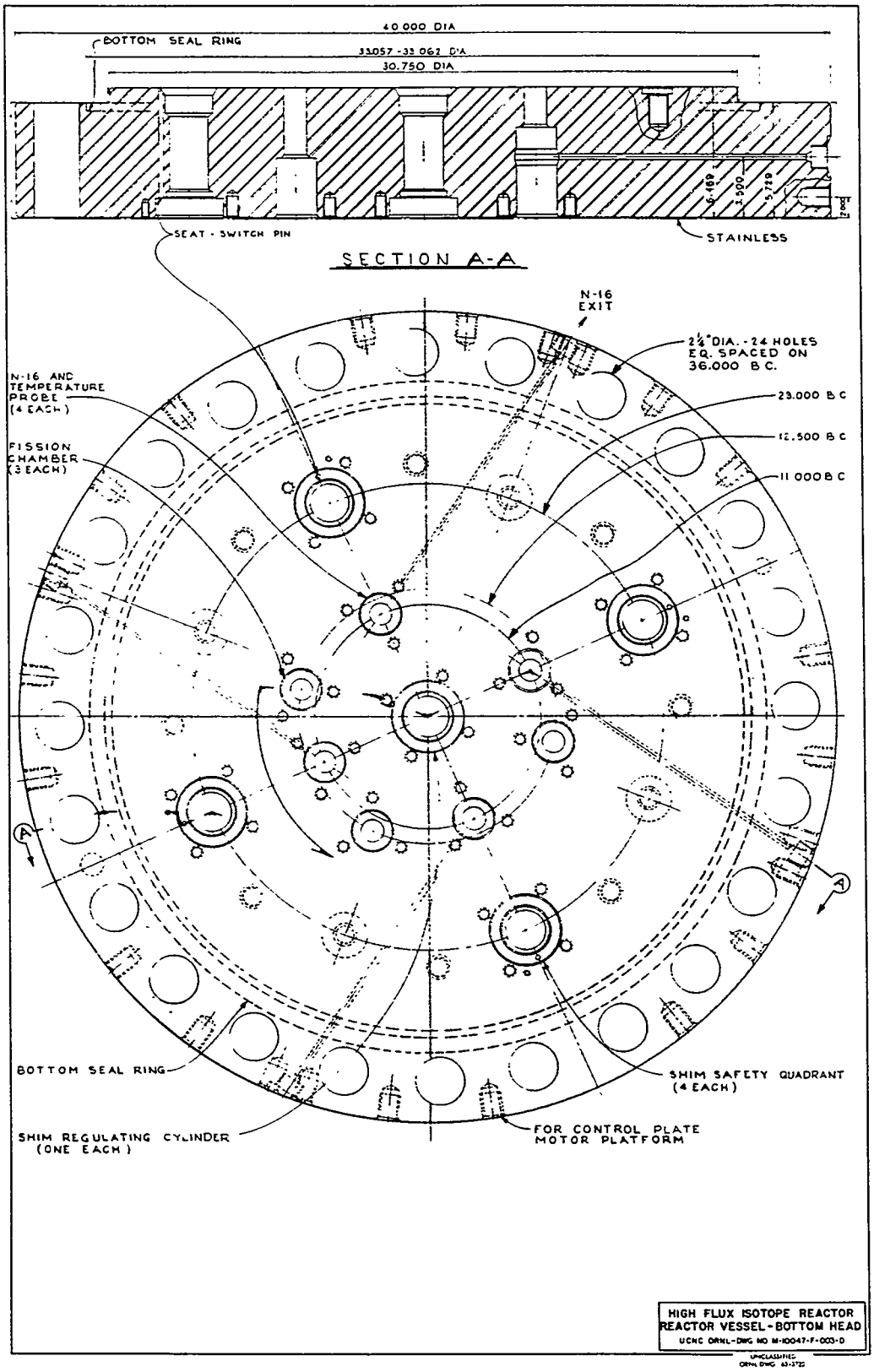

Fig. 5.4.3. Reactor Vessel Bottom Head.

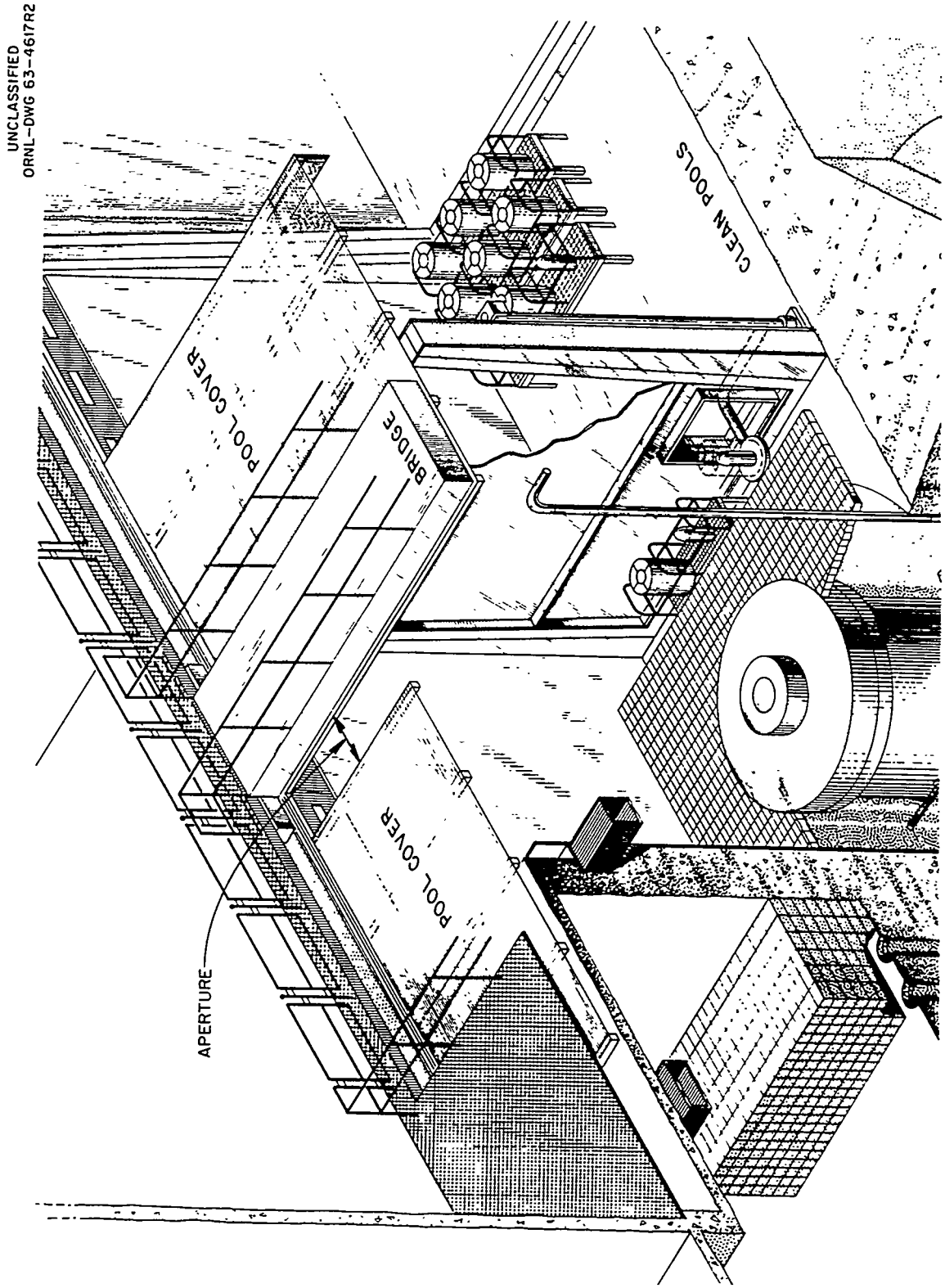

Fig. 5.5.1. Pool Cover and Personnel Bridge.

UNCLASSIFIED
ORNL-DWG 63-394

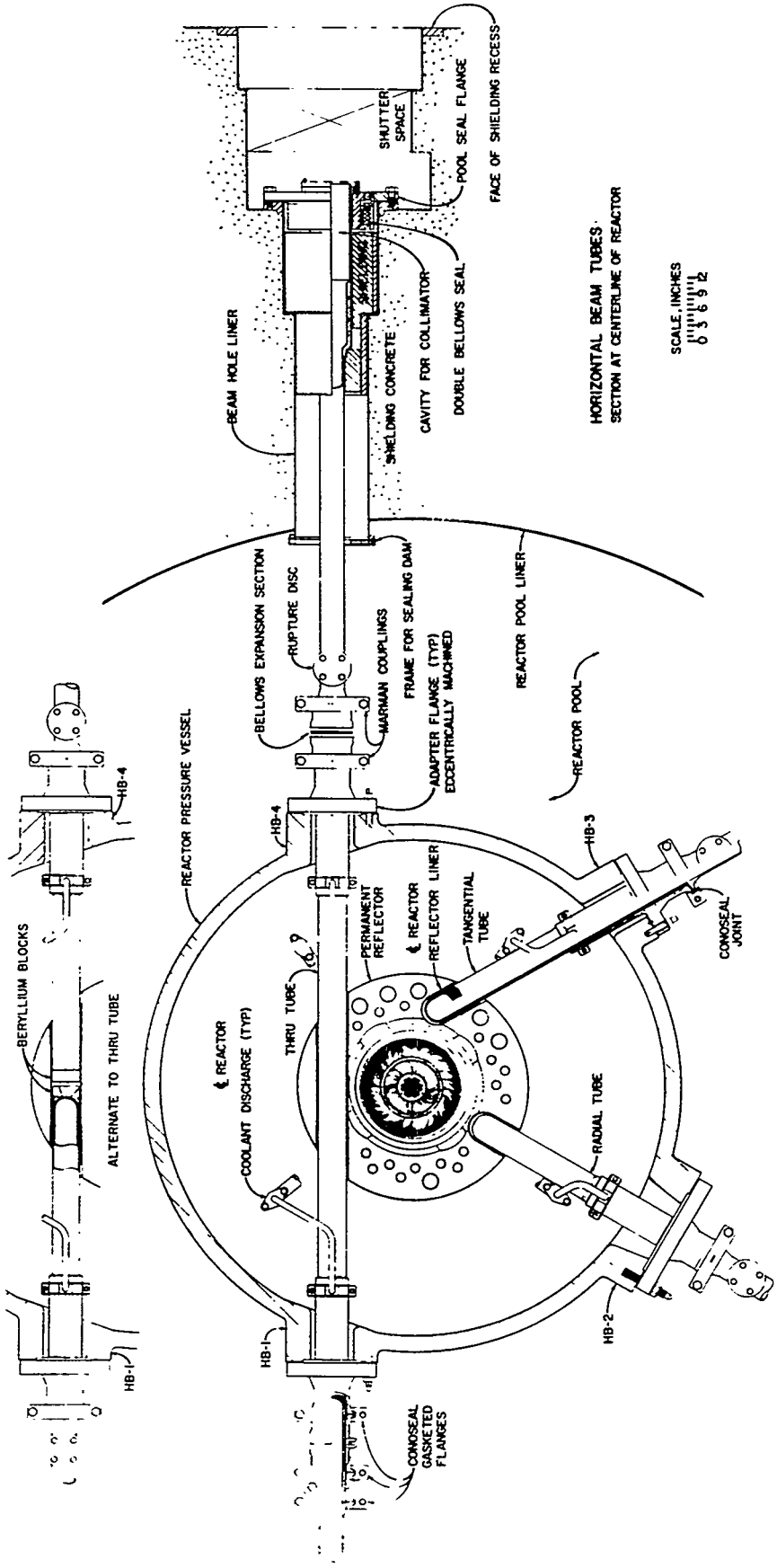

Fig. 5.6.1. Horizontal Beam Tubes.

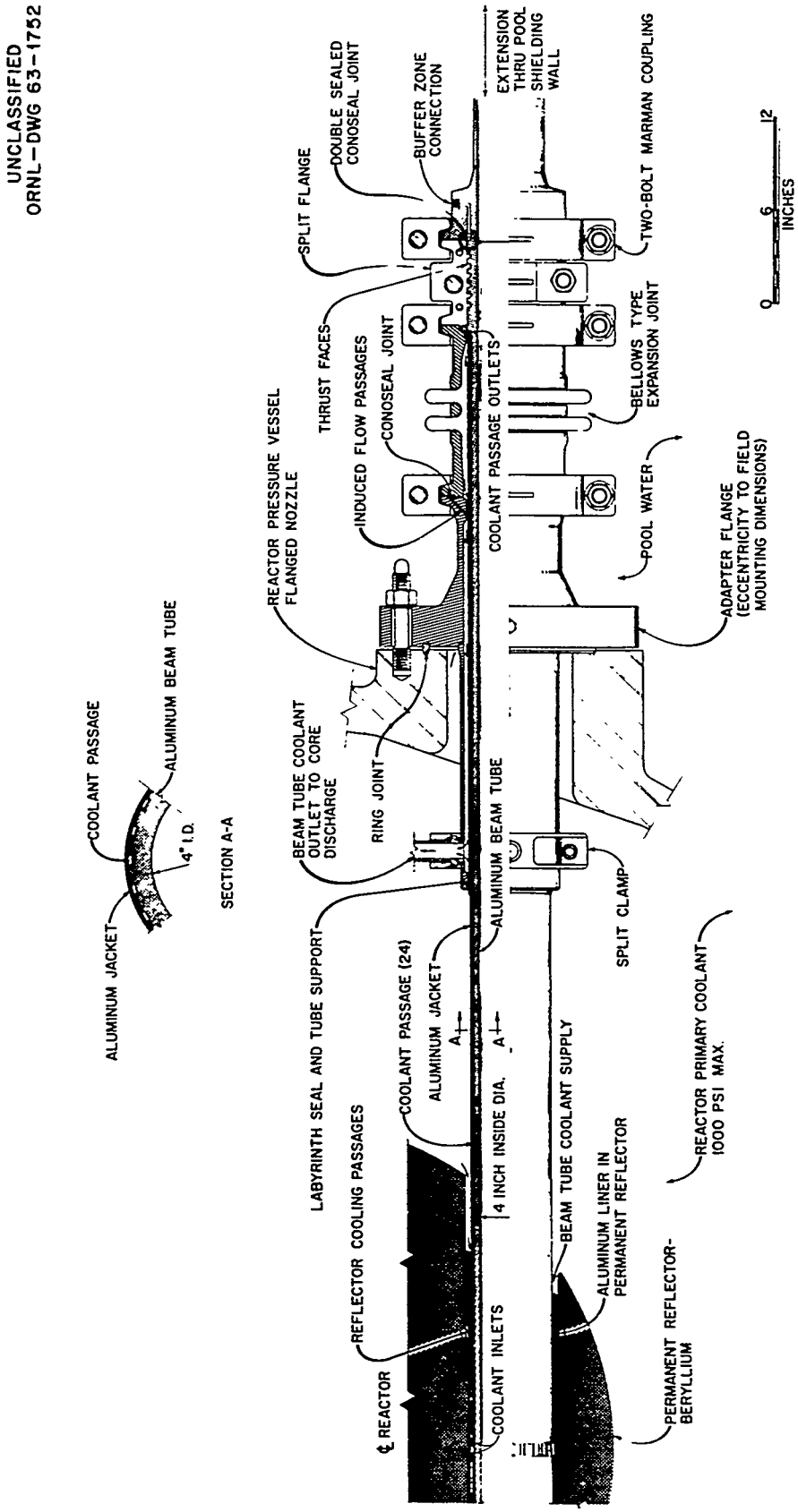

Fig. 5.6.2. Beam Tube Cooling.

UNCLASSIFIED
ORNL-DWG 63-957

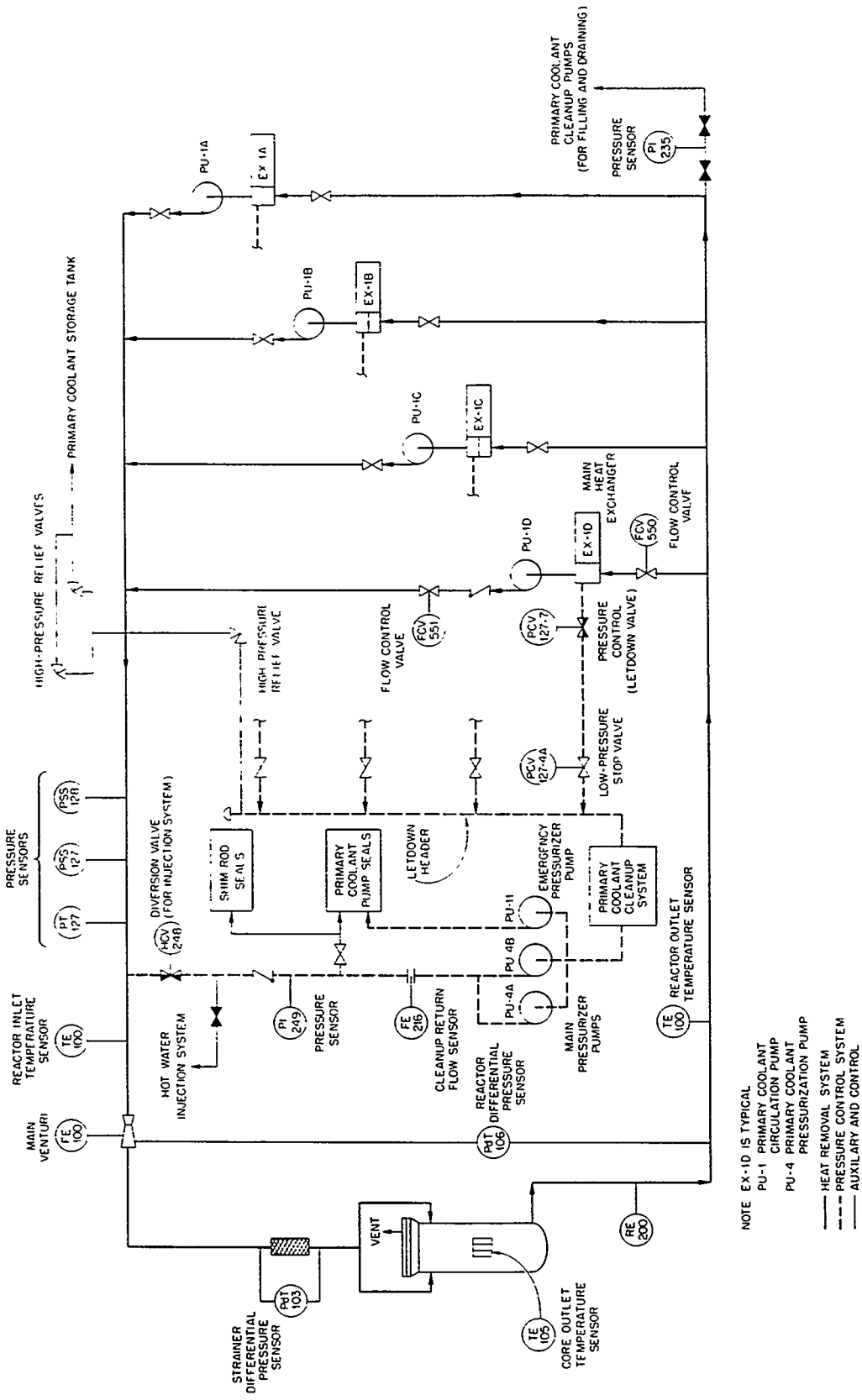

Fig. 6.2.1. Primary Coolant System.

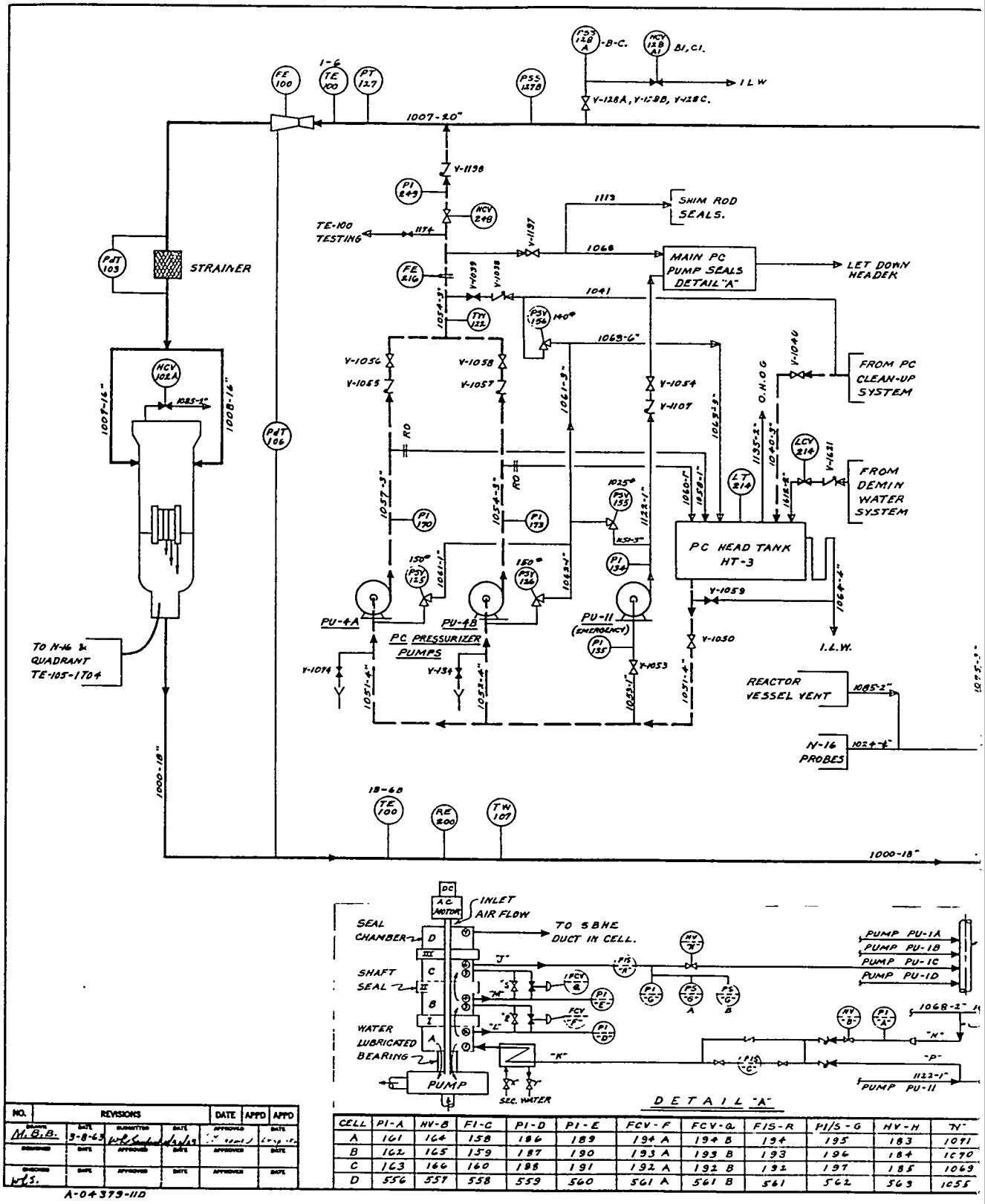

CELL	PI-A	HV-B	FI-C	PI-D	PI-E	FCV-F	FCV-Q	FIS-R	PI/S-G	HV-H	"N"
A	161	164	158	186	189	194 A	194 B	194	195	183	1071
B	162	165	159	187	190	193 A	193 B	193	196	184	1070
C	163	166	160	188	191	192 A	192 B	192	197	185	1069
D	556	557	558	559	560	561 A	561 B	561	562	563	1055

NO.	REVISIONS	DATE	APPD	APPD

A-04379-110

Fig. 6.2.2. Primary Coolant – Sche

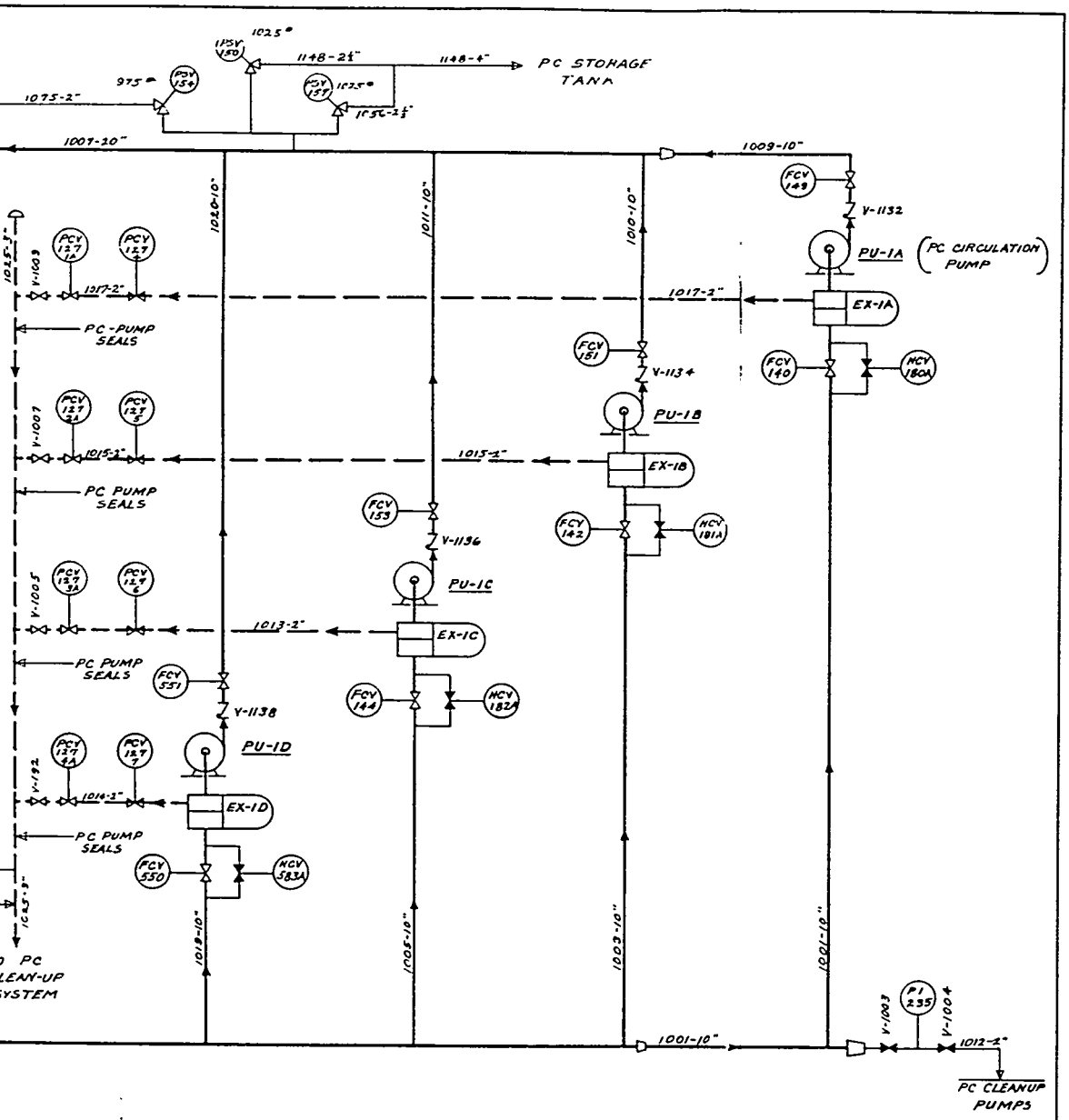

"P"	V-"X"	V-"Y"	"R"	"S"
1126	1495	1496		
1125	1493	1494		
1124	1491	1492		
1123	1524	1525		

atic Flow Diagram.

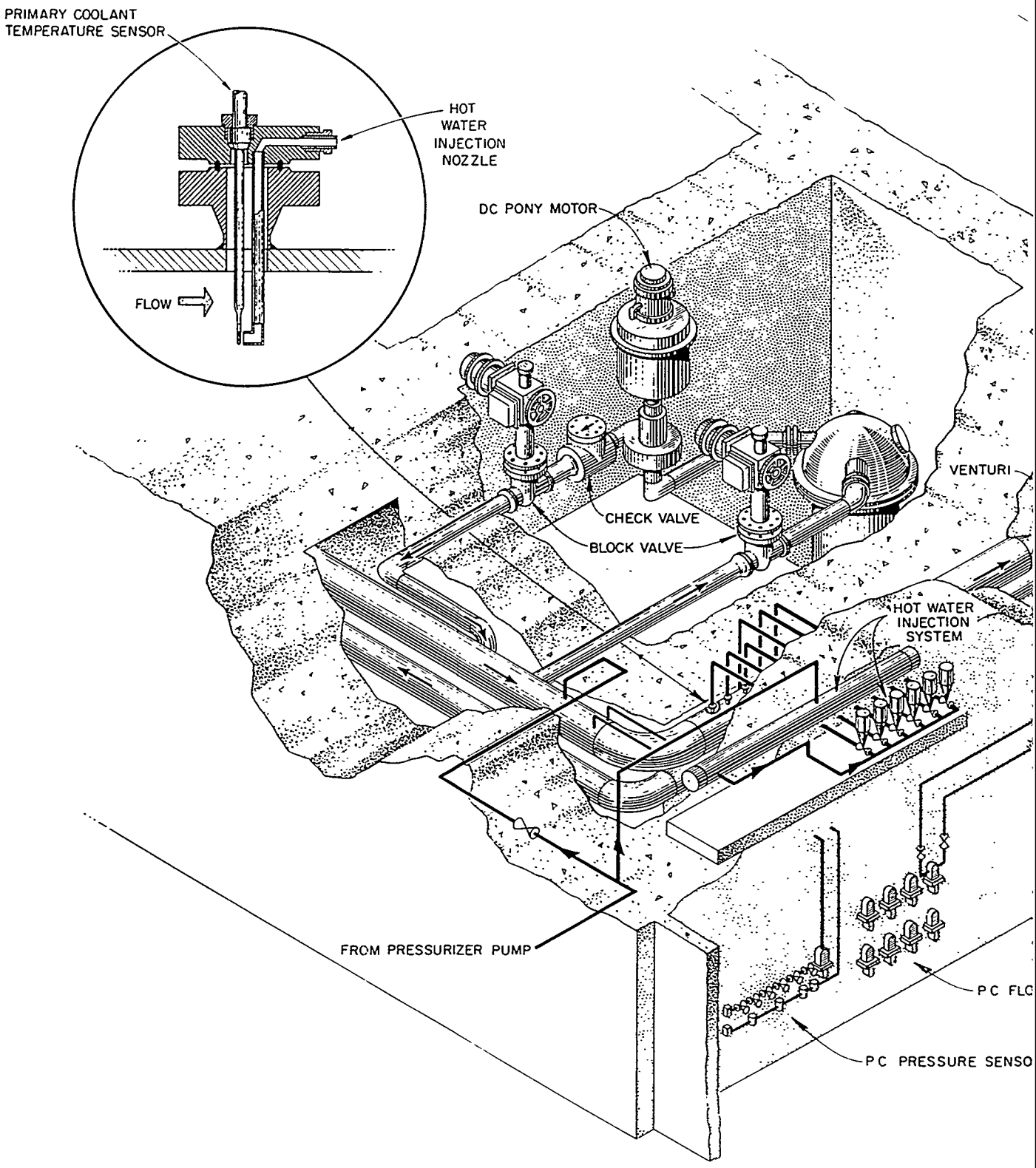

Fig. 6.2.3. Primary Coolar

UNCLASSIFIED
ORNL-LR-DWG 77801R2

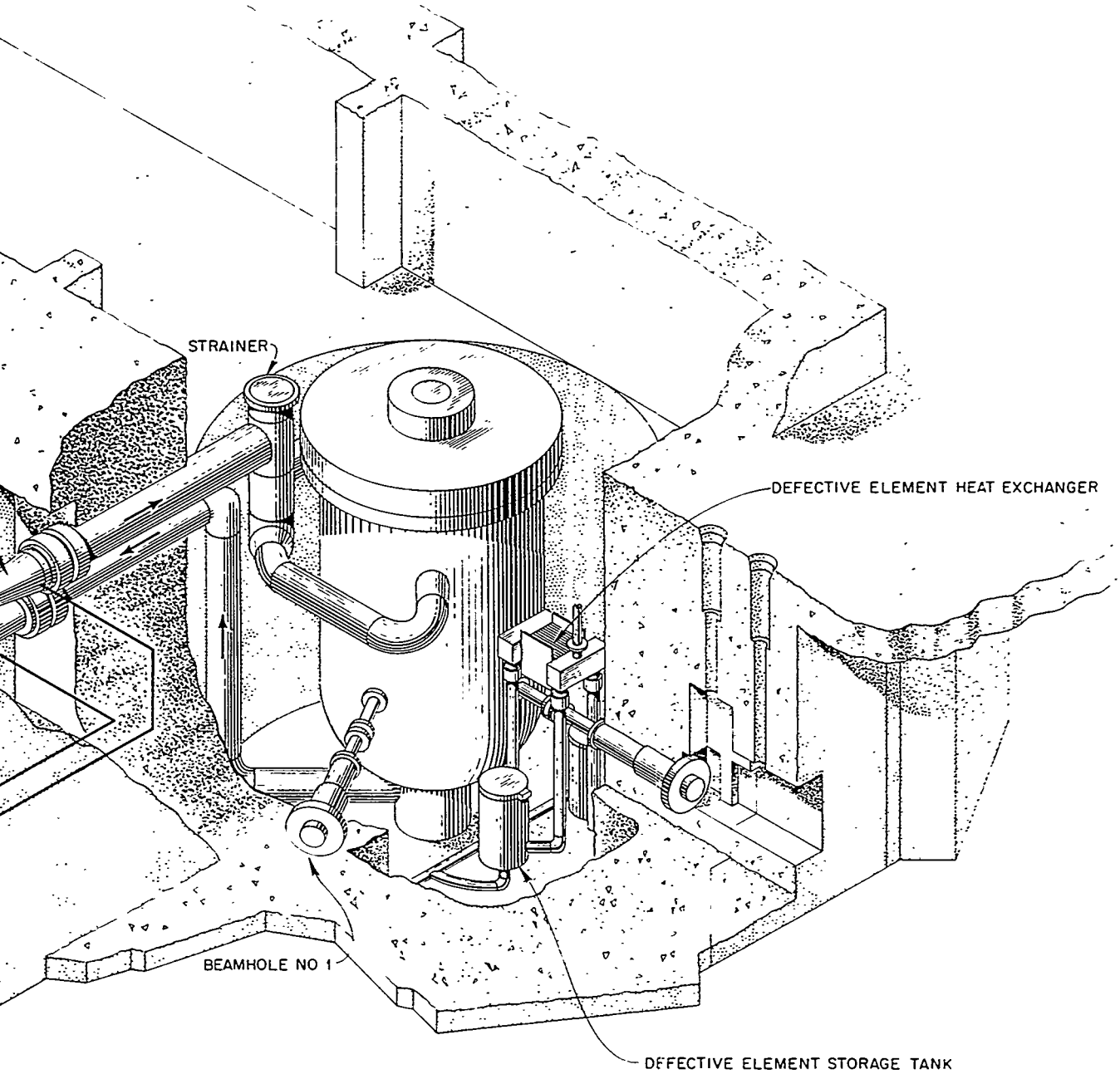

AND DIFFERENTIAL PRESSURE SENSORS

Equipment Arrangement.

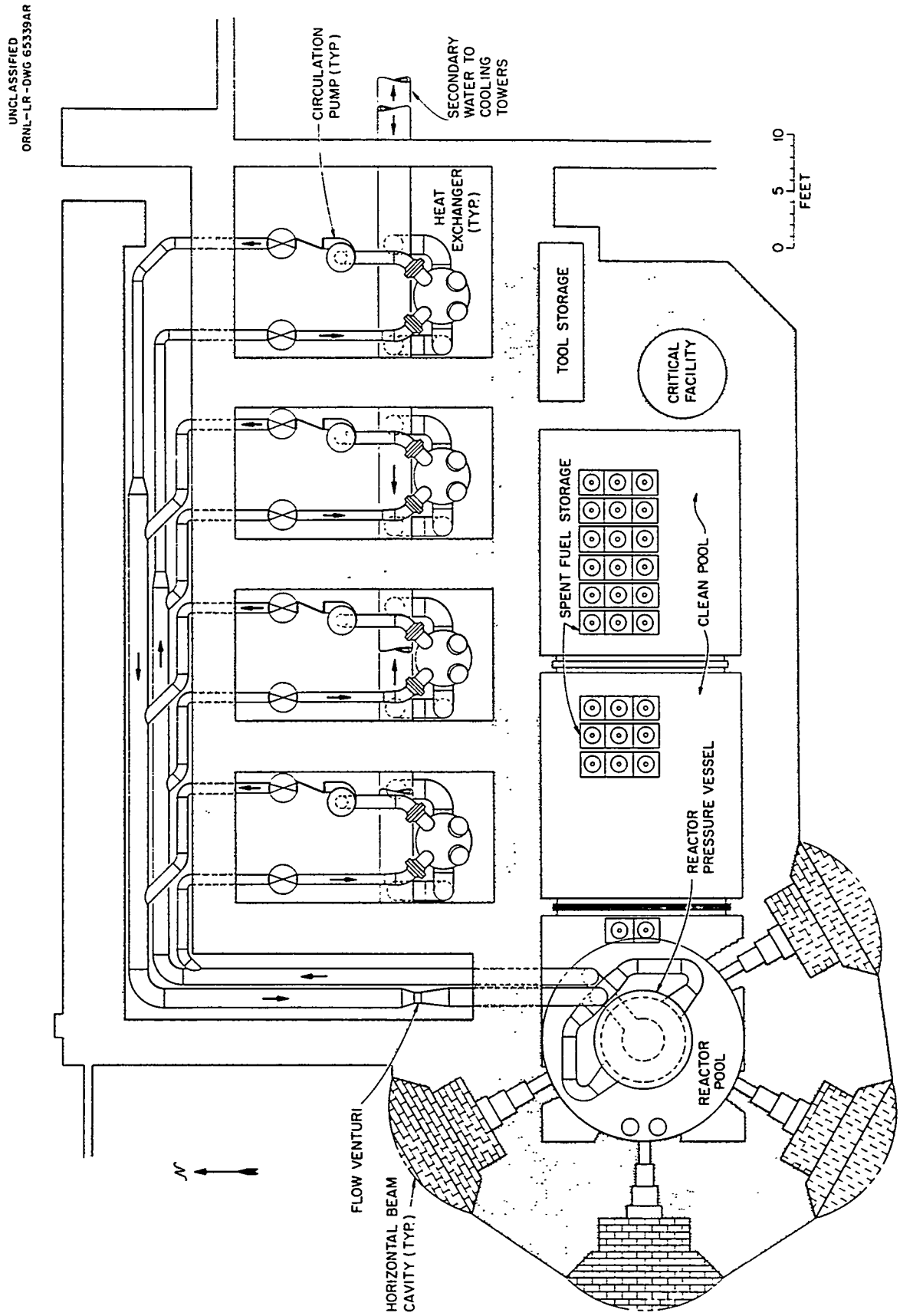

Fig. 6.2.4. Reactor Shield, Heat Exchanger Cells, and Pool Structures – Horizontal Section.

UNCLASSIFIED
ORNL-LR-DWG 65338A

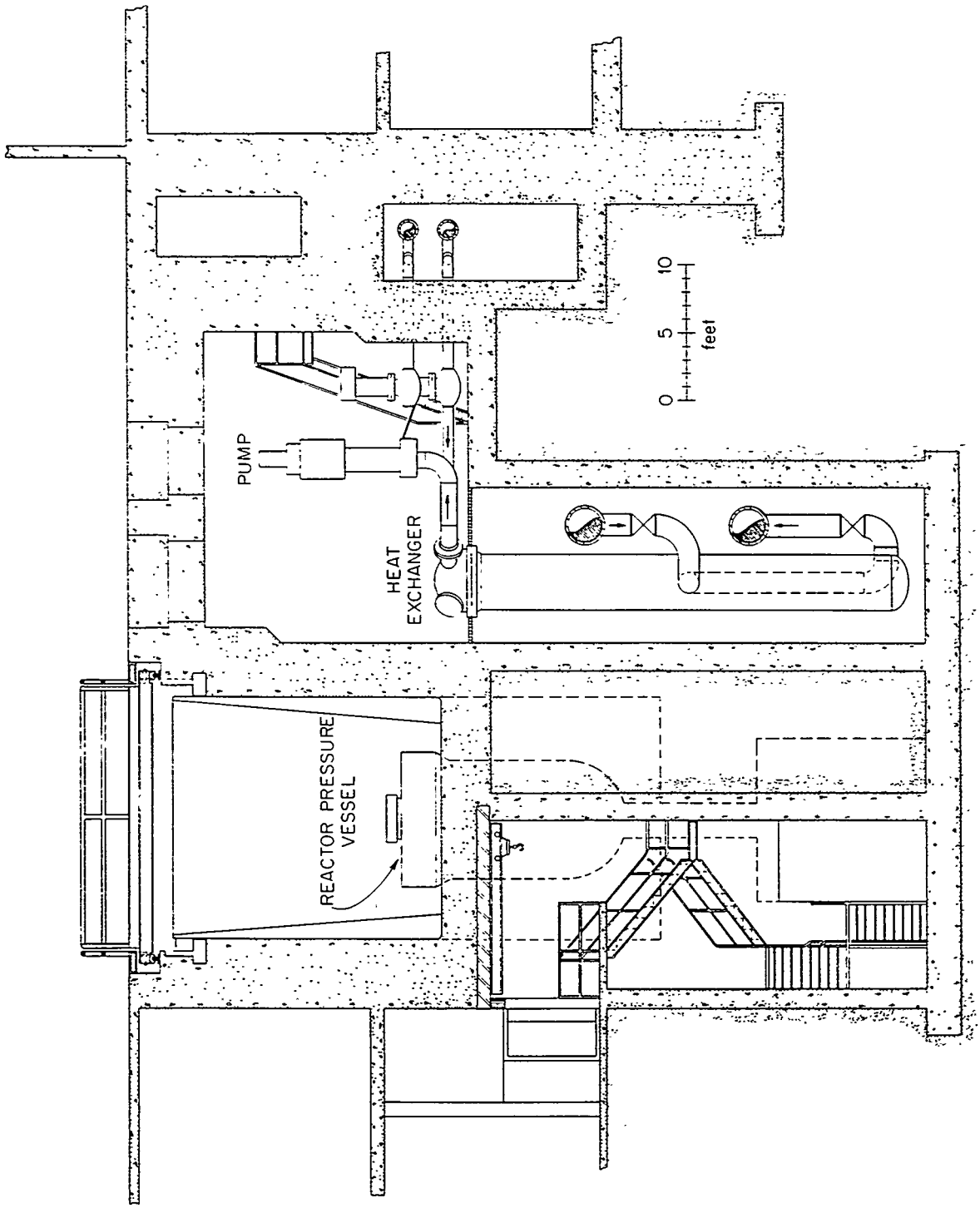

Fig. 6.2.5. Heat Exchanger Cell and Pool Structure – Vertical Section.

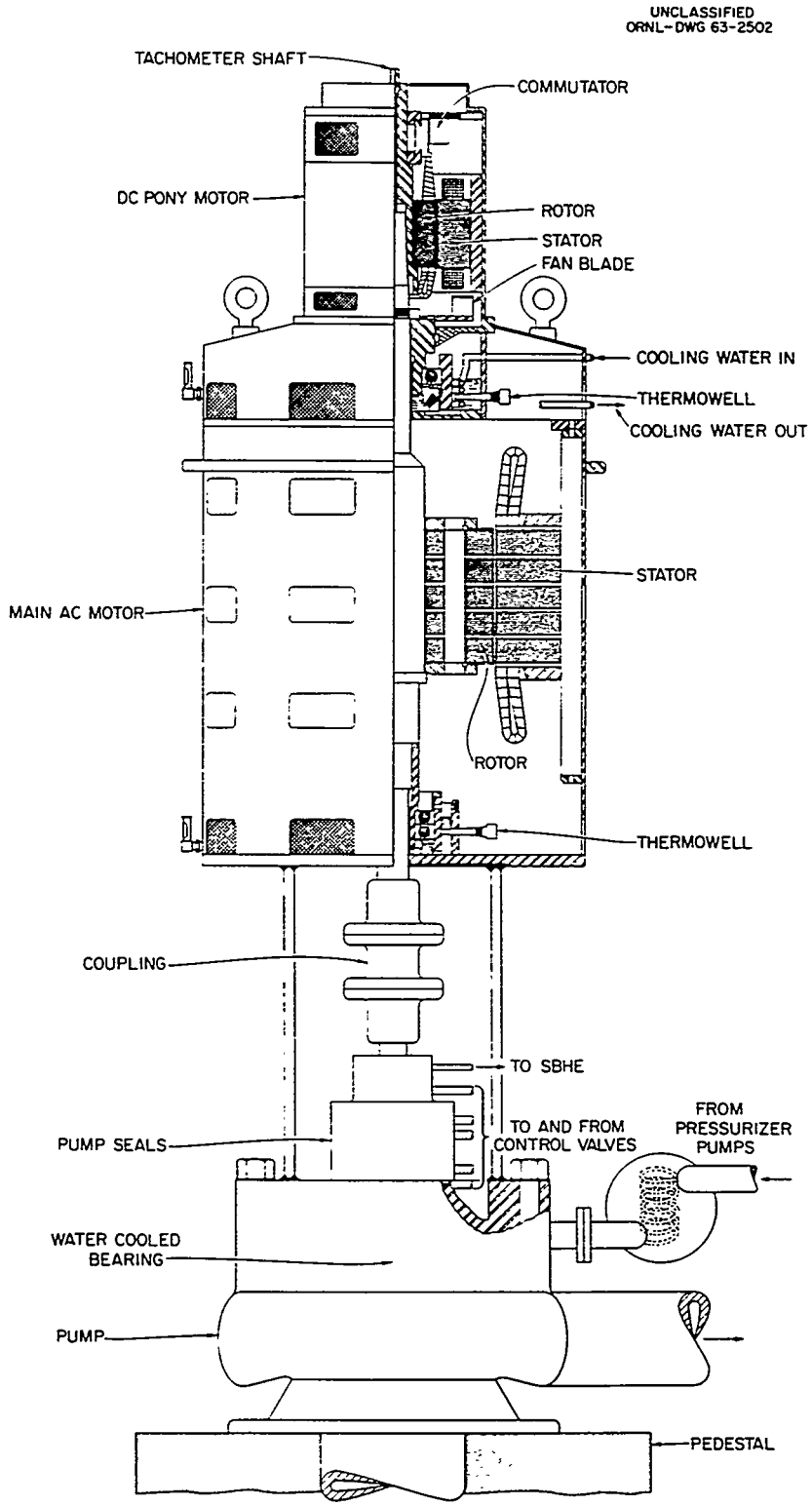

Fig. 6.2.6. Primary Coolant Pump Motors.

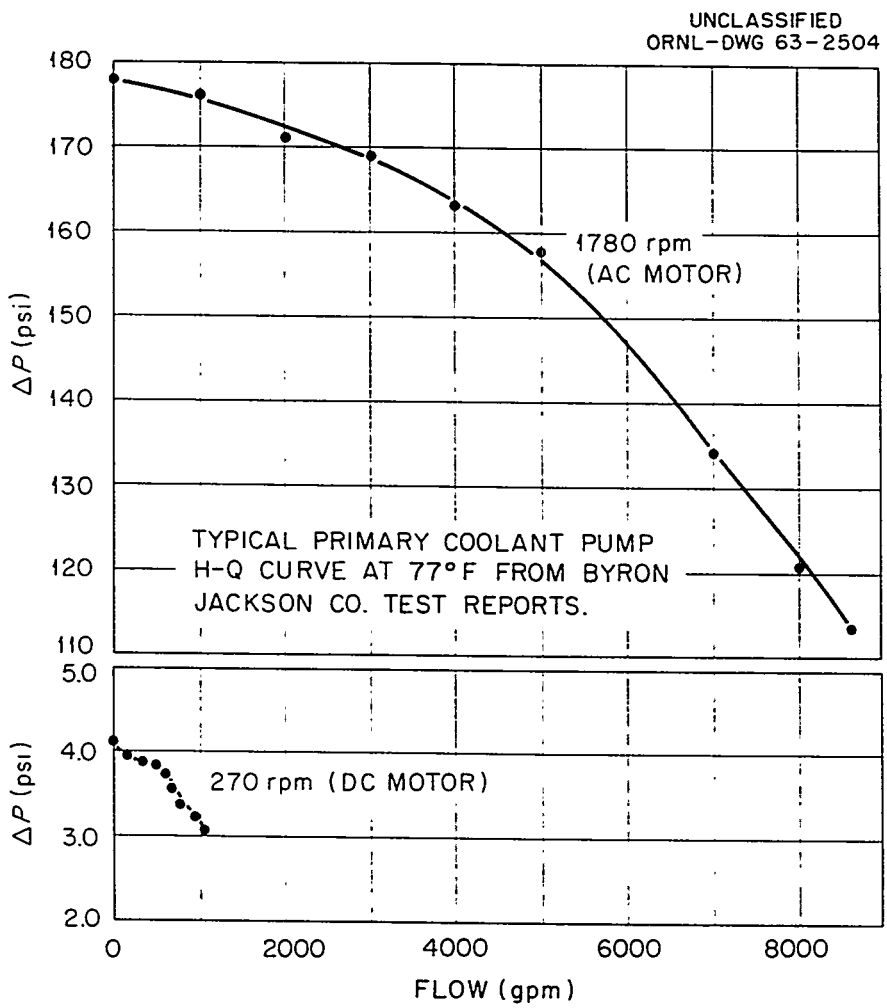

Fig. 6.2.7. Characteristic Curves for Primary Coolant Pumps.

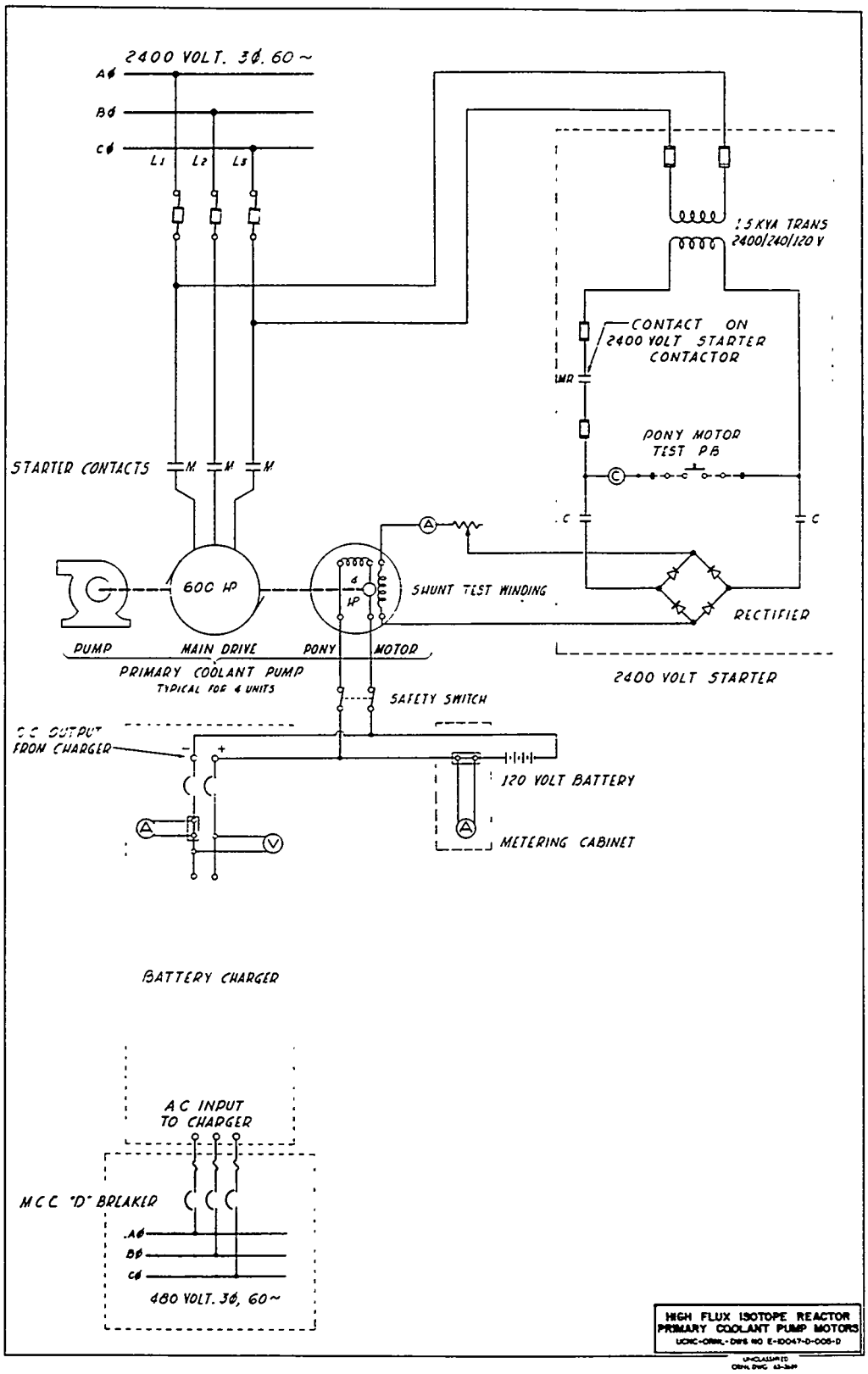

Fig. 6.2.8. Primary Coolant Pump Motor Test Circuits.

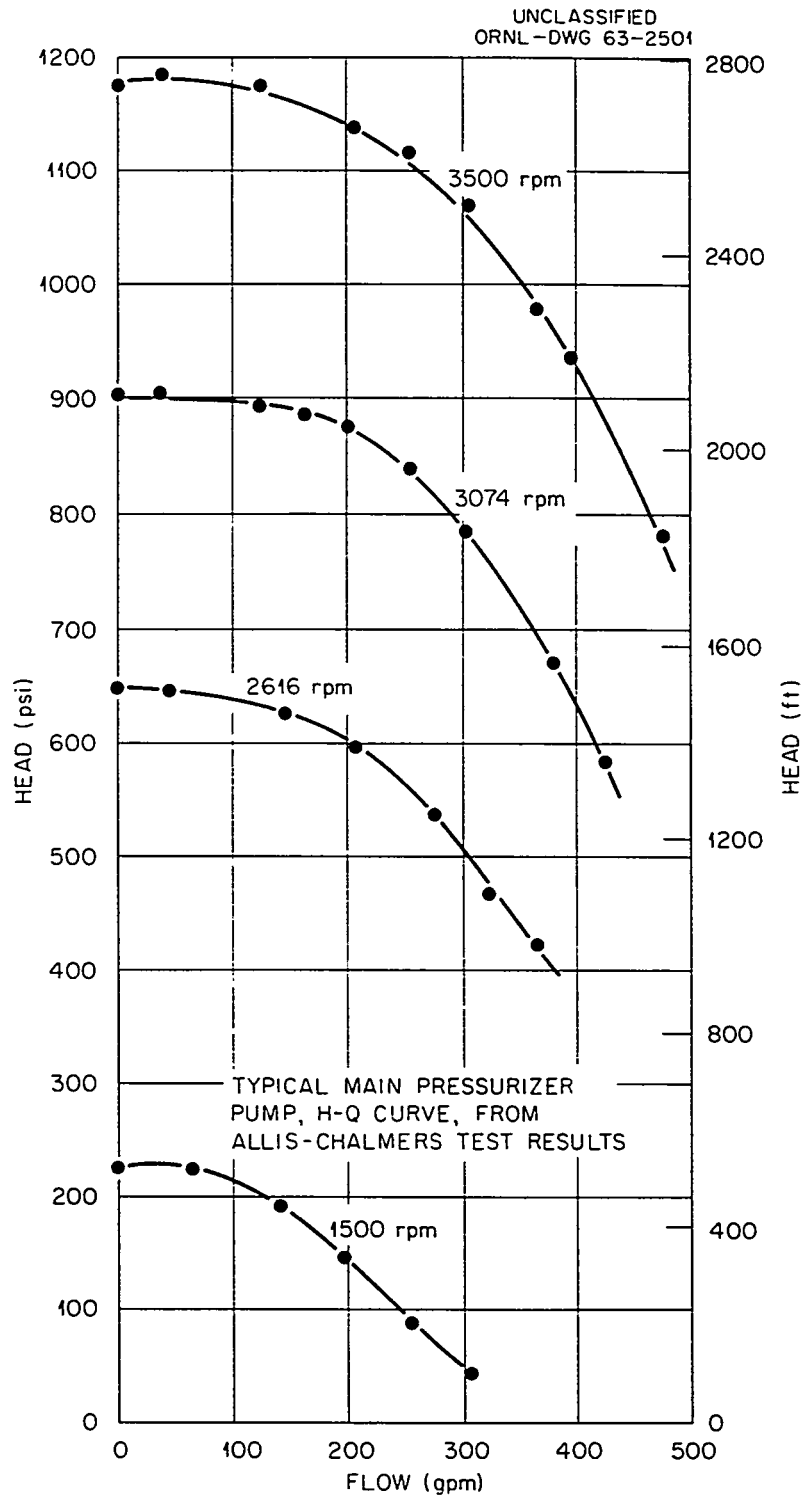

Fig. 6.2.9. Characteristic Curves for Main Pressurizer Pump.

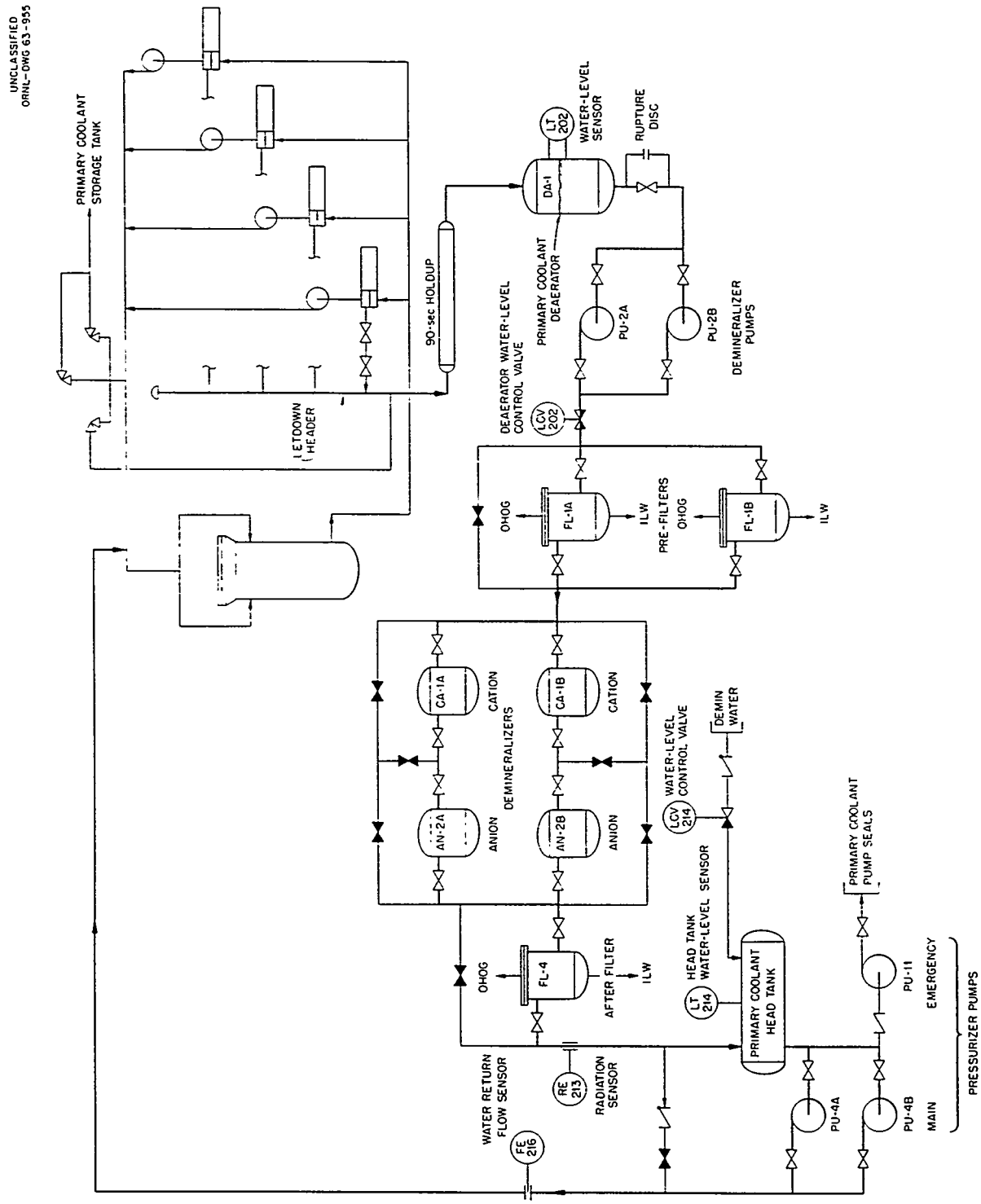

Fig. 6.2.10. Primary Coolant Cleanup System.

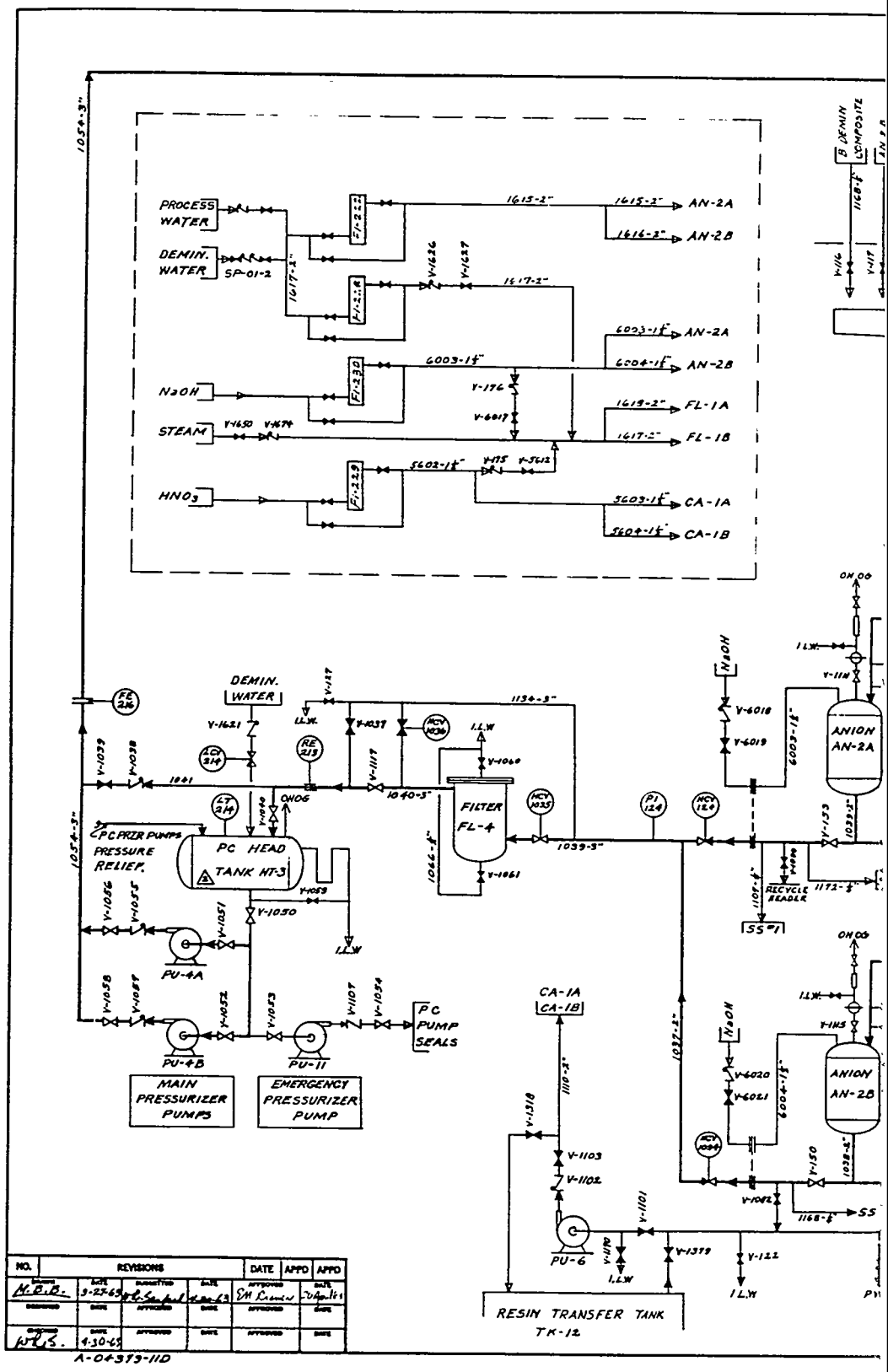
PROCESS WATER
DEMIN. WATER
SP-01-2
NaOH
STEAM
HNO3
AN-2A
AN-2B
FL-1A
FL-1B
CA-1A
CA-1B
DEMIN. WATER
PC HEAD TANK HT-3
FILTER FL-4
PC PRZR PUMPS PRESSURE RELIEF
PU-4A
PU-4B
PU-11
MAIN PRESSURIZER PUMPS
EMERGENCY PRESSURIZER PUMP
PC PUMP SEALS
ANION AN-2A
ANION AN-2B
RECYCLE HEADER
PU-6
RESIN TRANSFER TANK TK-12
REVISIONS
DATE
APPD
A-04373-11D

Fig. 6.2.11.

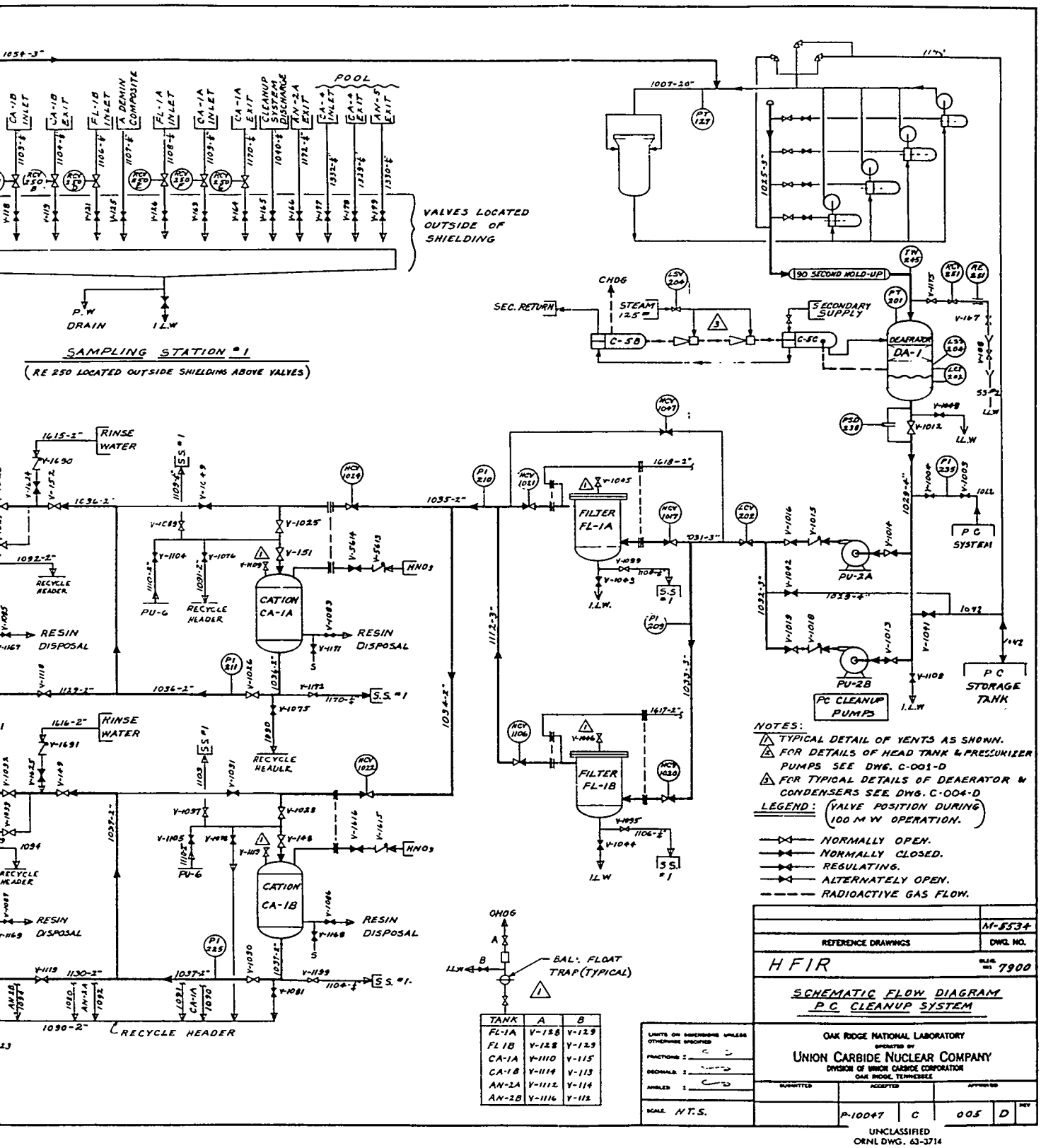

TANK	A	B
FL-1A	V-128	V-129
FL 1B	V-128	V-129
CA-1A	V-1110	V-115
CA-1B	V-1114	V-113
AN-2A	V-1112	V-114
AN-2B	V-1116	V-112

Primary Coolant Cleanup — Schematic Flow Diagram.

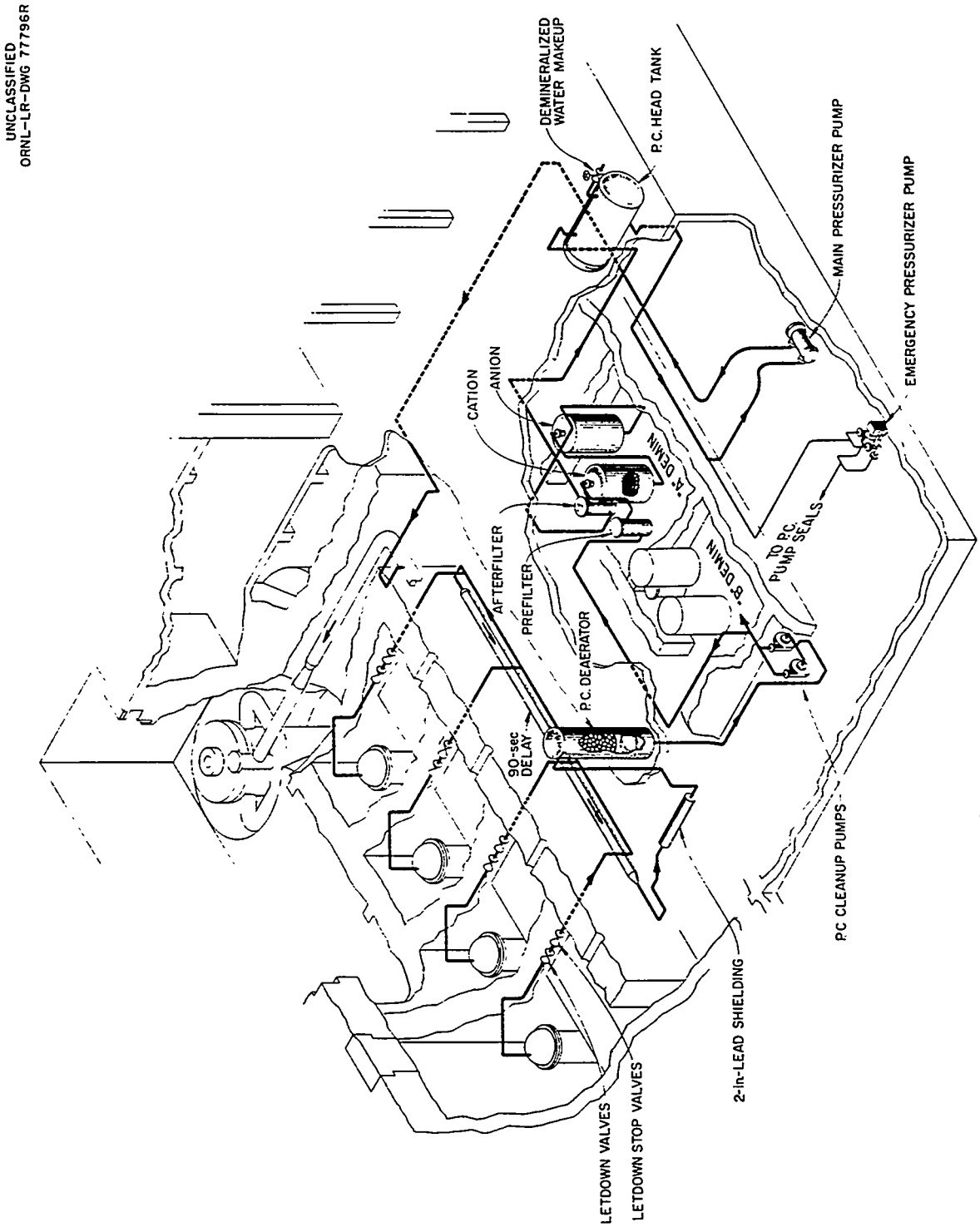

Fig. 6.2.12. Primary Coolant Cleanup Equipment Arrangement.

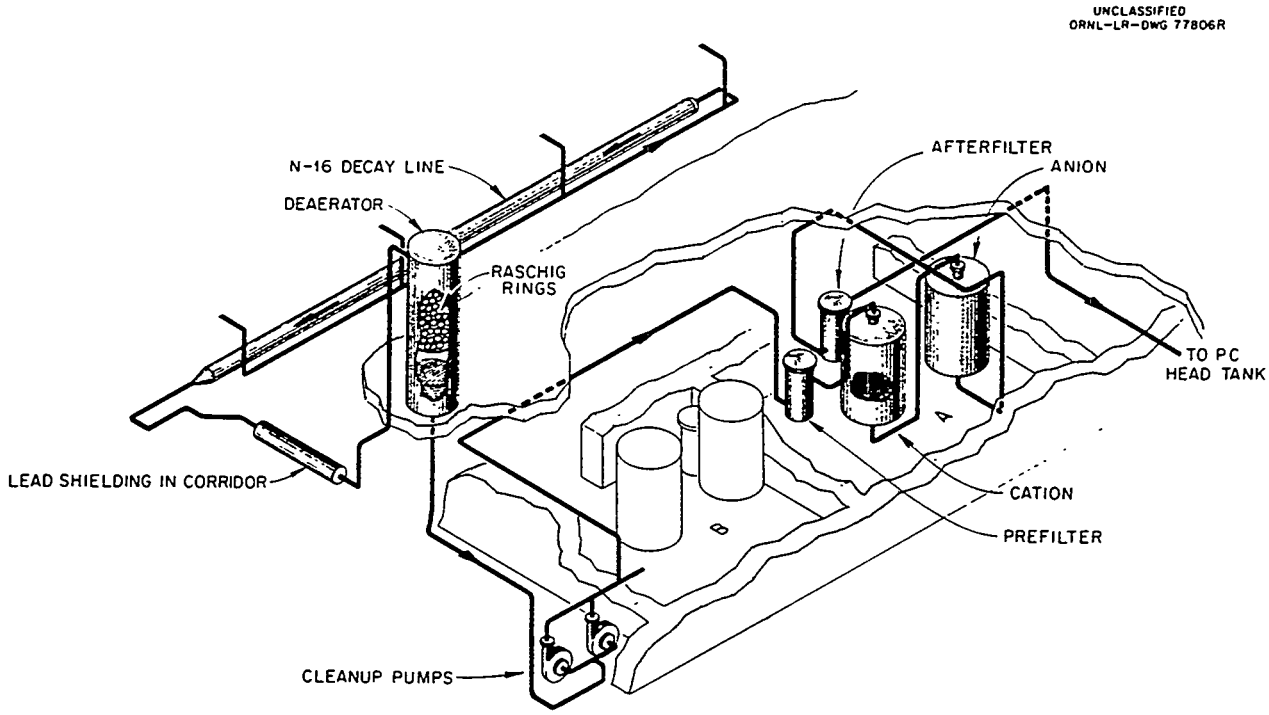

Fig. 6.2.13. Primary Coolant Cleanup System Details.

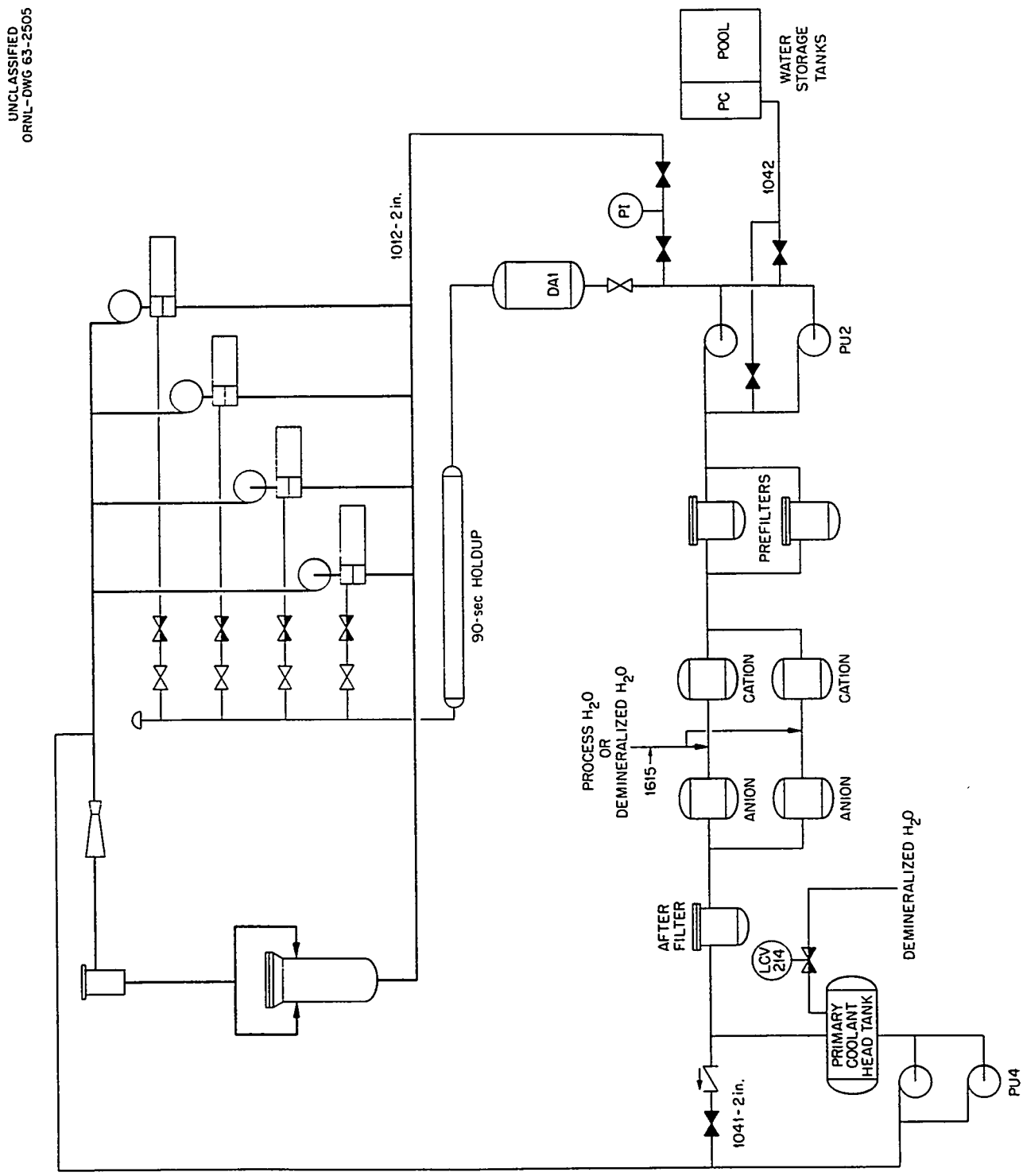

Fig. 6.2.14. Primary Water Replacement.

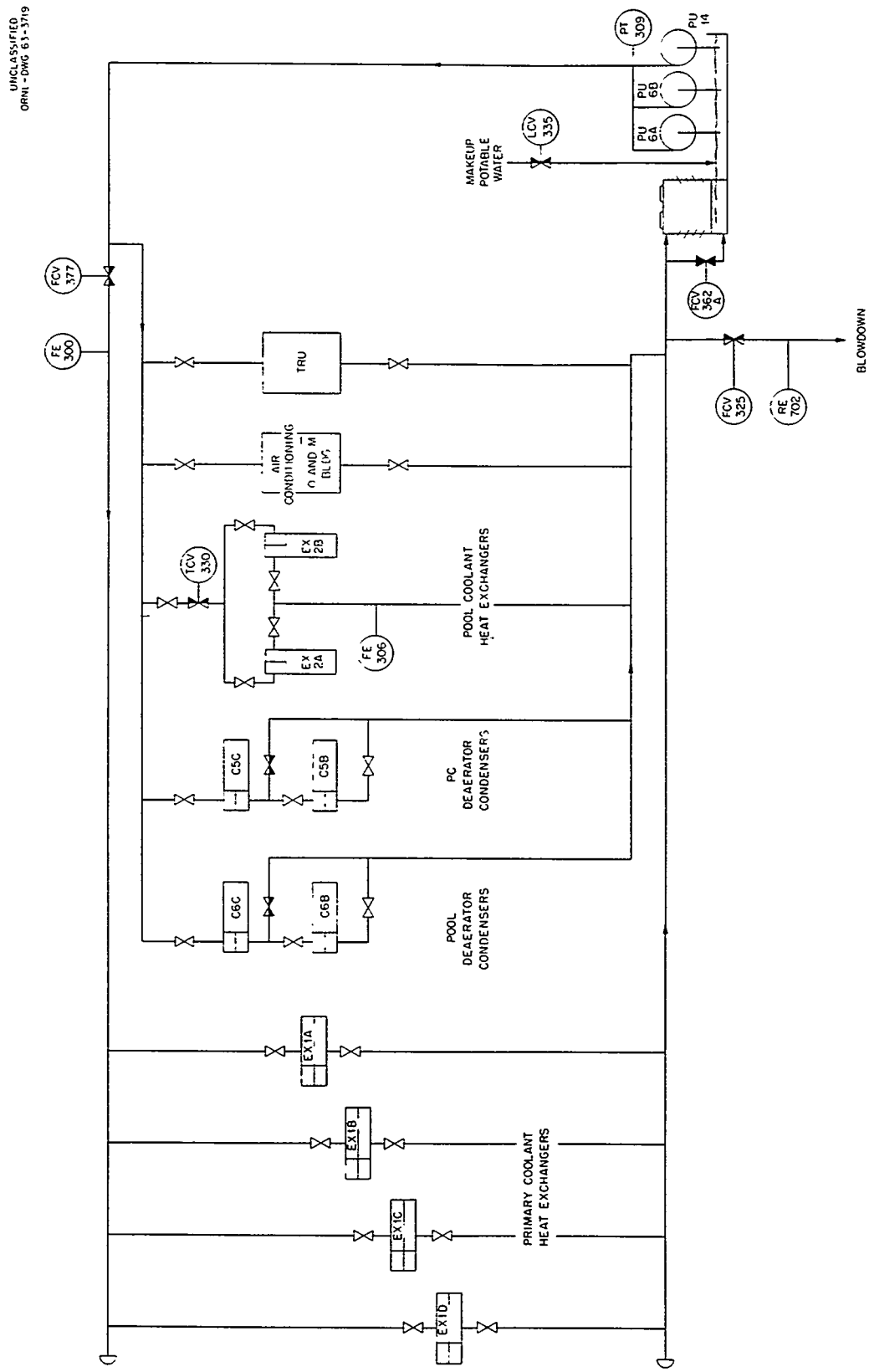

Fig. 6.3.1. Secondary Coolant System.

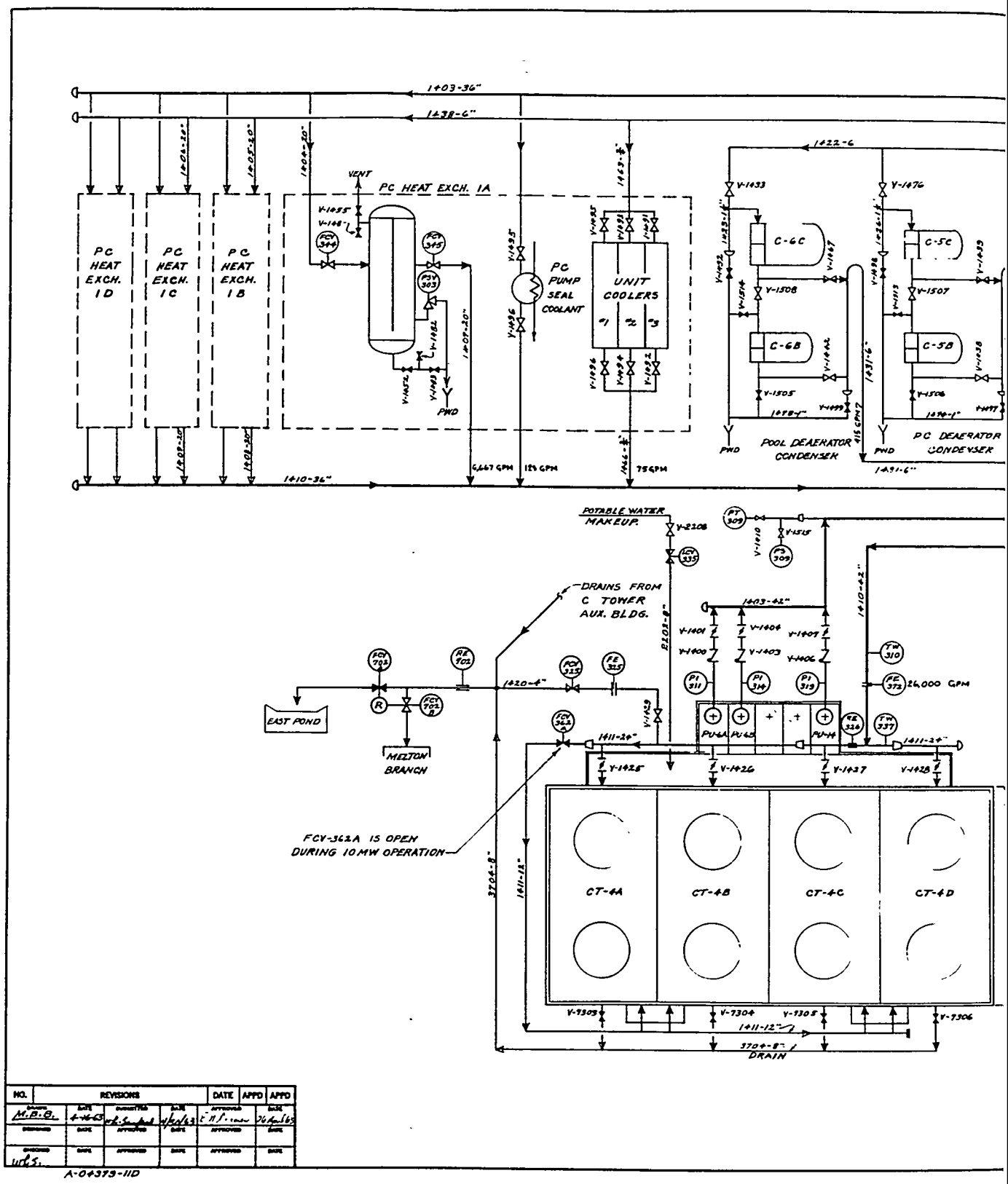

Fig. 6.3.2. Secondary Coolant – Schema

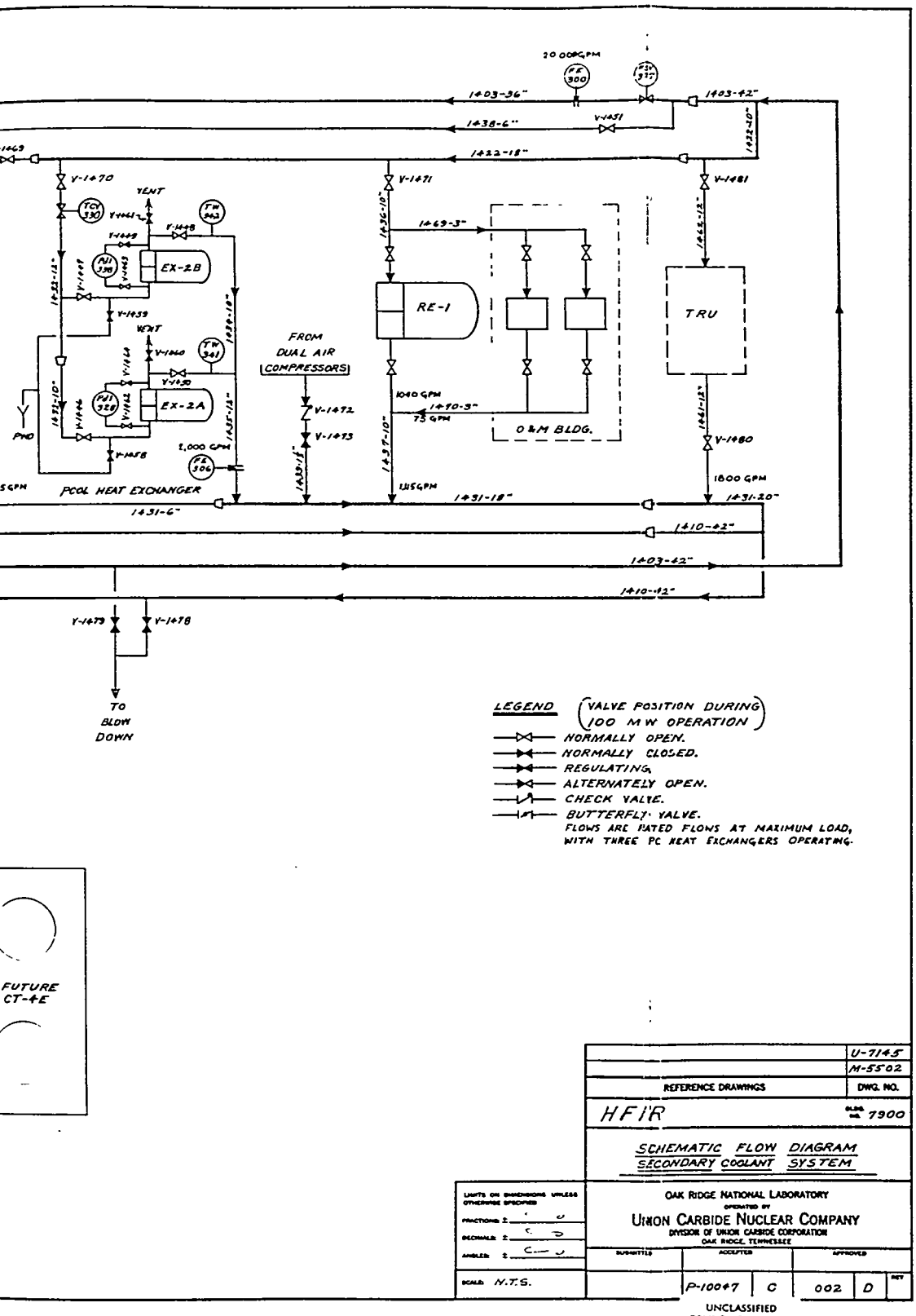

Flow Diagram.

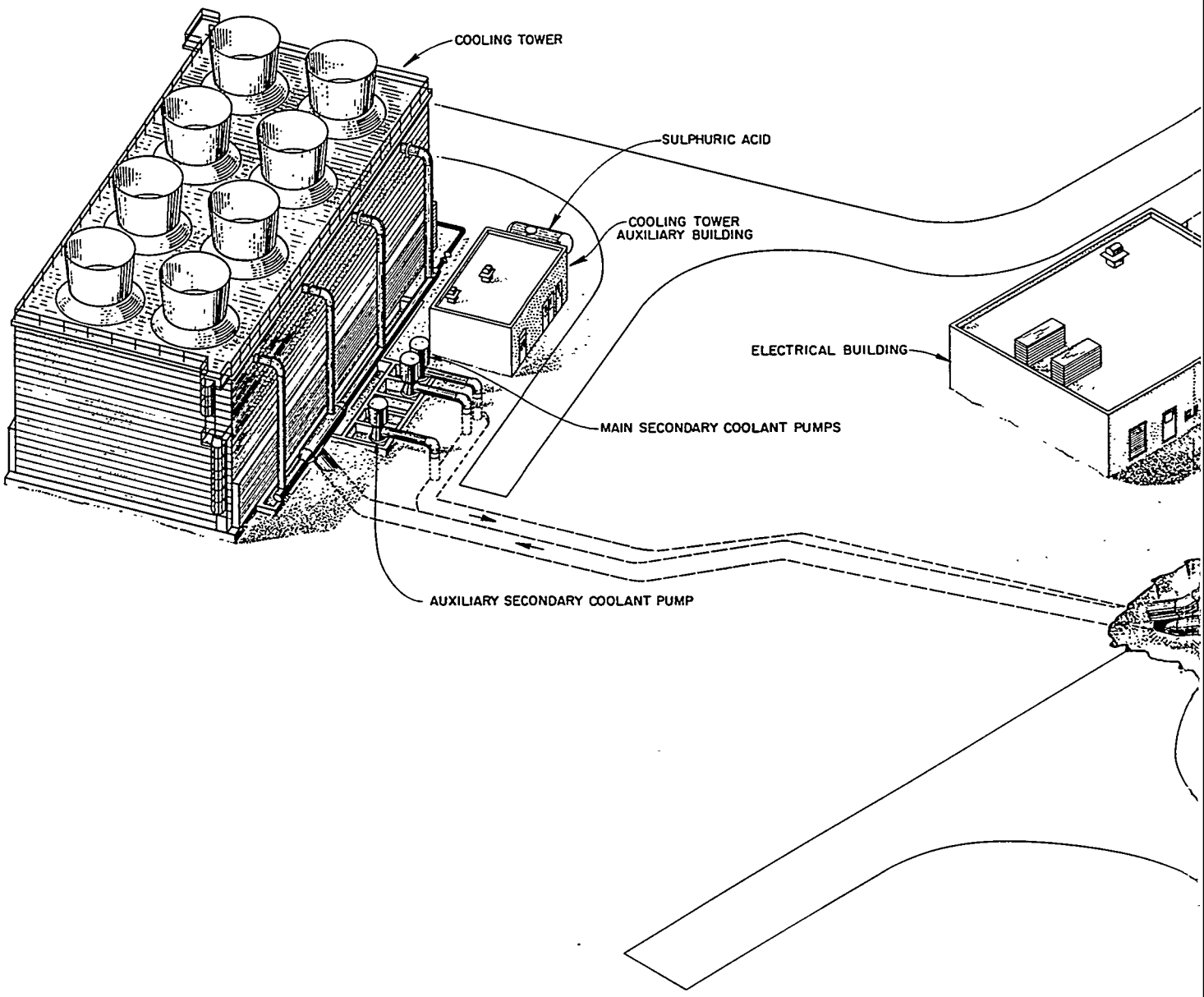

Fig. 6.3.3. Secondary Coolant

UNCLASSIFIED
ORNL-LR-DWG 77791R

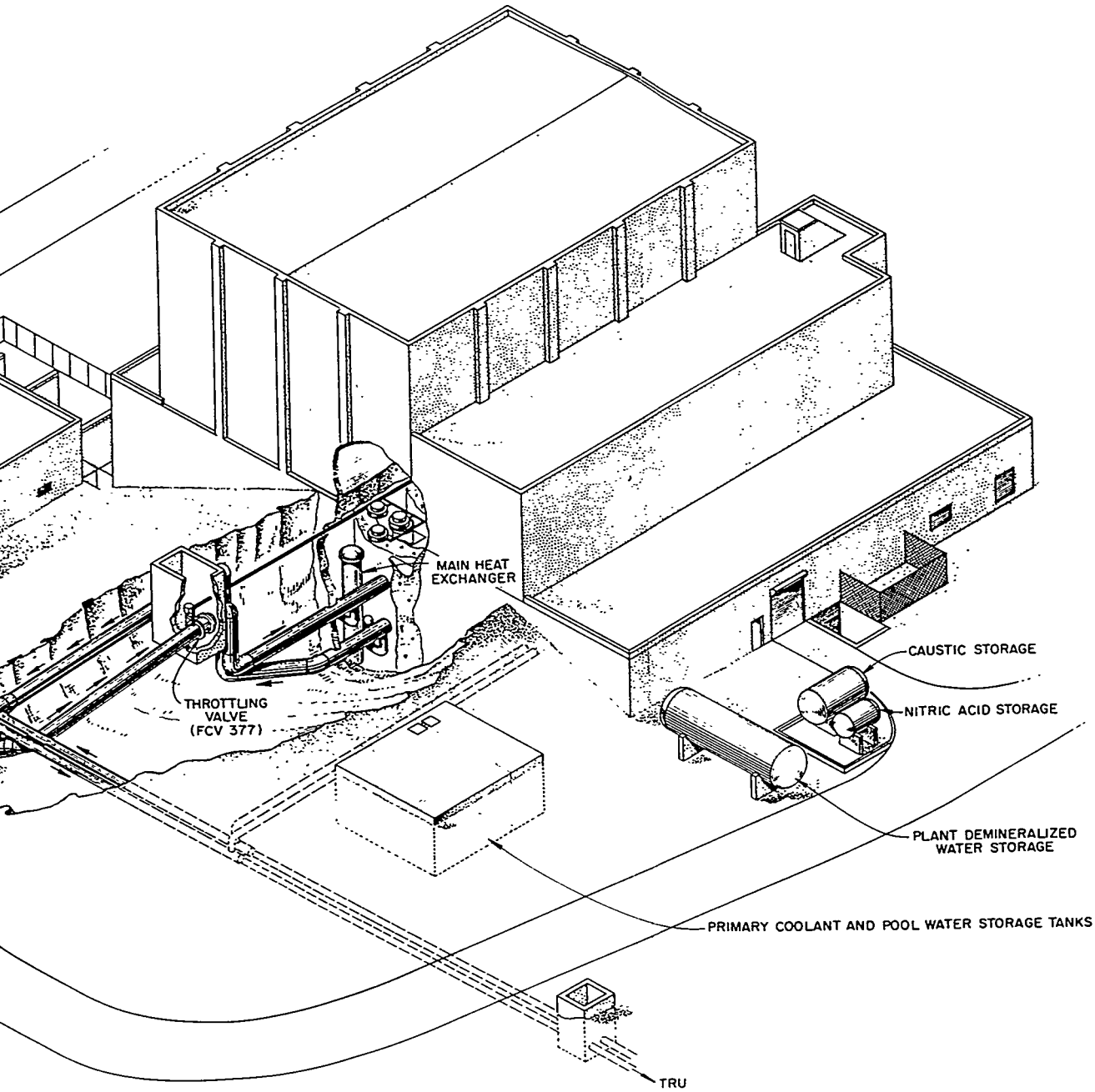

uipment Arrangement.

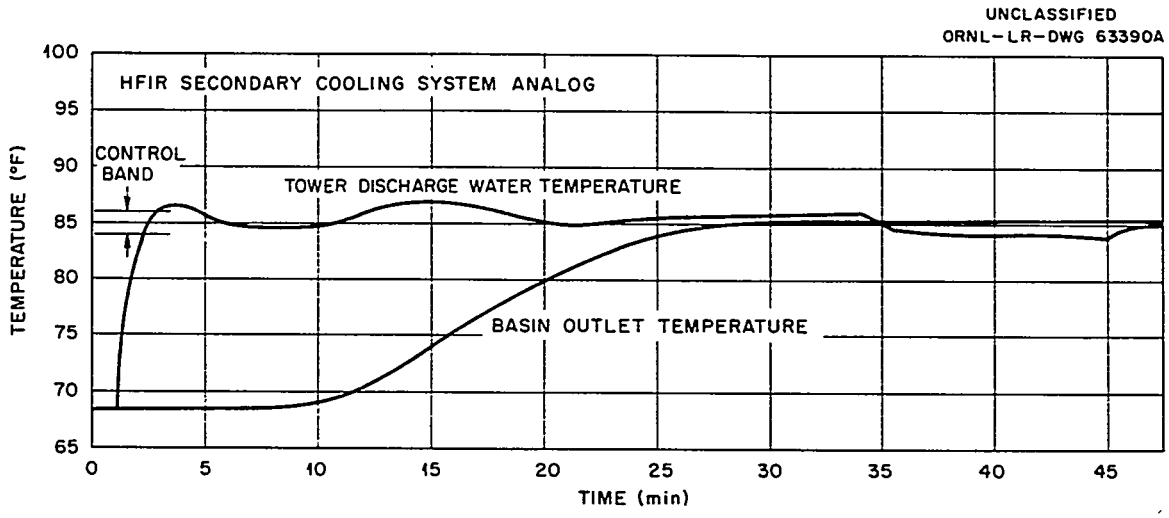

Fig. 6.3.4. Typical Secondary Coolant Temperature Response Following Startup.

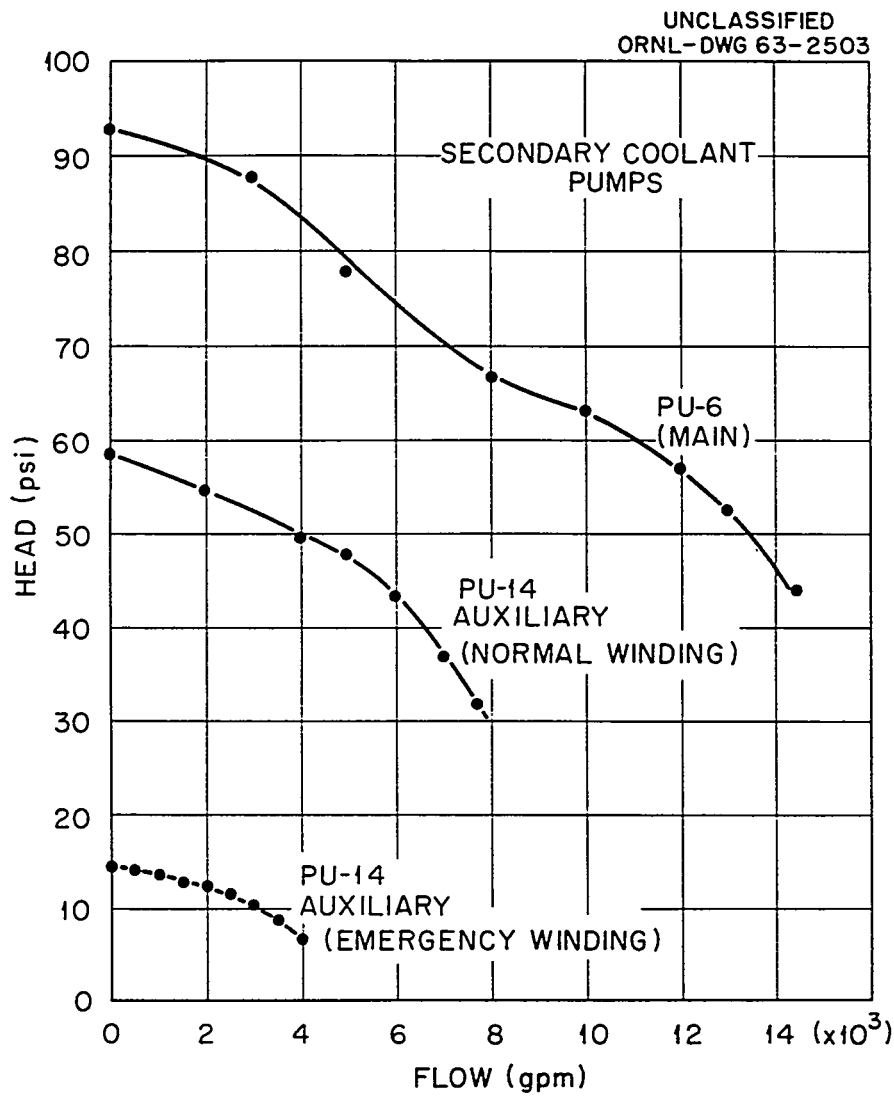

Fig. 6.3.5. Characteristic Curves for Secondary Coolant Pumps.

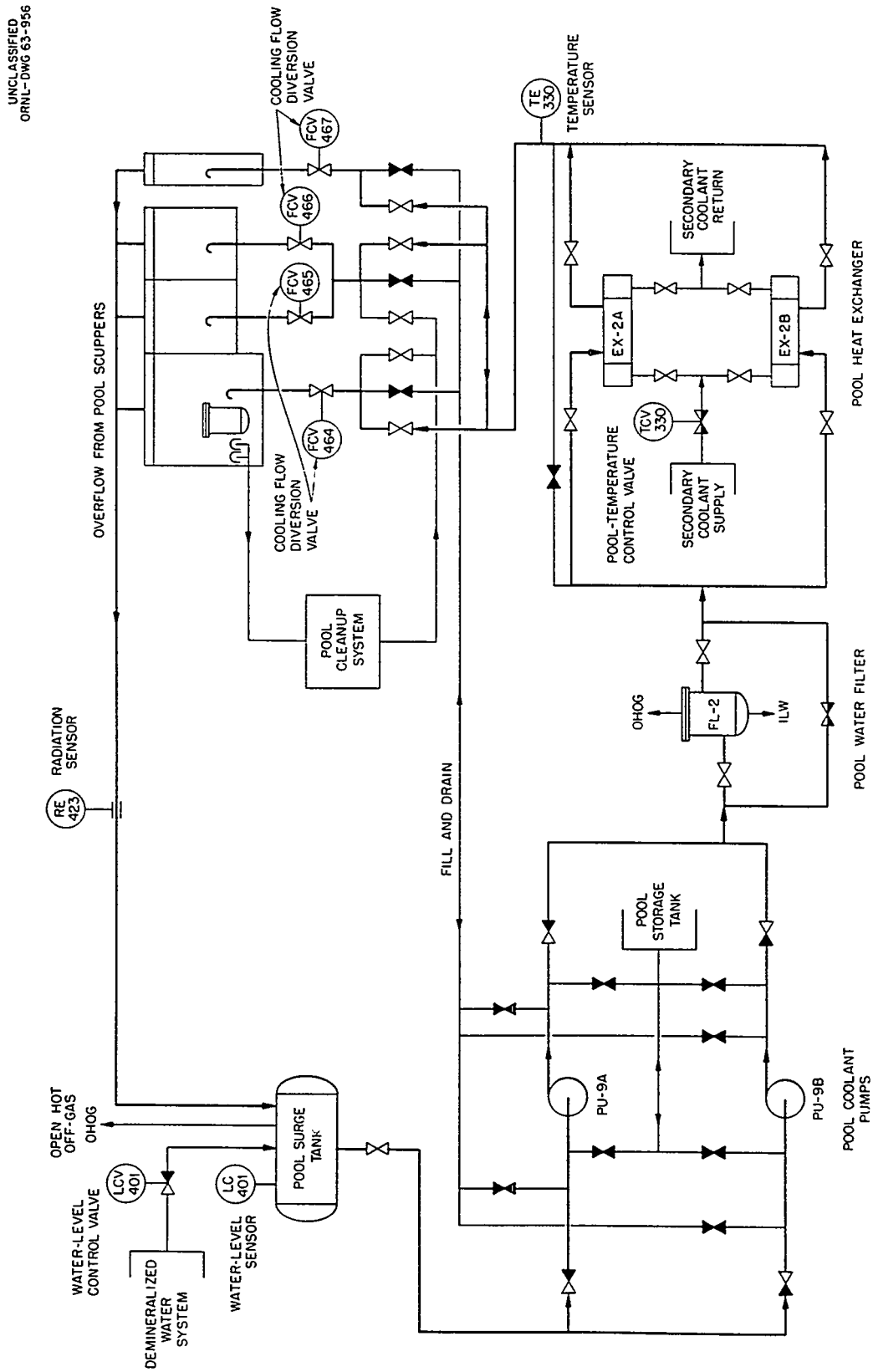

Fig. 6.4.1. Pool Coolant System.

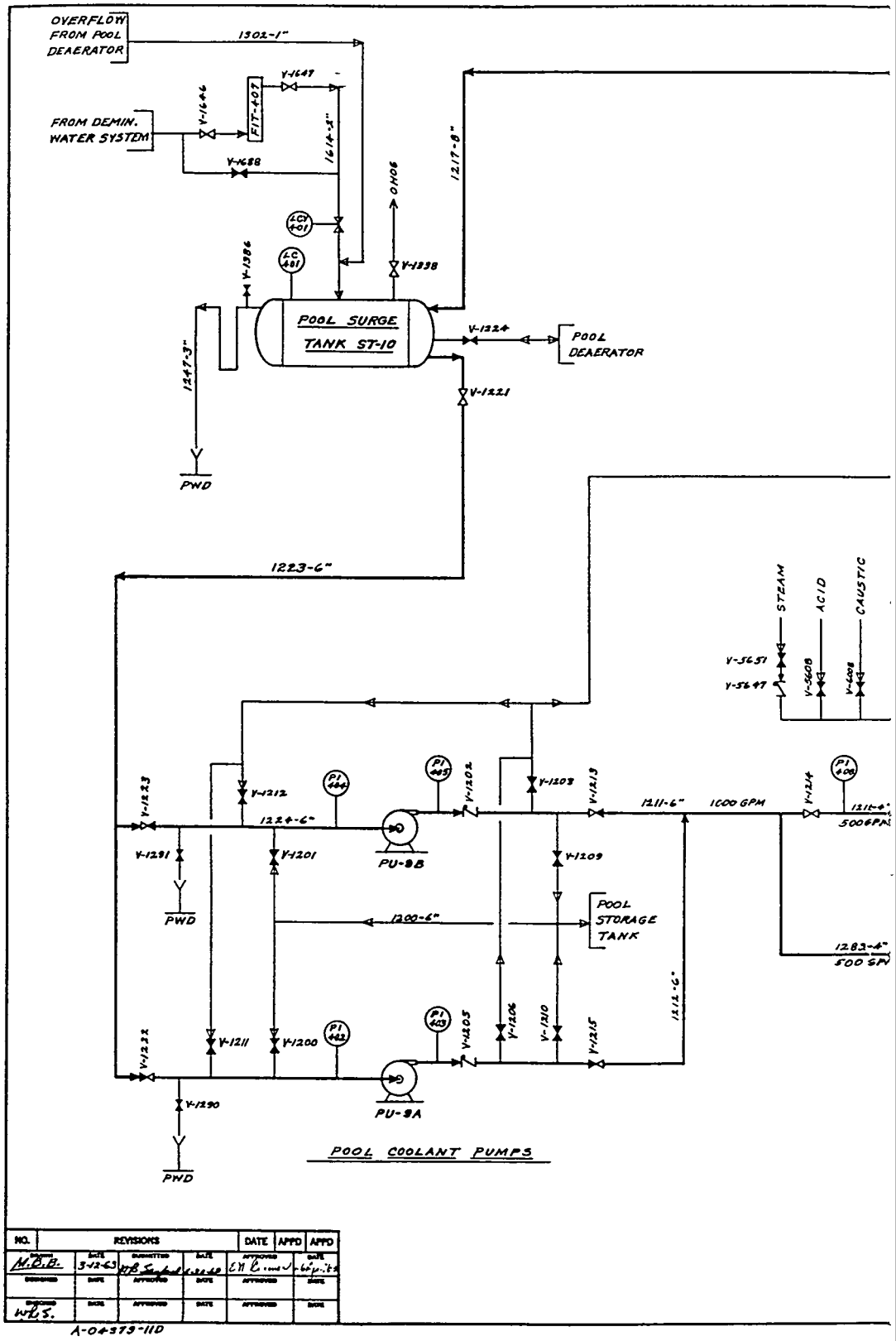

NO.	REVISIONS				DATE	APPD	APPD
DRAWN M.B.B.	DATE 3-12-63	SUBMITTED	DATE	APPROVED	DATE		
DESIGNED	DATE	APPROVED	DATE	APPROVED	DATE		
CHECKED W.B.S.	DATE	APPROVED	DATE	APPROVED	DATE		

A-04379-11D

Fig. 6.4.2

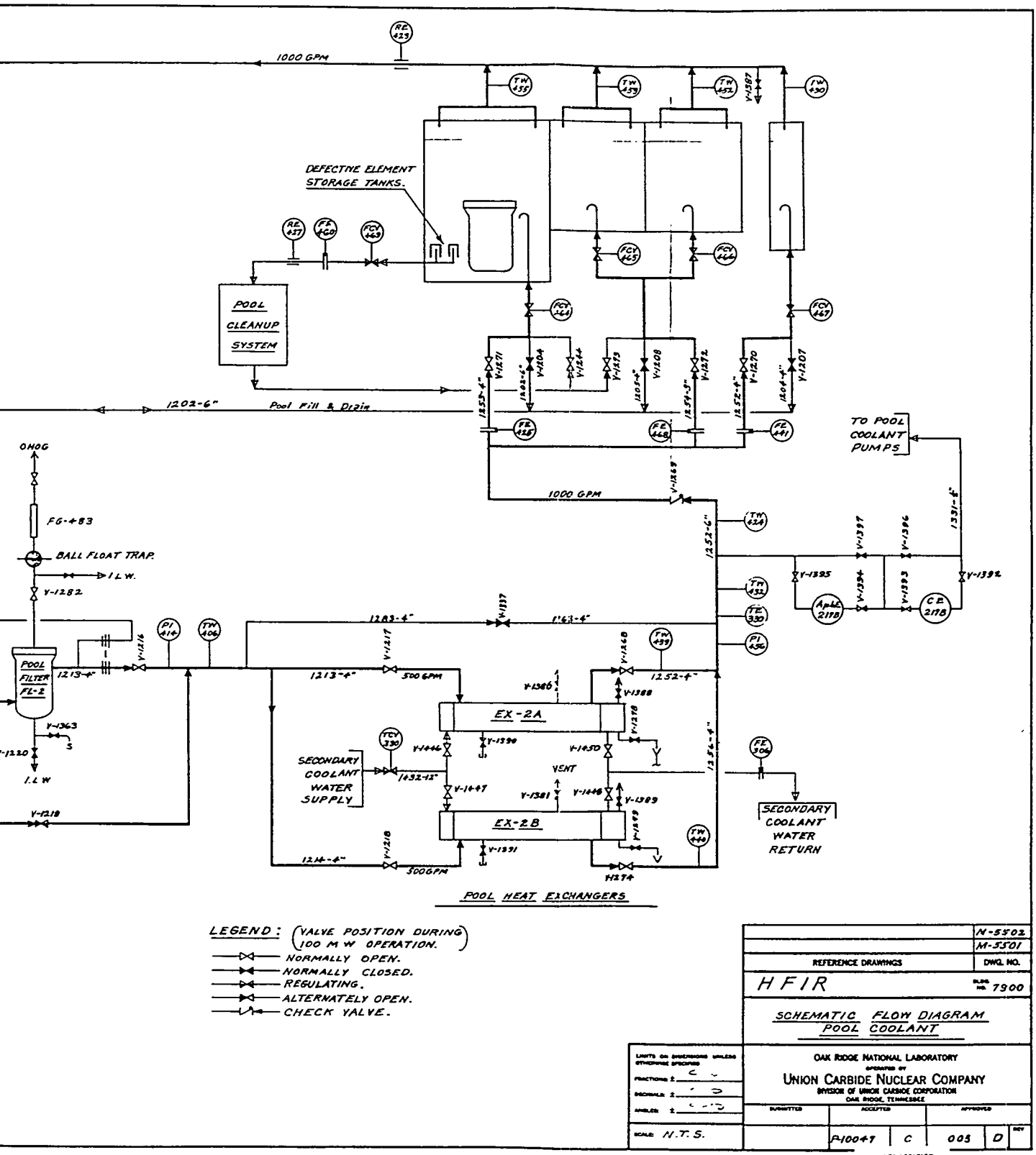

Pool Coolant – Schematic Flow Diagram.

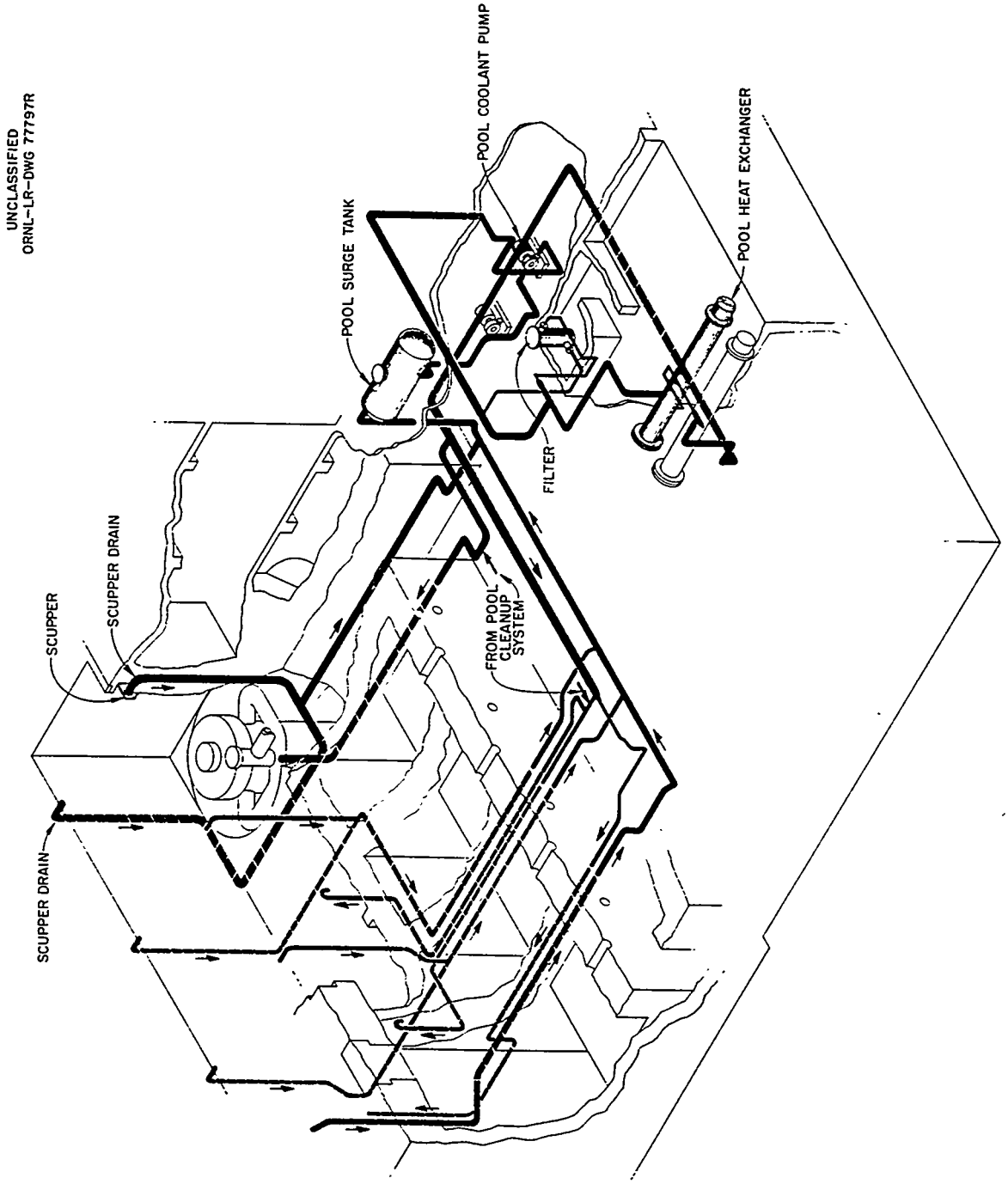

Fig. 6.4.3. Pool Coolant Equipment Arrangement.

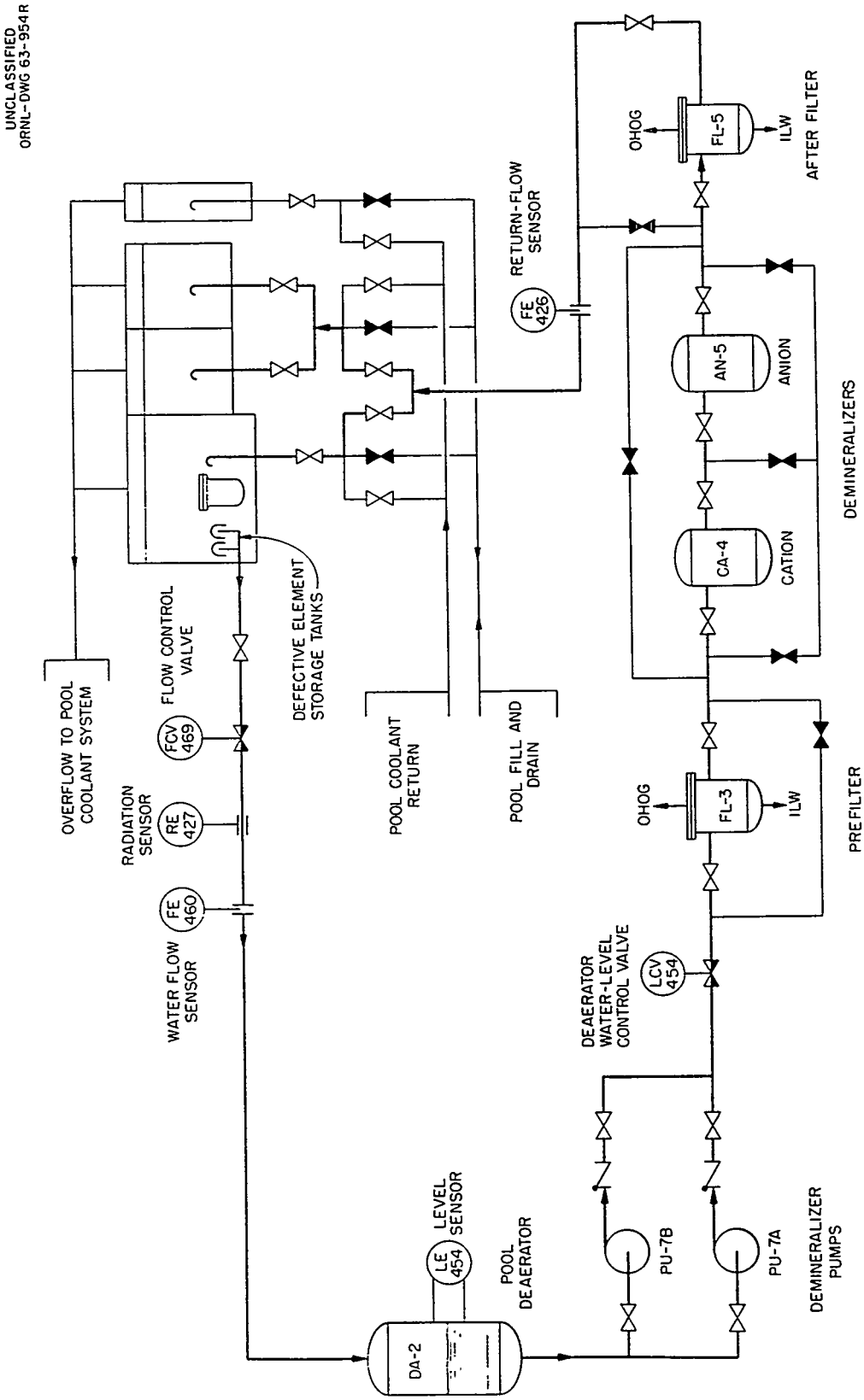

Fig. 6.4.4. Pool Cleanup System.

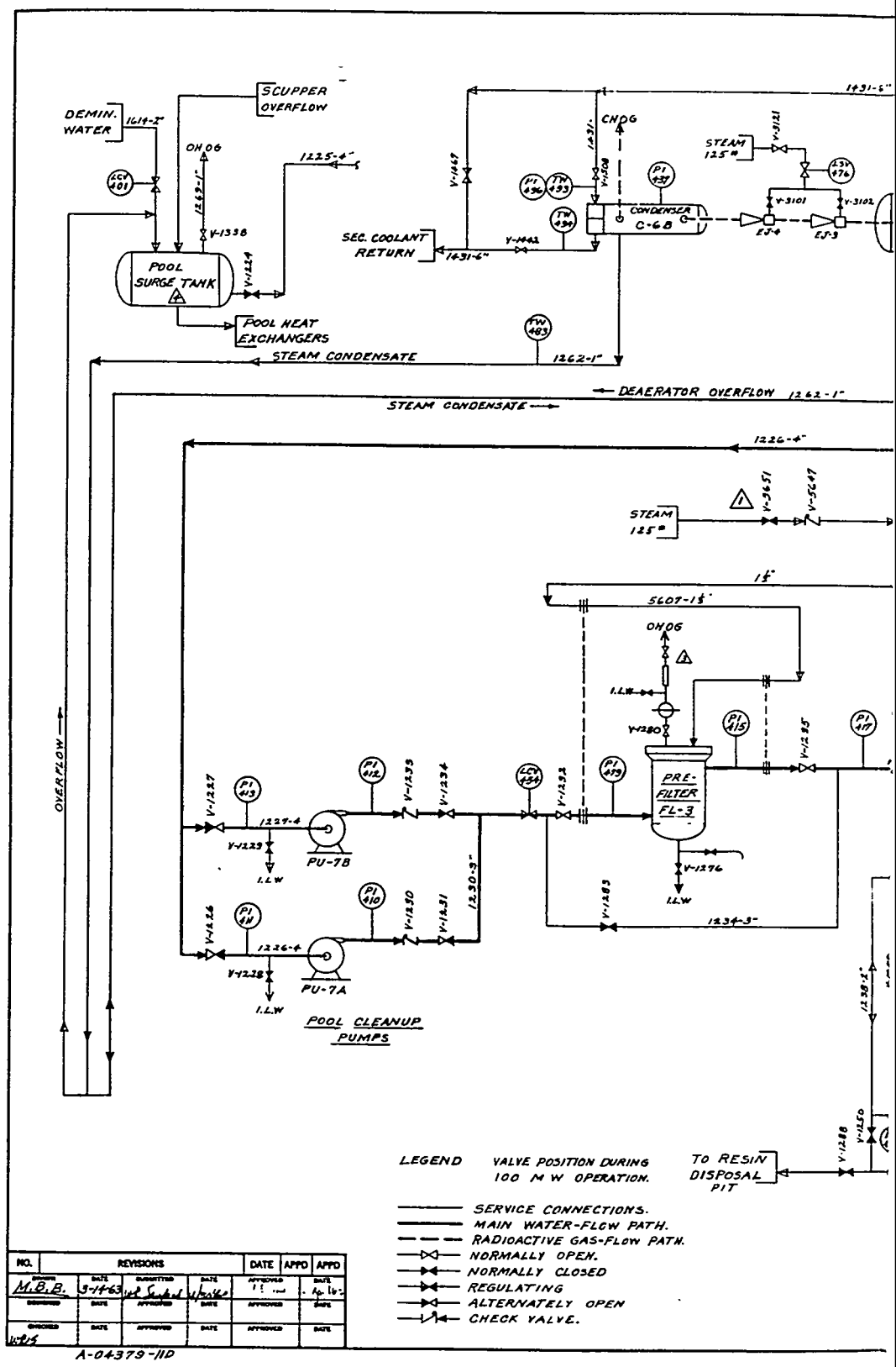
SCUPPER OVERFLOW
DEMIN. WATER
1614-2"
OH OG
1225-4"
1262-1"
V-1338
POOL SURGE TANK
V-1224
POOL HEAT EXCHANGERS
STEAM CONDENSATE
1262-1"
SEC. COOLANT RETURN
1431-6"
V-1442
V-1467
1431-
CHOG
V-1208
CONDENSER C-6B
STEAM 125#
V-3121
V-3101
V-3102
EJ-4
EJ-3
DEAERATOR OVERFLOW 1262-1"
STEAM CONDENSATE
1226-4"
V-3651
V-3649
STEAM 125#
1f"
5607-1f"
OH OG
I.L.W
V-1280
PRE-FILTER FL-3
V-1276
I.L.W
V-1285
1234-3"
V-1285
V-1227
1227-4
V-1229
I.L.W
PU-7B
V-1239
V-1234
1230-3"
V-1226
1226-4
V-1228
I.L.W
PU-7A
POOL CLEANUP PUMPS
OVERFLOW
1238-2"
V-1250
V-1238
TO RESIN DISPOSAL PIT
LEGEND
VALVE POSITION DURING 100 M W OPERATION.
SERVICE CONNECTIONS.
MAIN WATER-FLOW PATH.
RADIOACTIVE GAS-FLOW PATH.
NORMALLY OPEN.
NORMALLY CLOSED
REGULATING
ALTERNATELY OPEN
CHECK VALVE.
NO. REVISIONS DATE APPD APPD
M.B.B. 3-14-63
A-04379-11D

Fig. 6.

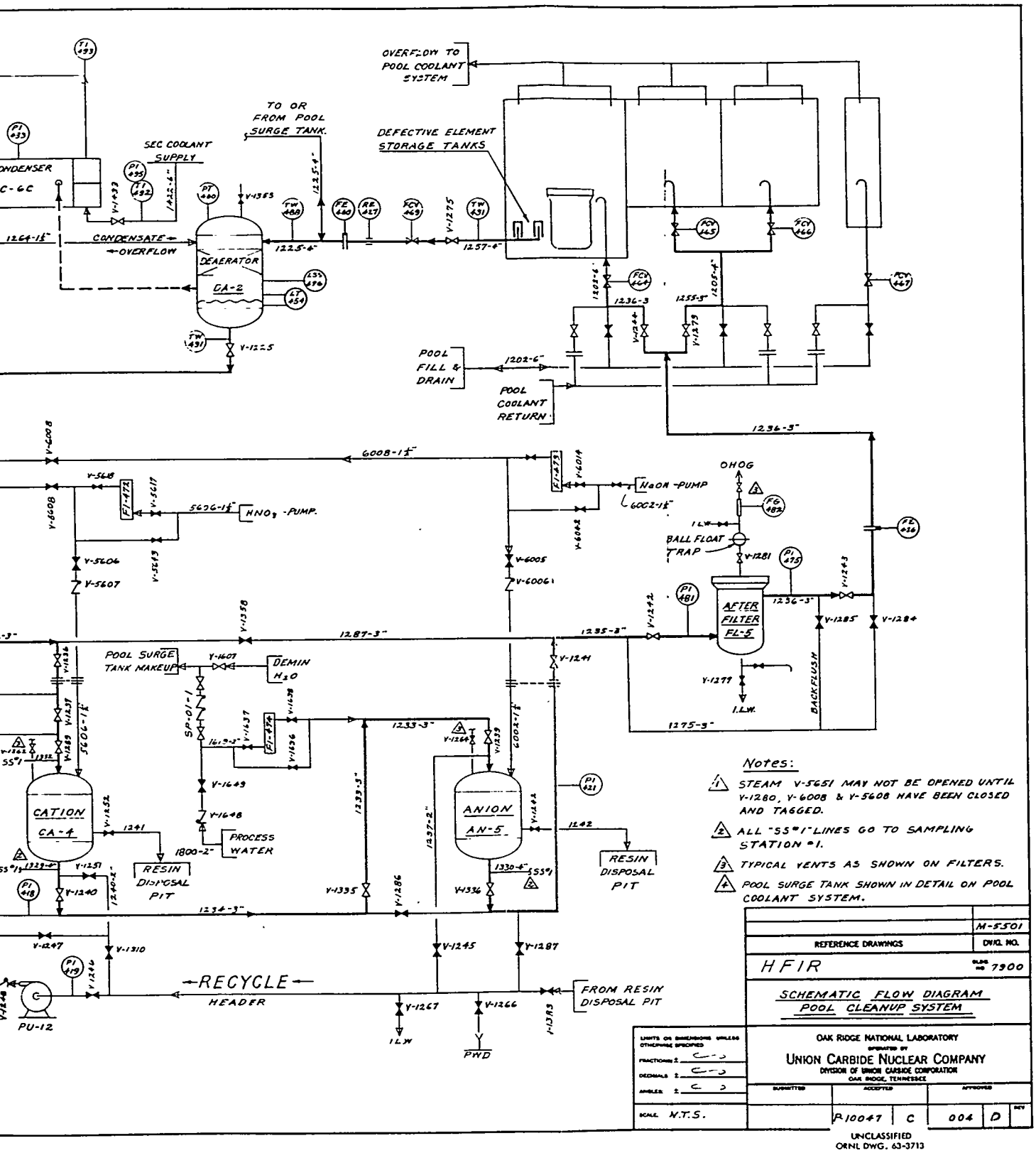

5. Pool Cleanup – Schematic Flow Diagram.

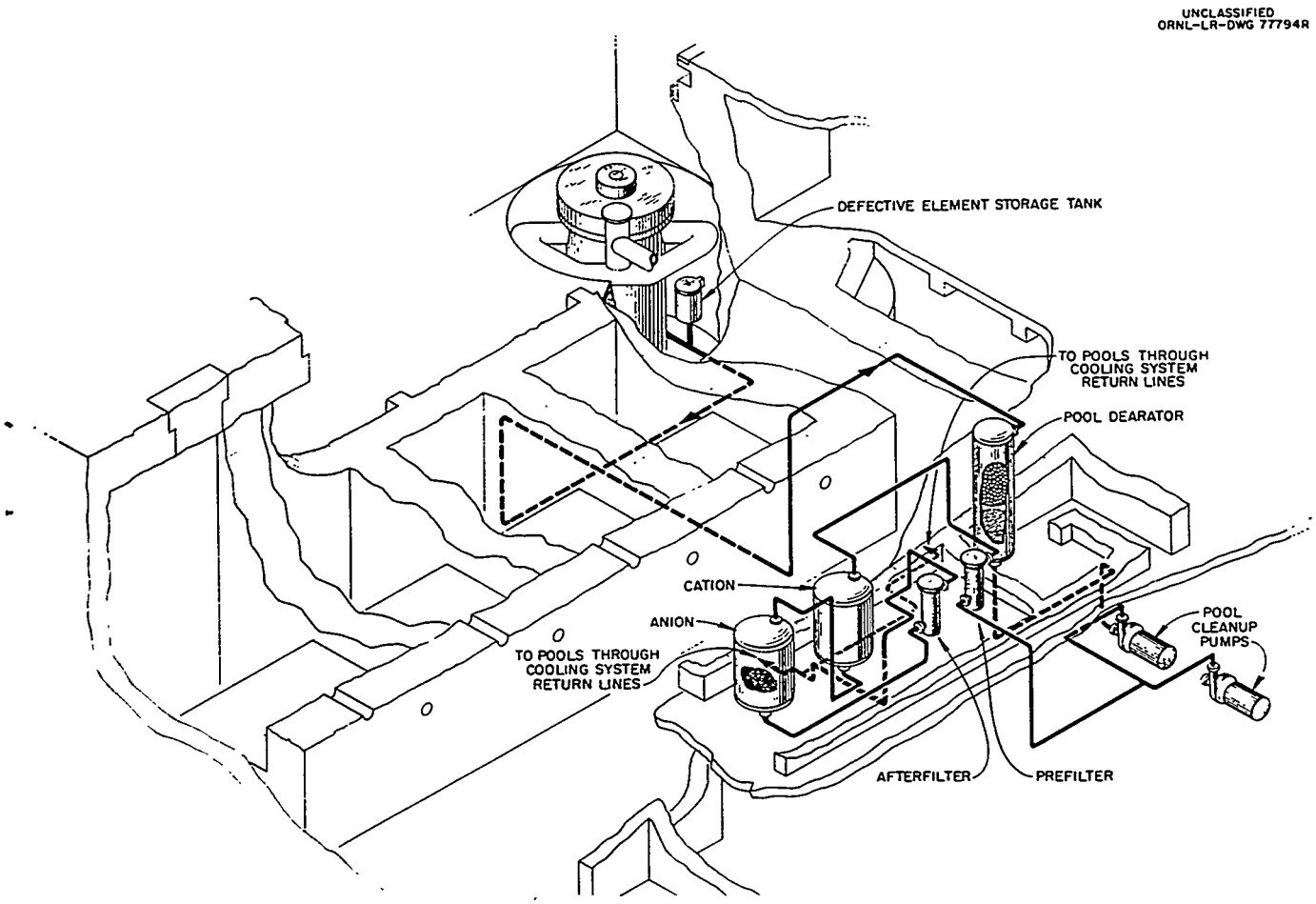

Fig. 6.4.6. Pool Cleanup Equipment Arrangement.

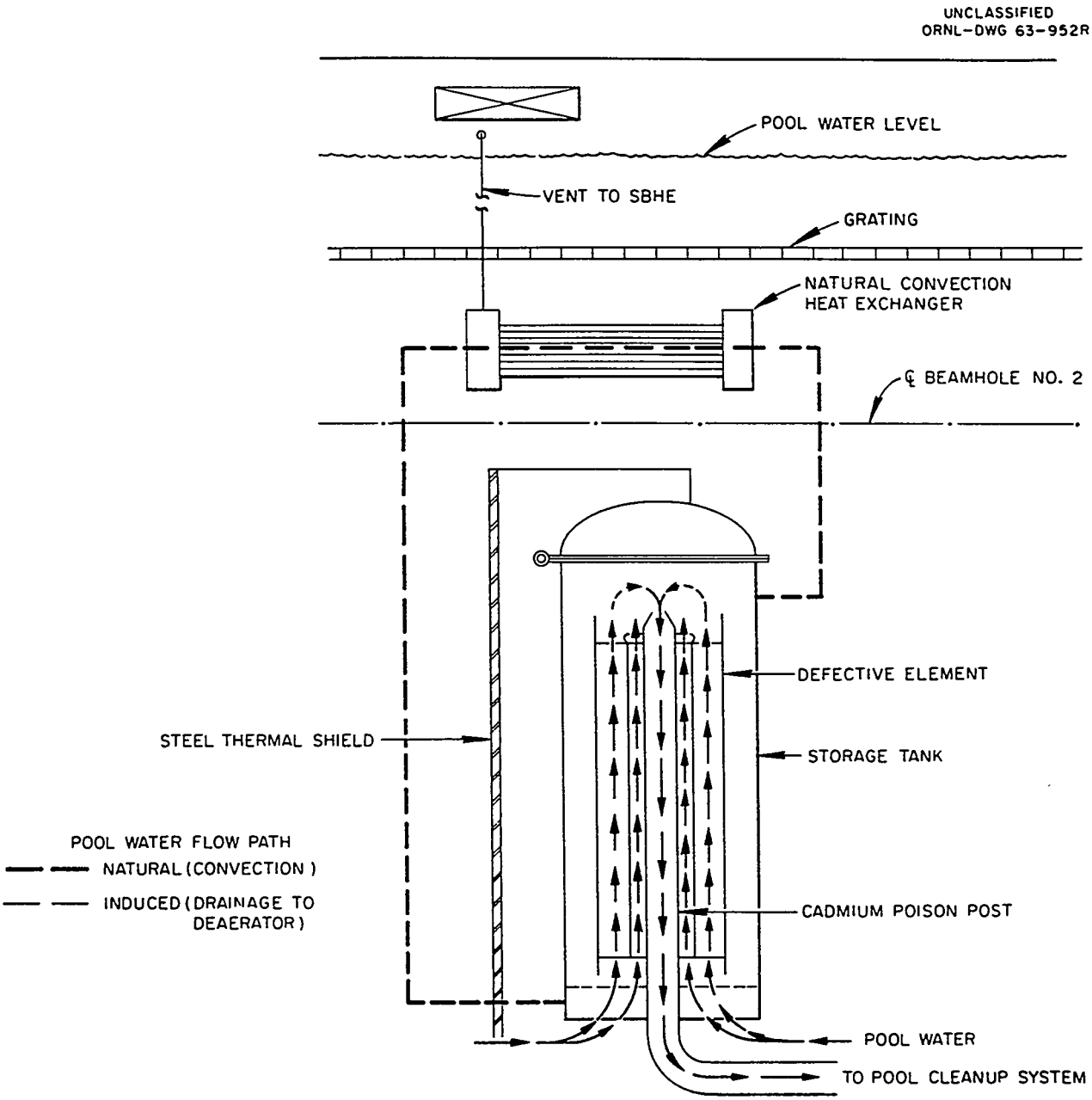

Fig. 6.4.7. Defective Element Storage Tank.

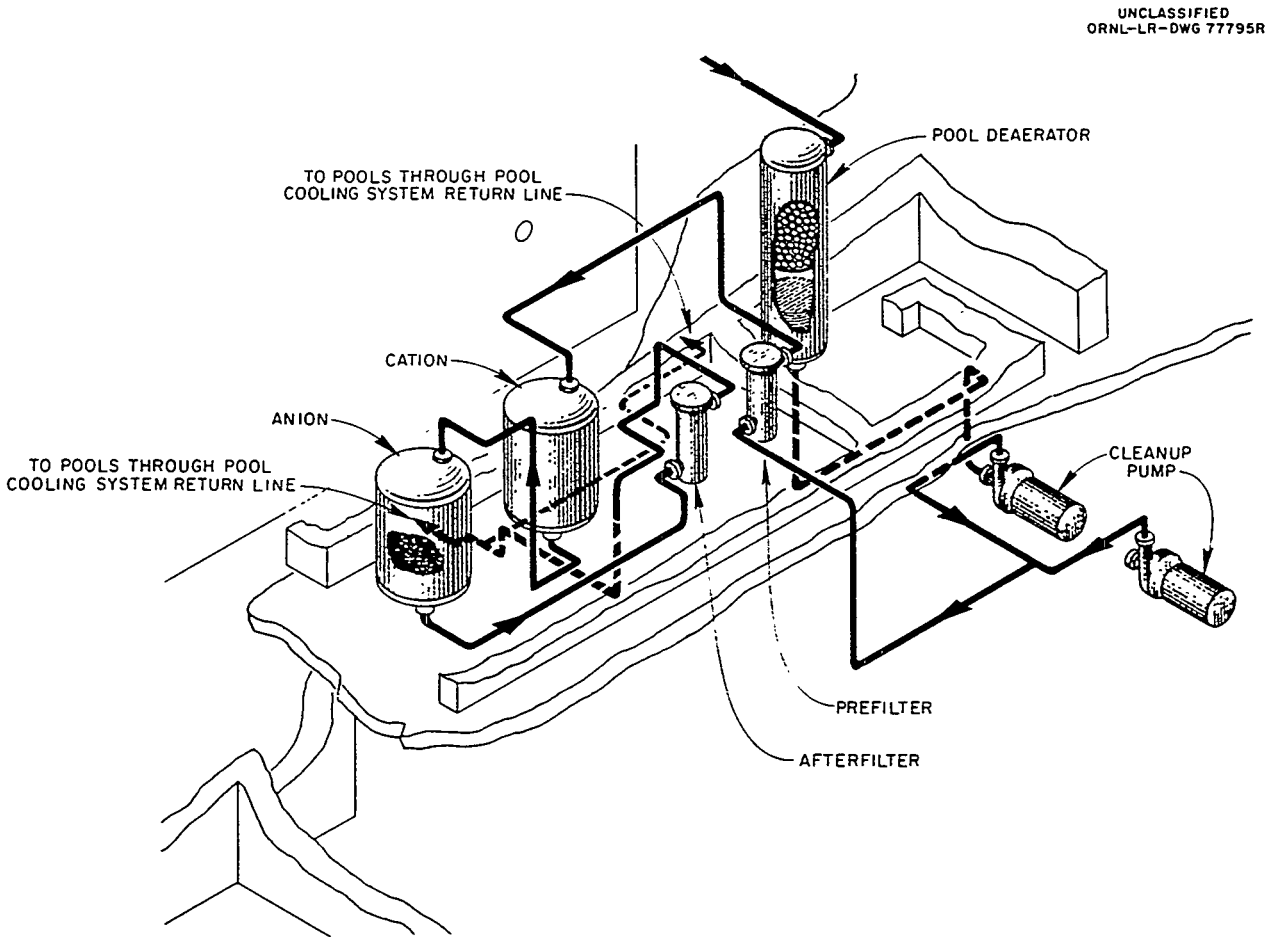

Fig. 6.4.8. Pool Cleanup System Details.

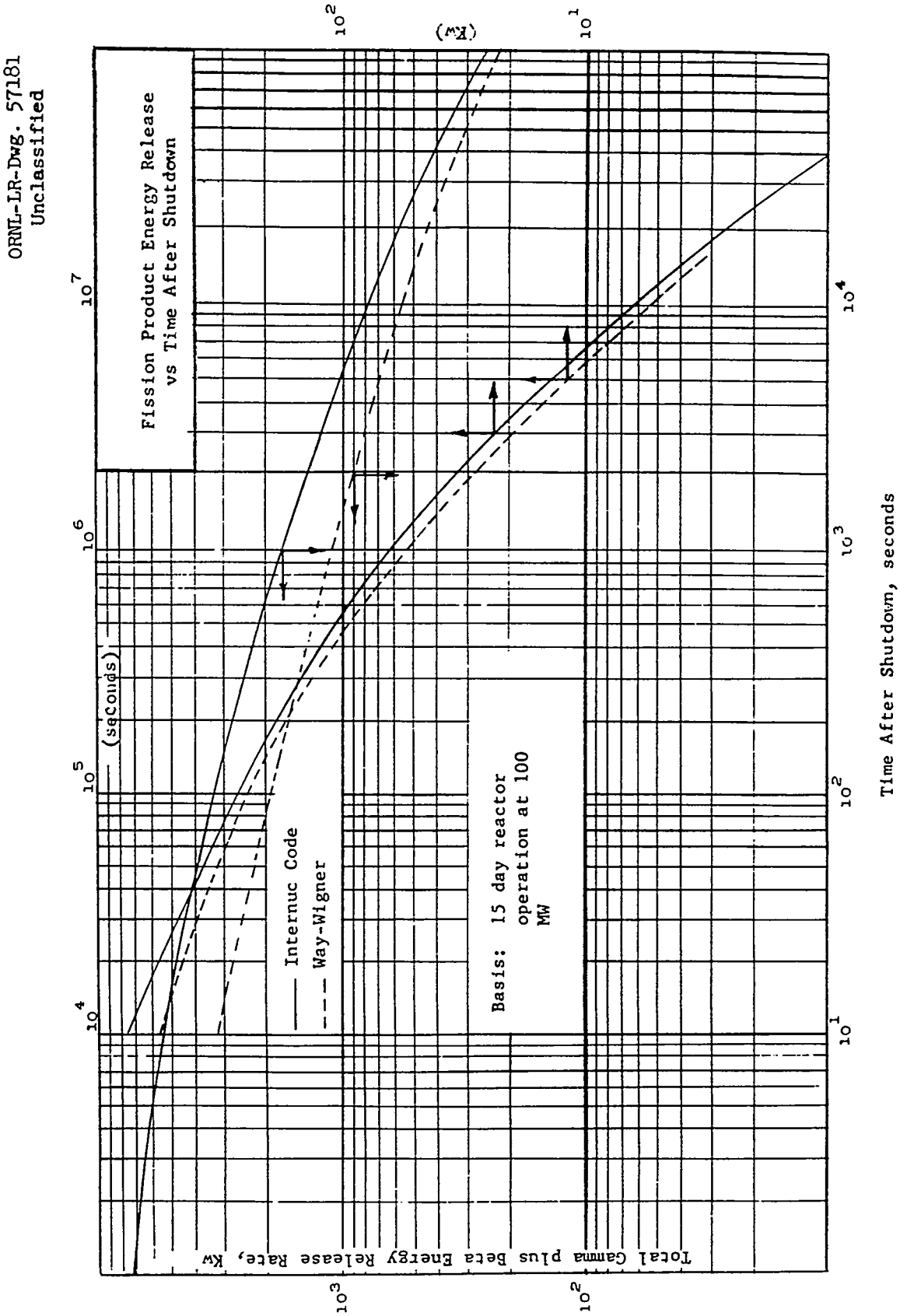

Fig. 6.5.1. Fission Product Energy Release vs Time After Shutdown.

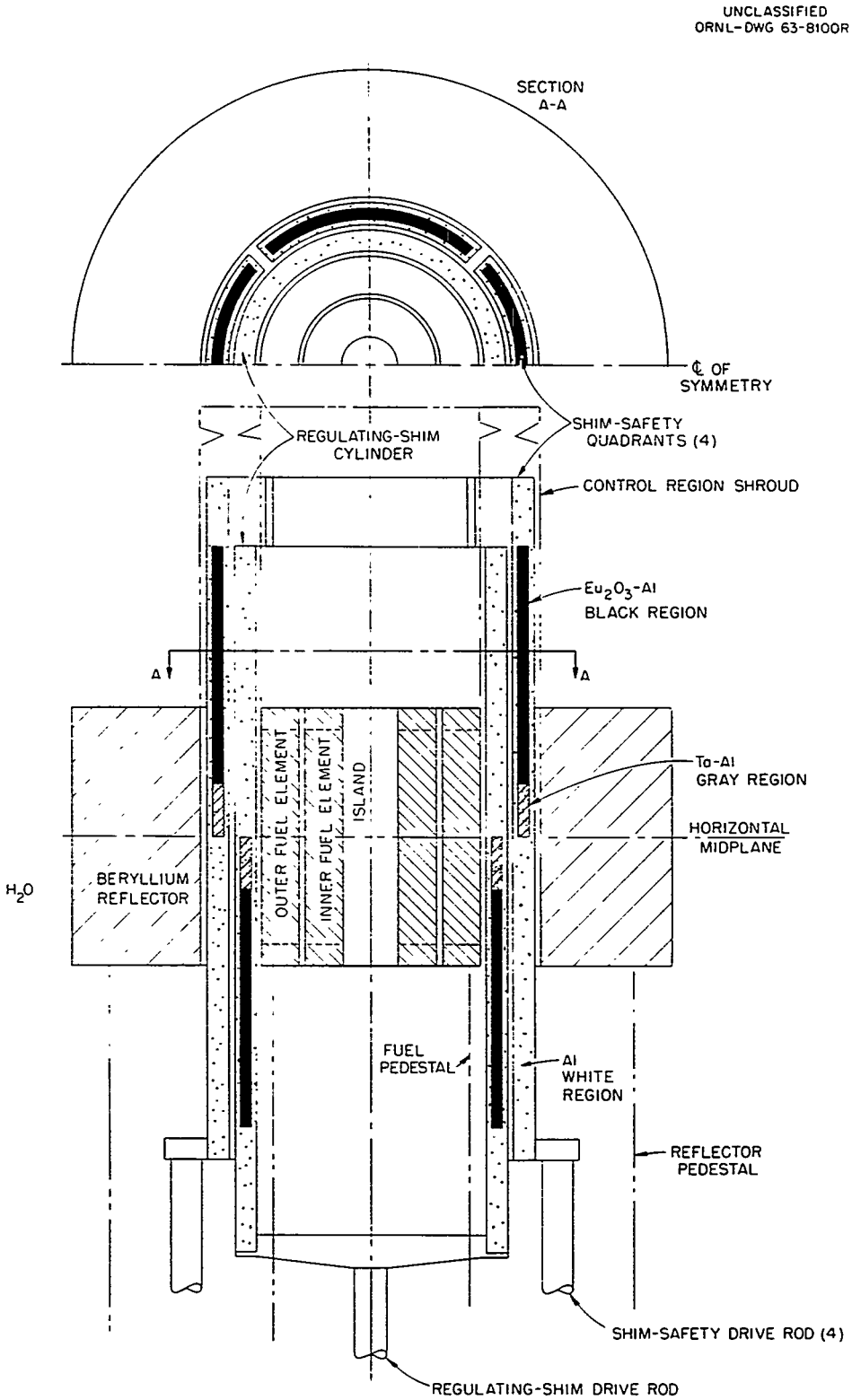

Fig. 7.2.1. Schematic Representation of the Reactor Core.

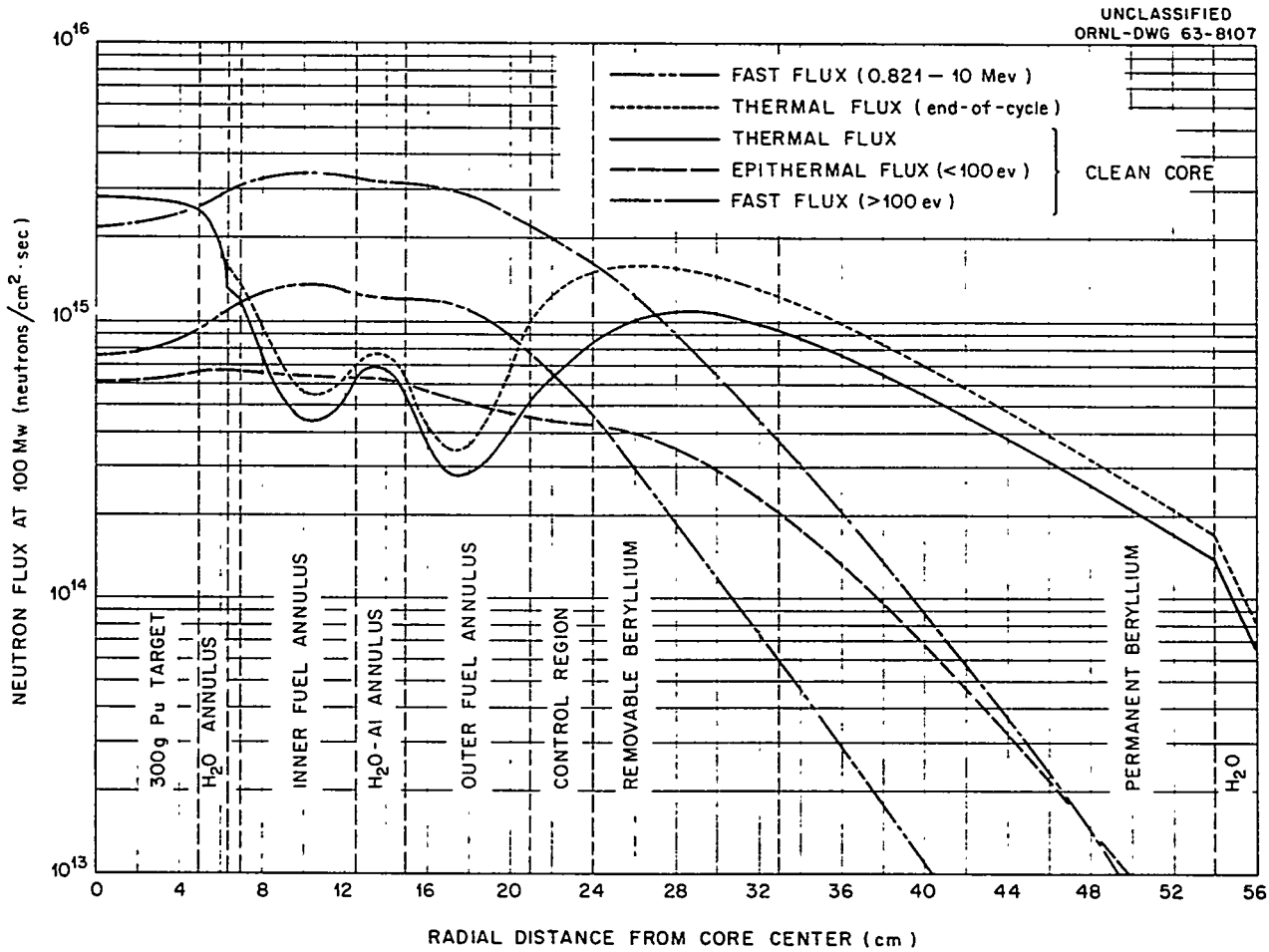

Fig. 7.2.2. Typical Radial Thermal-Neutron-Flux Distribution.

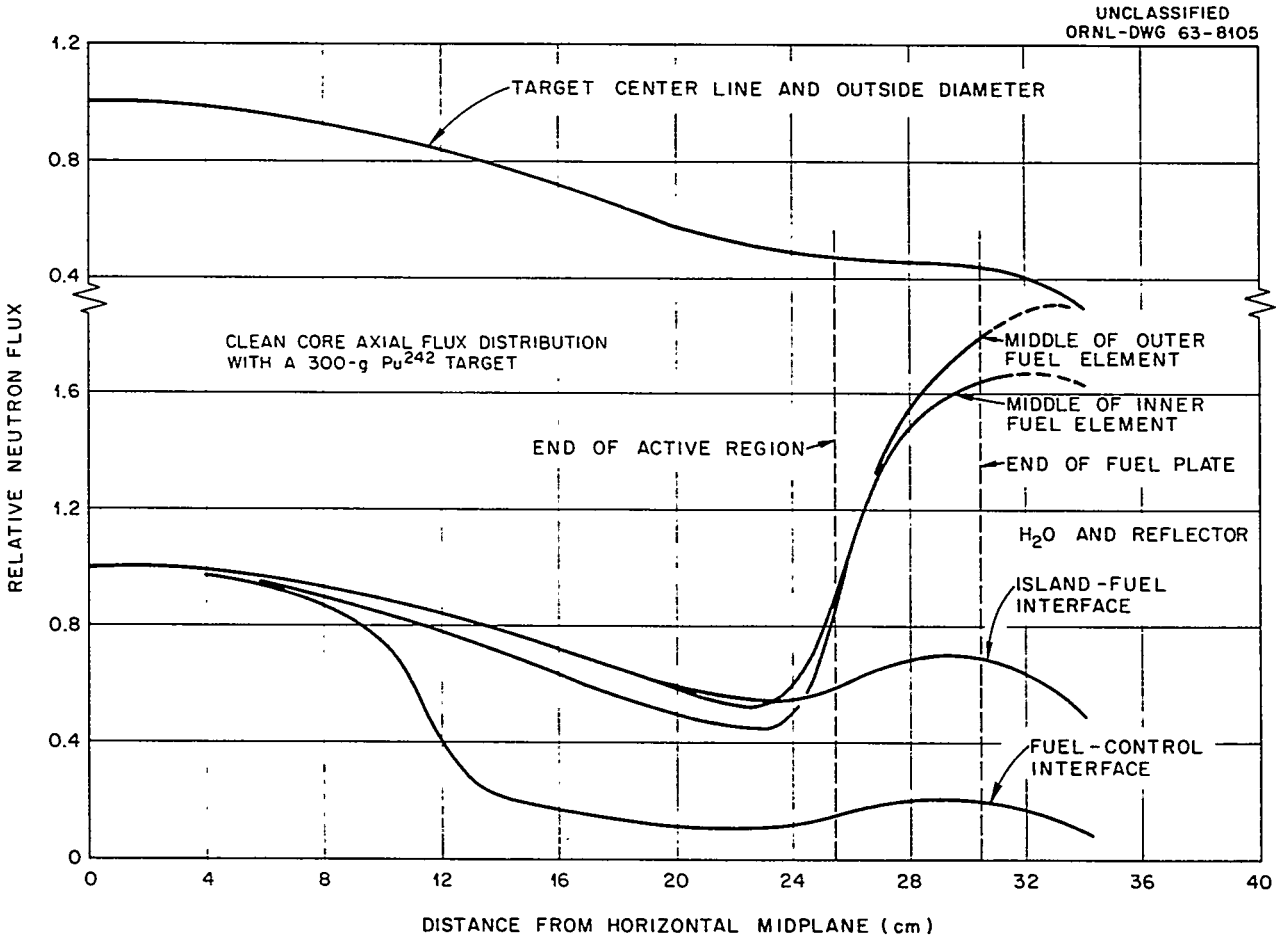

Fig. 7.2.3. Typical Axial Thermal-Neutron-Flux Distribution.

UNCLASSIFIED
ORNL-LR-DWG 50304

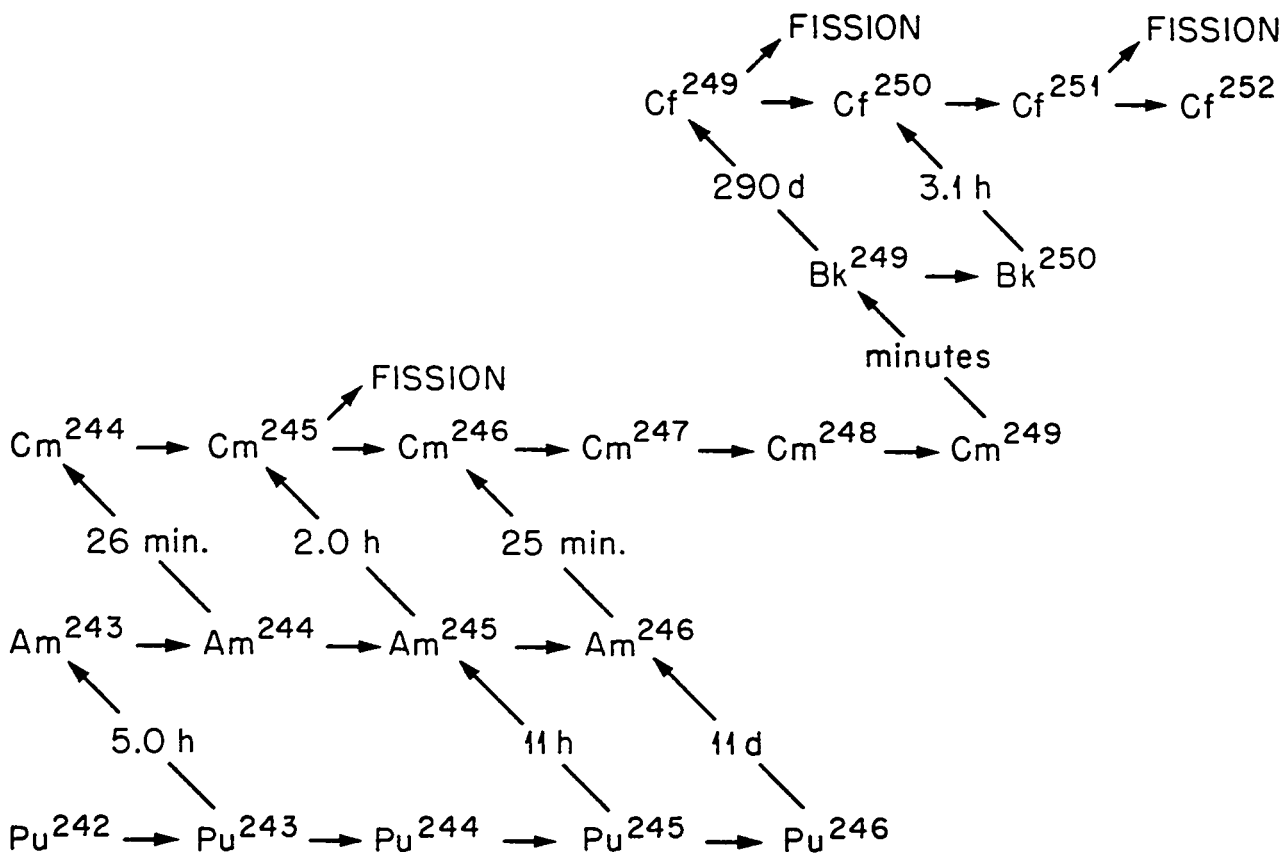

Fig. 7.3.1. Reaction Paths in the Production of Cf^{252} from Pu^{242}.

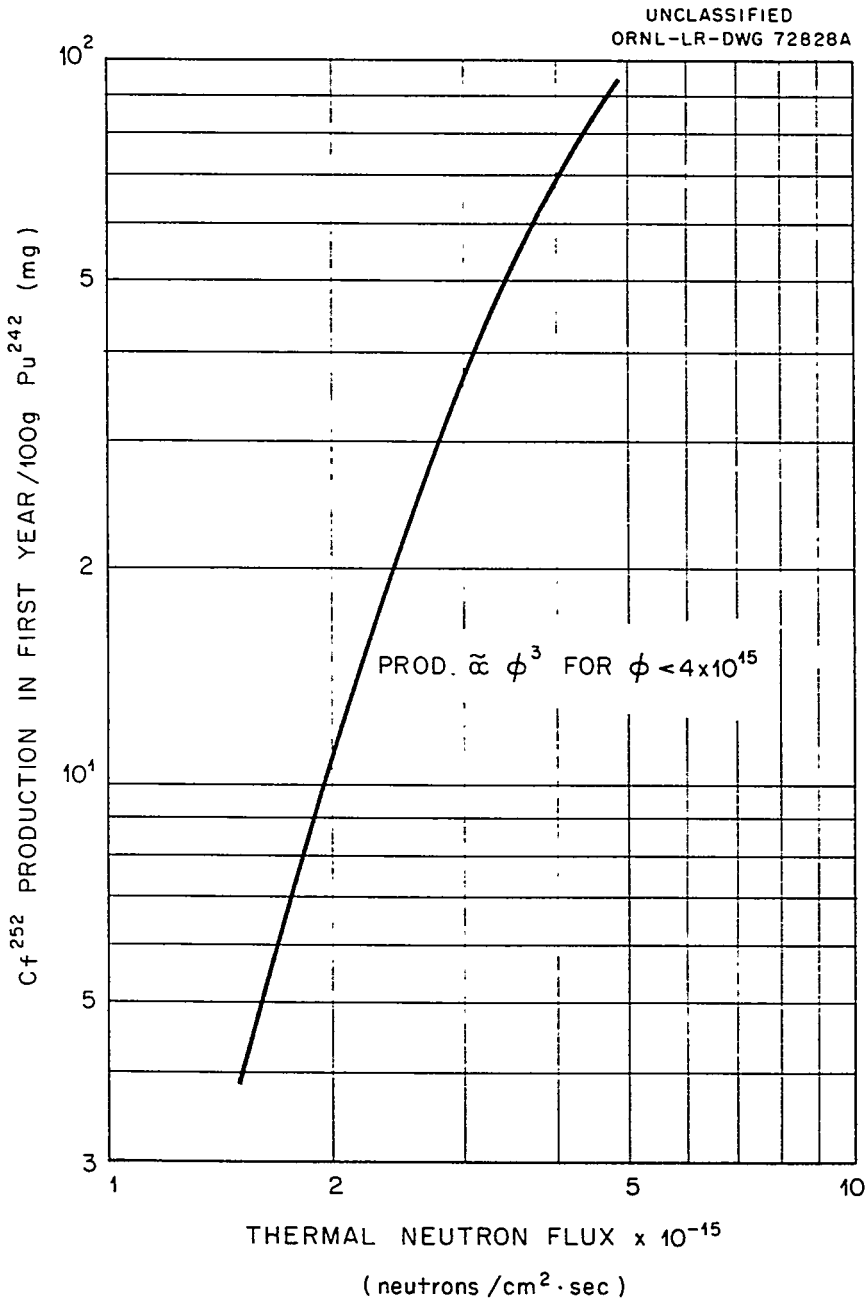

Fig. 7.3.2. Cf^{252} Production as a Function of Thermal-Neutron Flux.

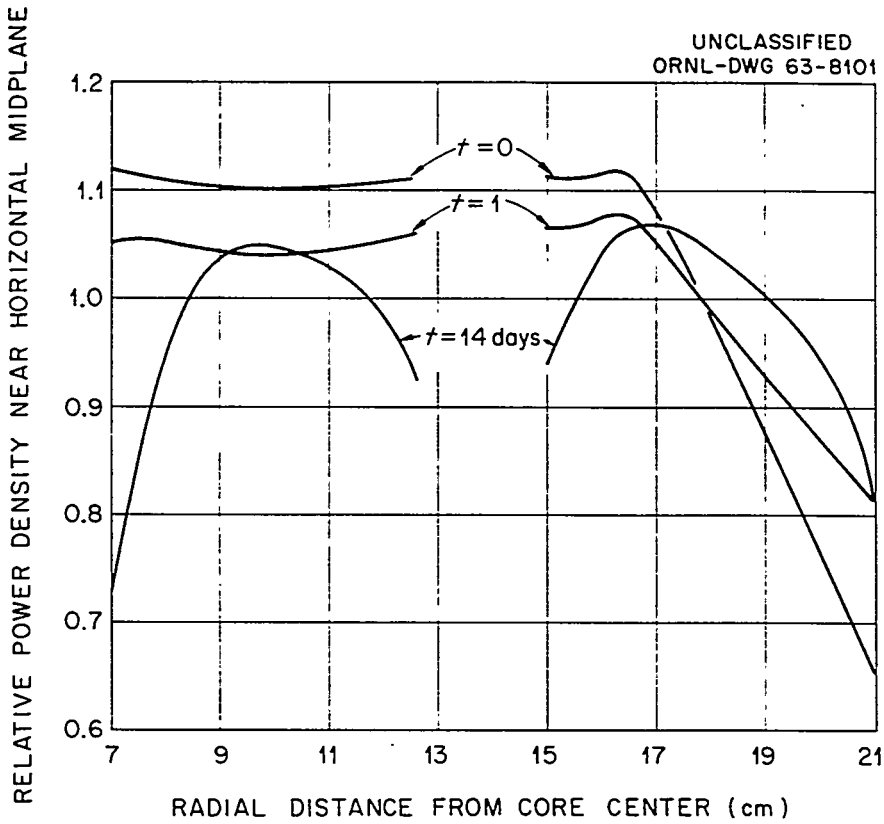

Fig. 7.3.3. Typical Radial Power Distributions During a Cycle.

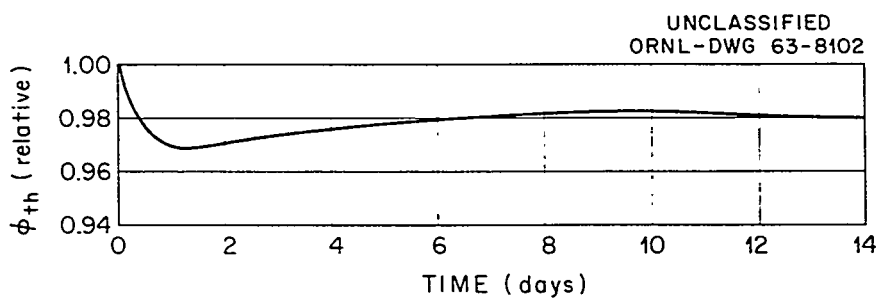

Fig. 7.3.4. Average Thermal-Neutron Flux in the Target During a Cycle.

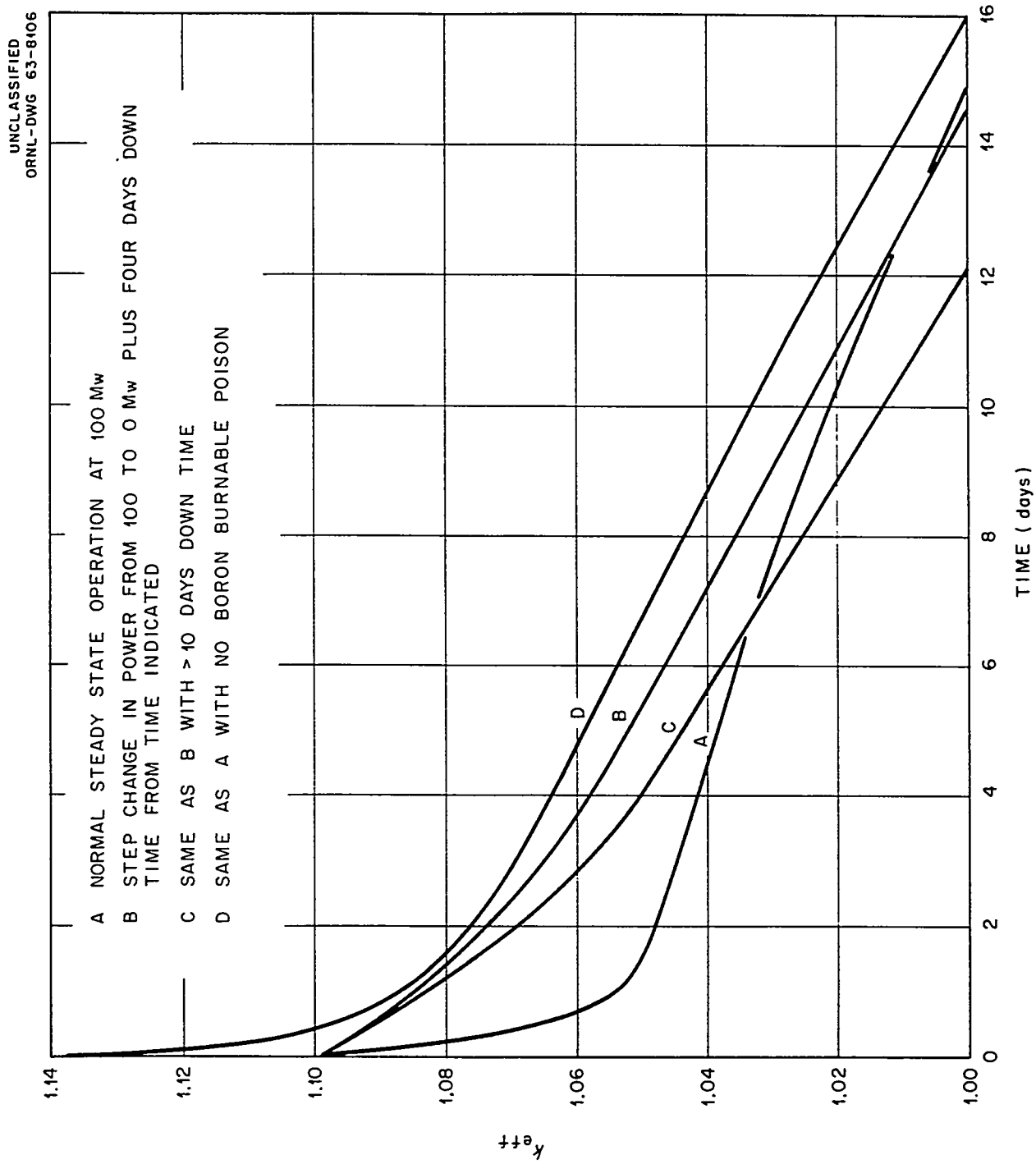

Fig. 7.3.5. Reactivity Variations During a Cycle.

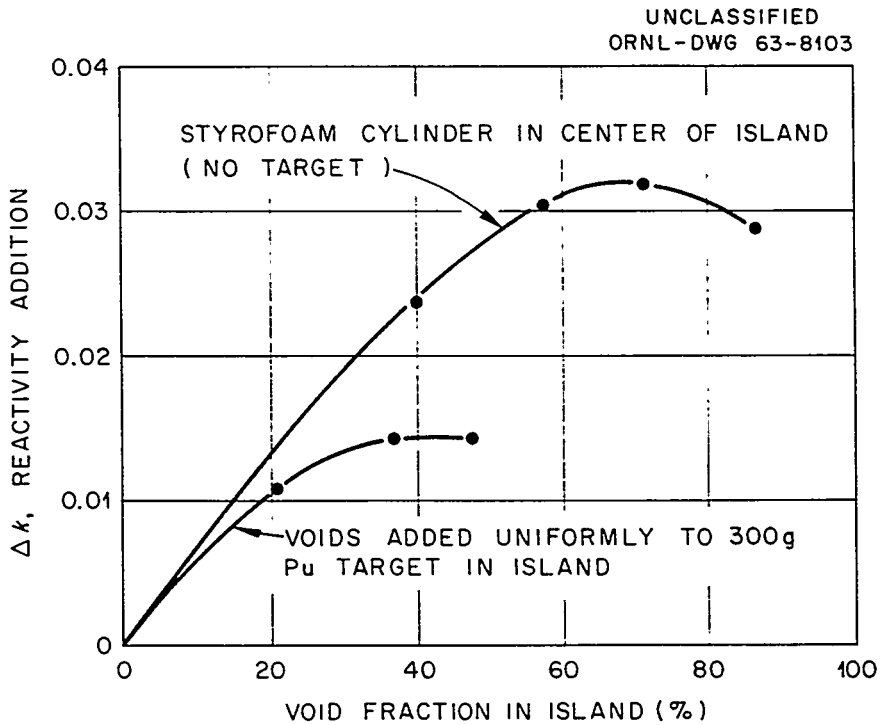

Fig. 7.3.6. Island Void Effects on Reactivity.

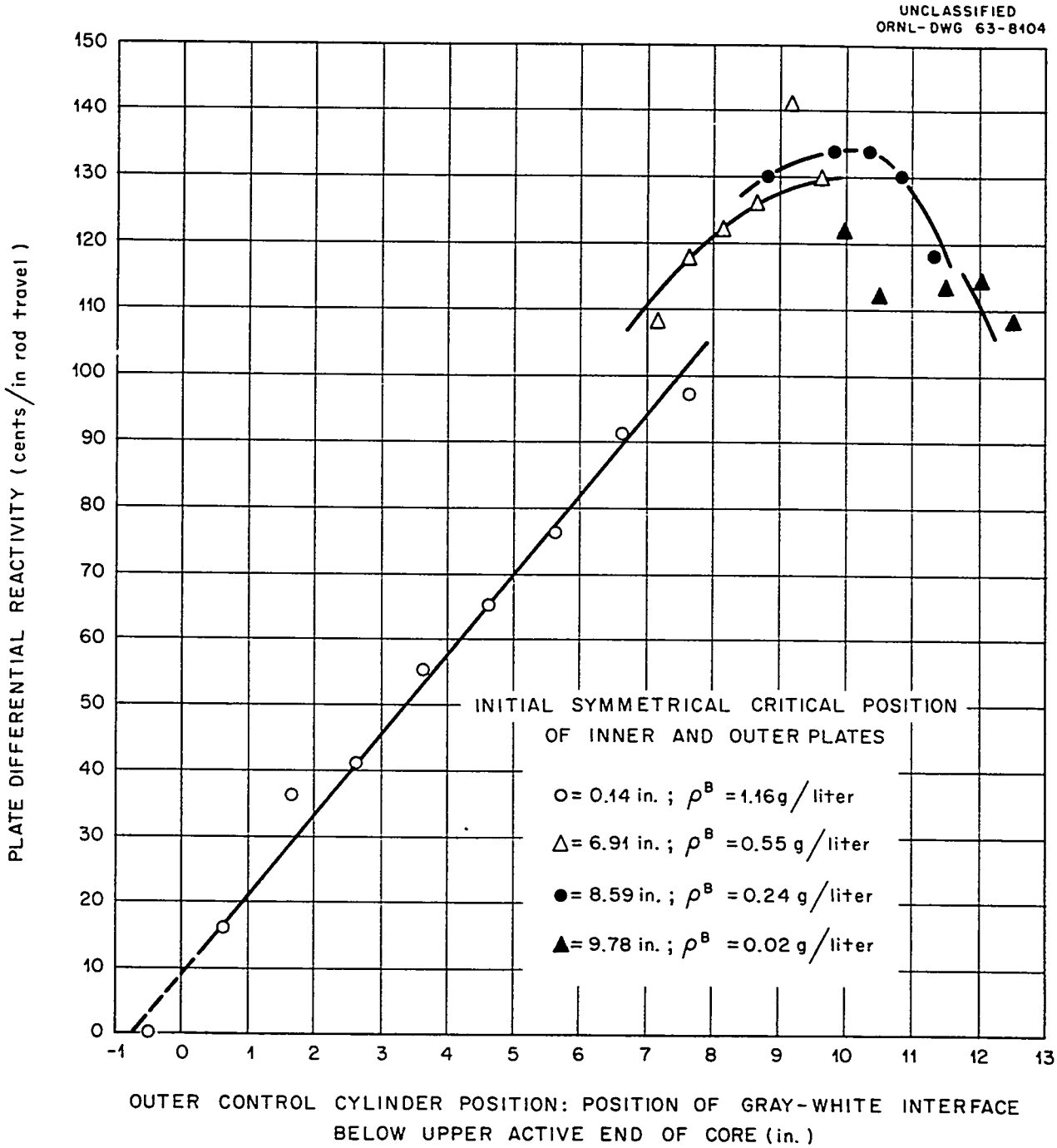

Fig. 7.3.7. Differential Reactivity of the Shim-Safety Group.

UNCLASSIFIED
ORNL-LR-DWG 73099

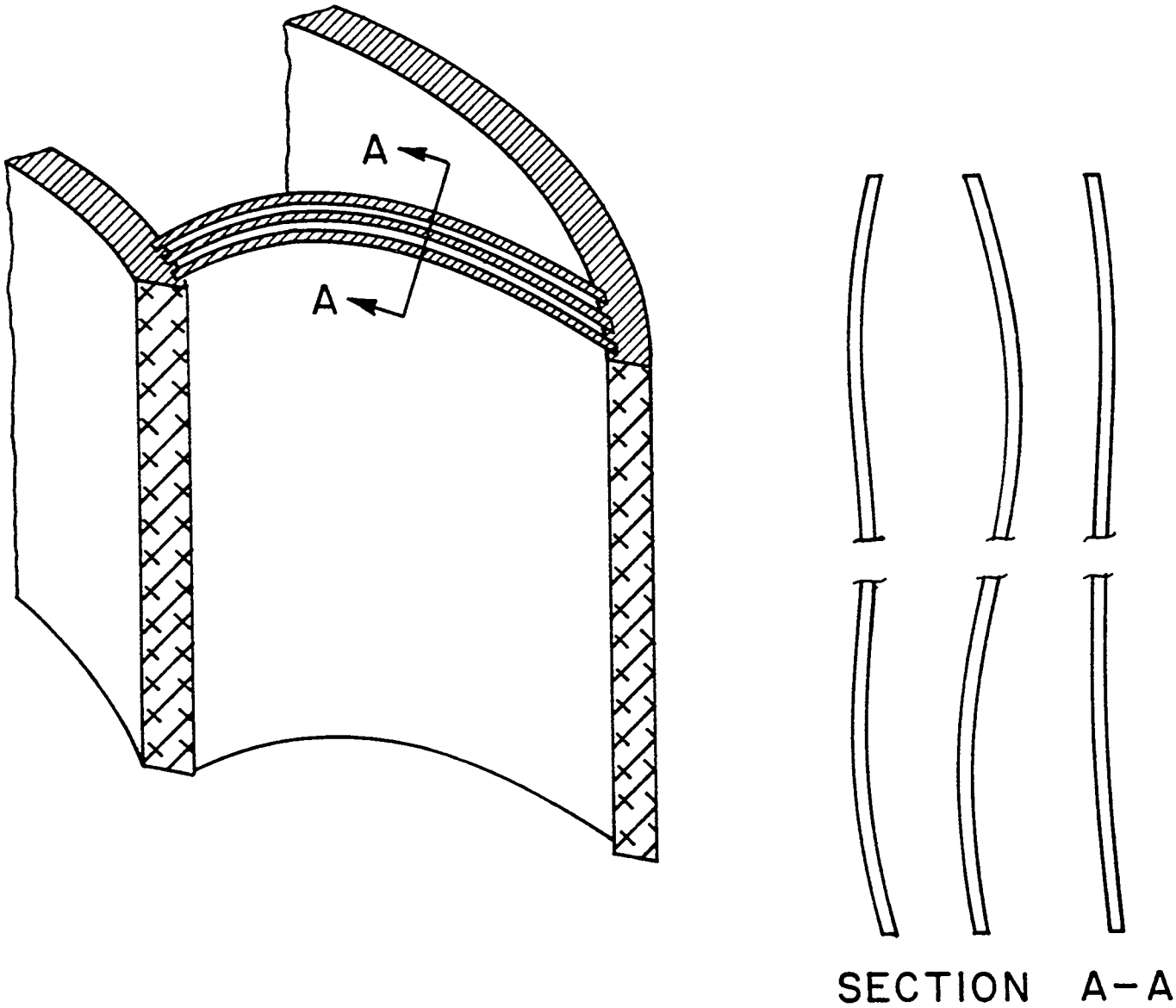

Fig. 7.4.1. Normal Deviations of Involute Fuel Plates and Coolant Channels.

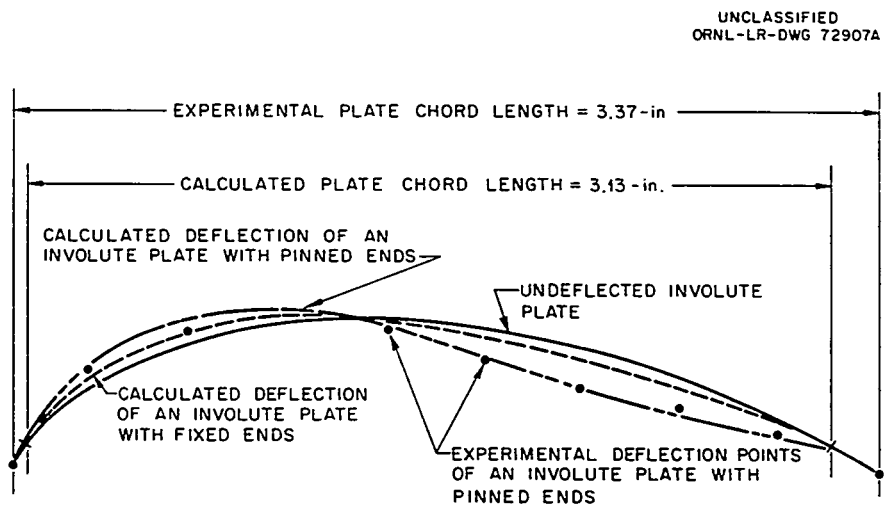

Fig. 7.4.2. Deflections of an Involute Plate with Uniform Pressure on the Convex Side.

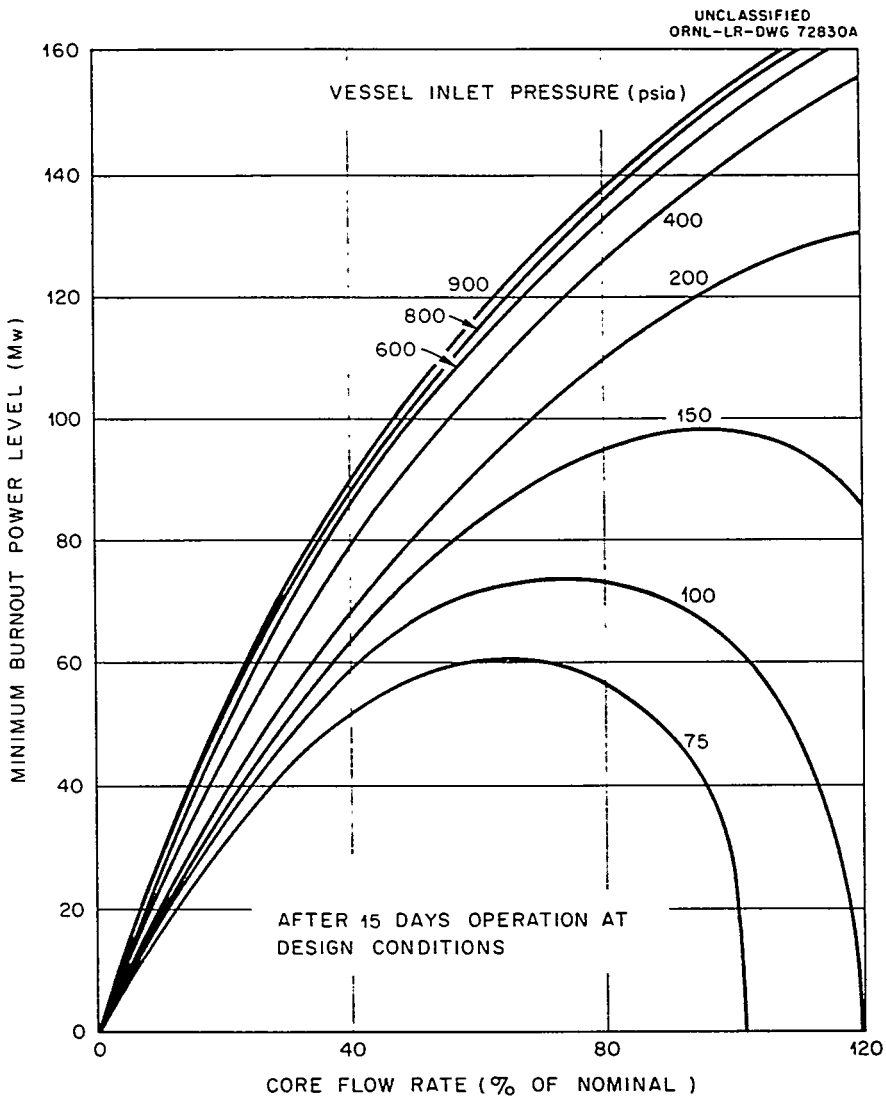

Fig. 7.5.1. Effect of Operating Pressure and Flow Rate on Burnout Power Levels.

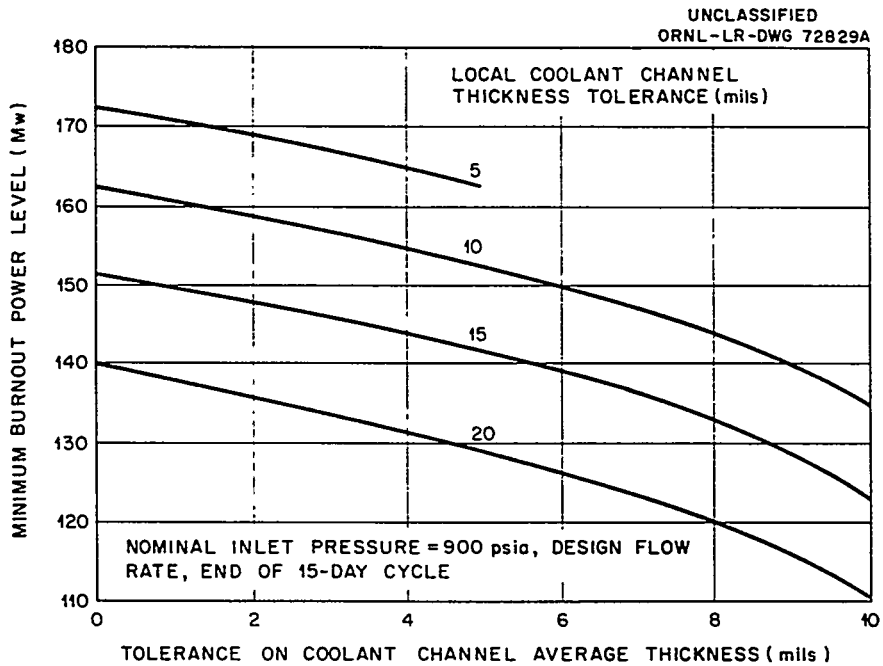

Fig. 7.5.2. Effect of Coolant-Channel-Thickness Tolerances on Burnout Power Levels.

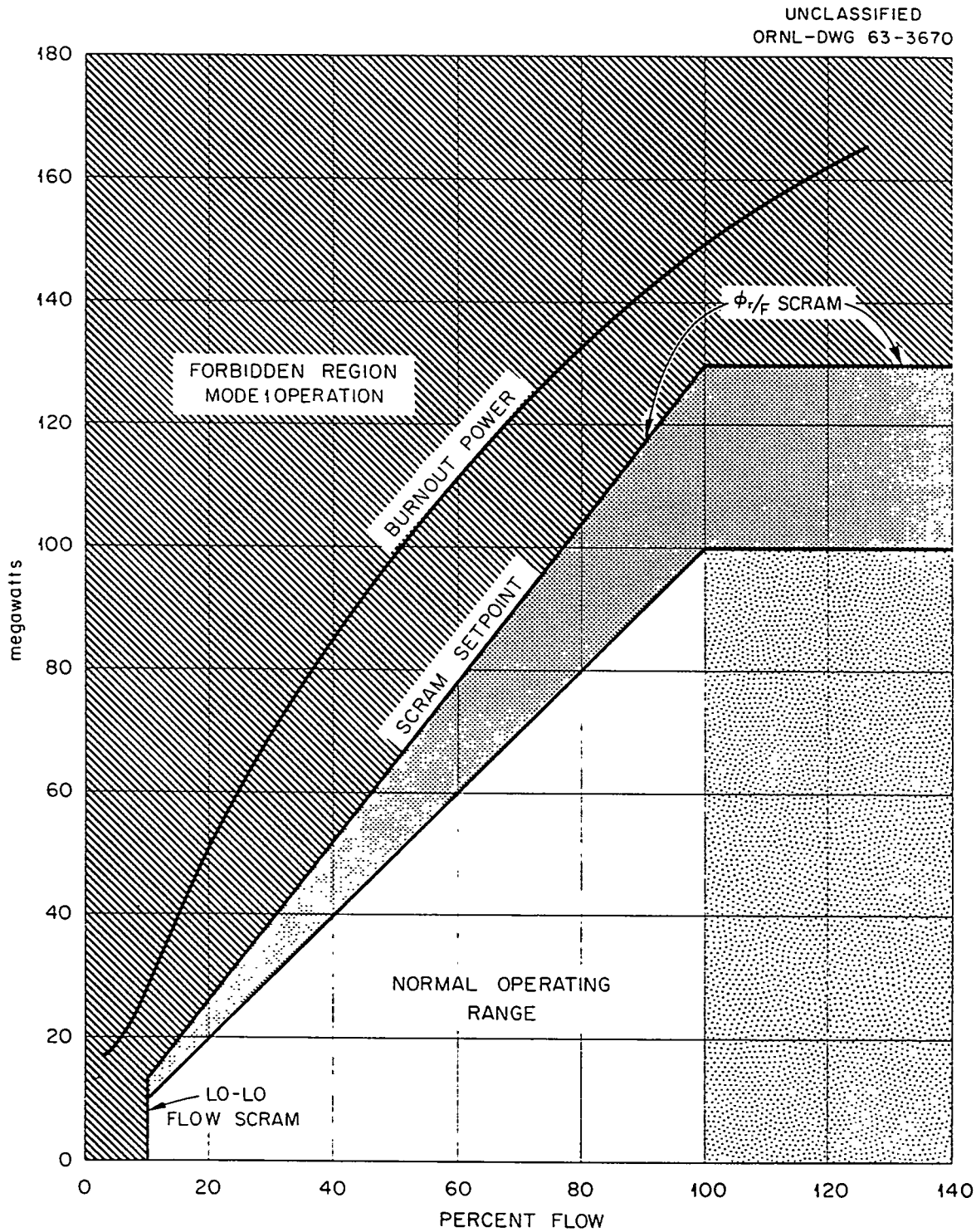

Fig. 8.1.1. Allowable Operating Range.

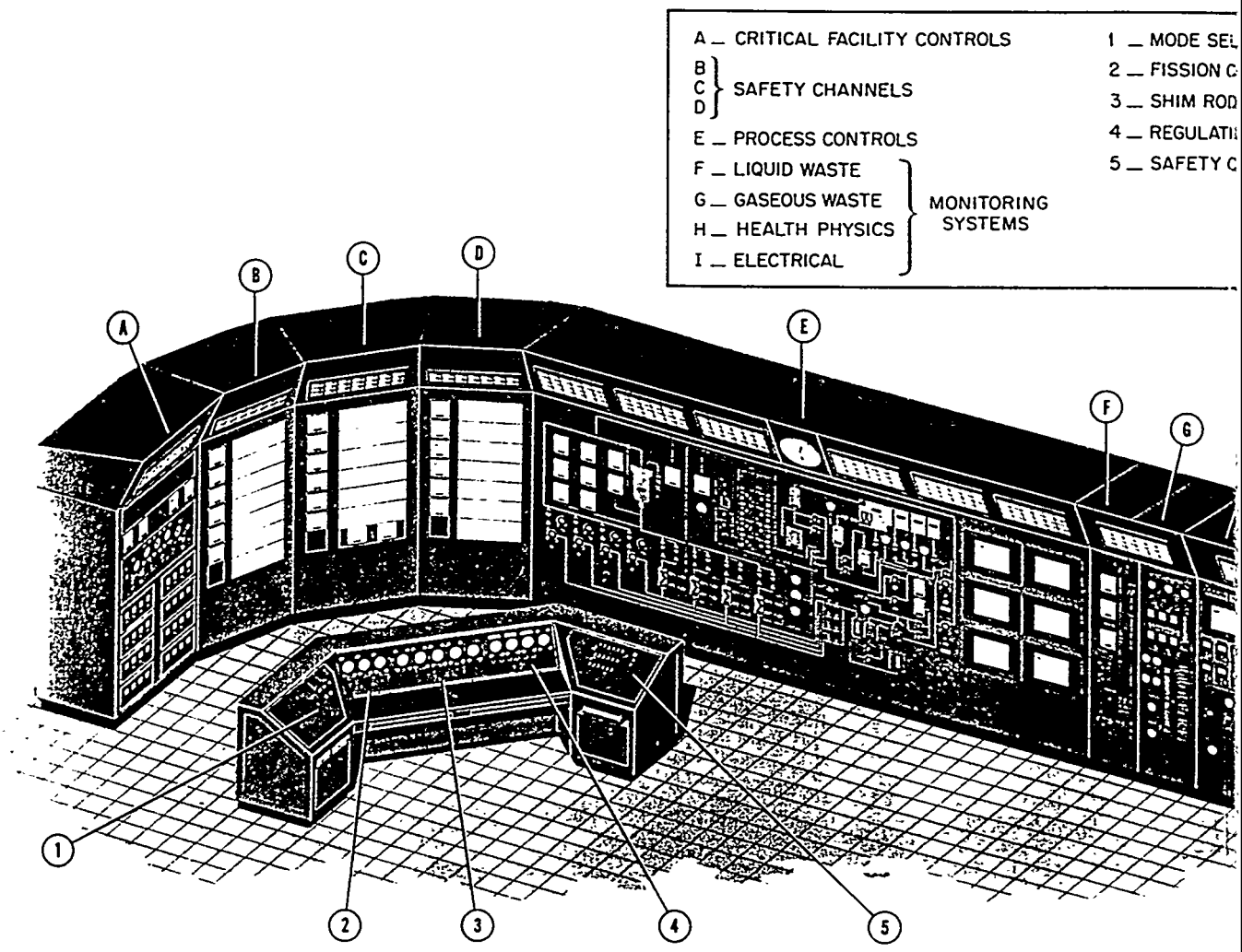

Fig. 8.1.2. Control Room.

UNCLASSIFIED
ORNL-DWG 63-3725

TION, ETC.
MBER CONTROLS
NTROL
SYSTEM CONTROLS
NNEL TESTING

UNCLASSIFIED
ORNL-DWG 63-3724

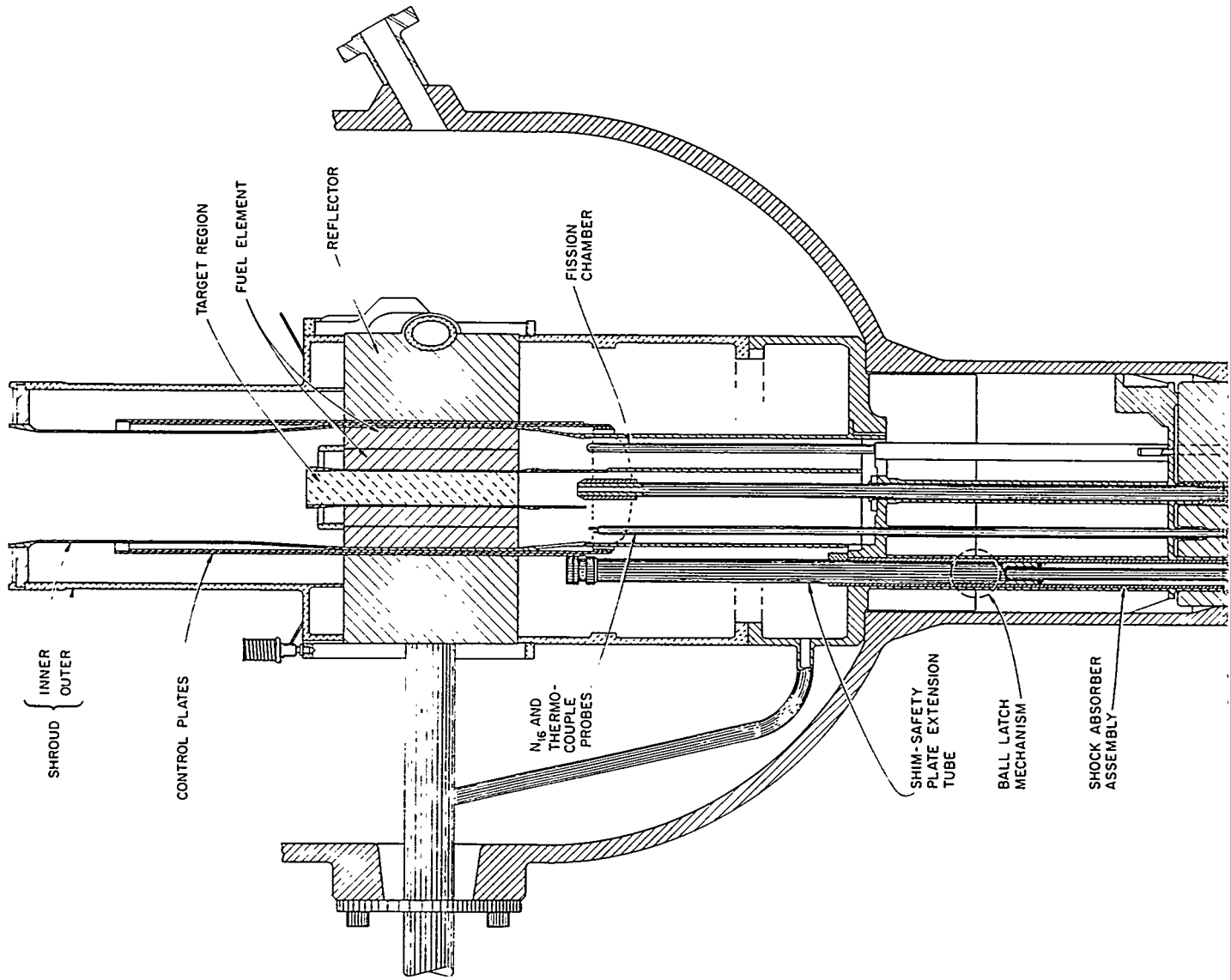

Fig. 8.2.1(*a*). Control

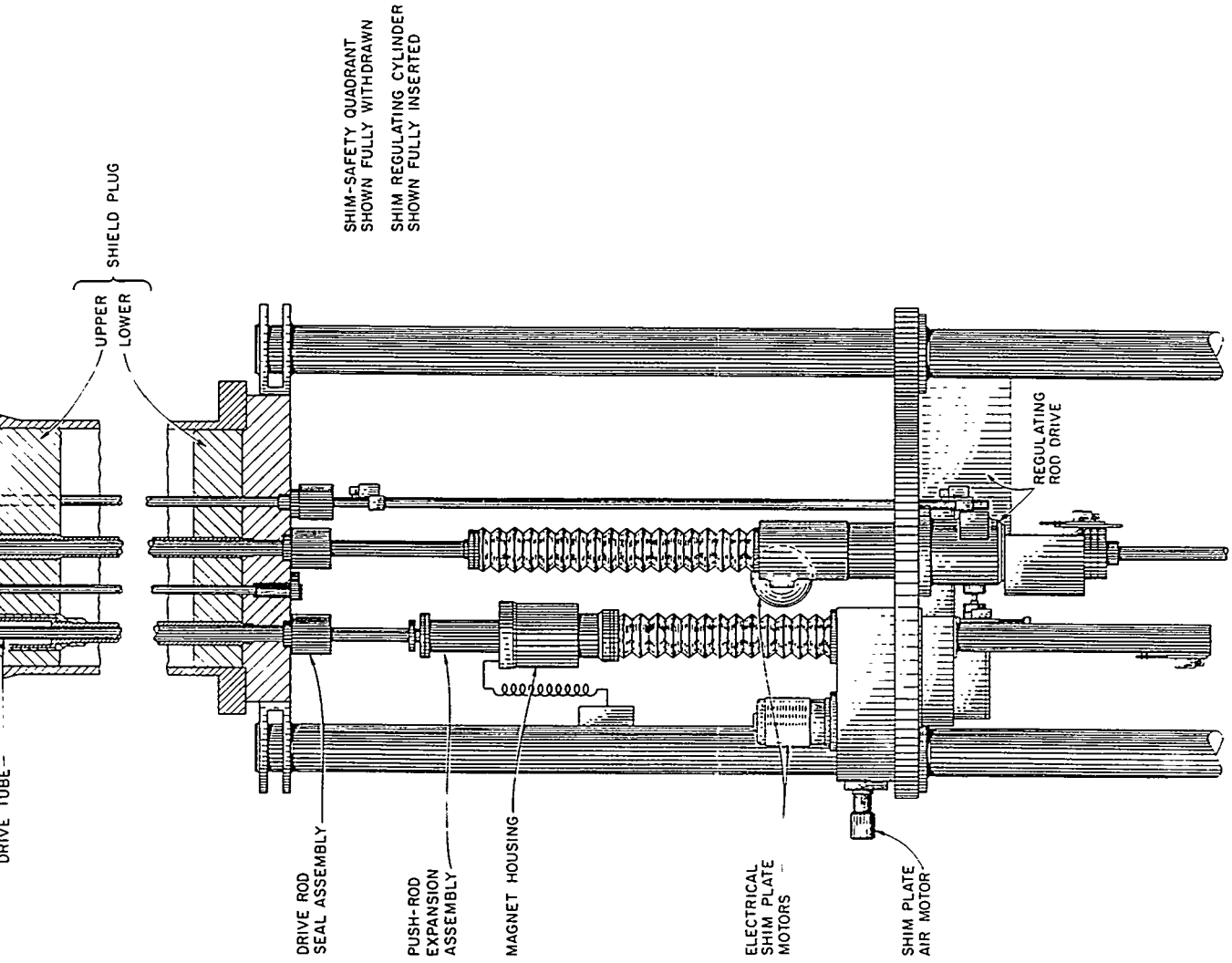
SHIM-SAFETY QUADRANT SHOWN FULLY WITHDRAWN
SHIM REGULATING CYLINDER SHOWN FULLY INSERTED
SHIELD PLUG
UPPER
LOWER
DRIVE TUBE
DRIVE ROD SEAL ASSEMBLY
PUSH-ROD EXPANSION ASSEMBLY
MAGNET HOUSING
ELECTRICAL SHIM PLATE MOTORS
SHIM PLATE AIR MOTOR
REGULATING ROD DRIVE

ate Drives.

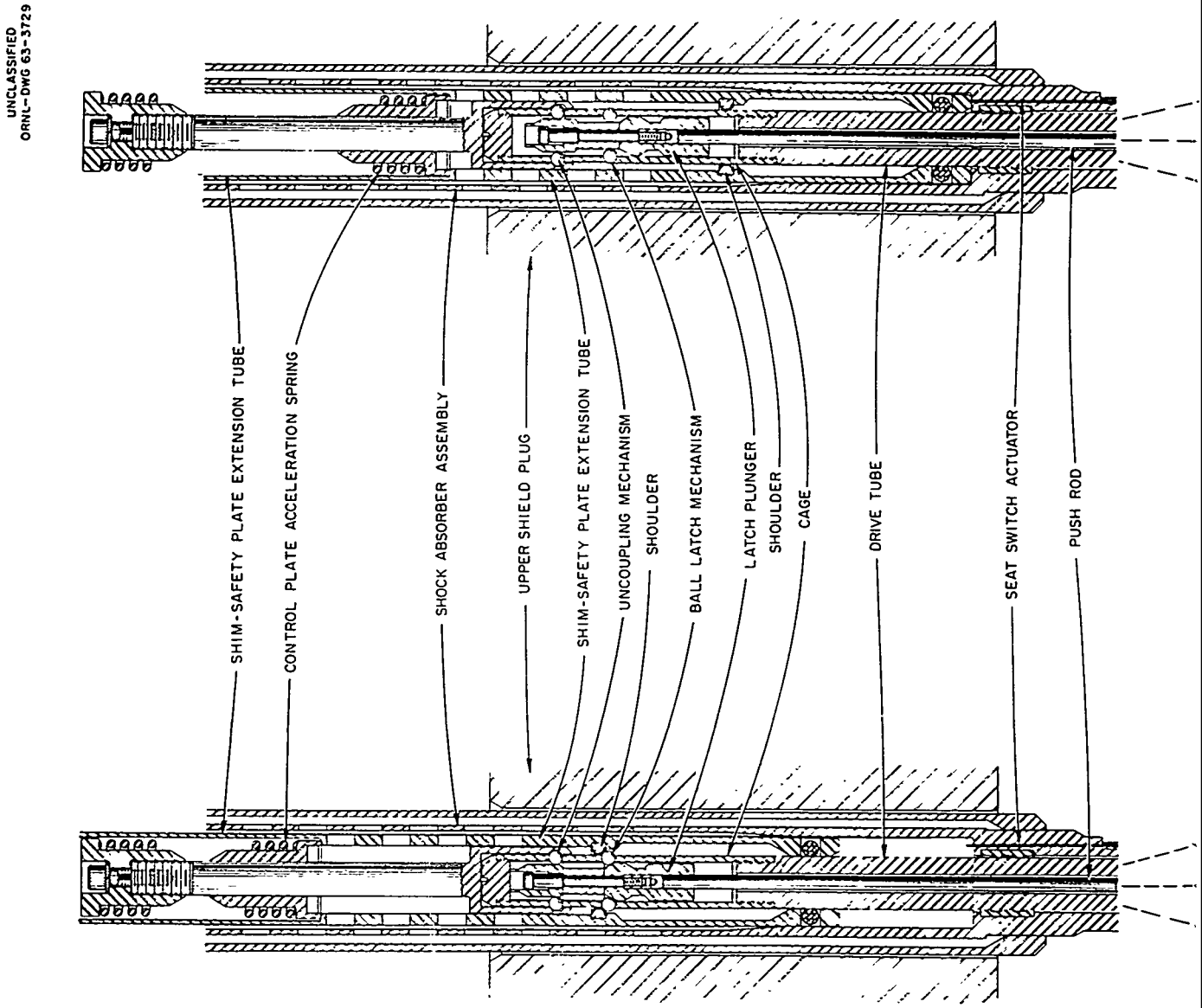

Fig. 8.2.1(*b*). Scram Pla

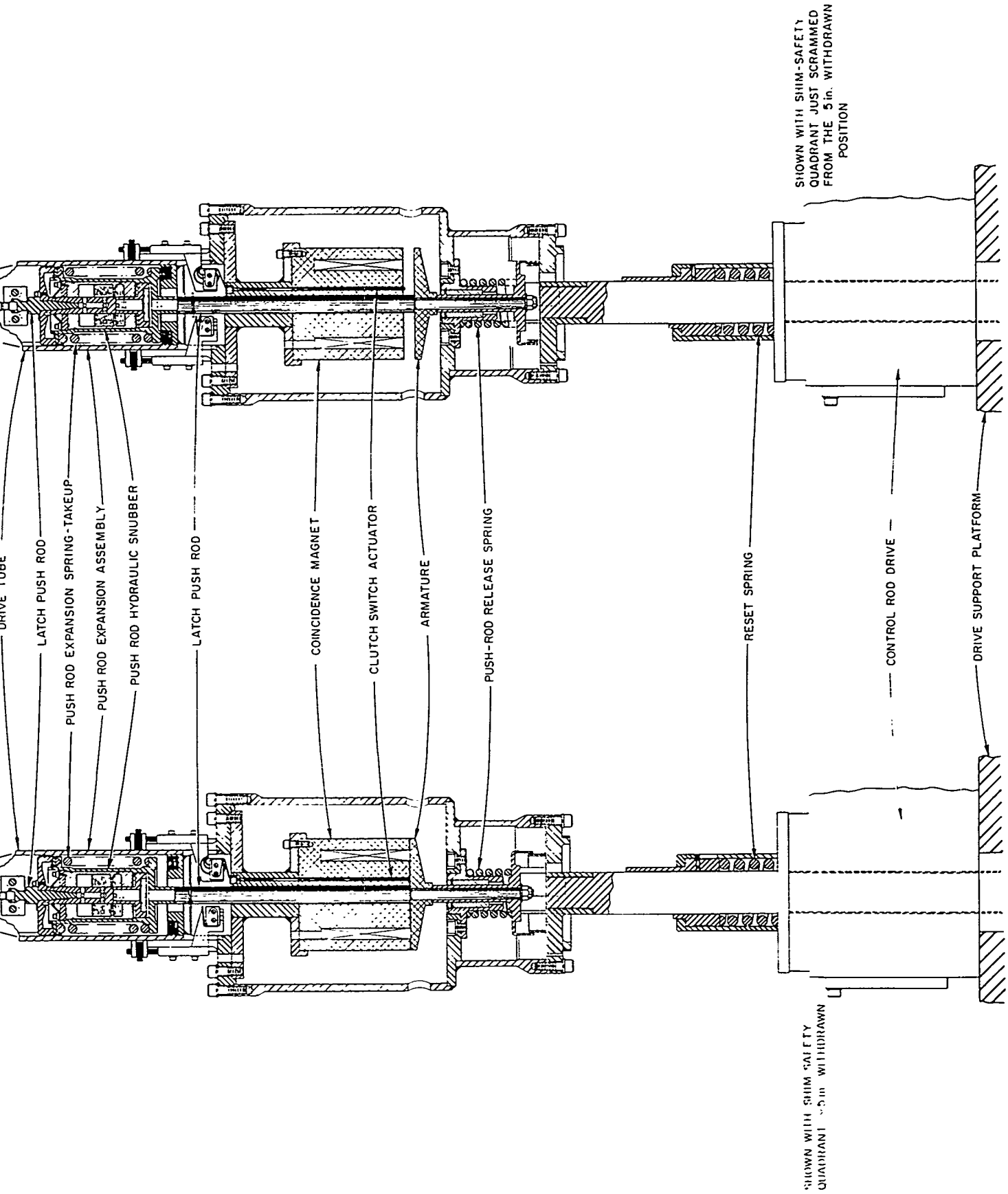

Magnet and Latch Mechanism.

UNCLASSIFIED
ORNL-LR-DWG 60099

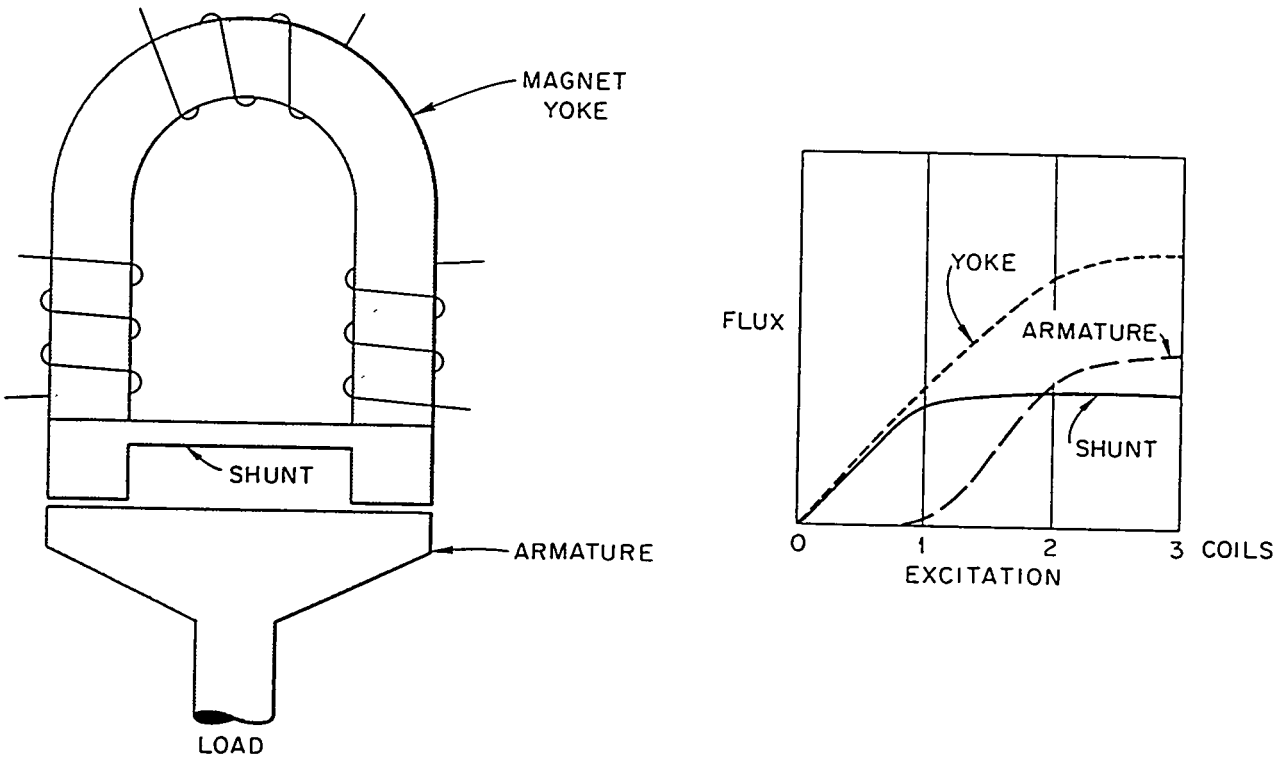

Fig. 8.2.2. Coincidence Magnet.

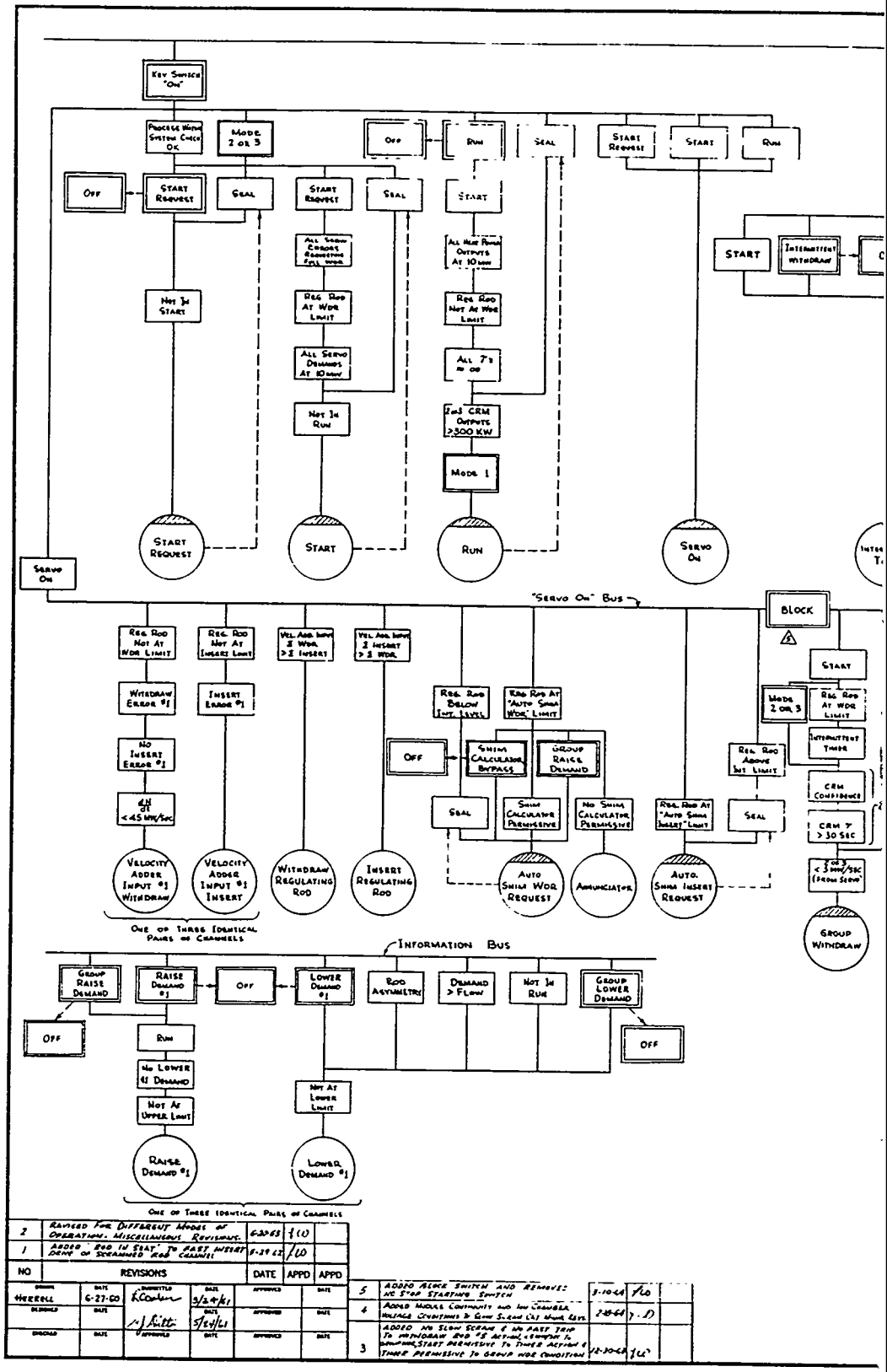
Key Switch "On"
Process Water System Check OK
Mode 2 or 3
Off
Run
Seal
Start Request
Start
Off
Start Request
Seal
Start Request
Seal
Start
All Show Crdms Rodstops Full Wdr
All Rod Power Outputs At 10 MW
Reg Rod At Wdr Limit
Reg Rod Not At Wdr Limit
All Servo Demands At 10 MW
All 7's In Off
Not In Start
Not In Run
2 of 3 CRM Outputs >300 KW
Mode 1
Start Request
Start
Run
Start
Intermittent Withdraw
Servo On
Servo On
"Servo On" Bus
Block
Reg Rod Not At Wdr Limit
Reg Rod Not At Insert Limit
Vel Add Input 2 Wdr > 2 Insert
Vel Add Input 2 Insert > 2 Wdr
Withdraw Error #1
Insert Error #1
No Insert Error #1
dH/dt < 45 MW/sec
Velocity Adder Input #1 Withdraw
Velocity Adder Input #1 Insert
Withdraw Regulating Rod
Insert Regulating Rod
One of Three Identical Pairs of Channels
Reg Rod Below Int. Limits
Reg Rod At "Auto Shim Wdr" Limit
Off
Shim Calculator Bypass
Group Raise Demand
Seal
Shim Calculator Permissive
No Shim Calculator Permissive
Auto Shim Wdr Request
Annunciator
Reg Rod At "Auto Shim Insert" Limit
Auto. Shim Insert Request
Start
Mode 2 or 3
Reg Rod At Wdr Limit
Intermittent Timer
Reg Rod Above Int Limit
Seal
CRM Confidence
CRM T > 30 Sec
< 3 MW/sec (From Slow)
Group Withdraw
Information Bus
Group Raise Demand
Raise Demand #1
Off
Lower Demand #1
Rod Asymmetry
Demand > Flow
Not In Run
Group Lower Demand
Off
Off
Run
No Lower #1 Demand
Not At Upper Limit
Not At Lower Limit
Raise Demand #1
Lower Demand #1
One of Three Identical Pairs of Channels
2 Revised For Different Modes of Operation. Miscellaneous Revisions. 6-27-65 JCO
1 Added "Rod In Seat" To Fast Insert Drive of Scrammed Rod Channel 8-29-62 JCO
NO REVISIONS DATE APPD APPD
Drawn Herrell Date 6-27-60
Designed Date
Checked Date
Approved Date
Approved Date
Approved Date
Approved Date
5 Added Block Switch and Remove: NC Stop Starting Switch 3-10-64 JCO
4 Added Module Continuity and Low Chamber Voltage Conditions To Slow Scram (A) Mode Rev 2-8-64 J.D.
3 Added No Slow Scram & No Fast Trip To Withdraw and 5 Actuation Lockout To Withdraw, Start Permissive To Three Action & Timer Permissive To Group Wdr Condition 12-30-63 JCO

Fi

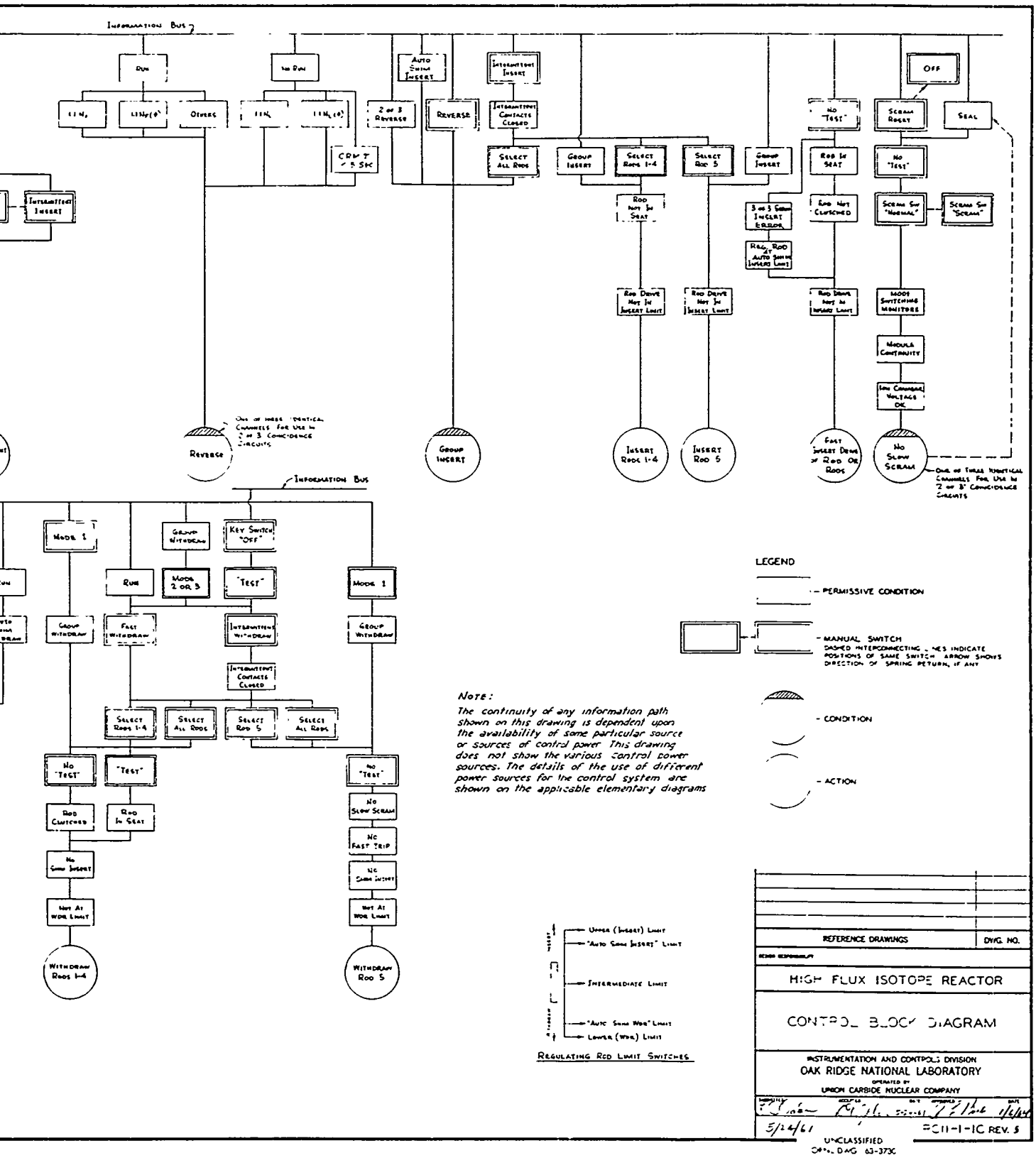

8.3.1. Block Diagram of Control System.

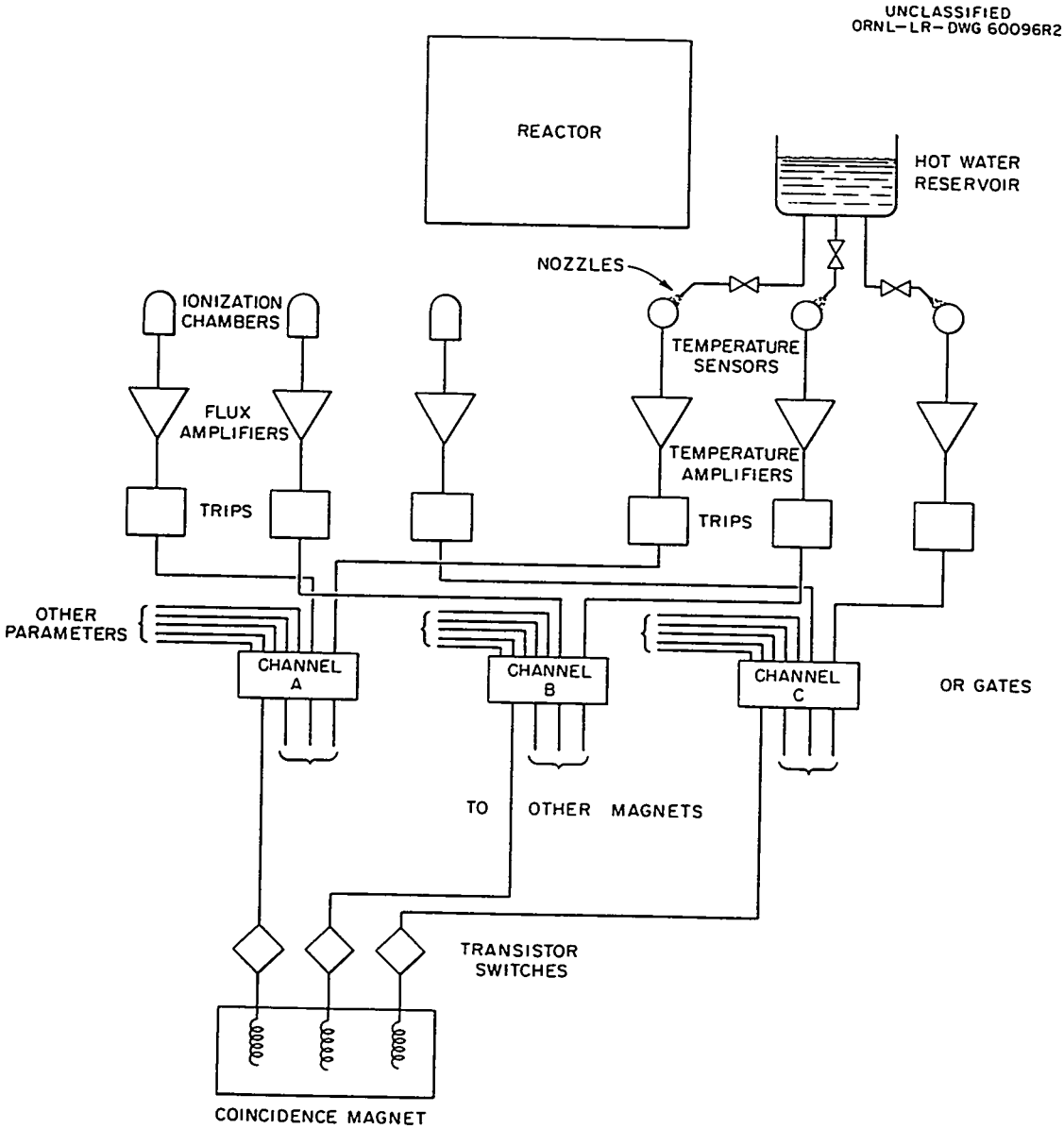

Fig. 8.4.1. Block Diagram of Safety System.

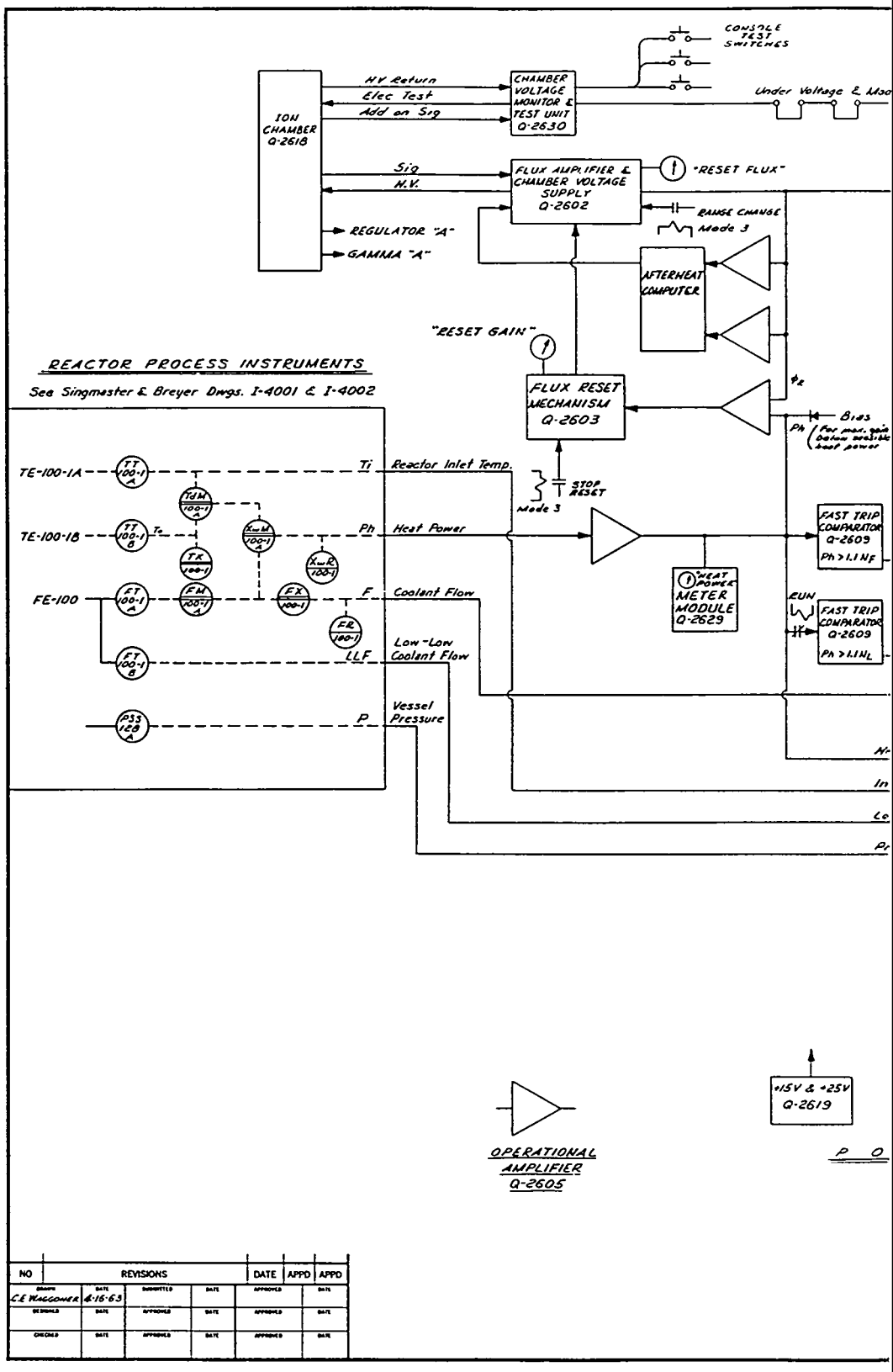
CONSOLE TEST SWITCHES
ION CHAMBER Q-2618
HV Return
Elec Test
Add on Sig
CHAMBER VOLTAGE MONITOR & TEST UNIT Q-2630
Under Voltage & Maso
Sig
H.V.
FLUX AMPLIFIER & CHAMBER VOLTAGE SUPPLY Q-2602
"RESET FLUX"
RANGE CHANGE
Mode 3
REGULATOR "A"
GAMMA "A"
AFTERHEAT COMPUTER
"RESET GAIN"
REACTOR PROCESS INSTRUMENTS
See Singmaster & Breyer Dwgs. I-4001 & I-4002
FLUX RESET MECHANISM Q-2603
Bias
Ph
TE-100-1A
Ti
Reactor Inlet Temp.
STOP RESET
Mode 3
TE-100-1B
Ph
Heat Power
FAST TRIP COMPARATOR Q-2609
Ph > 1.1 NF
HEAT POWER METER MODULE Q-2629
FE-100
F
Coolant Flow
RUN
FAST TRIP COMPARATOR Q-2609
Ph > 1.1 NL
LLF
Low-Low Coolant Flow
Vessel Pressure
P
OPERATIONAL AMPLIFIER Q-2605
+15V & +25V Q-2619
NO
REVISIONS
DATE
APPD
APPD
C.E. WAGGONER
4-16-63

Fig.

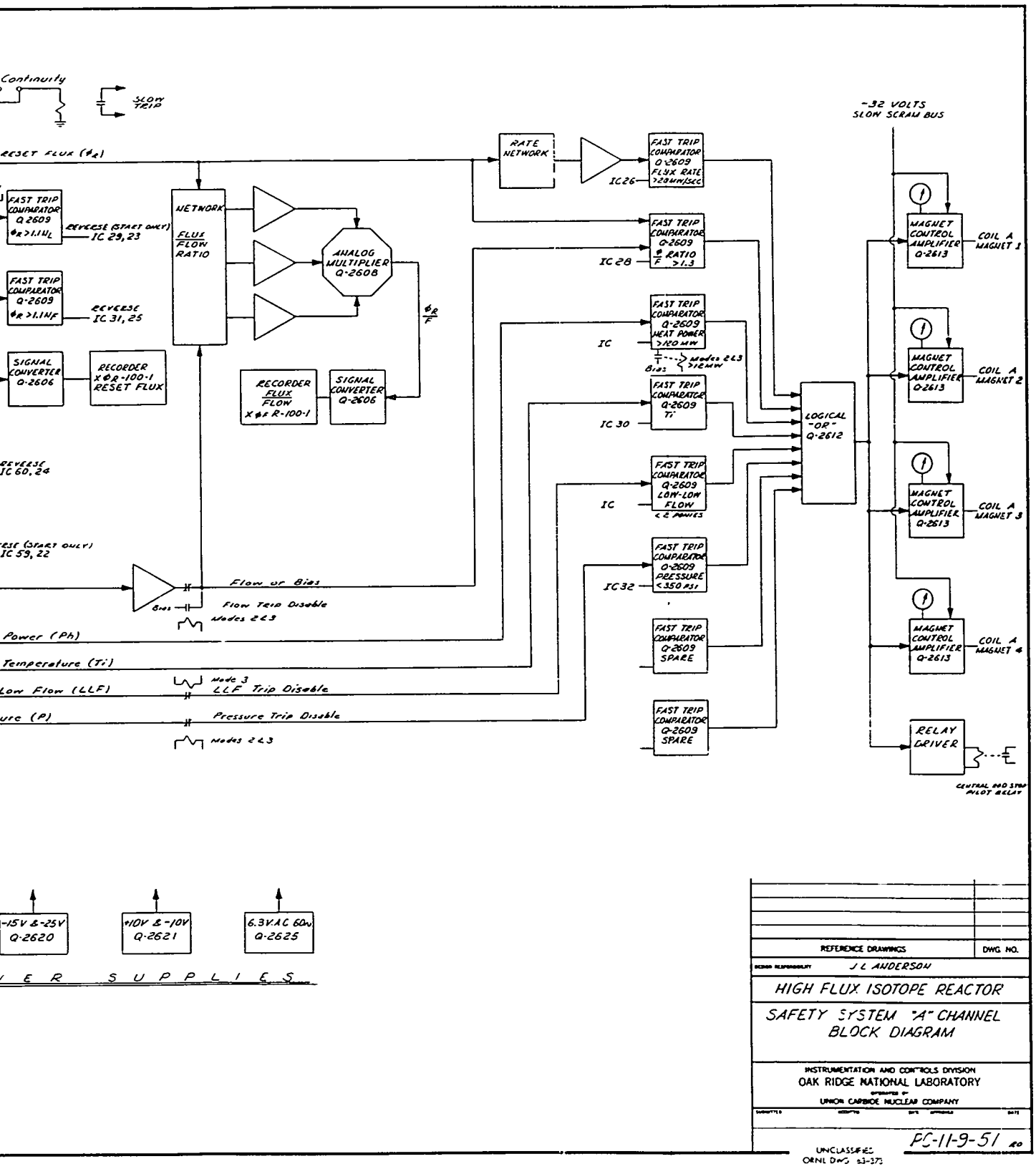

4.2. Block Diagram of Safety Channel A.

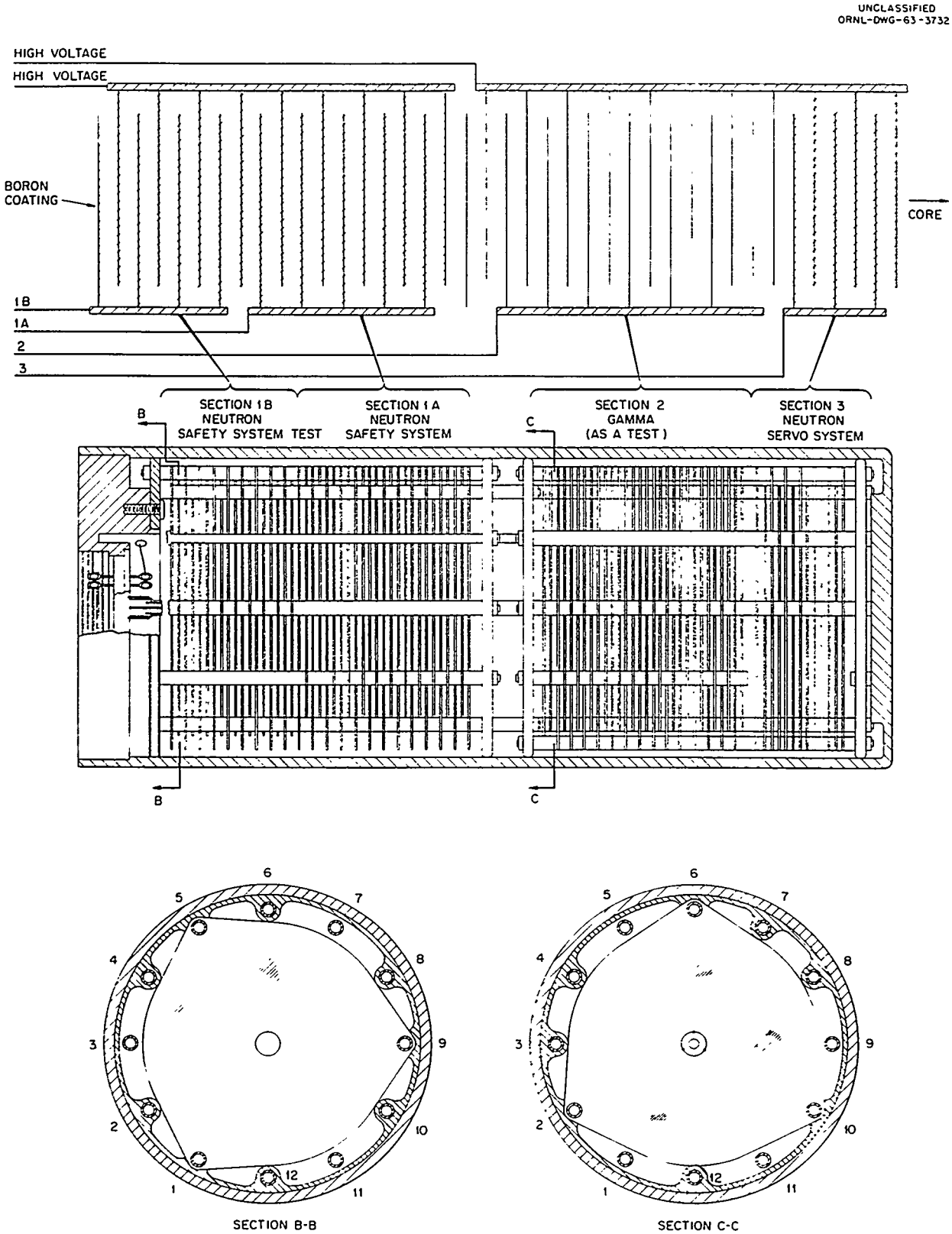

Fig. 8.5.1. Multisection Ionization Chamber.

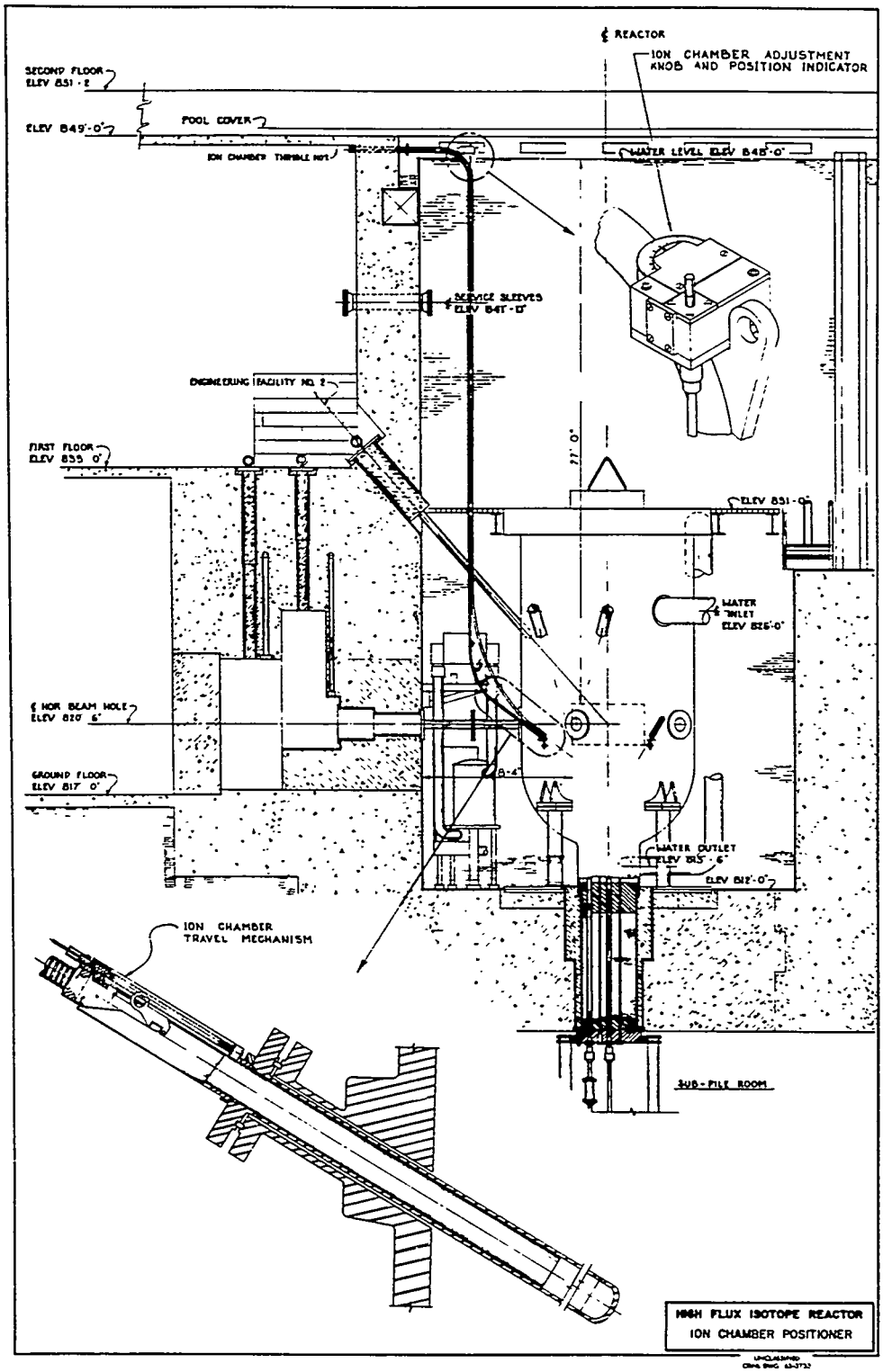

Fig. 8.5.2. Ion Chamber Positioning Mechanism.

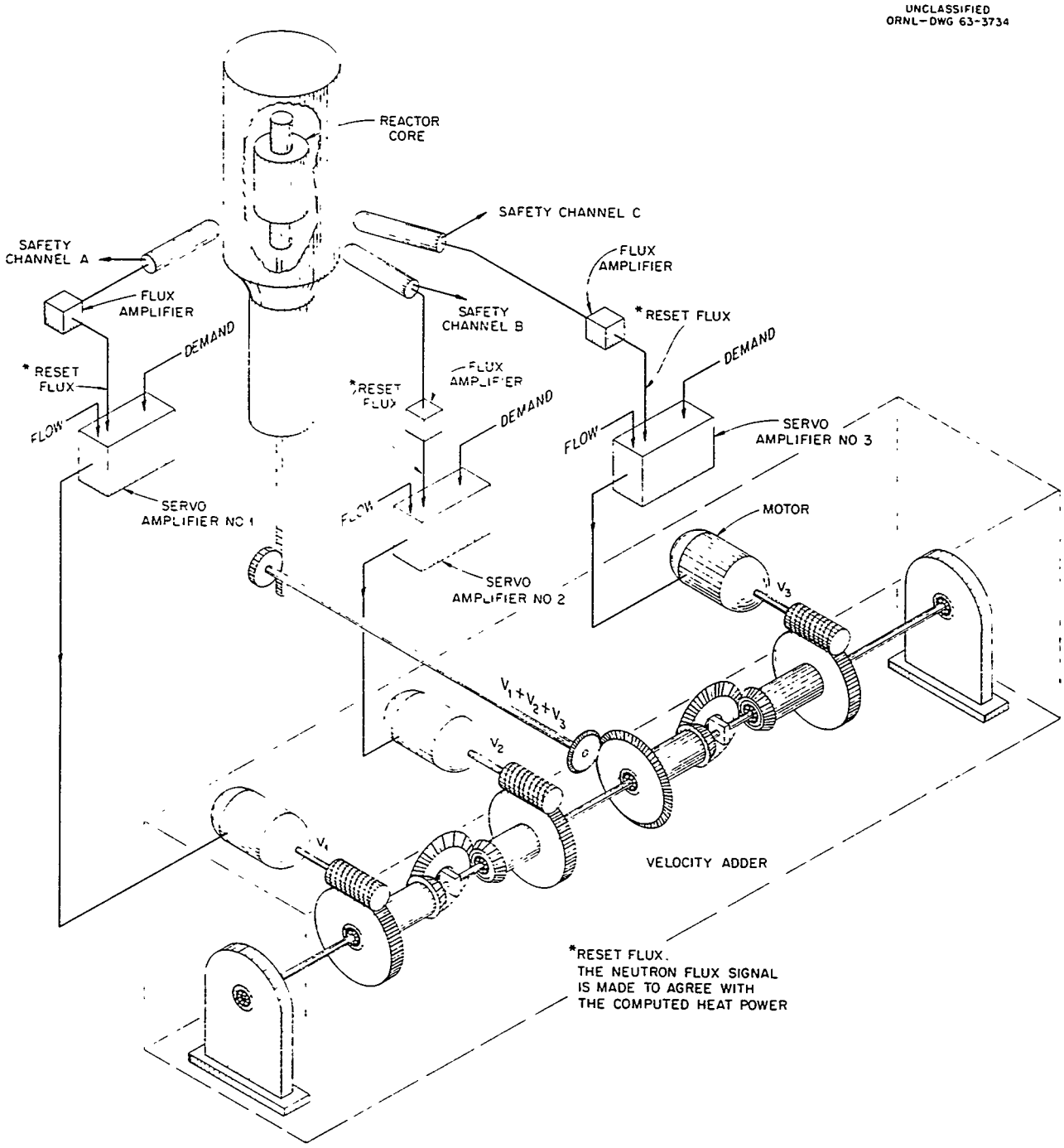

Fig. 8.5.3. Multiple Channel Regulating System.

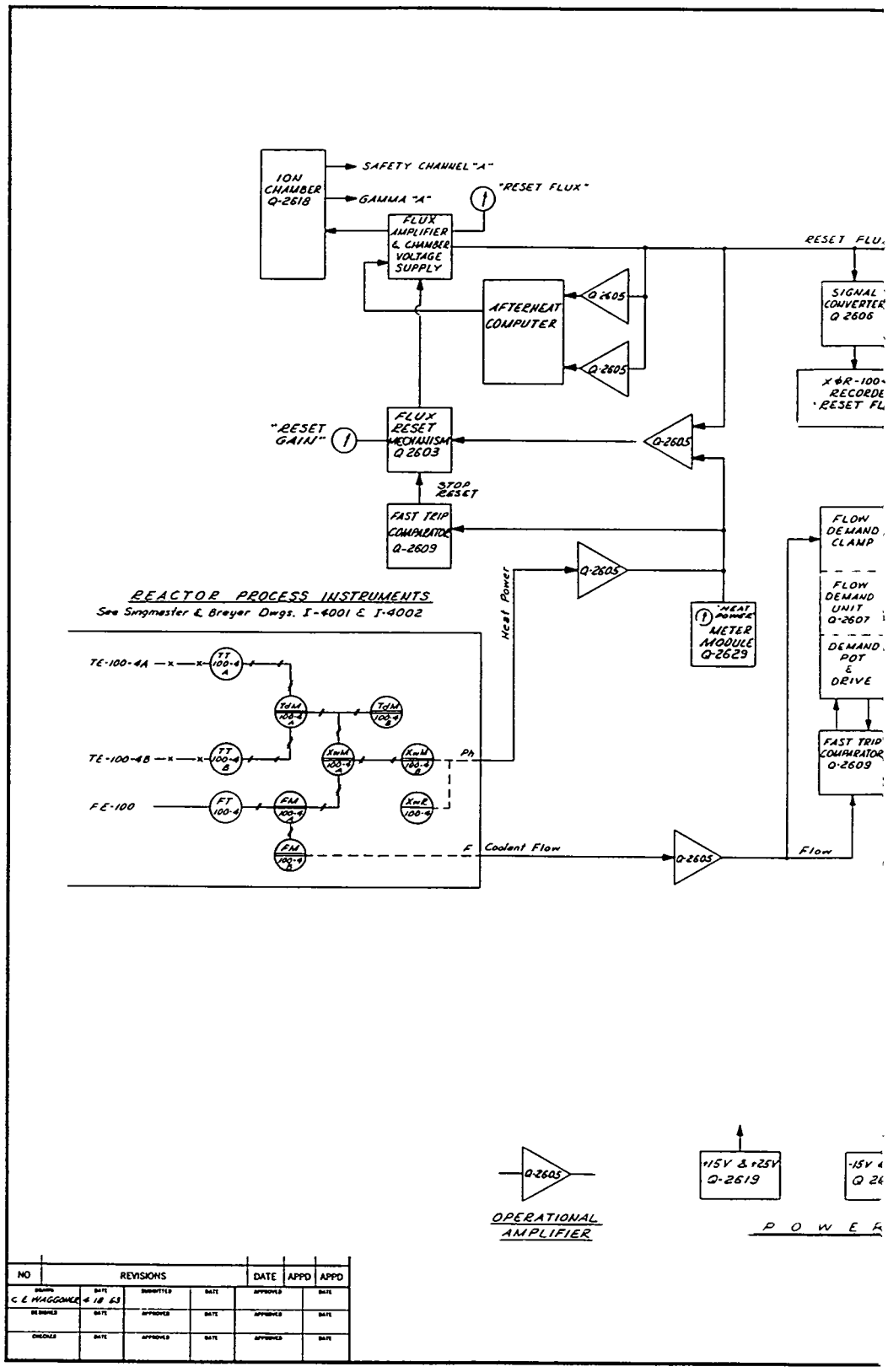
ION CHAMBER Q-2618
SAFETY CHANNEL "A"
GAMMA "A"
"RESET FLUX"
FLUX AMPLIFIER & CHAMBER VOLTAGE SUPPLY
RESET FLU
AFTERHEAT COMPUTER
Q-2605
Q-2605
SIGNAL CONVERTER Q 2606
X&R-100
RECORDE
RESET FL
"RESET GAIN"
FLUX RESET MECHANISM Q 2603
Q-2605
STOP RESET
FAST TRIP COMPARATOR Q-2609
FLOW DEMAND CLAMP
FLOW DEMAND UNIT Q-2607
DEMAND POT & DRIVE
FAST TRIP COMPARATOR Q-2609
Q-2605
Heat Power
"HEAT POWER" METER MODULE Q-2629
REACTOR PROCESS INSTRUMENTS
See Singmaster & Breyer Dwgs. I-4001 & I-4002
TE-100-4A
TT 100-4 A
TdM 100-4 A
TdM 100-4
TE-100-4B
TT 100-4 B
XmM 100-4 A
XmM 100-4 B
Ph
FE-100
FT 100-4
FM 100-4 A
XmE 100-4
FM 100-4 B
F Coolant Flow
Q-2605
Flow
Q-2605
OPERATIONAL AMPLIFIER
+15V & +25V Q-2619
-15V
P O W E R
NO
REVISIONS
DATE
APPD
APPD
C. E. WAGGONER
4 18 63
DATE
APPROVED
DESIGNED
CHECKED

Fig.

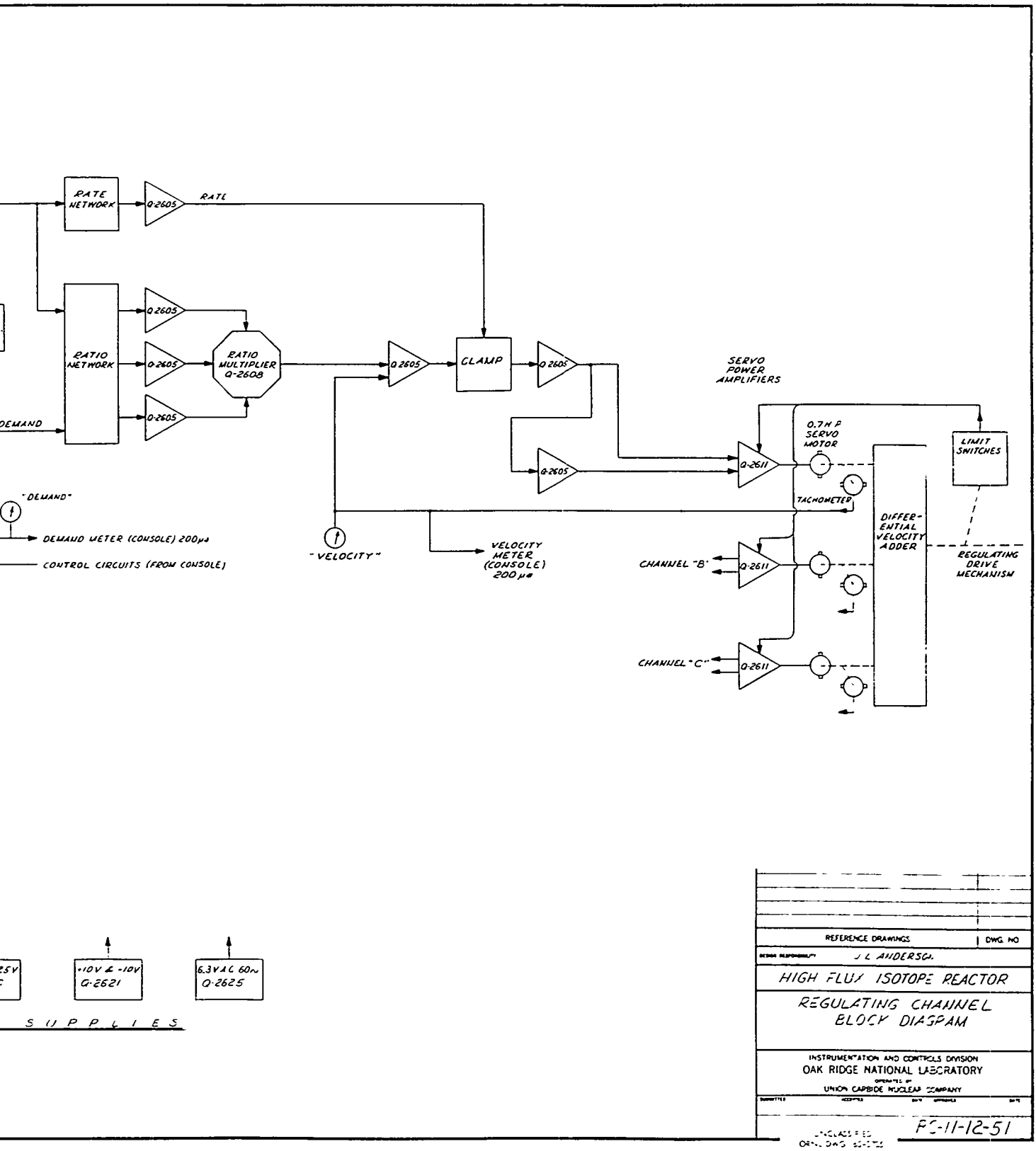

5.4. Block Diagram of Regulating Channel A.

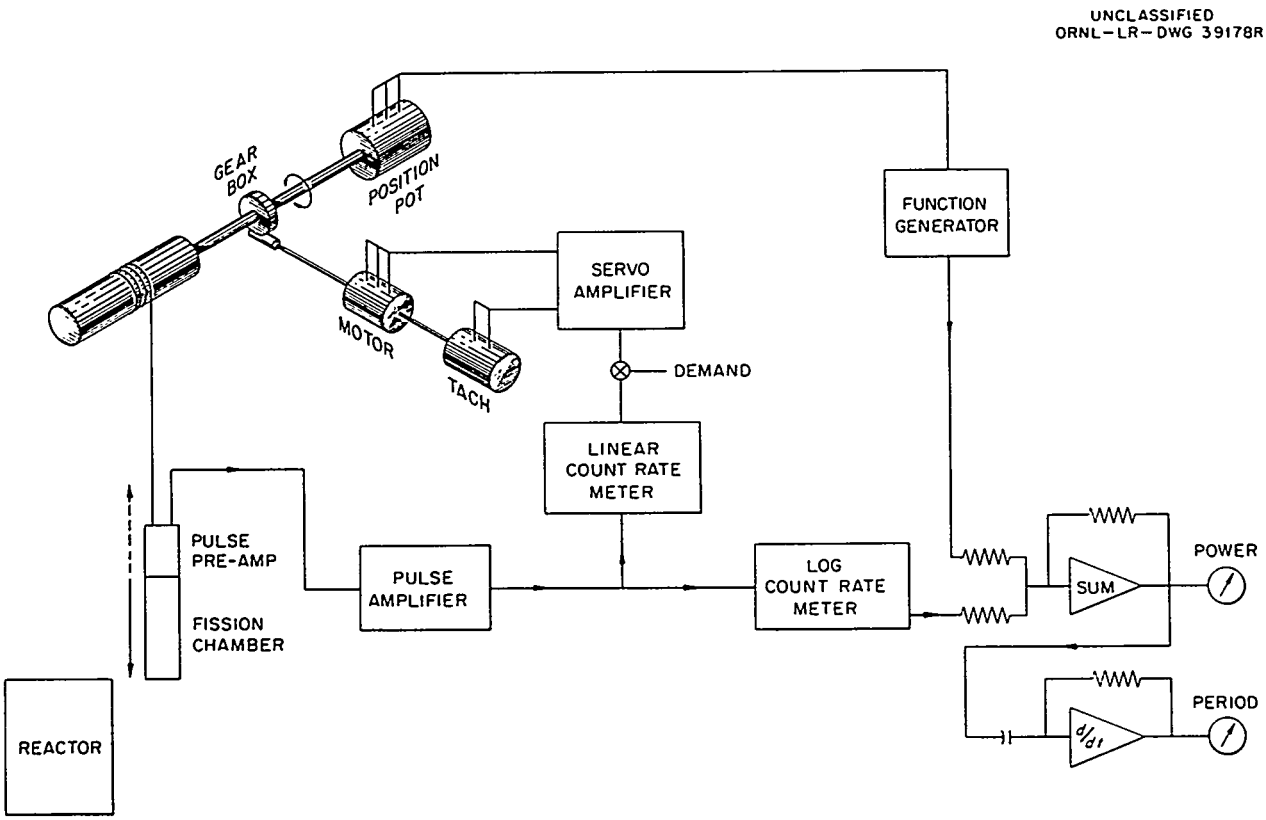

Fig. 8.5.5. Wide-Range Startup Channel Block Diagram.

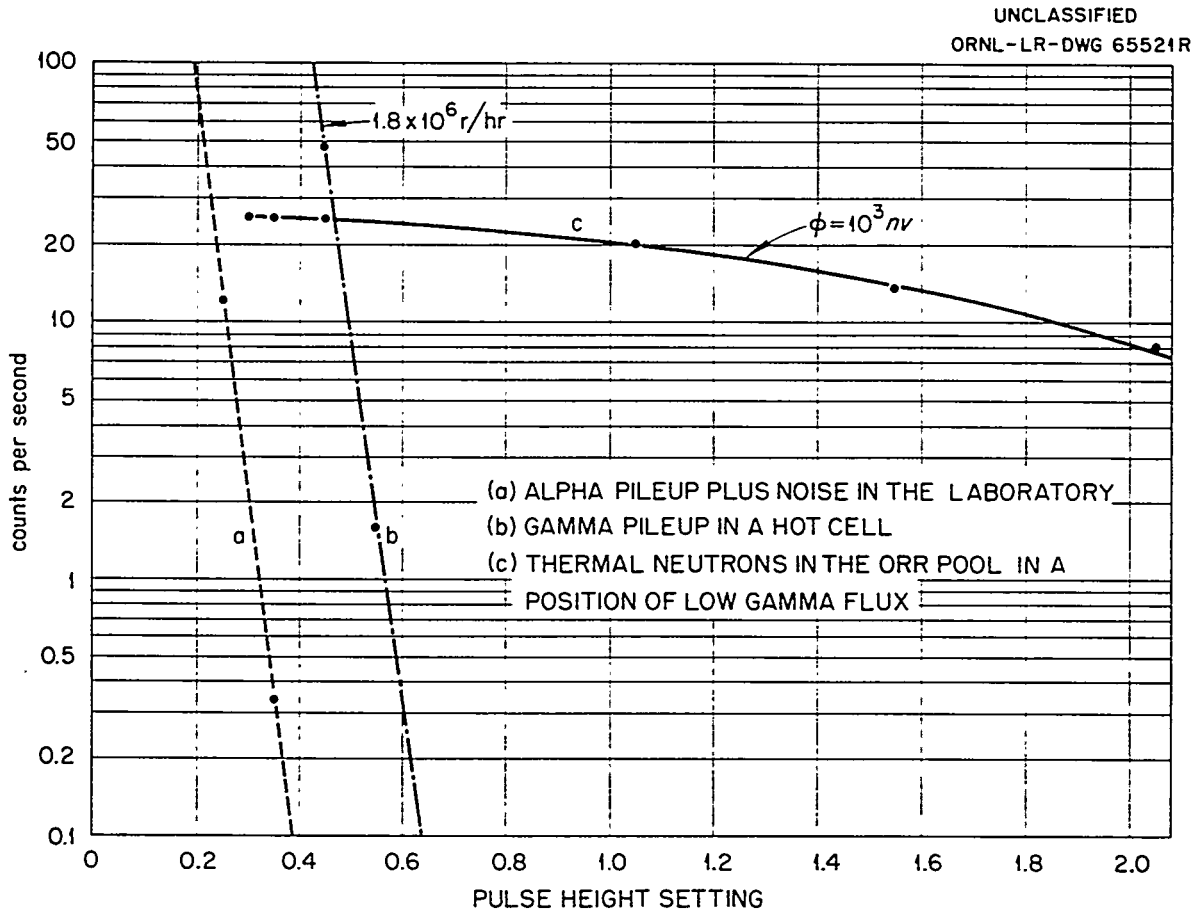

Fig. 8.5.6. Small Fission Chamber Pulse-Height Characteristics.

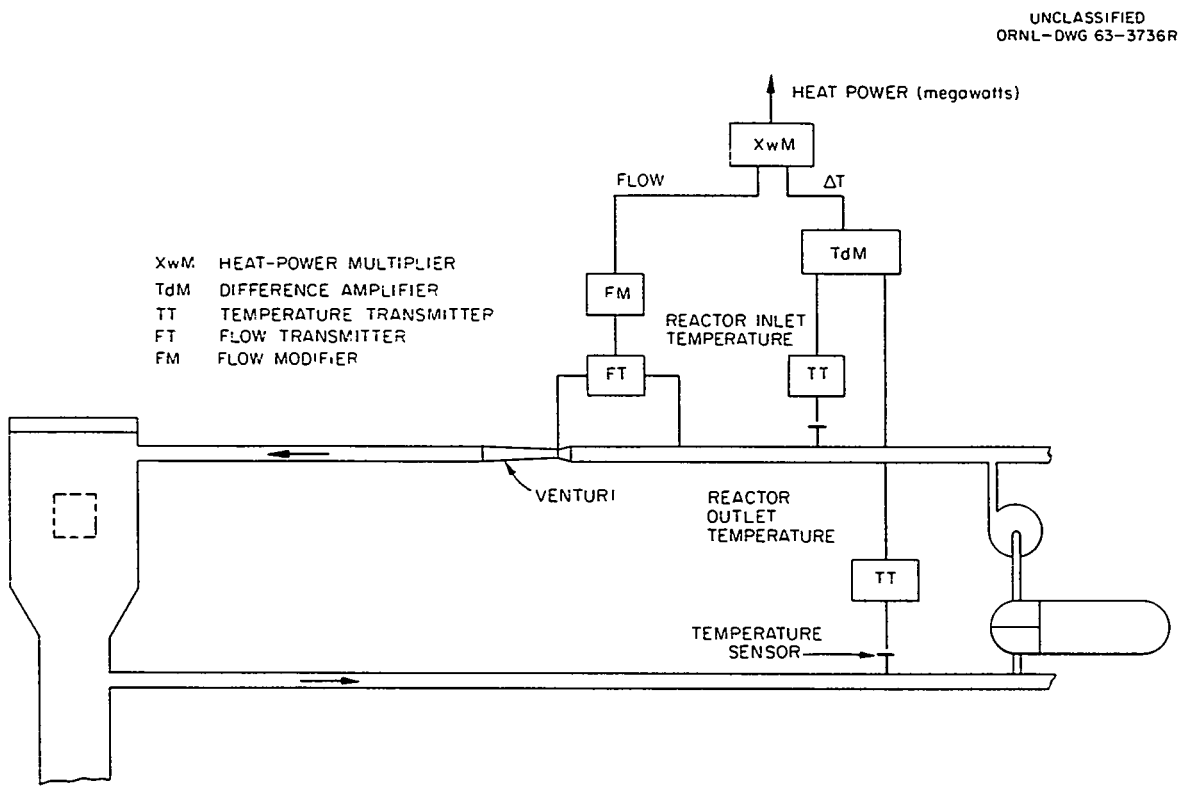

Fig. 8.6.1. Typical Heat-Power Computer Block Diagram.

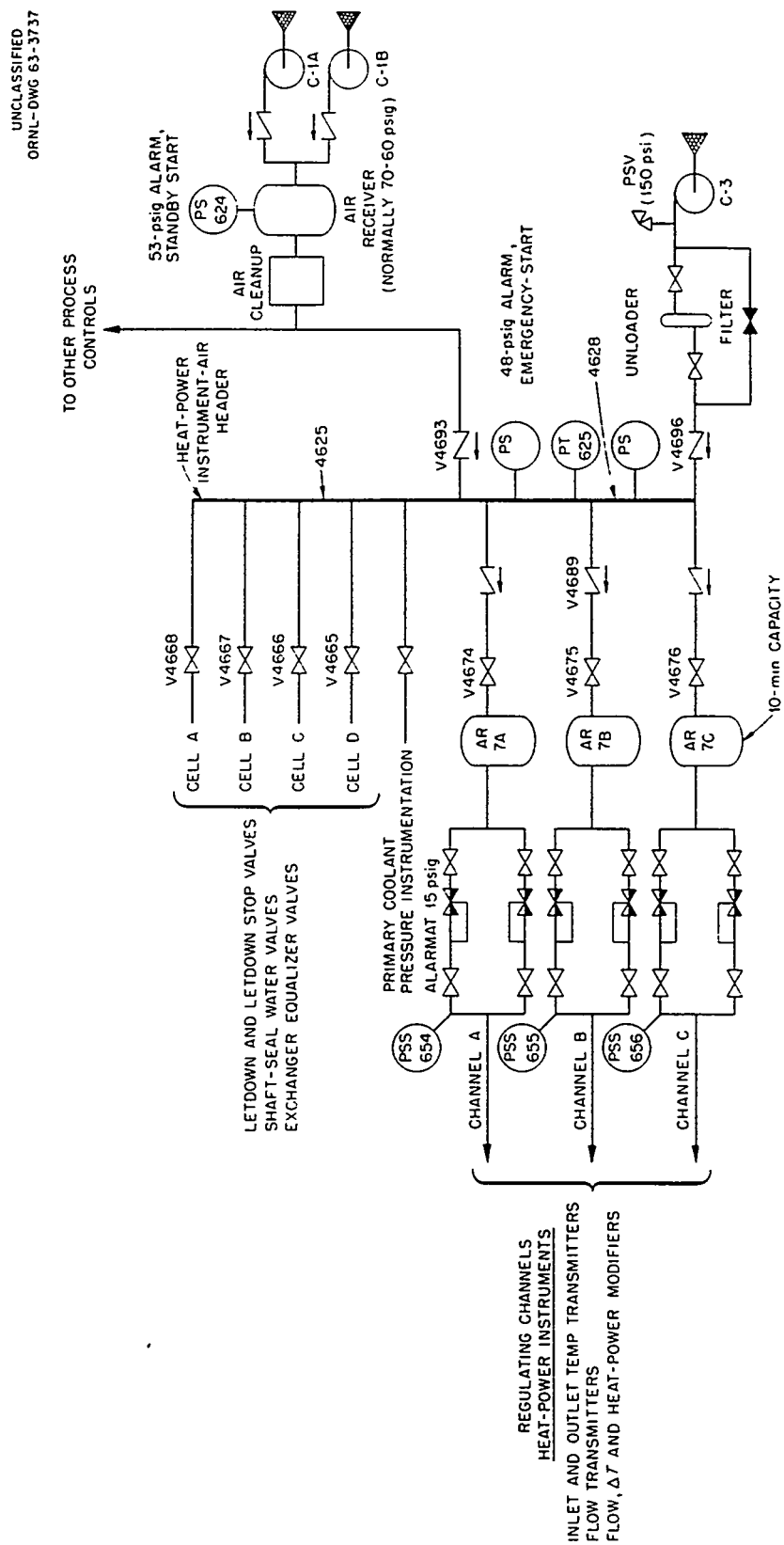

Fig. 8.6.2. Simplified Block Diagram of Instrument Air System.

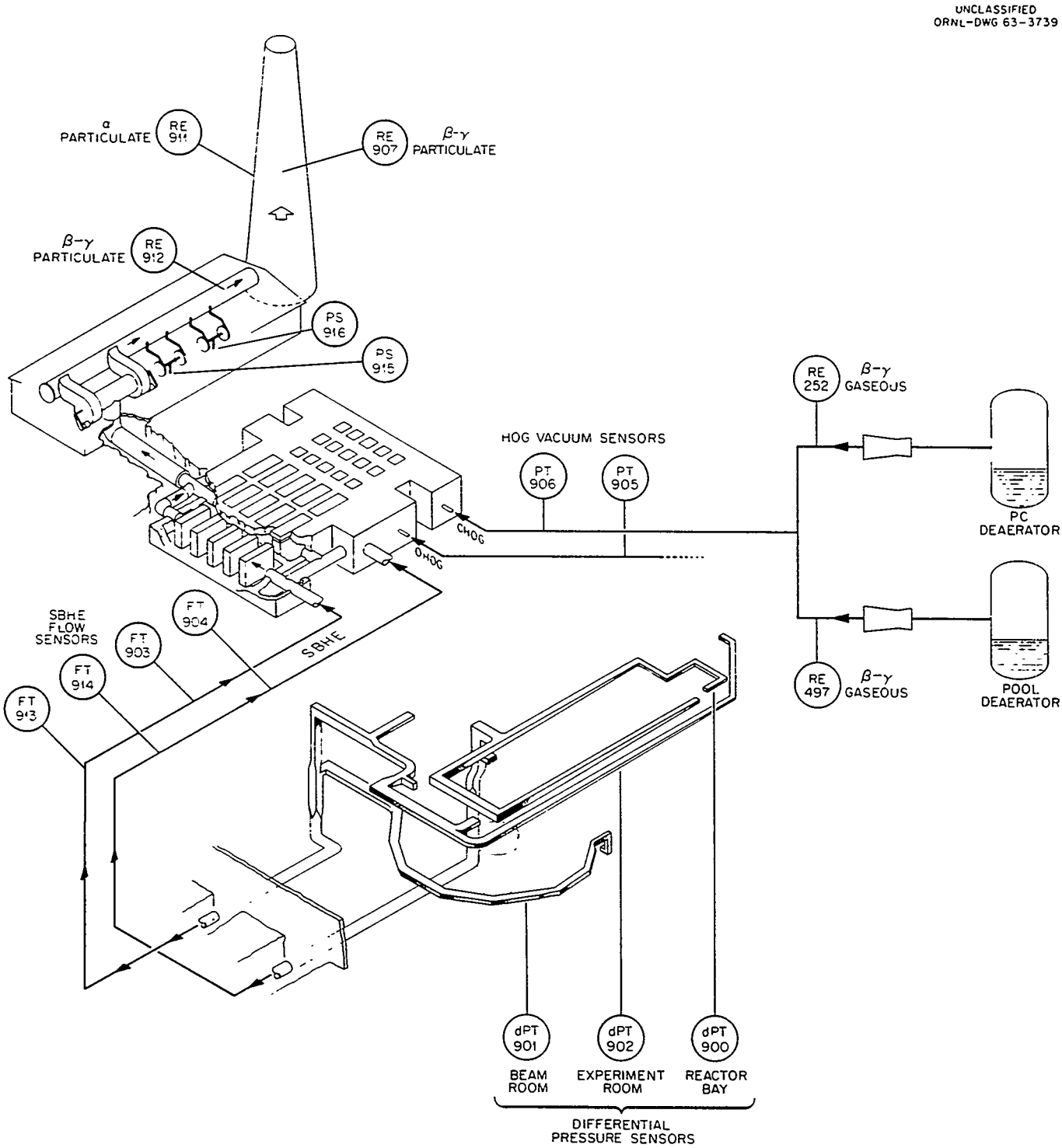

Fig. 8.7.1. Gaseous-Waste Monitoring System.

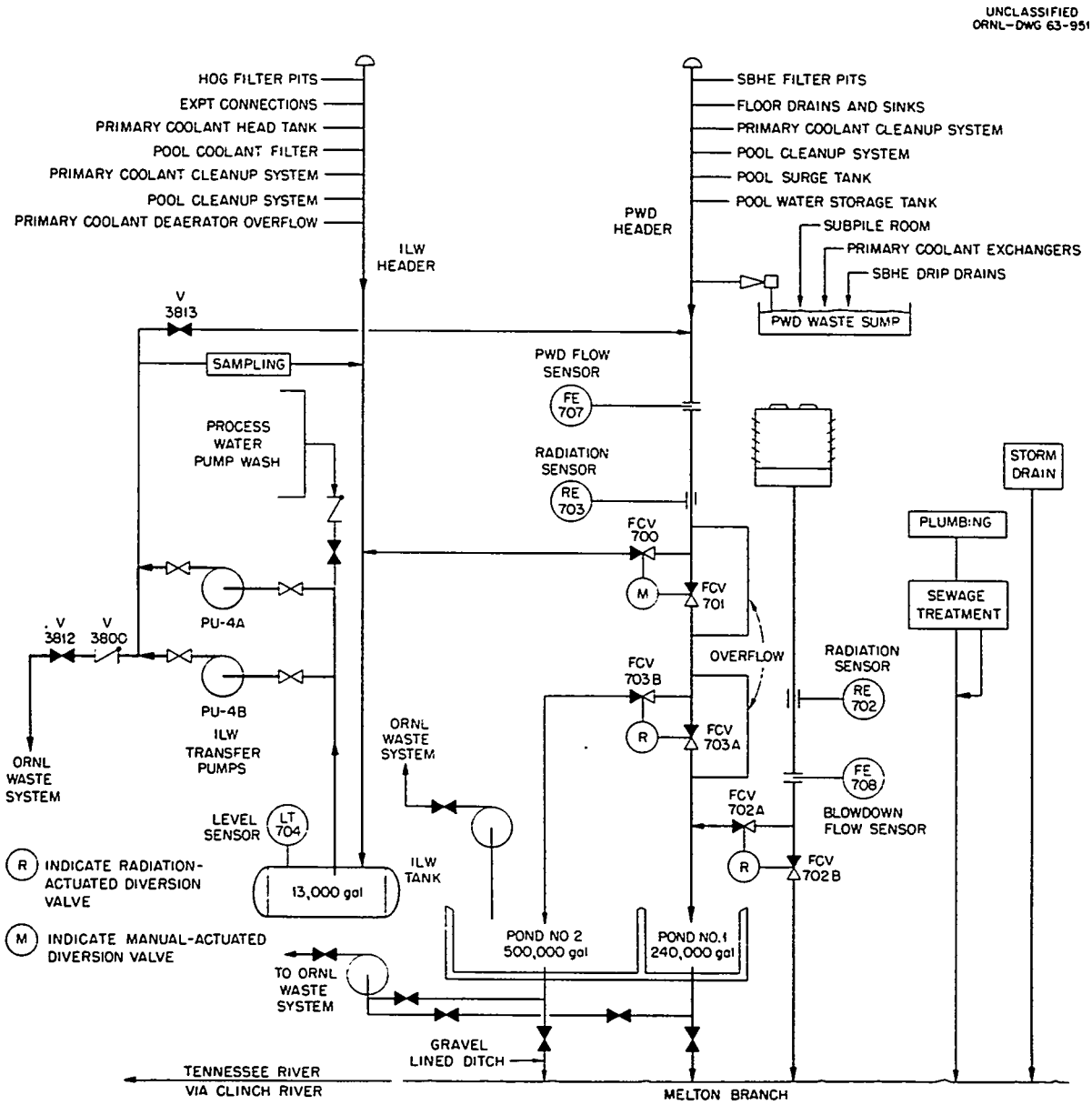

Fig. 8.7.2. Liquid-Waste Monitoring System.

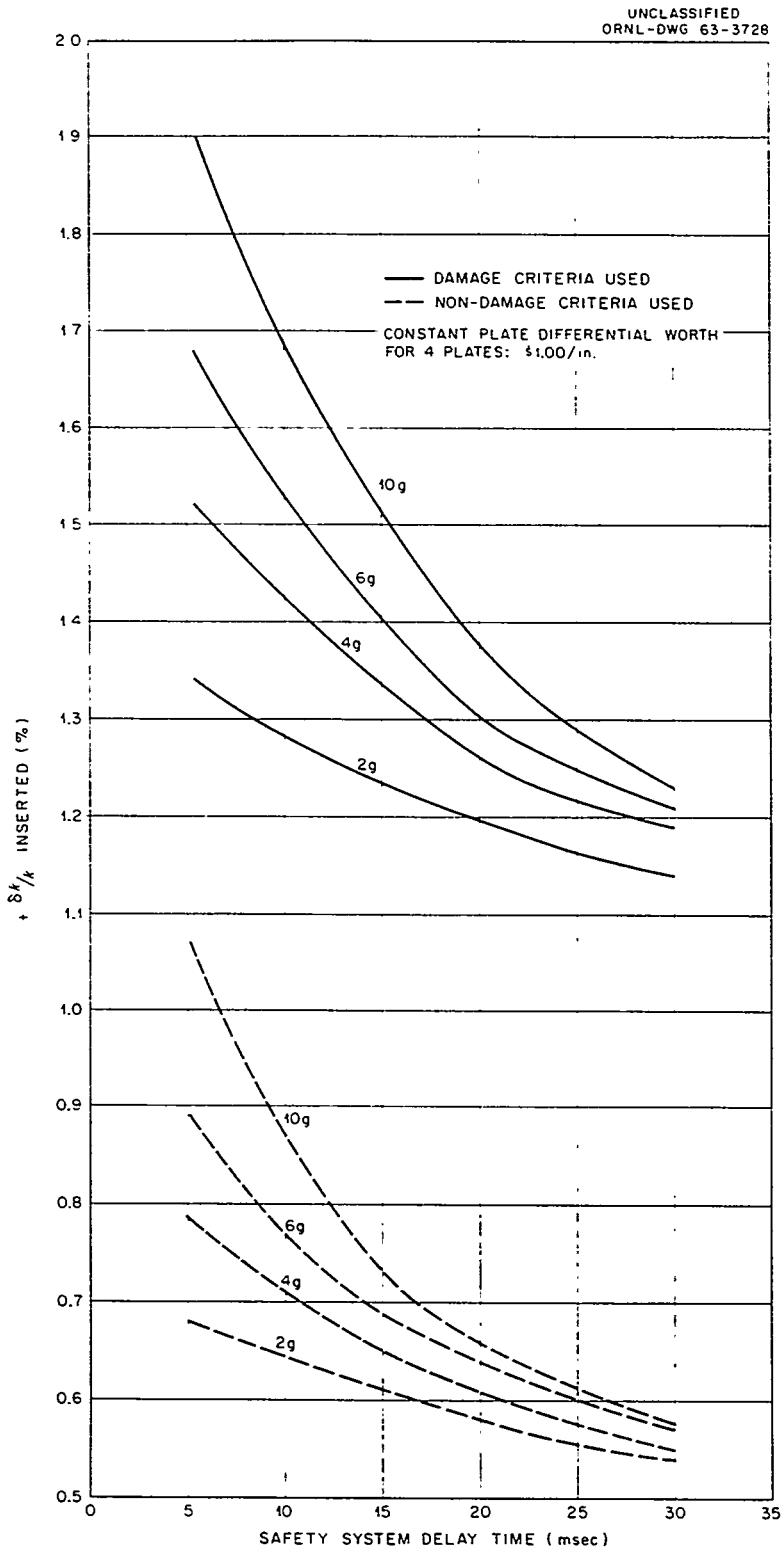

Fig. 8.8.1. Permissible $\Delta k/k$ vs Safety System Delay – Beginning of Cycle.

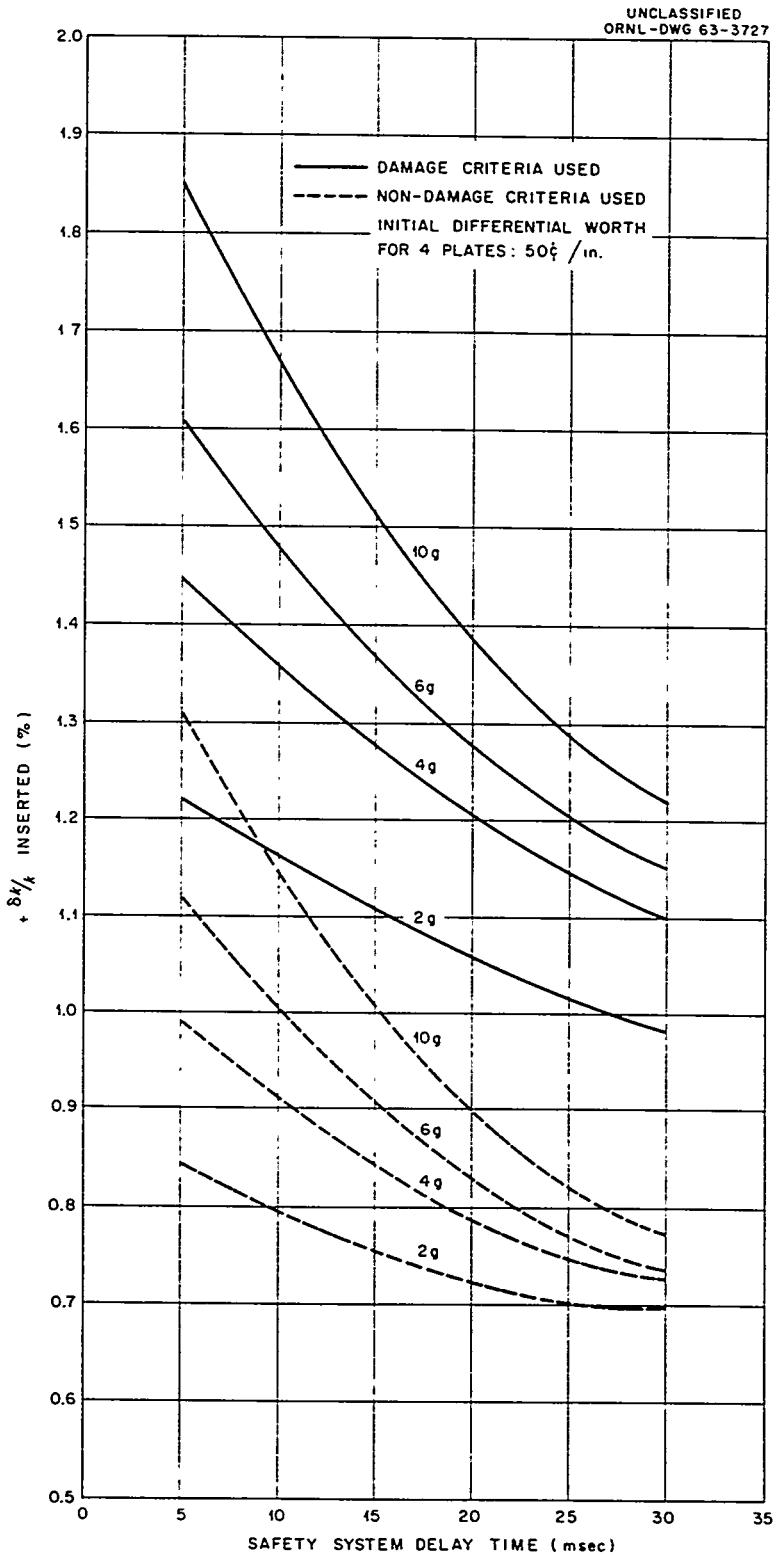

Fig. 8.8.2. Permissible $\Delta k/k$ vs Safety System Delay – One and One-Half Days Before End of Cycle.

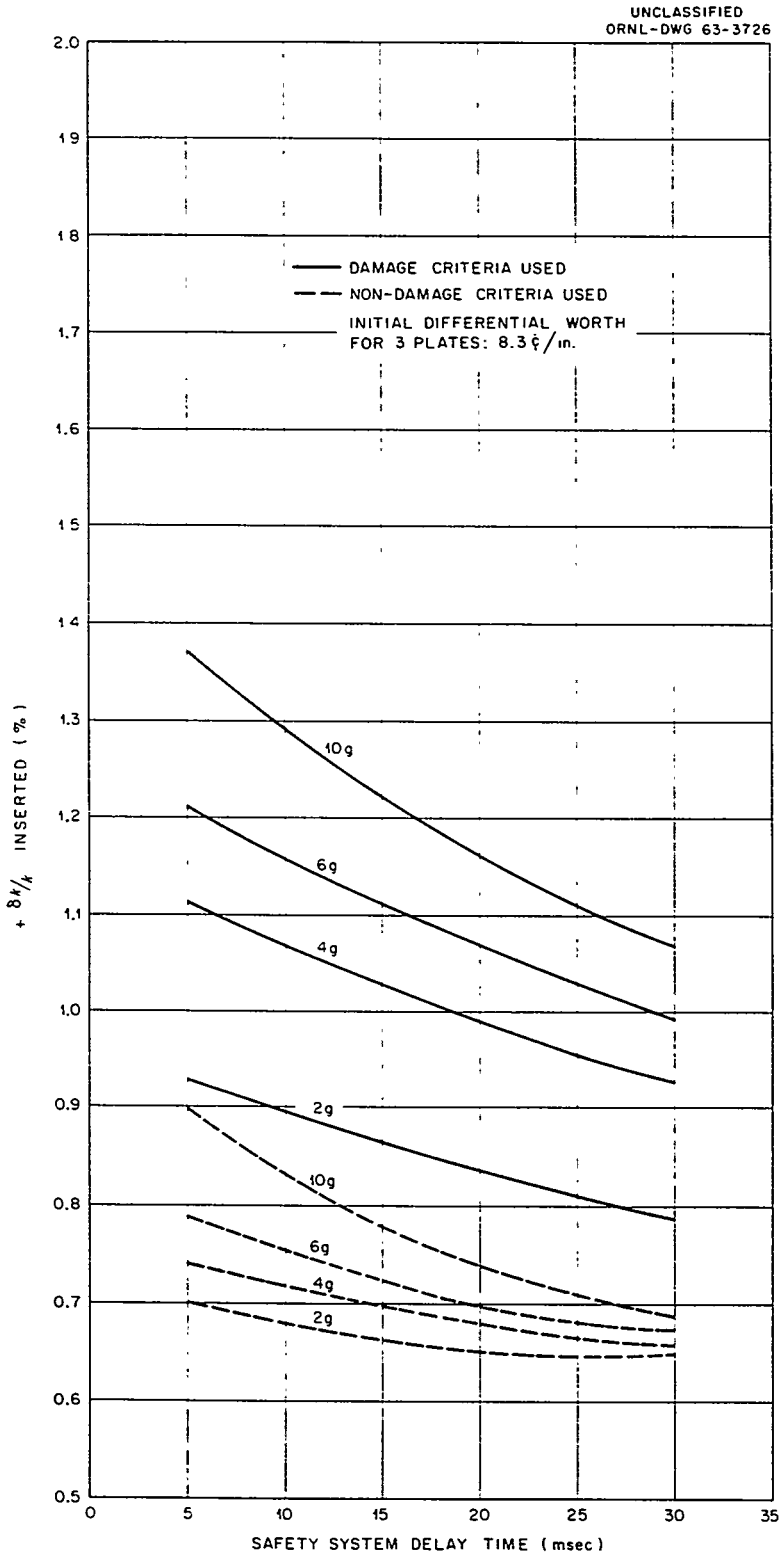

Fig. 8.8.3. Permissible $\Delta k/k$ vs Safety System Delay – End of Cycle.

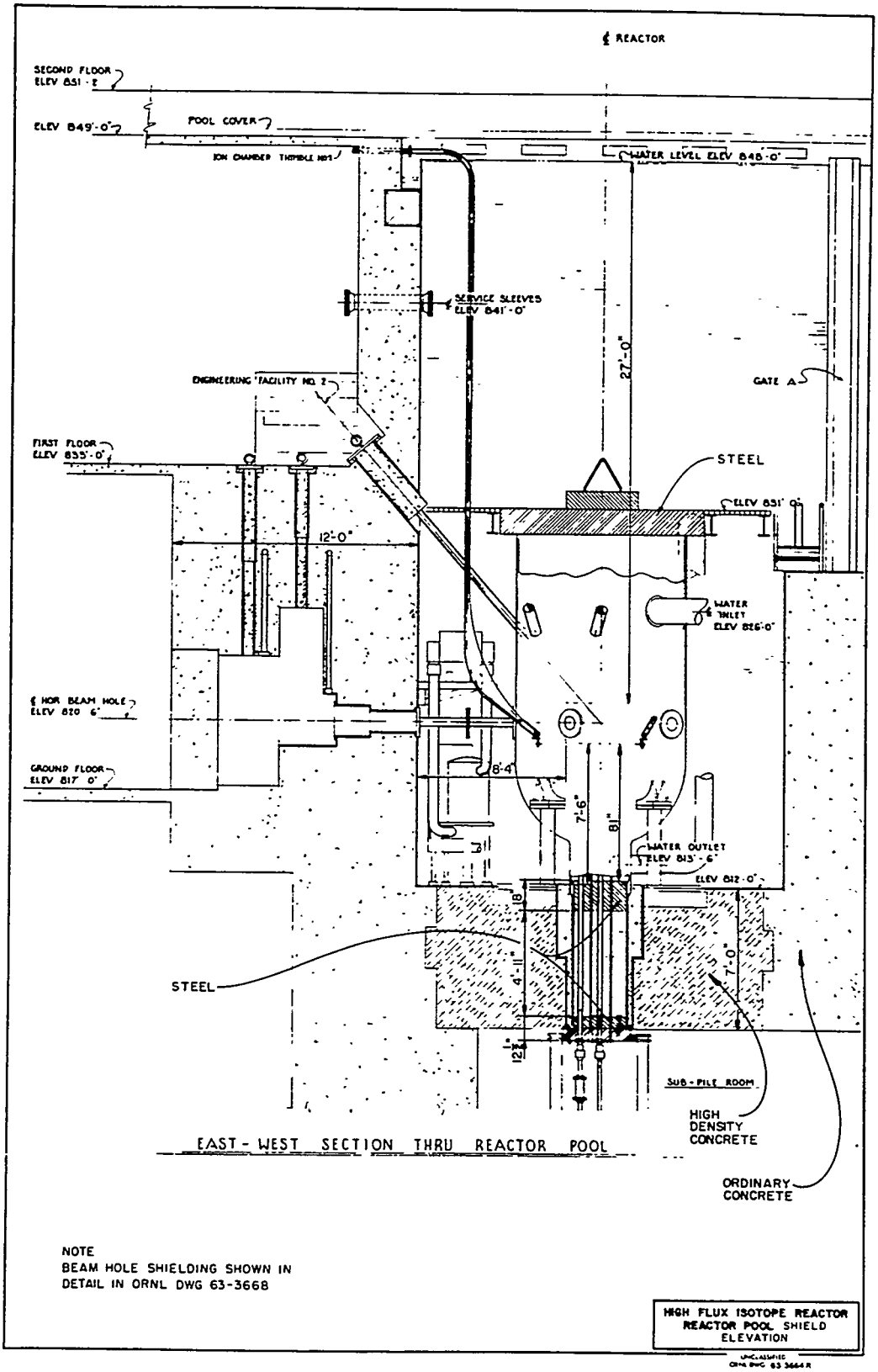

Fig. 9.2.1. Reactor Shield – Elevation.

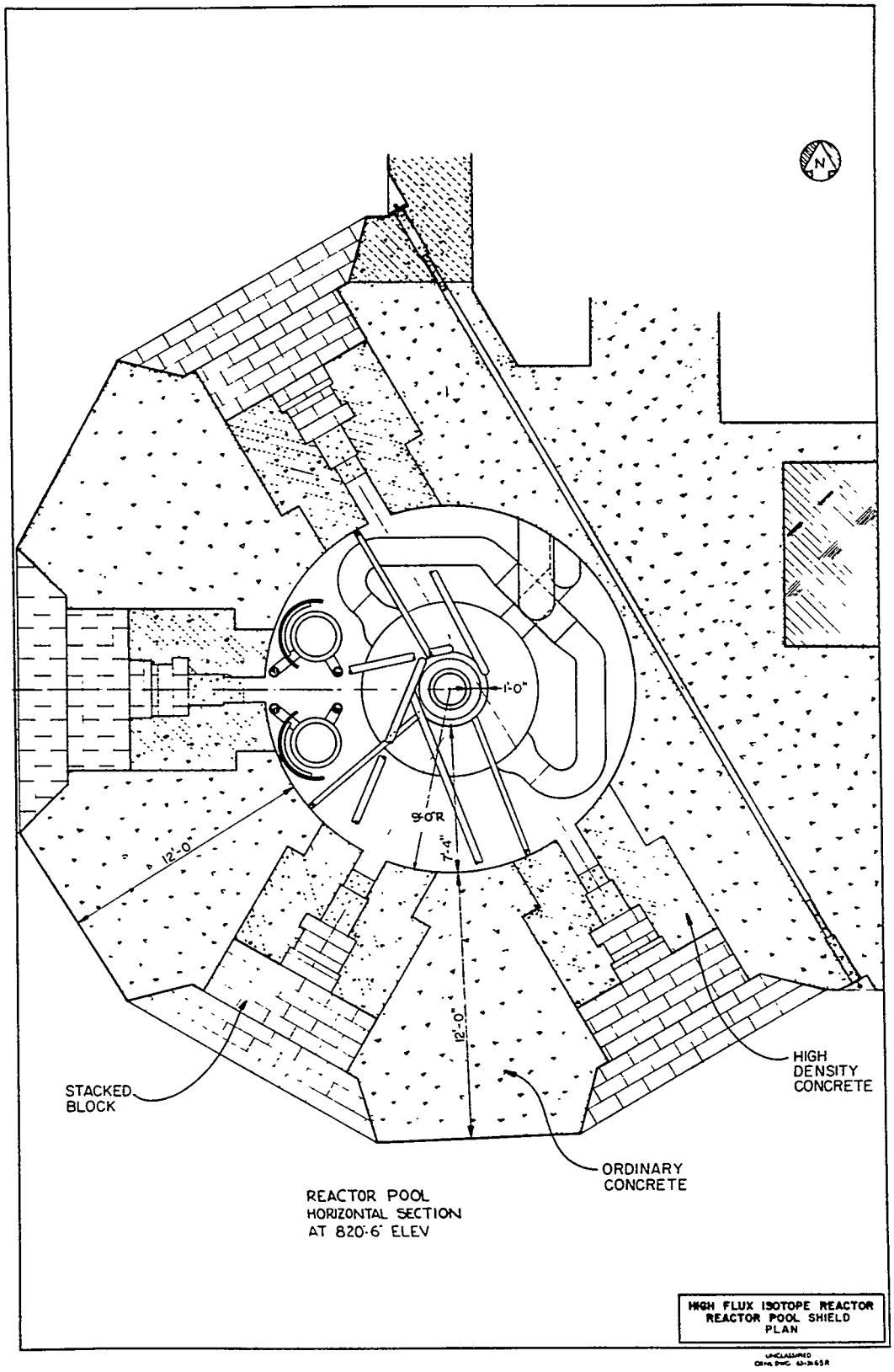

Fig. 9.2.2. Reactor Shield – Plan.

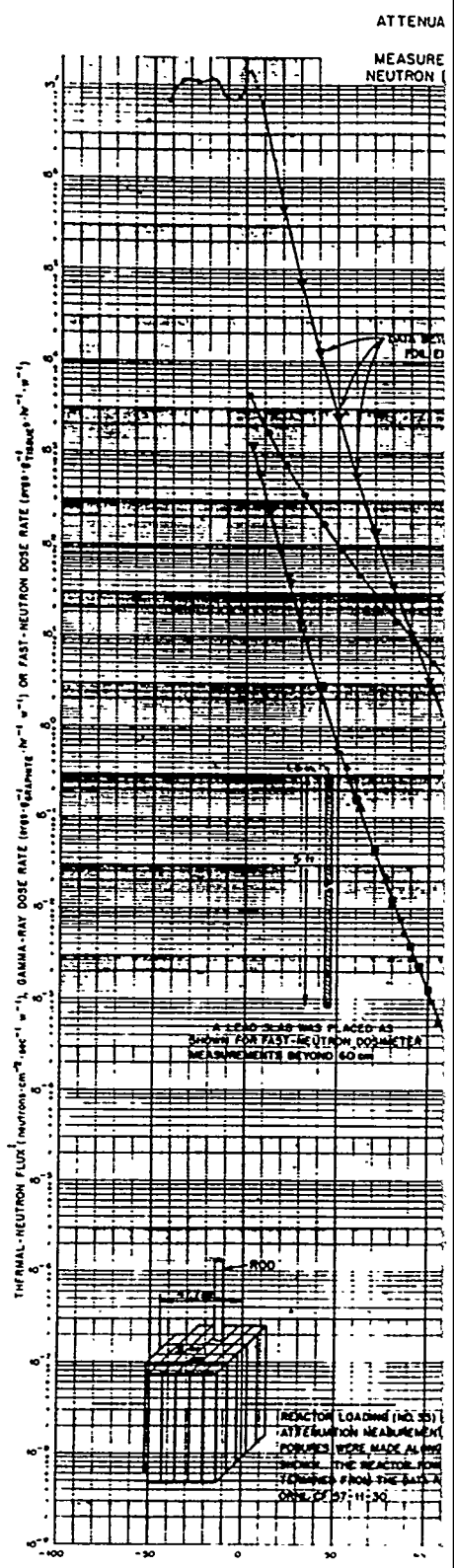

ISSUED AS ORNL-2518

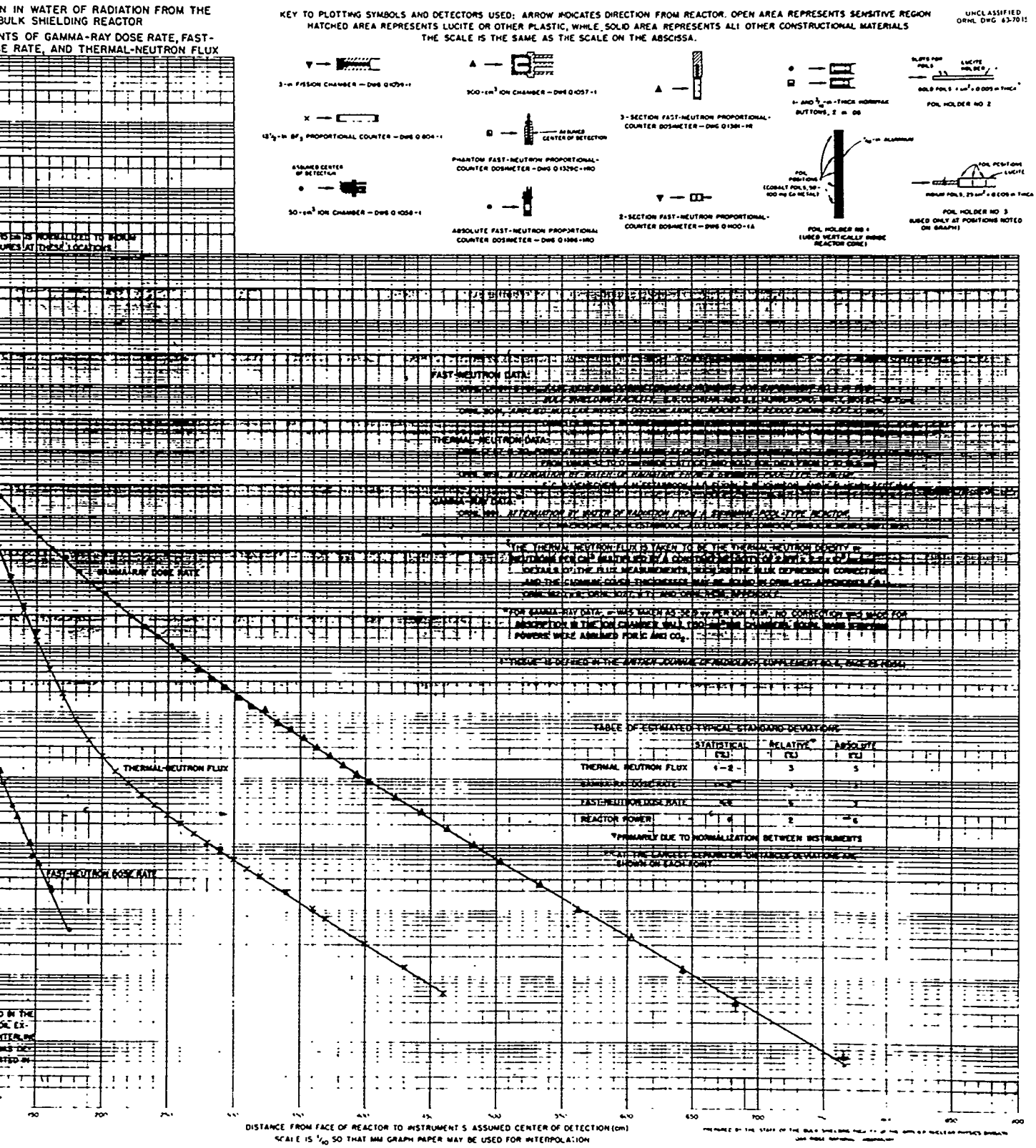

Fig. 9.2.3. Attenuation in Water of Radiation from BSR.

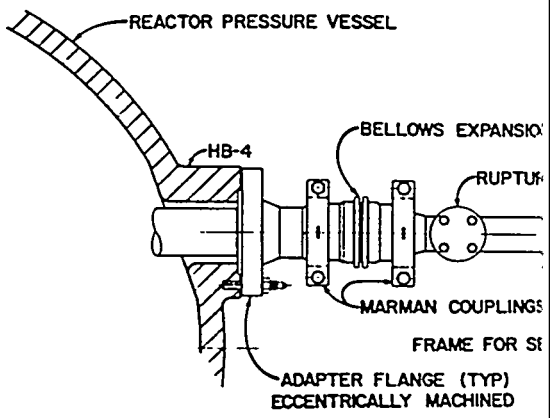
REACTOR PRESSURE VESSEL
HB-4
BELLOWS EXPANSIO
RUPTU
MARMAN COUPLINGS
FRAME FOR S
ADAPTER FLANGE (TYP)
ECCENTRICALLY MACHINED

REACTOR PC

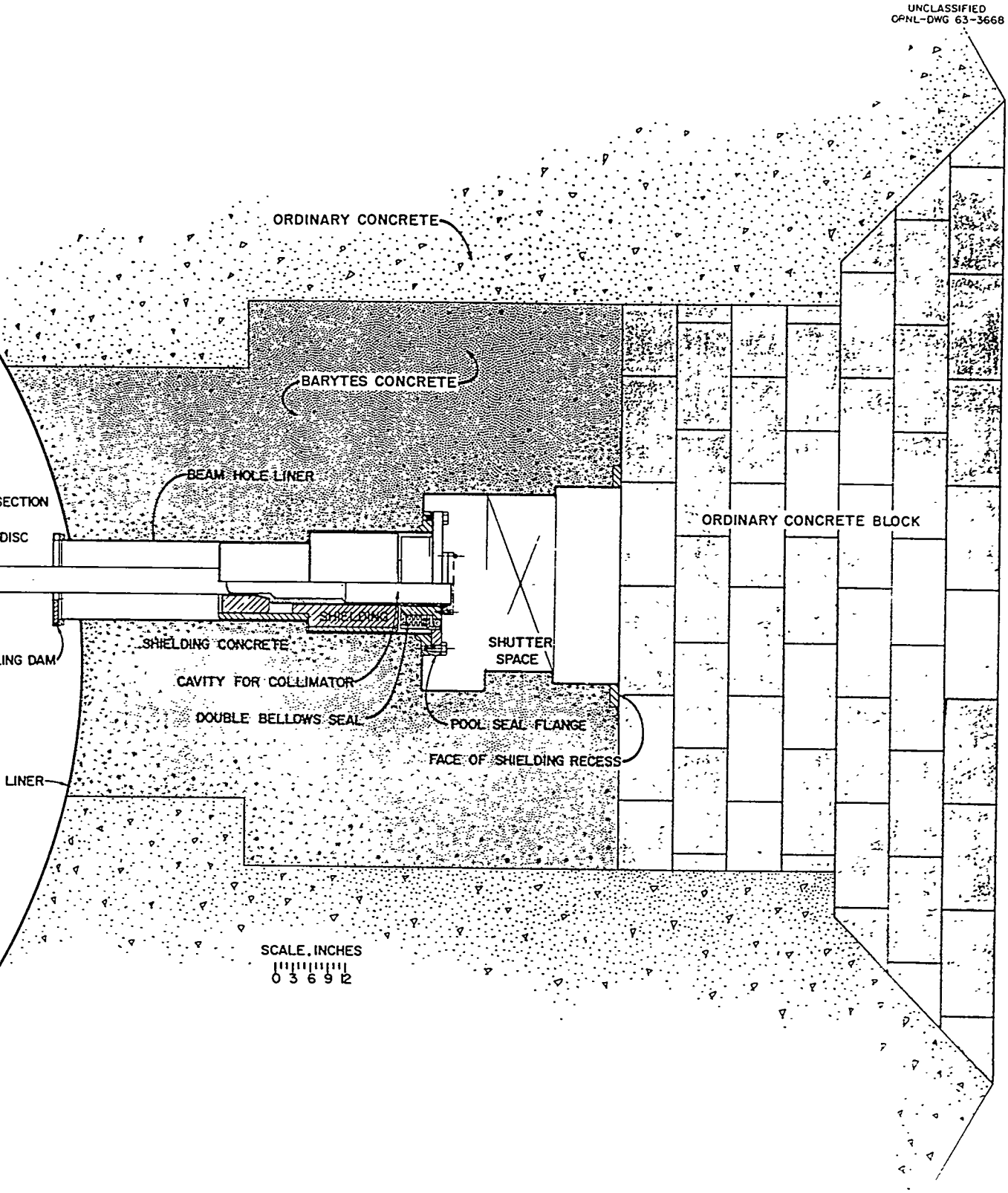

Fig. 9.3.1. Beam Hole Shielding.

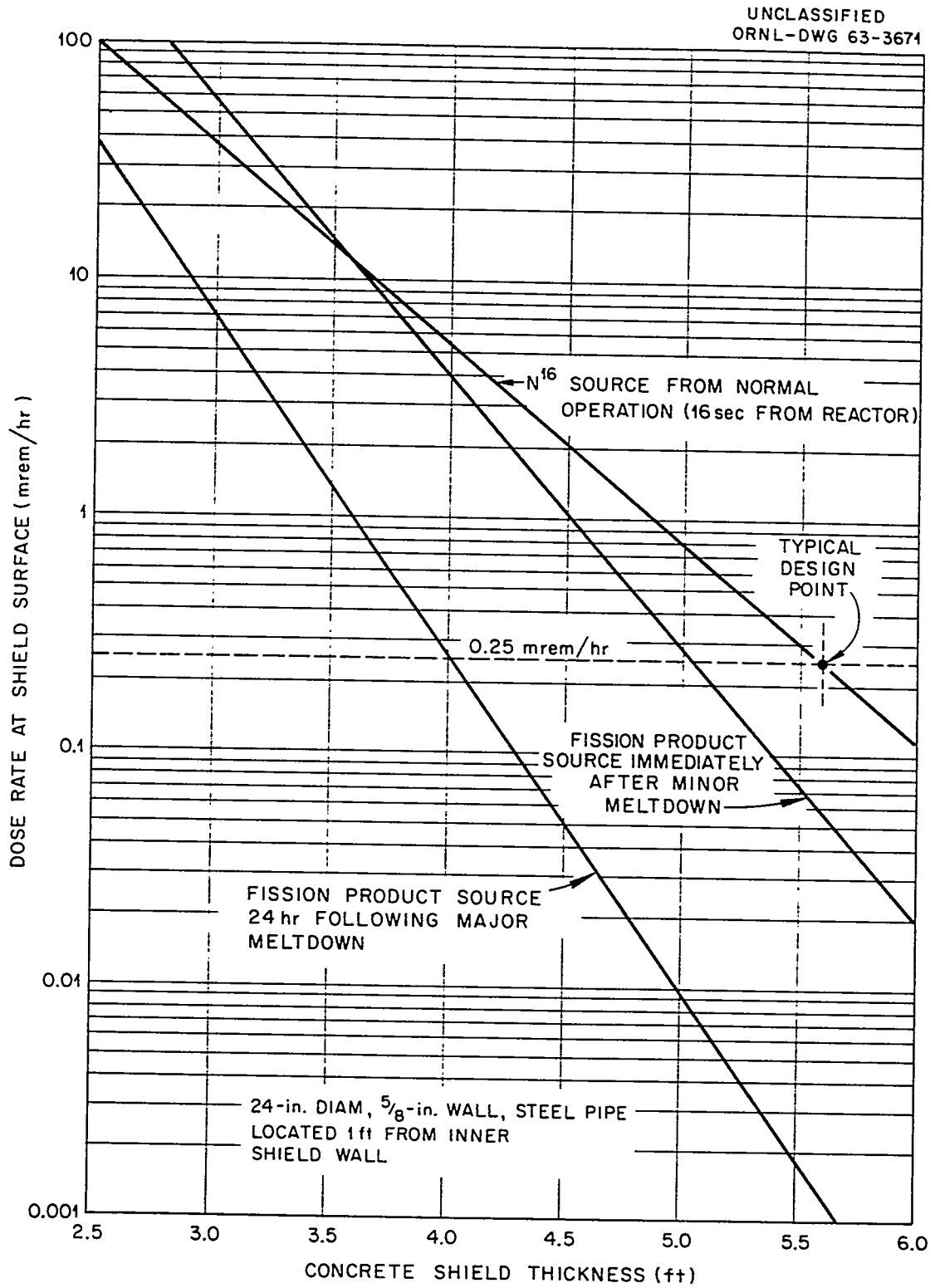

Fig. 9.4.1. Dose Rate at Outer Shield Surface.

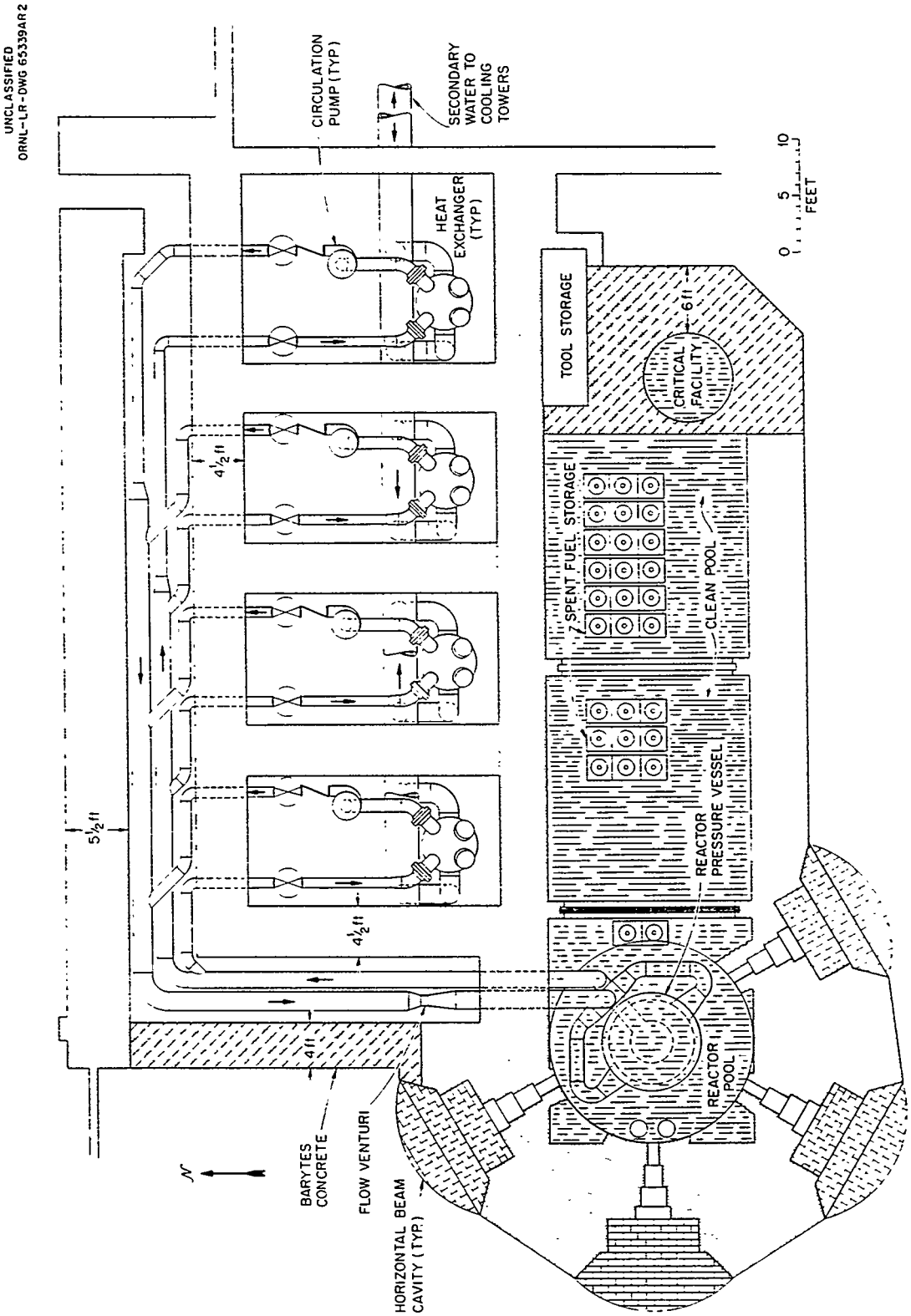

Fig. 9.4.2. Primary Loop Shielding.

UNCLASSIFIED
ORNL-DWG 63-3666

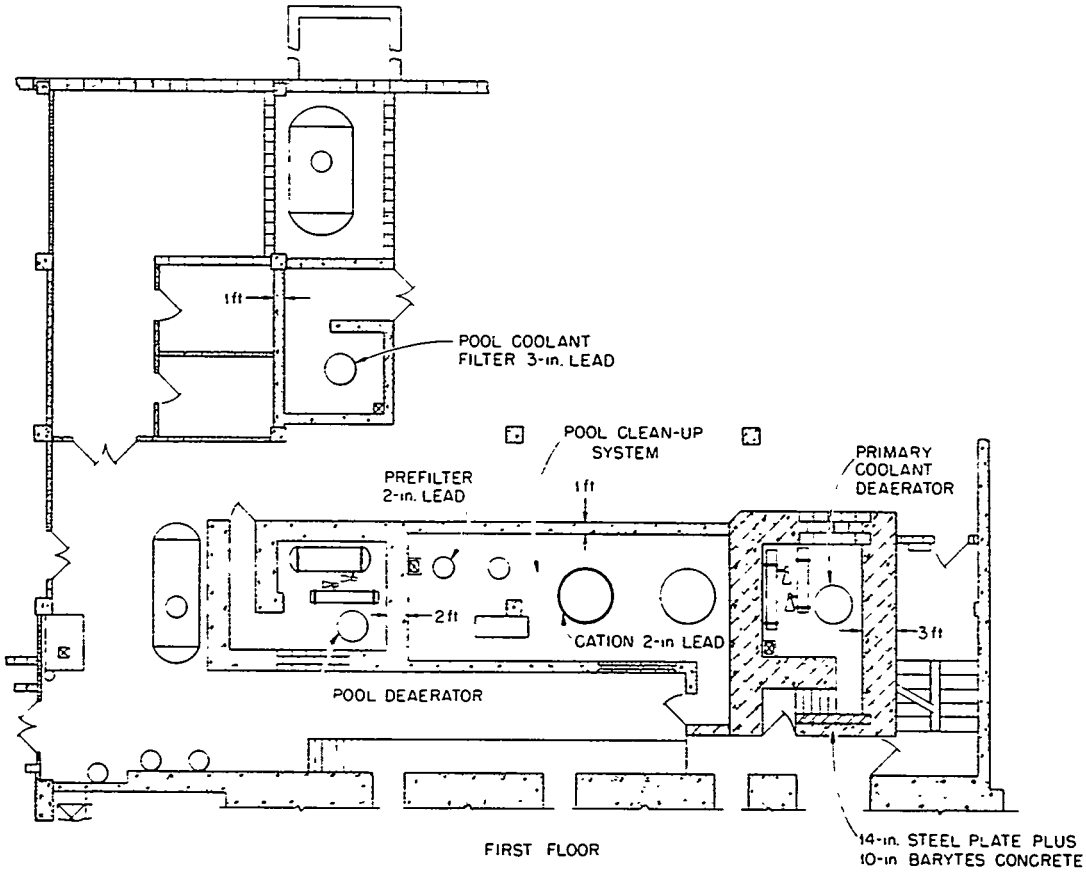

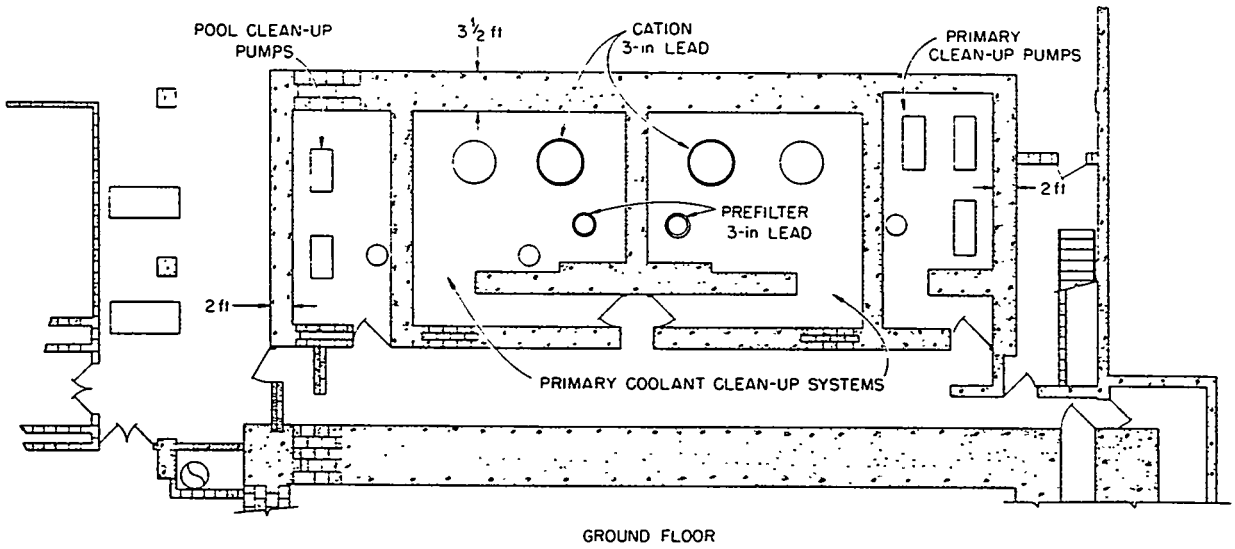

Fig. 9.4.3. Pool and Primary Coolant Cleanup Cells – Plan View.

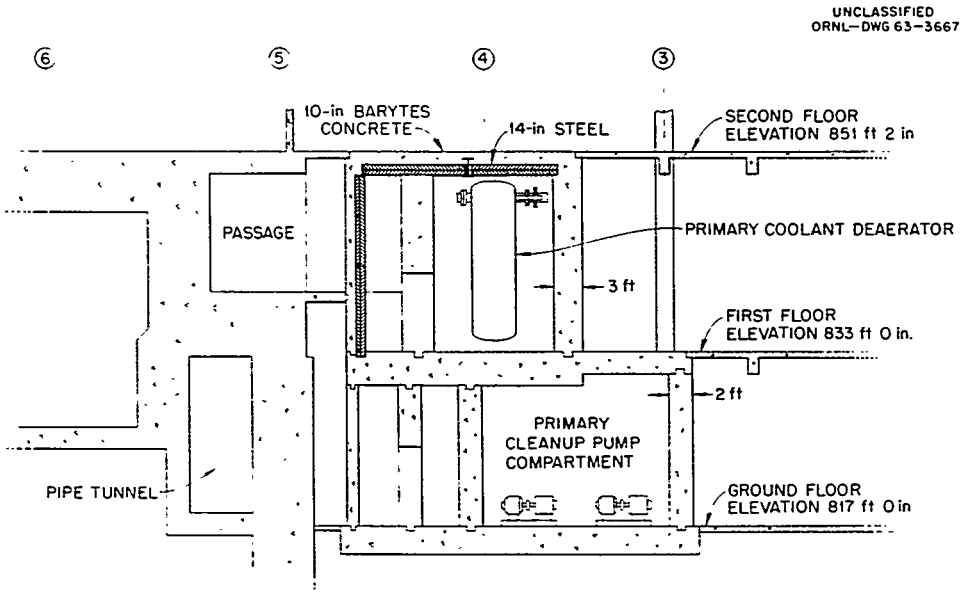

SECTION C-C (DWG 63-3647)

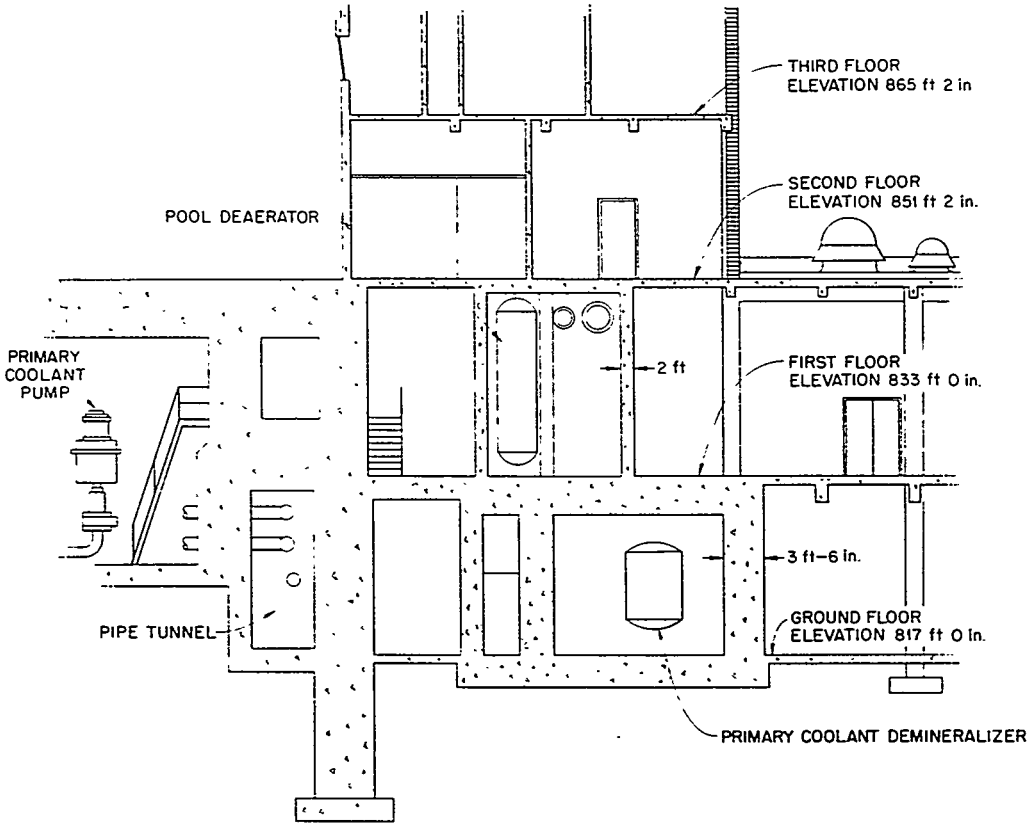

SECTION B-B (DWG 63-3652)

Fig. 9.4.4. Pool and Primary Coolant Cleanup Cells – Elevation.

UNCLASSIFIED
ORNL-LR-DWG 57196A

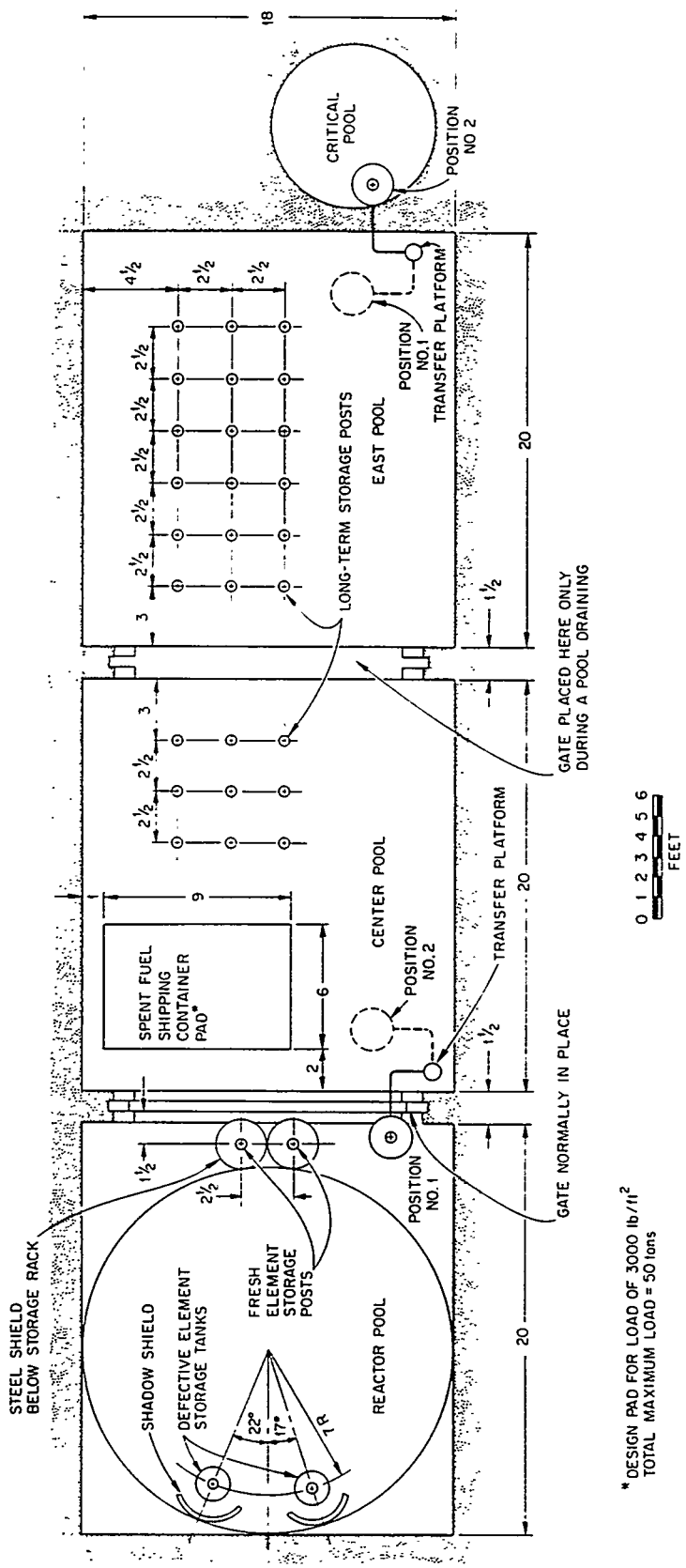

Fig. 9.6.1. Fuel Element In-Pool Storage.

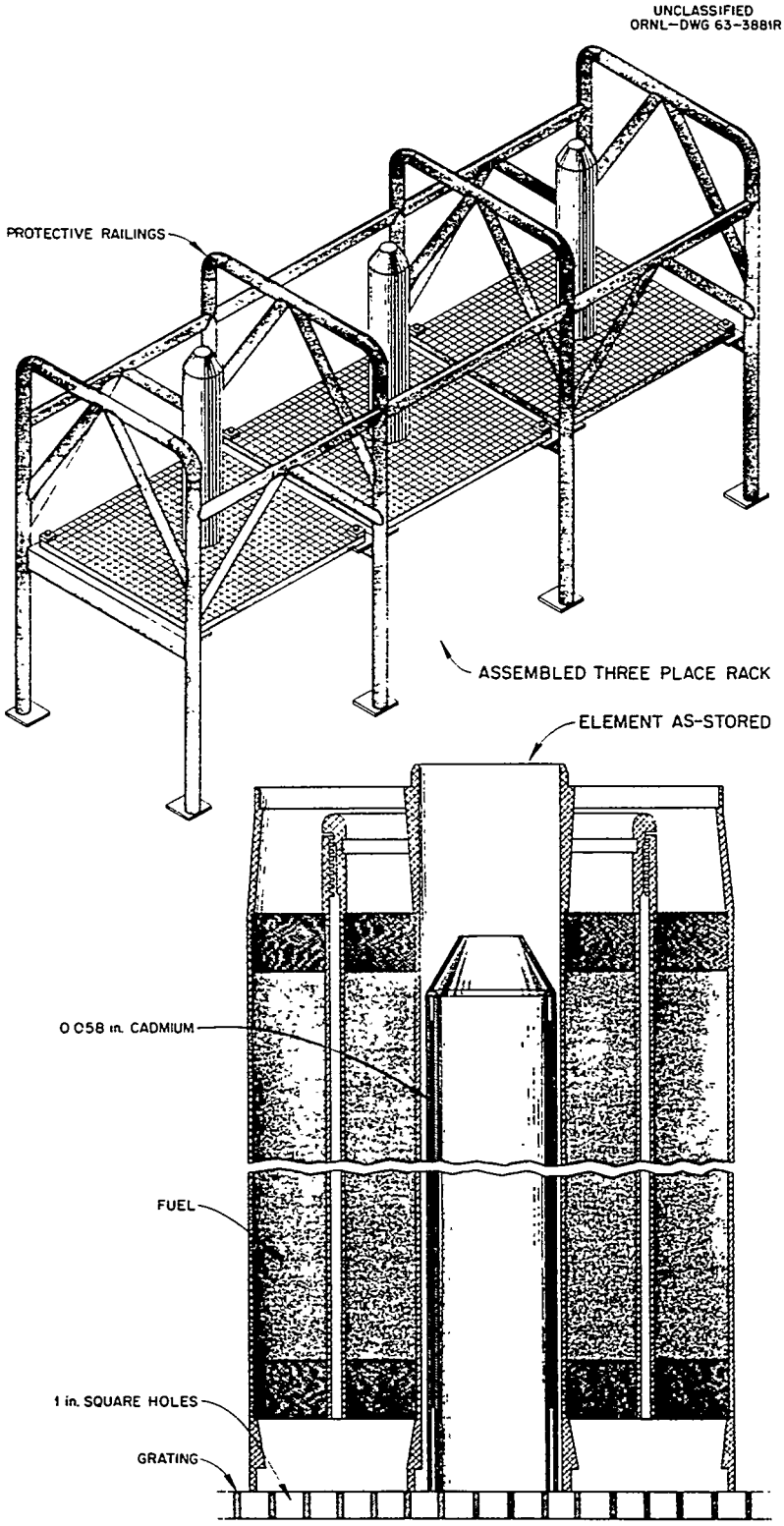

Fig. 9.6.2. In-Pool Fuel Storage Rack.

UNCLASSIFIED
ORNL-LR-DWG 57197A

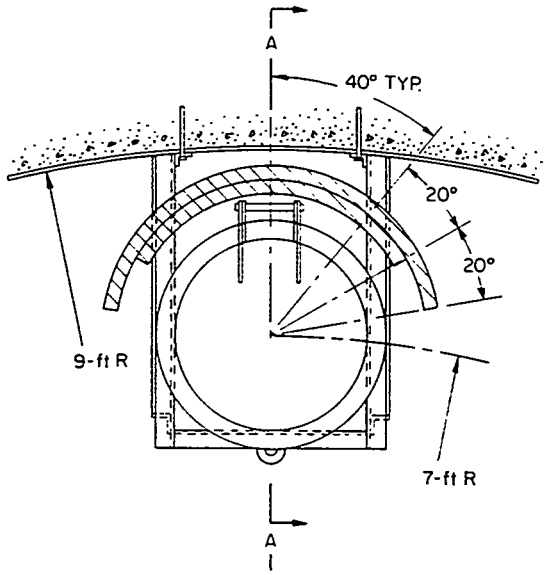

PLAN VIEW

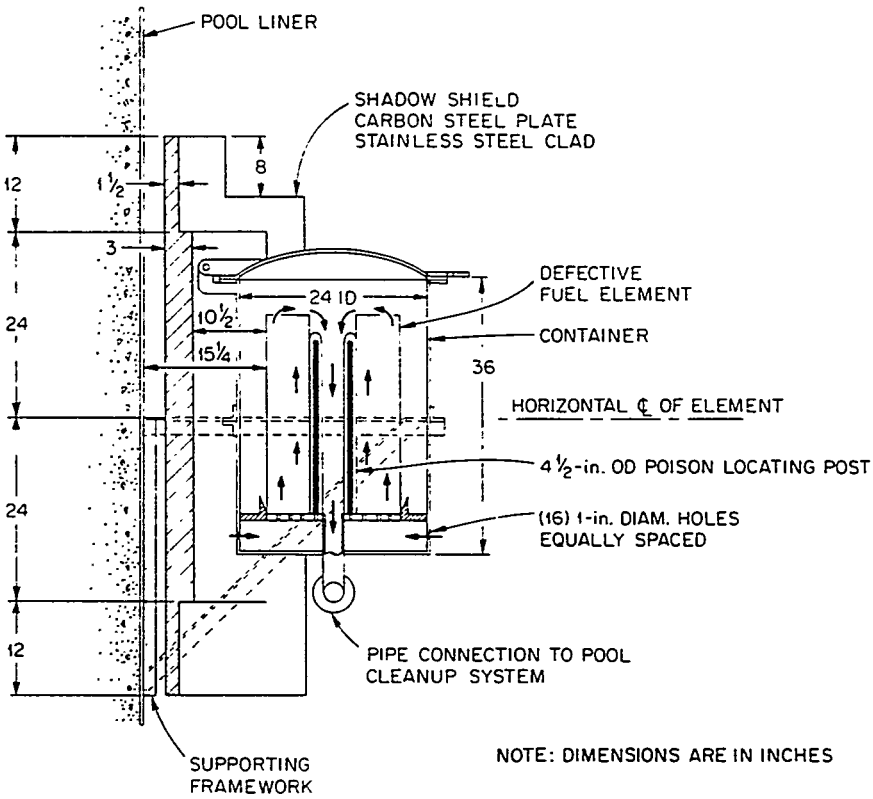

SECTION A-A

Fig. 9.6.3. Defective Element Storage Tank Details.

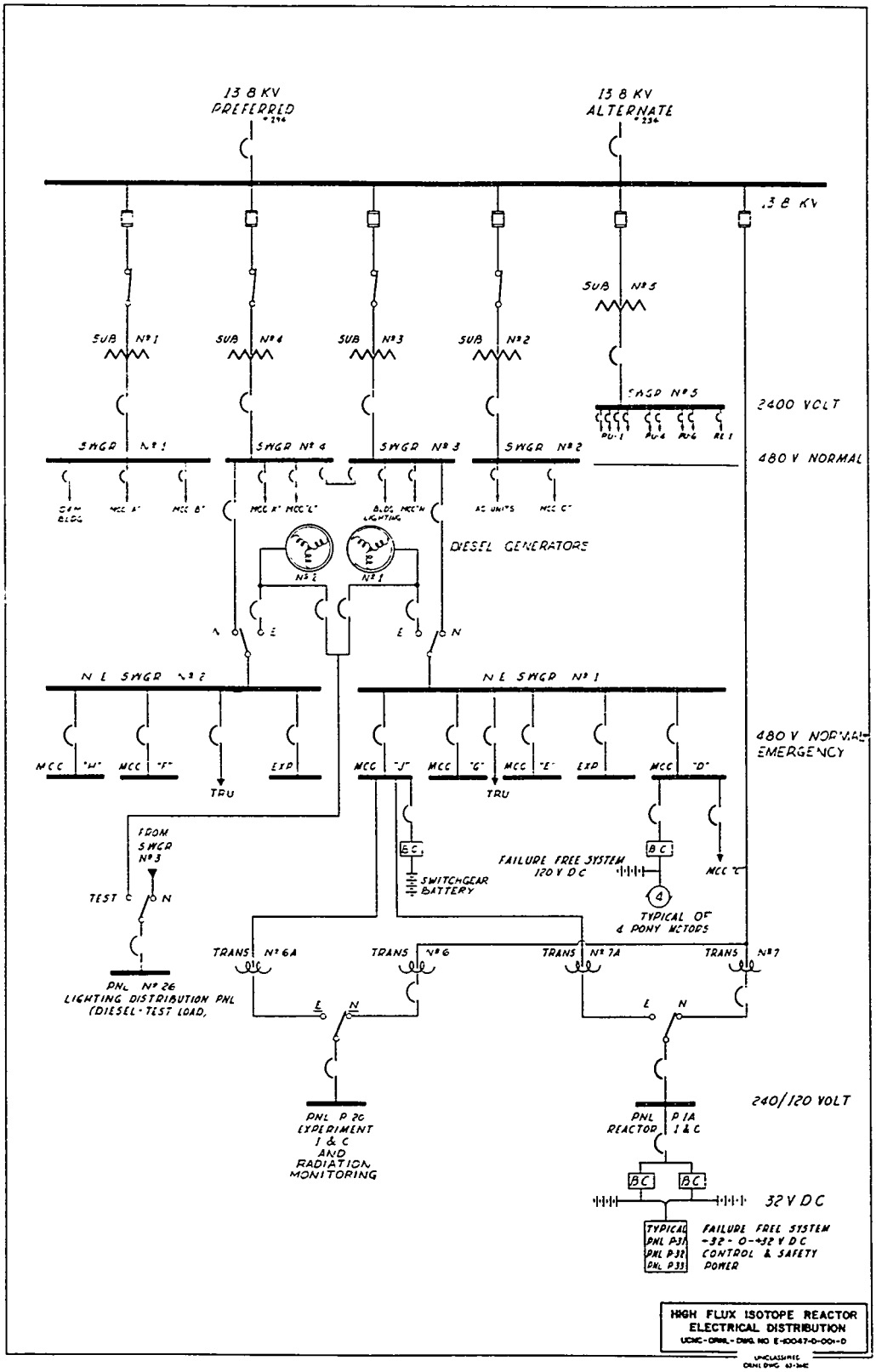

Fig. 10.1.1. Electrical Distribution.

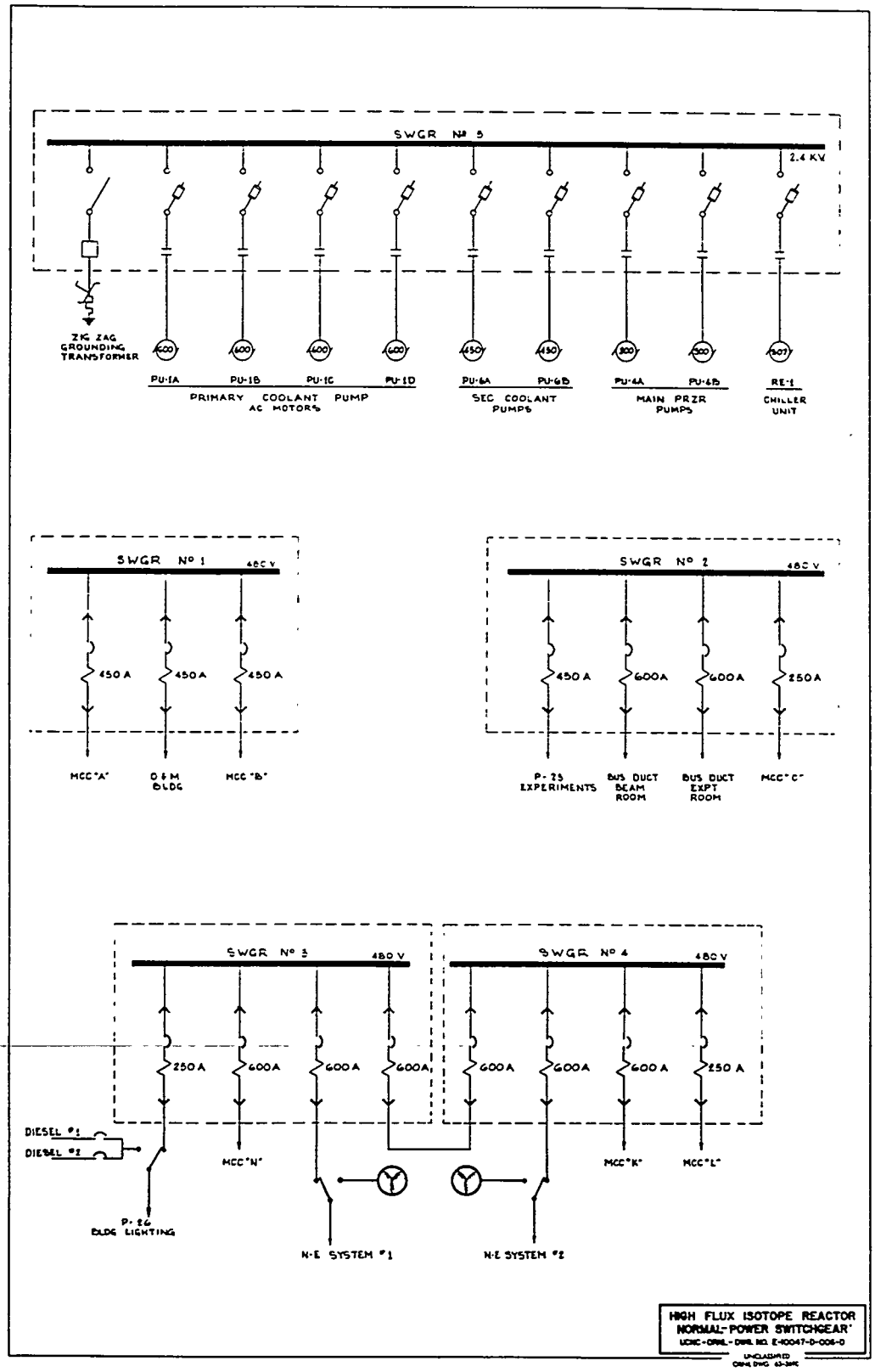

Fig. 10.1.2. Normal-Power Switchgear.

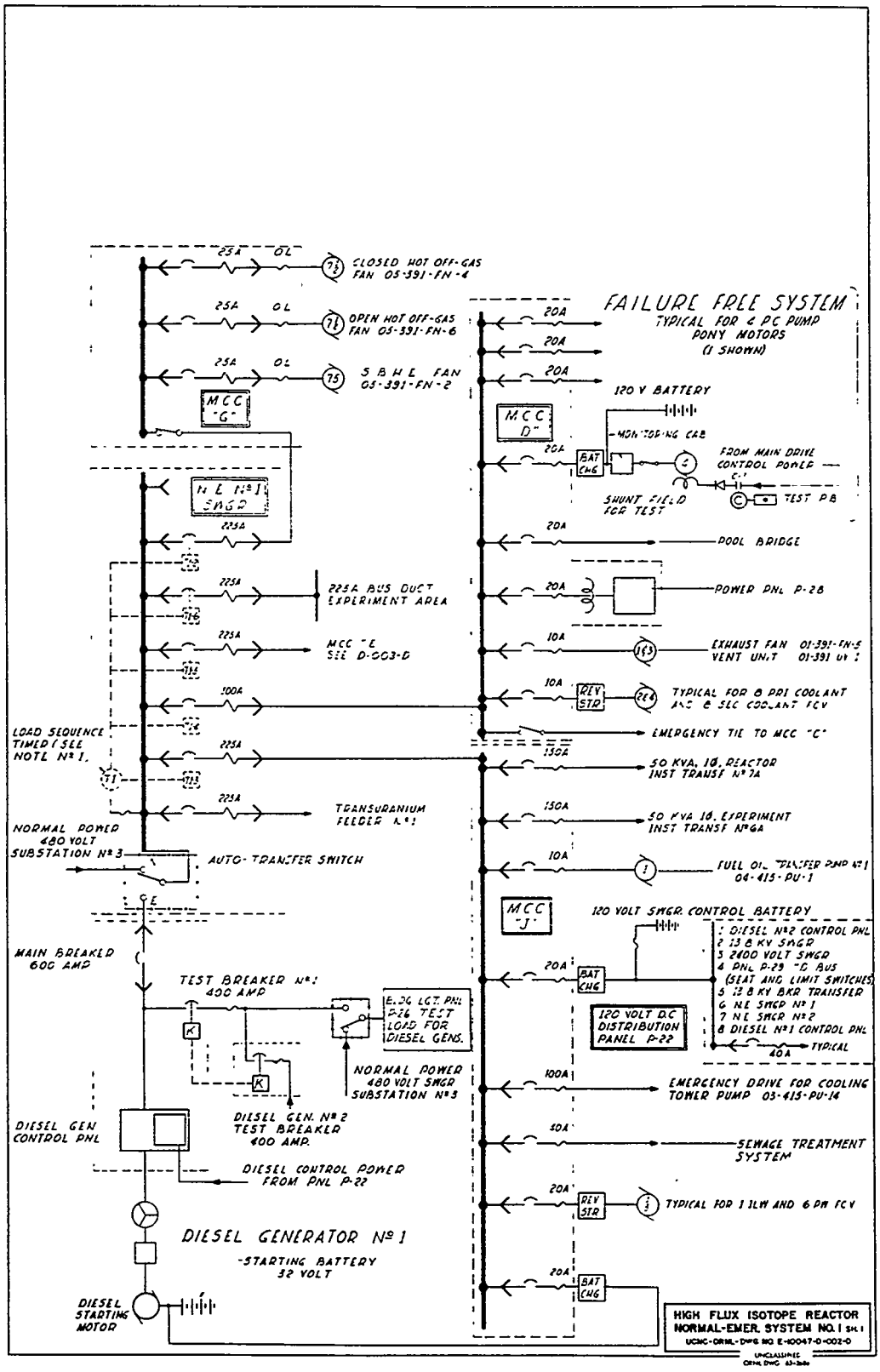

Fig. 10.1.3(a). Normal-Emergency System No. 1, Sheet 1.

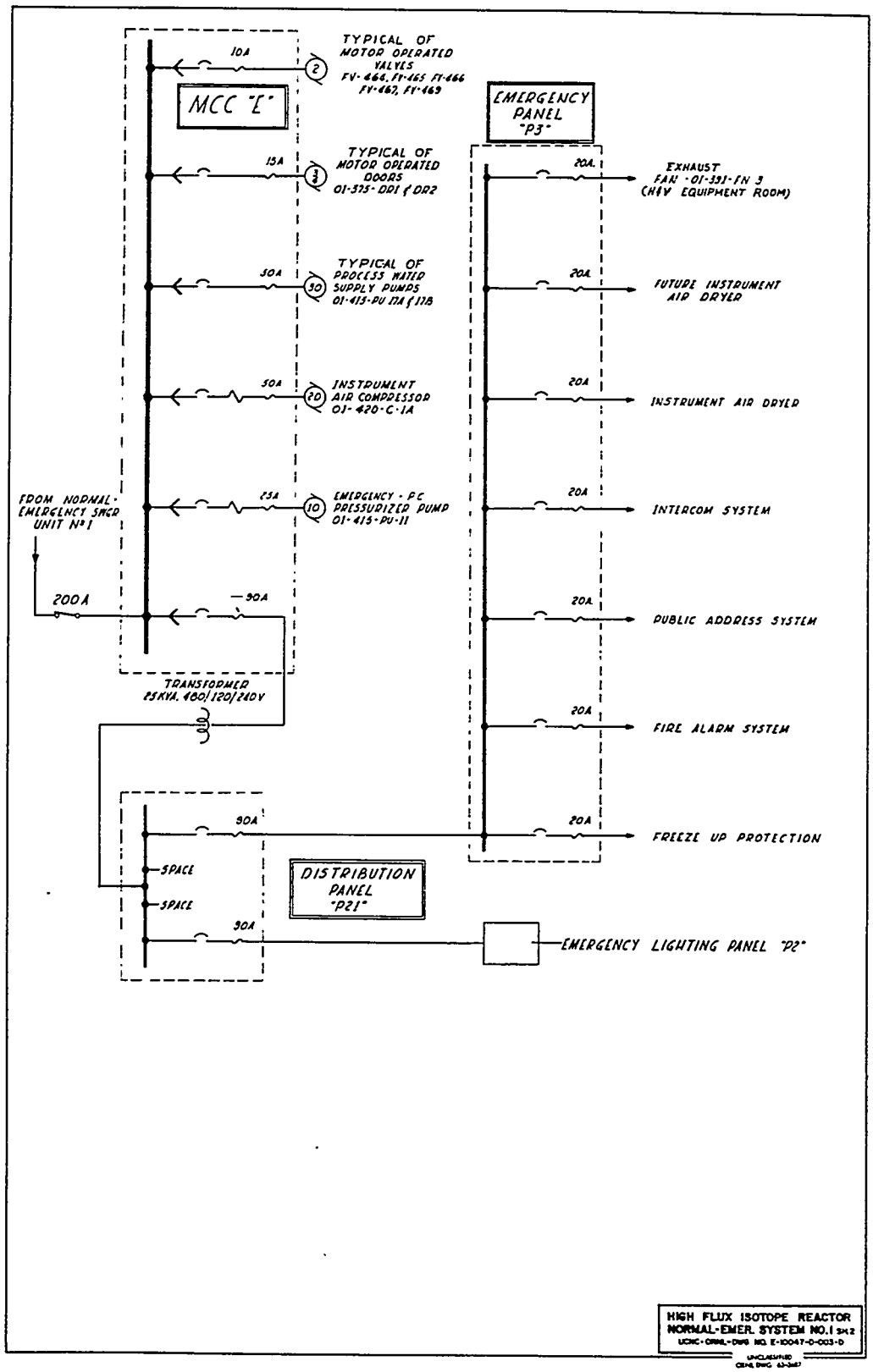

Fig. 10.1.3(*b*). Normal-Emergency System No. 1, Sheet 2.

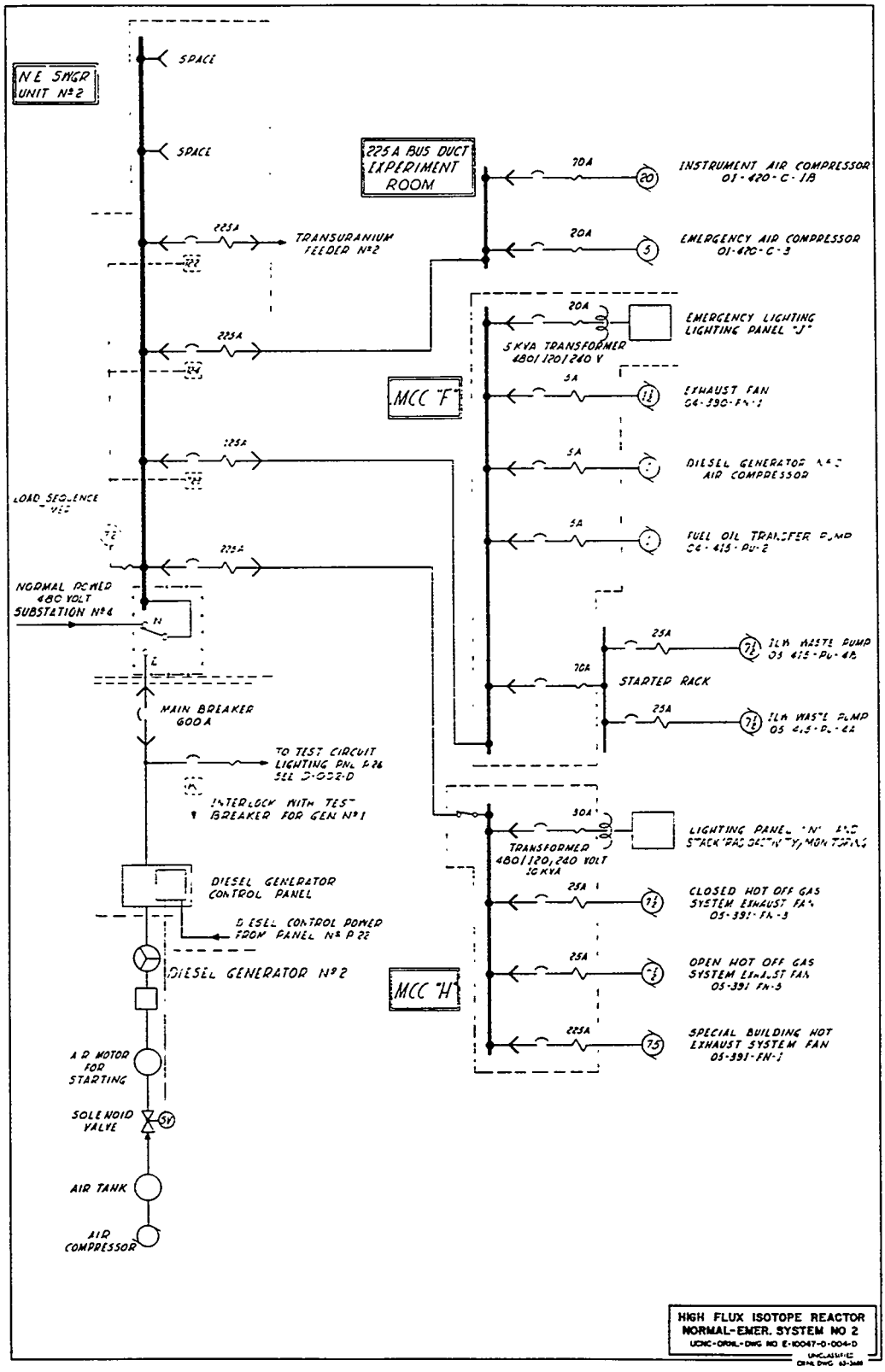

Fig. 10.1.4. Normal-Emergency System No. 2.

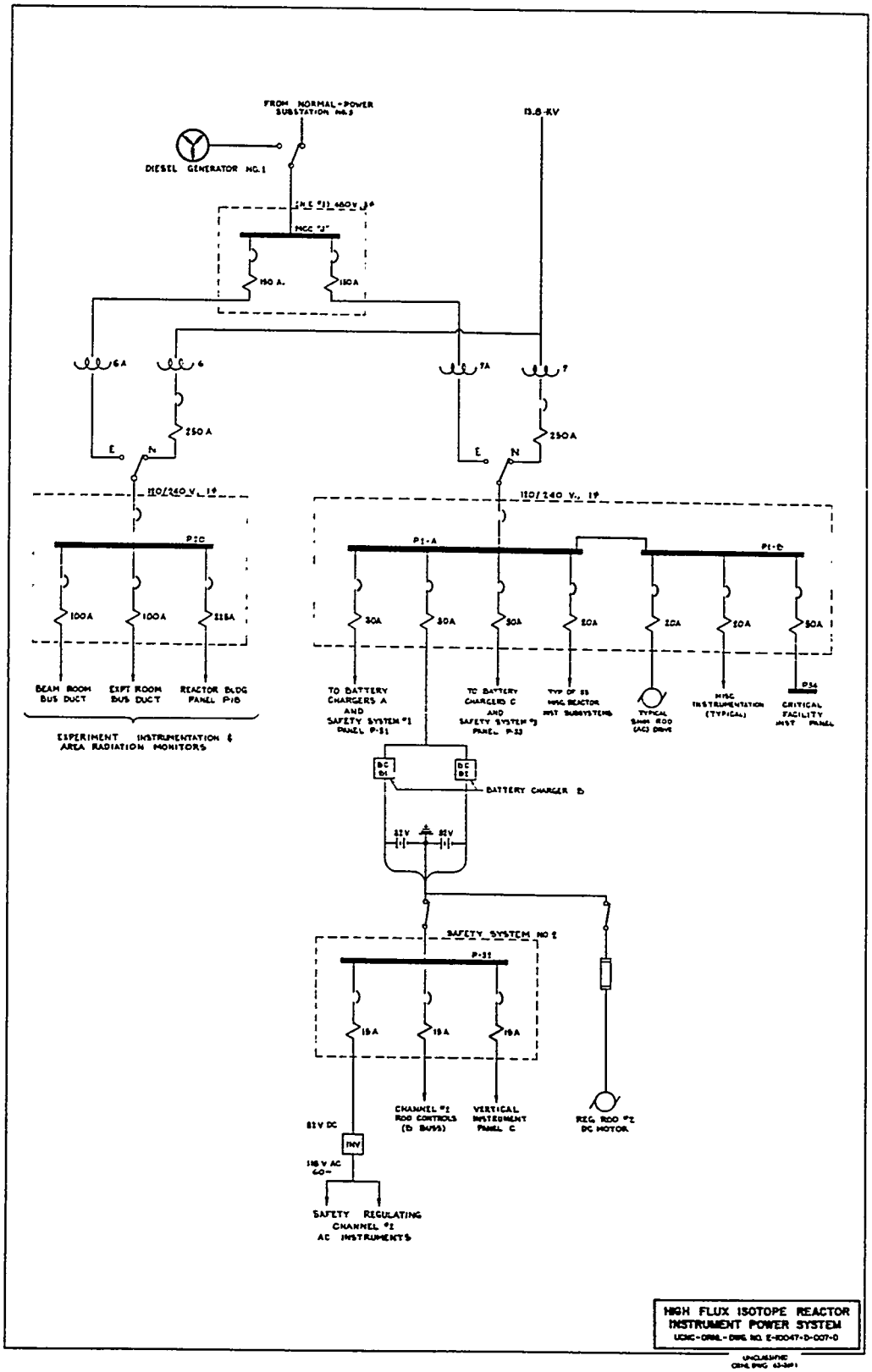

Fig. 10.1.5. Instrument Power System.

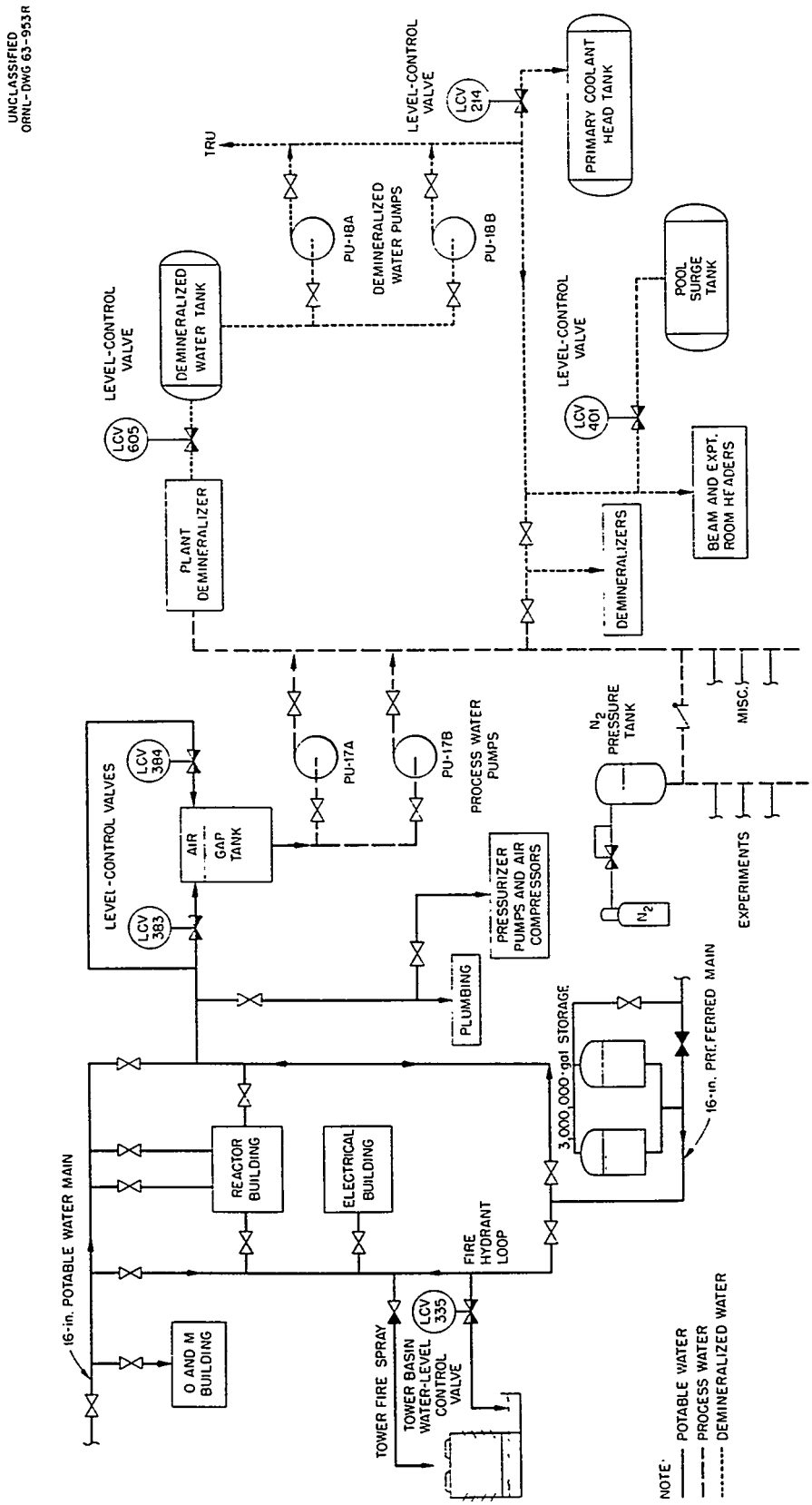

Fig. 10.2.1. Plant Water Supply System.

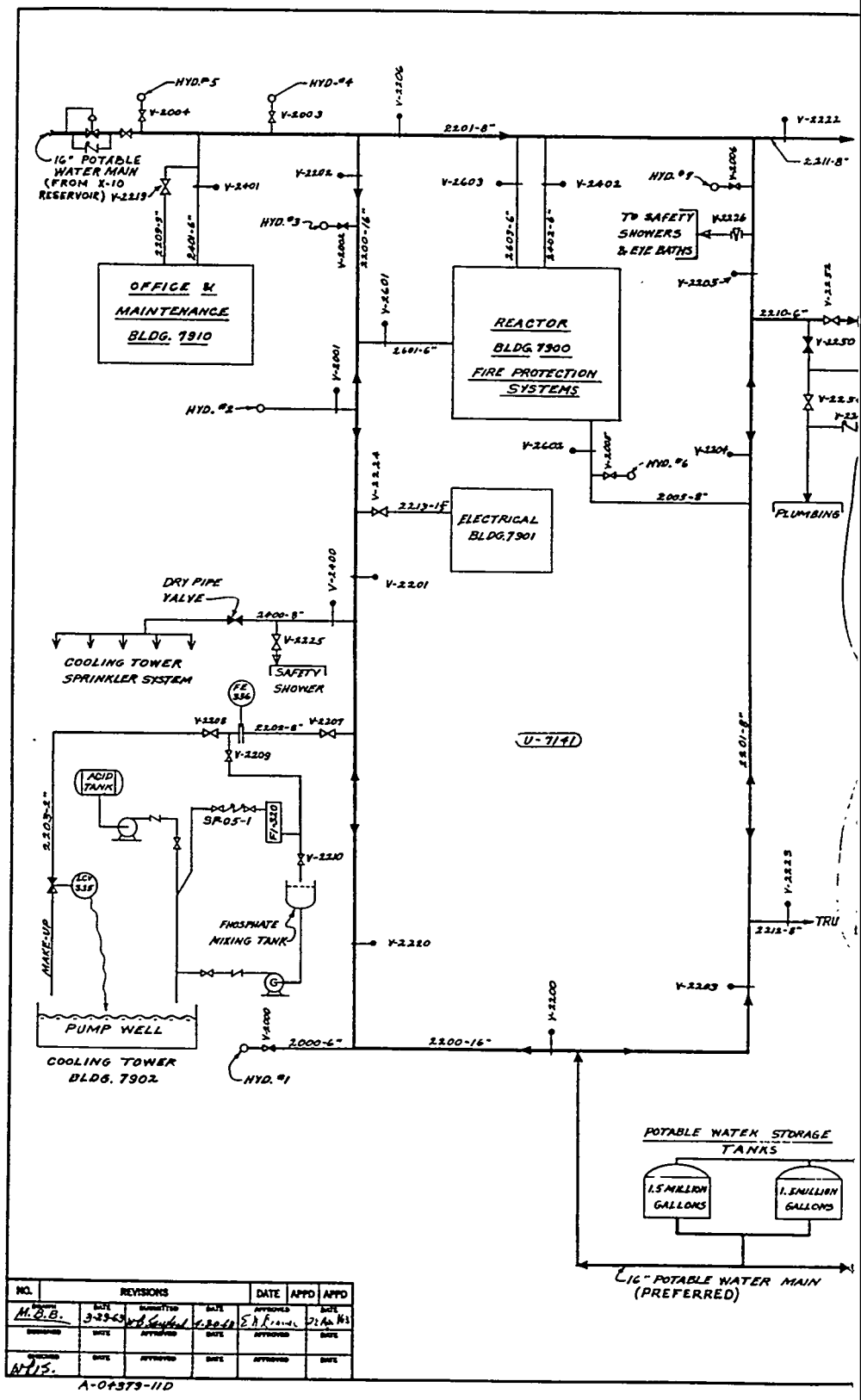
HYD. #5
HYD. #4
V-2004
V-2003
V-2206
2201-8"
V-2222
2211-8"
16" POTABLE WATER MAIN (FROM X-10 RESERVOIR) V-2213
V-2401
V-2202
V-2603
V-2402
HYD. #7
V-2006
HYD. #3
2109-3"
2401-6"
2100-16"
2603-6"
2402-8"
TO SAFETY SHOWERS & EYE BATHS
V-2226
OFFICE & MAINTENANCE BLDG. 7910
V-2601
REACTOR BLDG. 7900 FIRE PROTECTION SYSTEMS
V-2205
2210-6"
V-2250
2601-6"
V-2001
HYD. #2
V-2602
V-2204
HYD. #6
V-2224
2213-1F
ELECTRICAL BLDG. 7901
2005-8"
PLUMBING
V-2400
V-2201
DRY PIPE VALVE
2400-8"
V-2225
COOLING TOWER SPRINKLER SYSTEM
SAFETY SHOWER
FE 336
V-2208
2202-8"
V-2207
V-2209
U-7141
2201-8"
ACID TANK
SR05-1
F/320
V-2210
2203-2"
LCV 338
MAKE-UP
PHOSPHATE MIXING TANK
V-2220
V-2223
TRU
2212-8"
V-2203
V-2200
V-4000
2000-6"
2200-16"
PUMP WELL
COOLING TOWER BLDG. 7902
HYD. #1
POTABLE WATER STORAGE TANKS
1.5 MILLION GALLONS
1. MILLION GALLONS
16" POTABLE WATER MAIN (PREFERRED)
NO.
REVISIONS
DATE
APPD
APPD
H.B.B.
3-29-63
1-30-68
A-04379-11D

Fig.

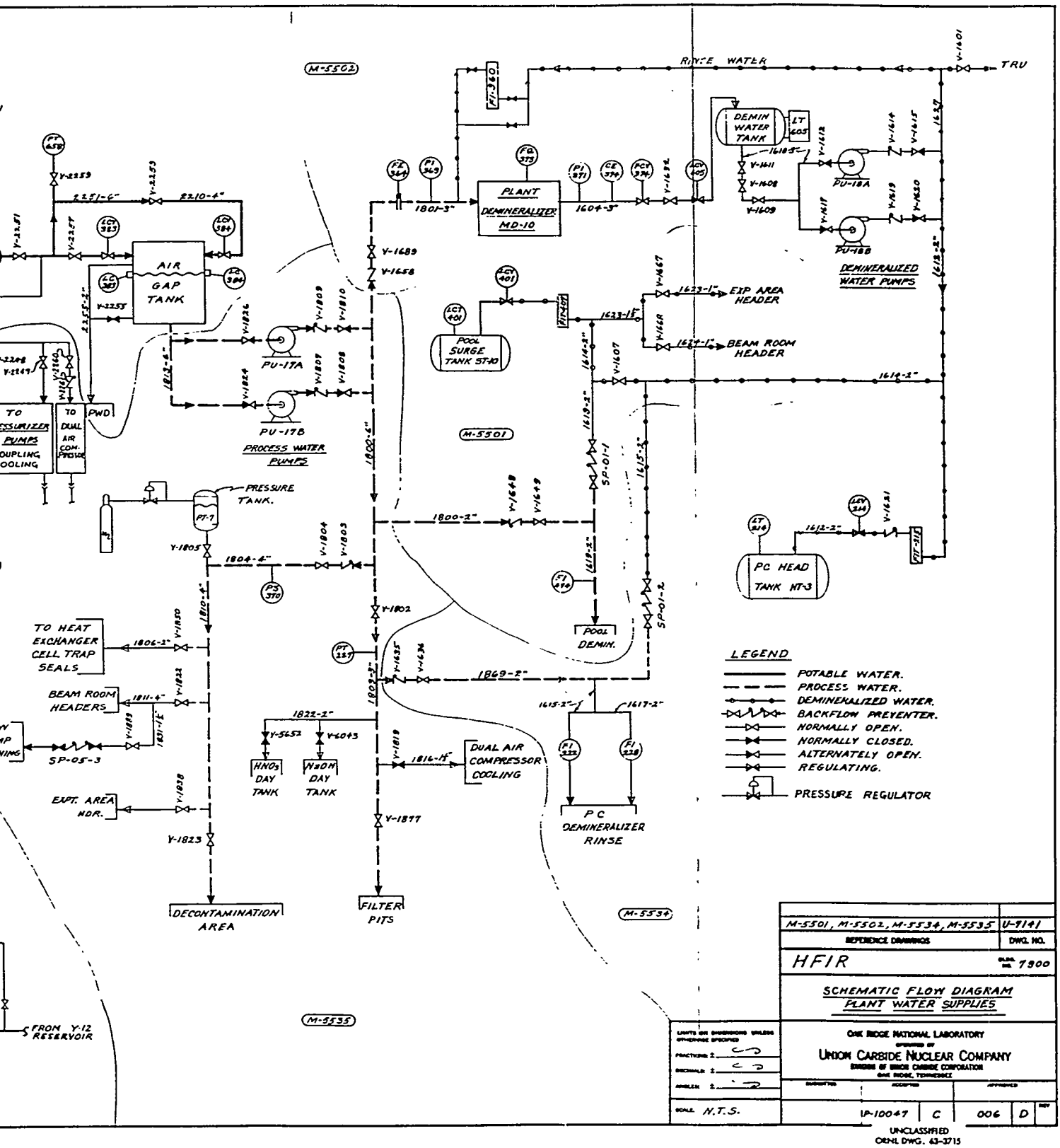

0.2.2. Plant Water Supply — Schematic Flow Diagram.

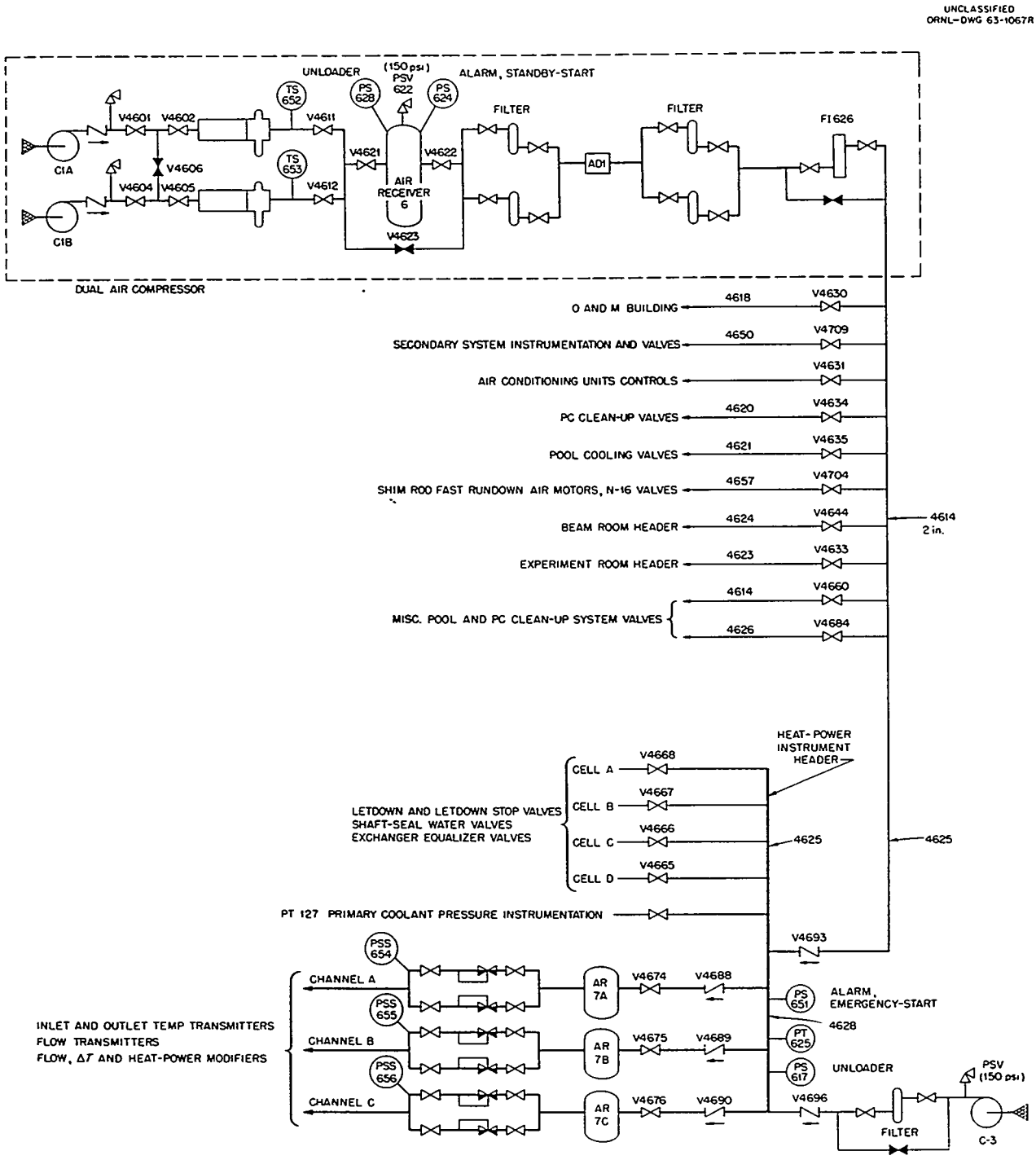

Fig. 10.3.1. Instrument Air System.

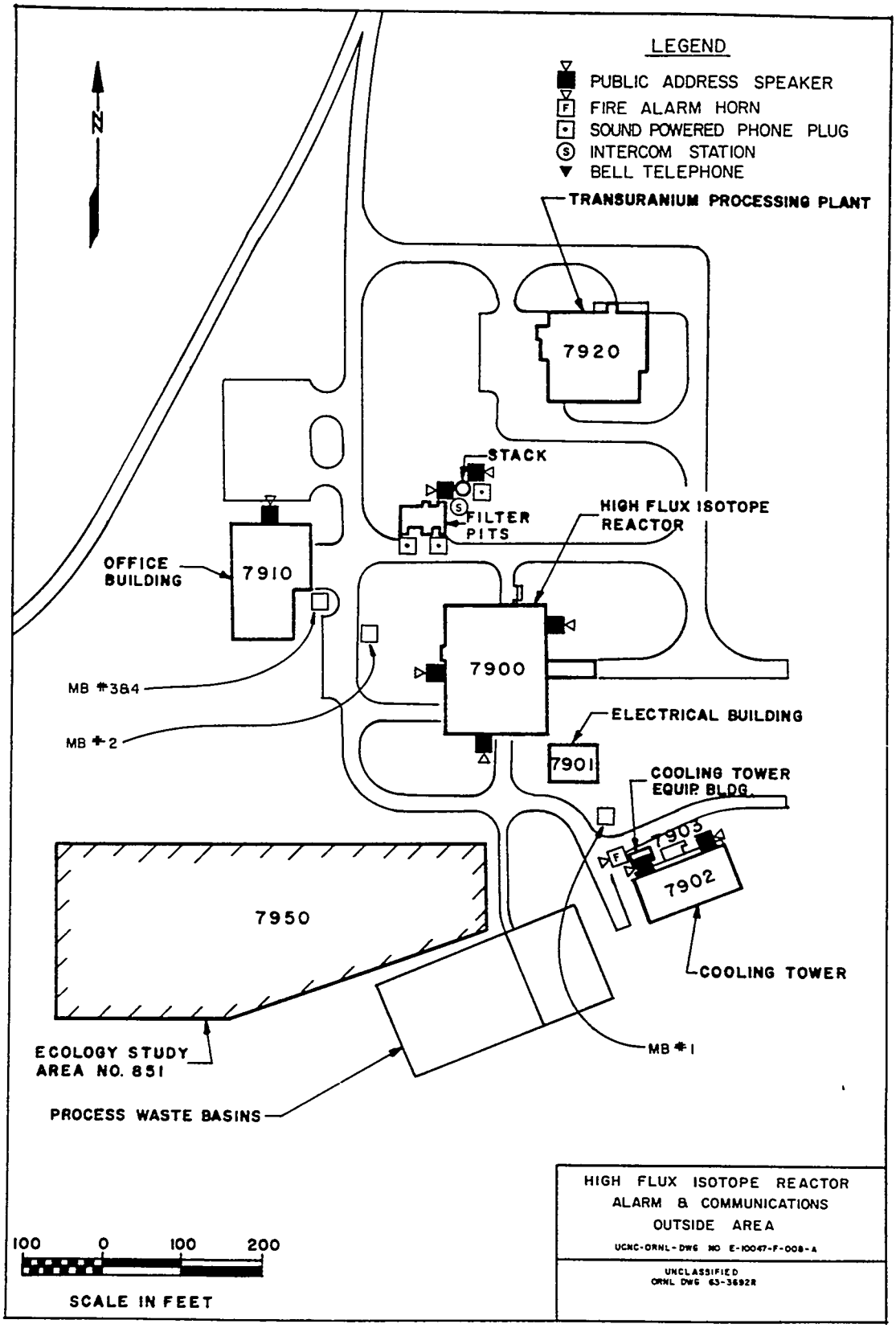

Fig. 10.4.1. Alarm and Communications – Outside Area.

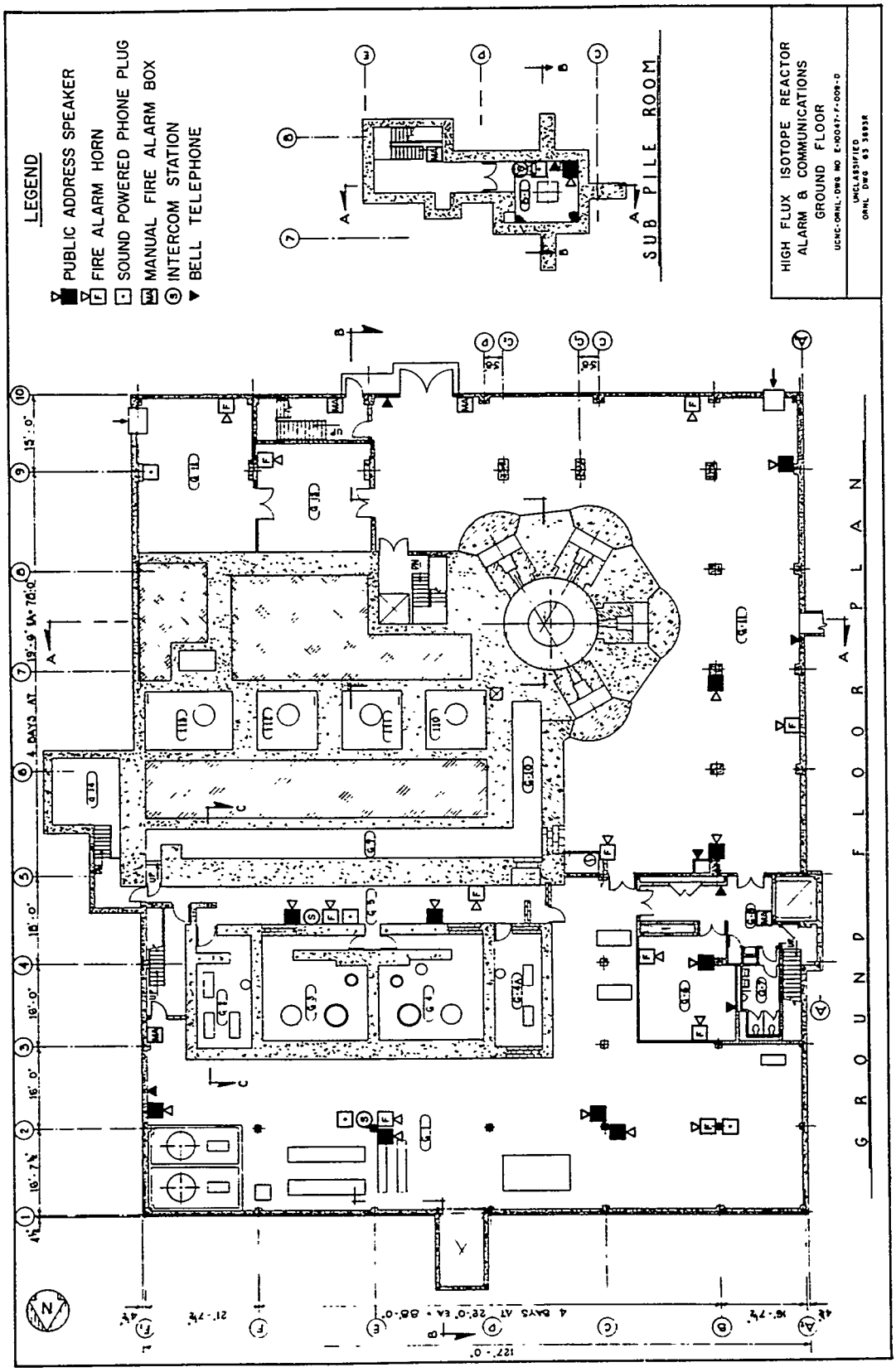

Fig. 10.4.2. Alarm and Communications – Ground Floor.

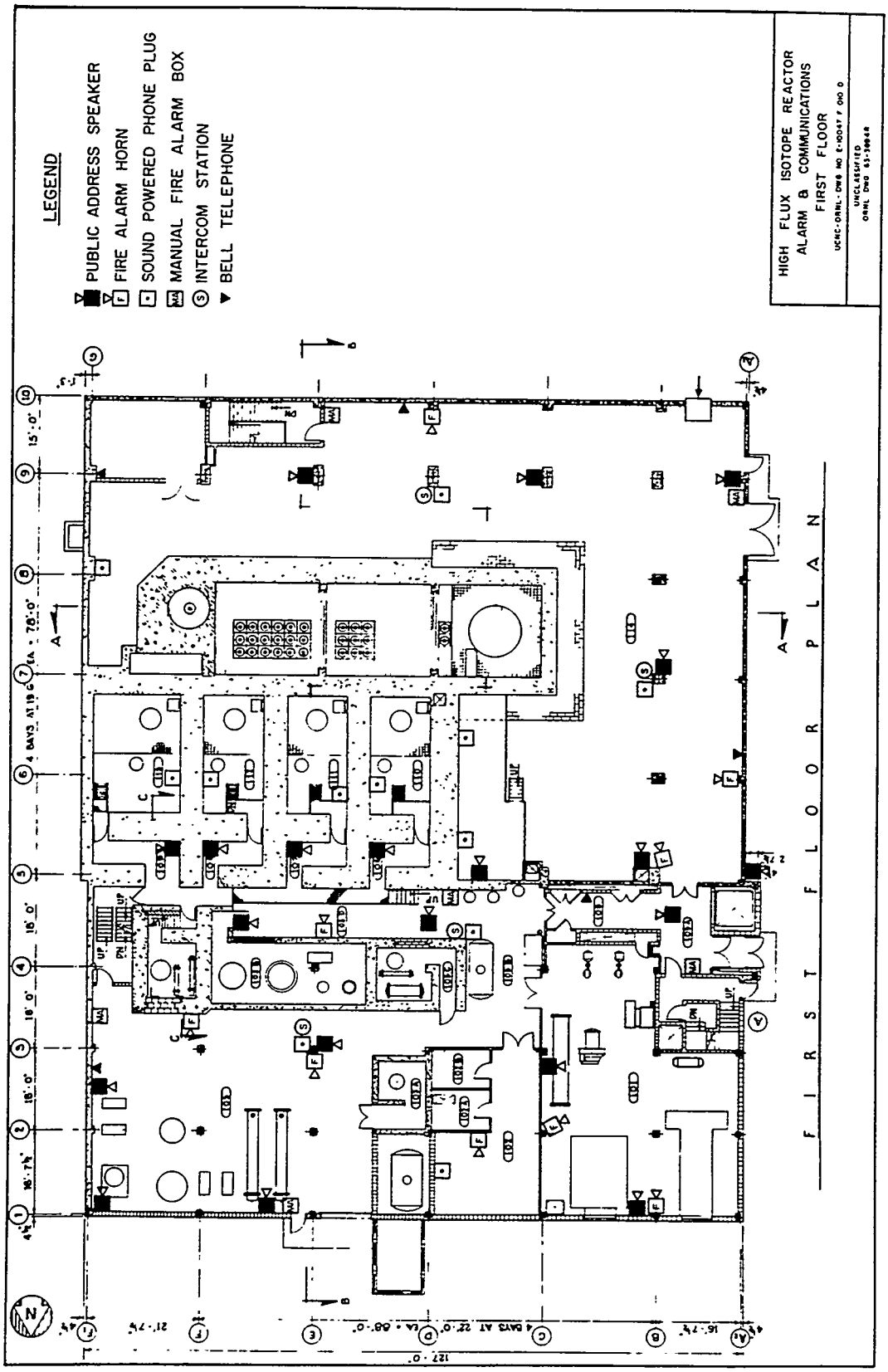

Fig. 10.4.3. Alarm and Communications – First Floor.

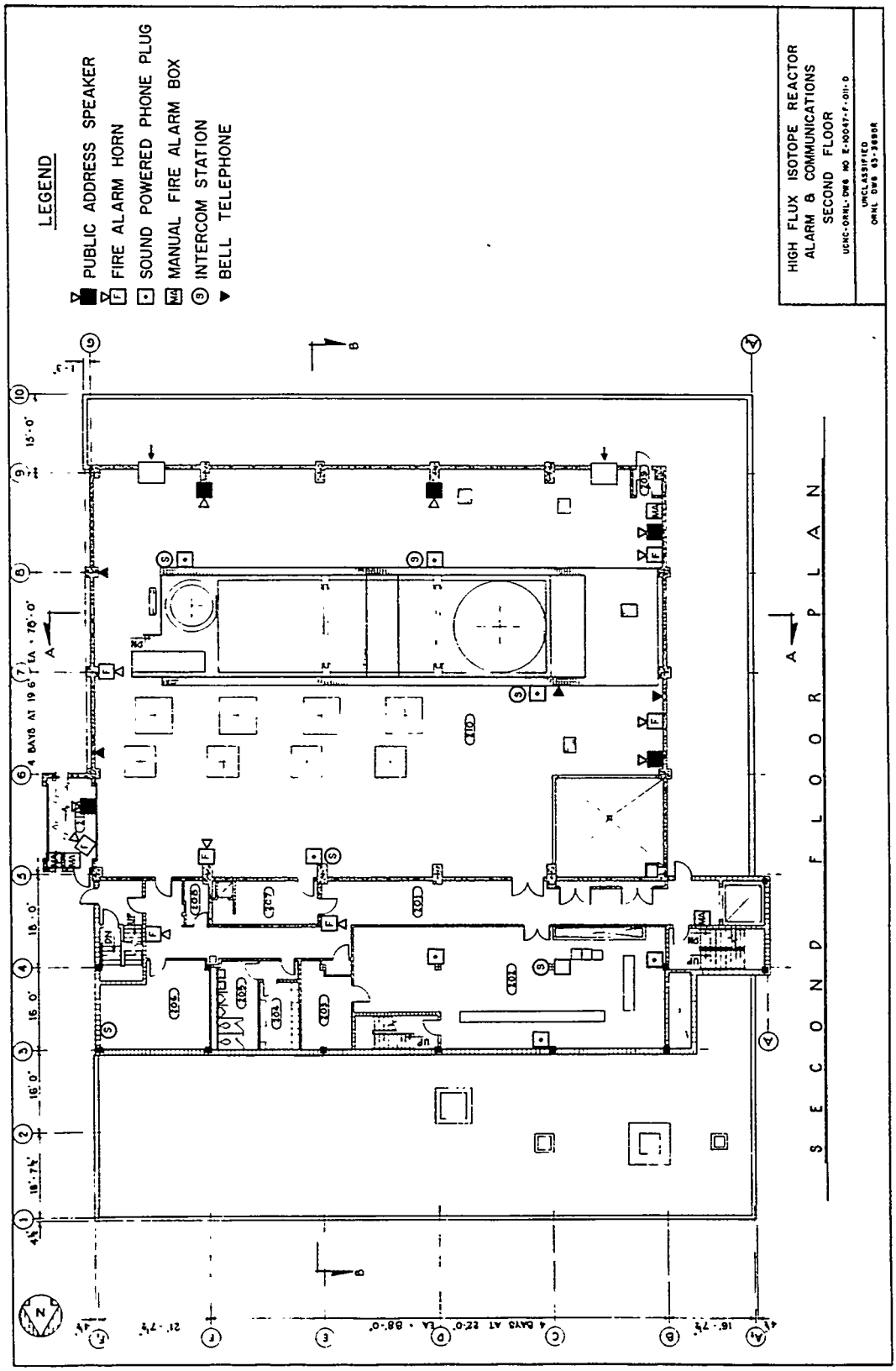

Fig. 10.4.4. Alarm and Communications – Second Floor.

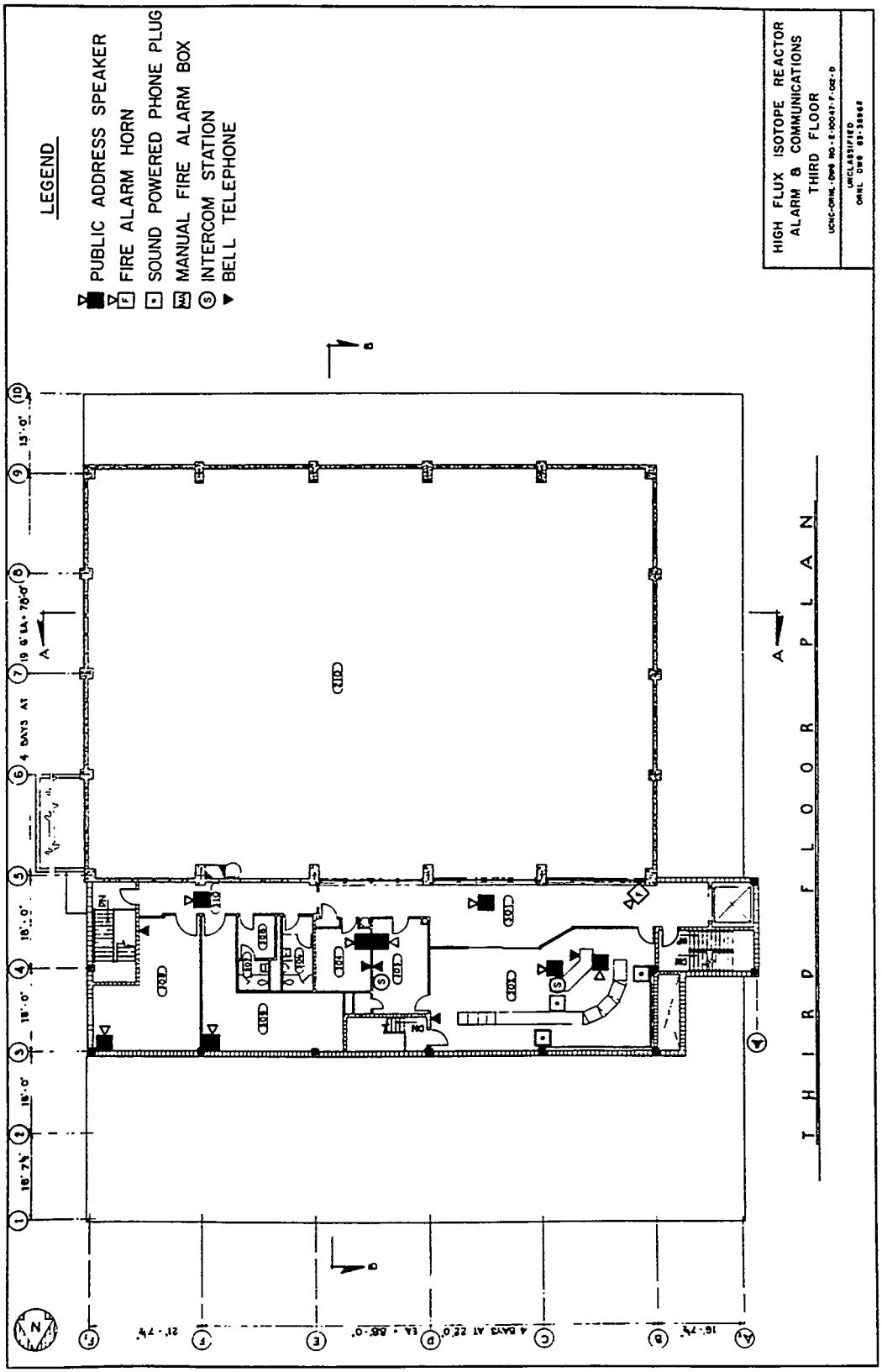

Fig. 10.4.5. Alarm and Communications – Third Floor.

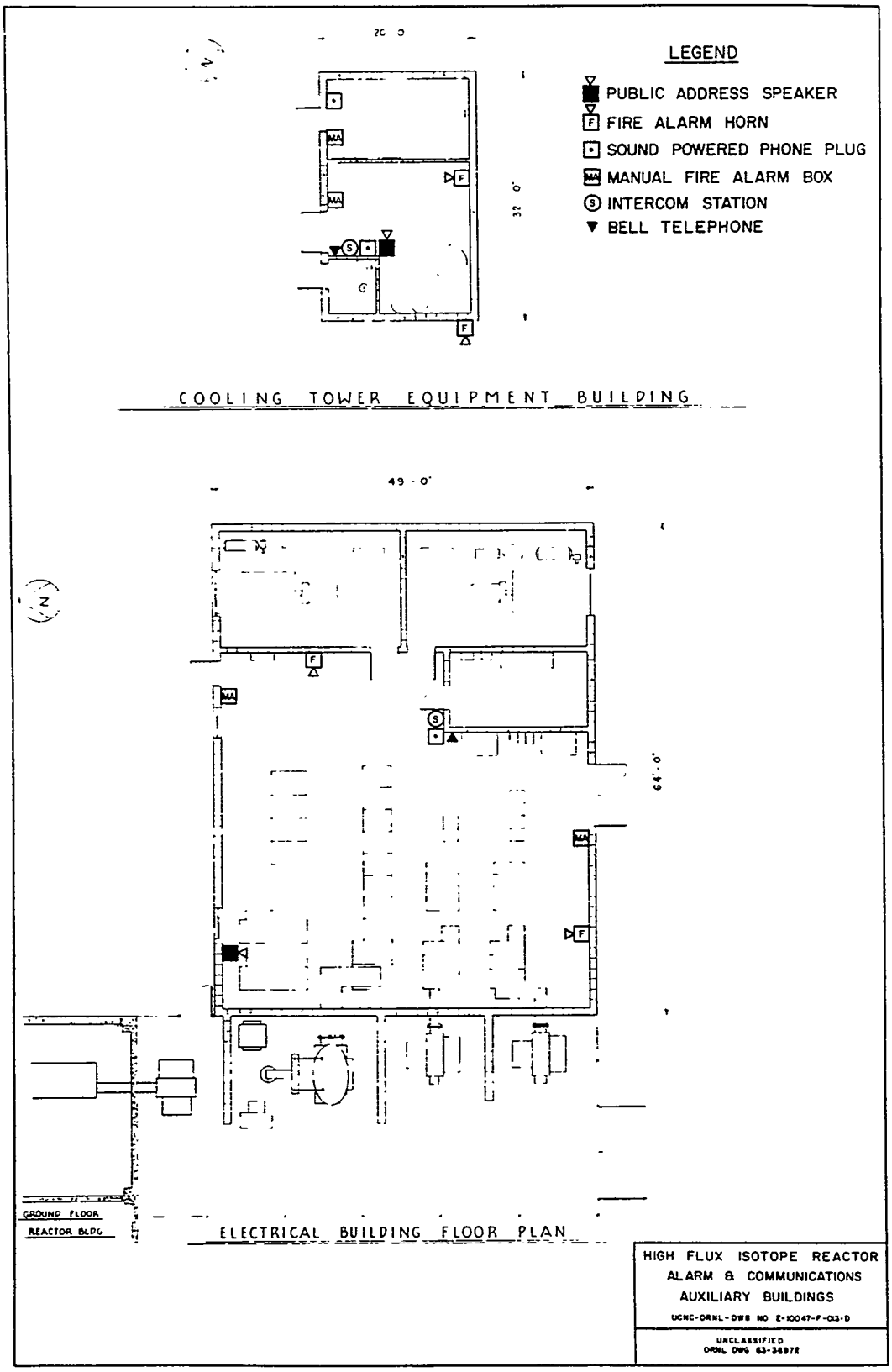

Fig. 10.4.6. Alarm and Communications – Auxiliary Buildings.

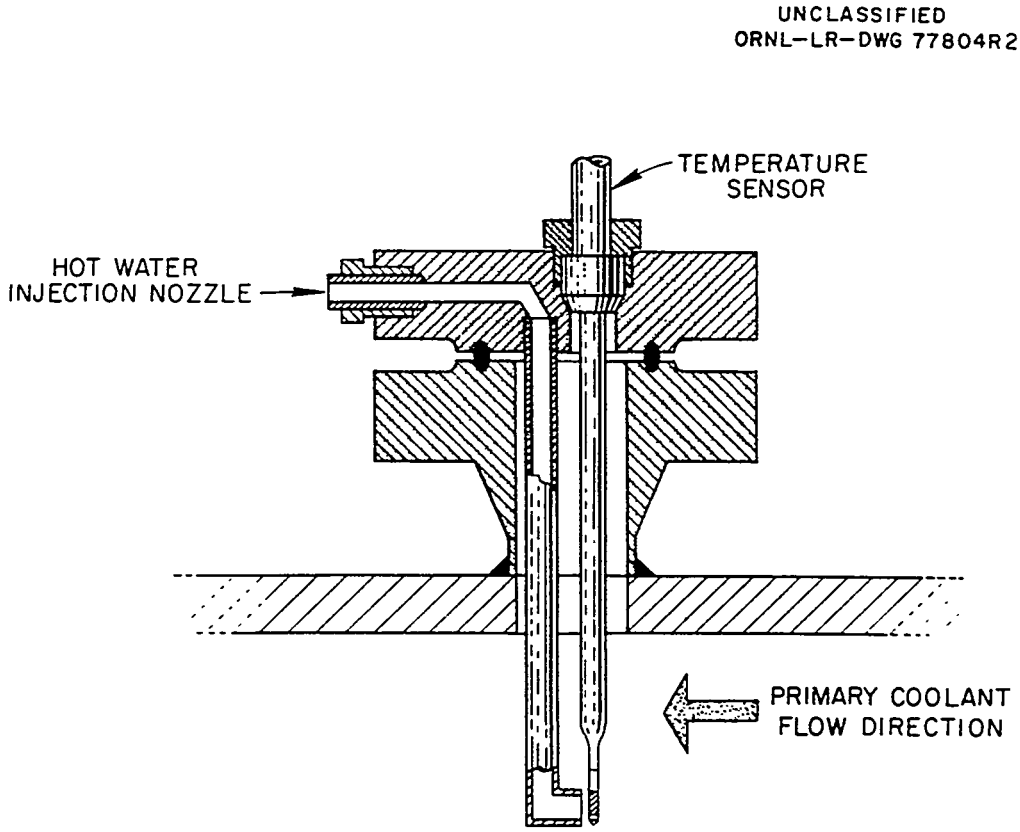

Fig. 11.8.1. Primary Coolant Temperature Sensor and Hot-Water Injection Nozzle.

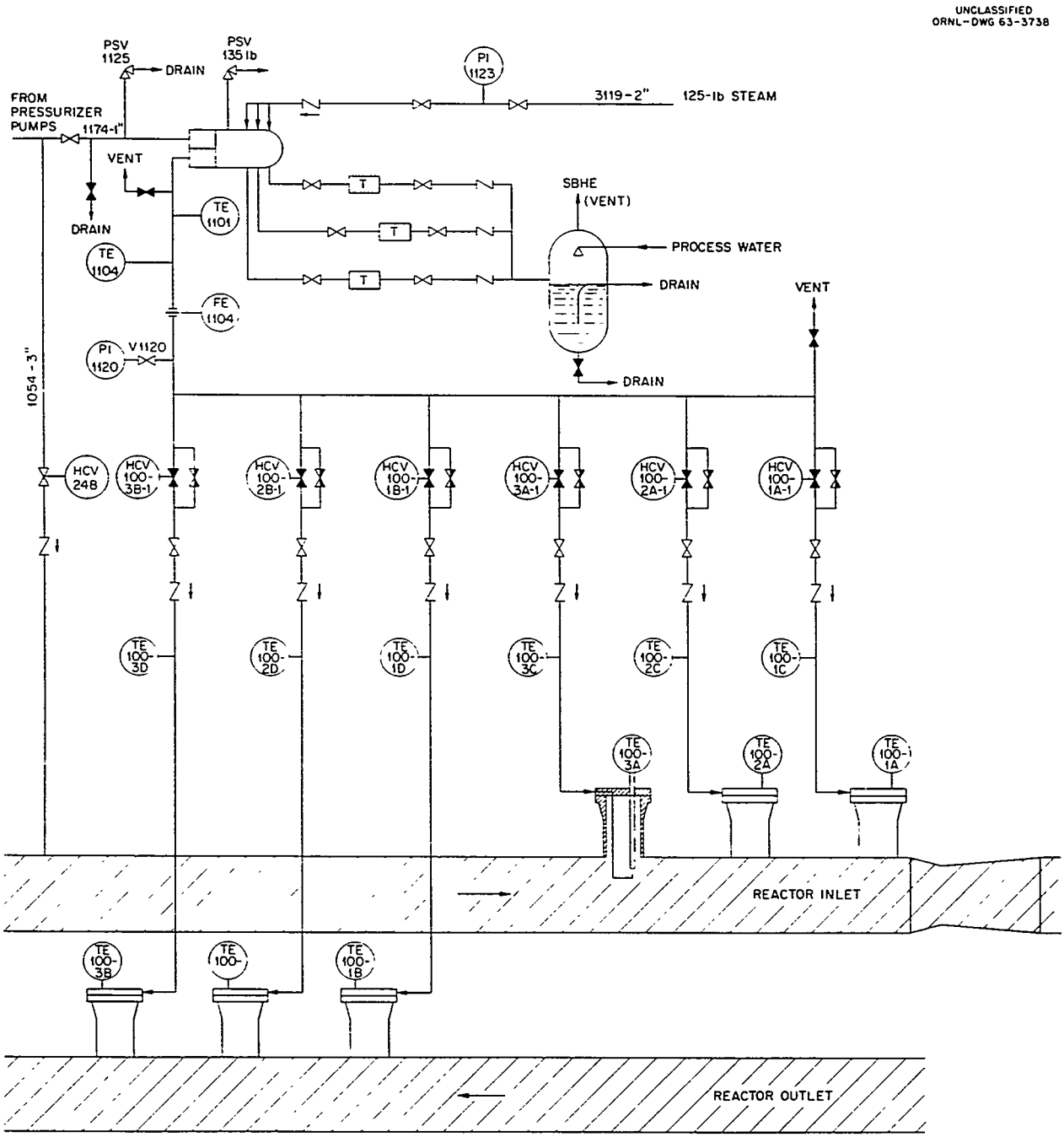

Fig. 11.8.2. Hot-Water Injection System.

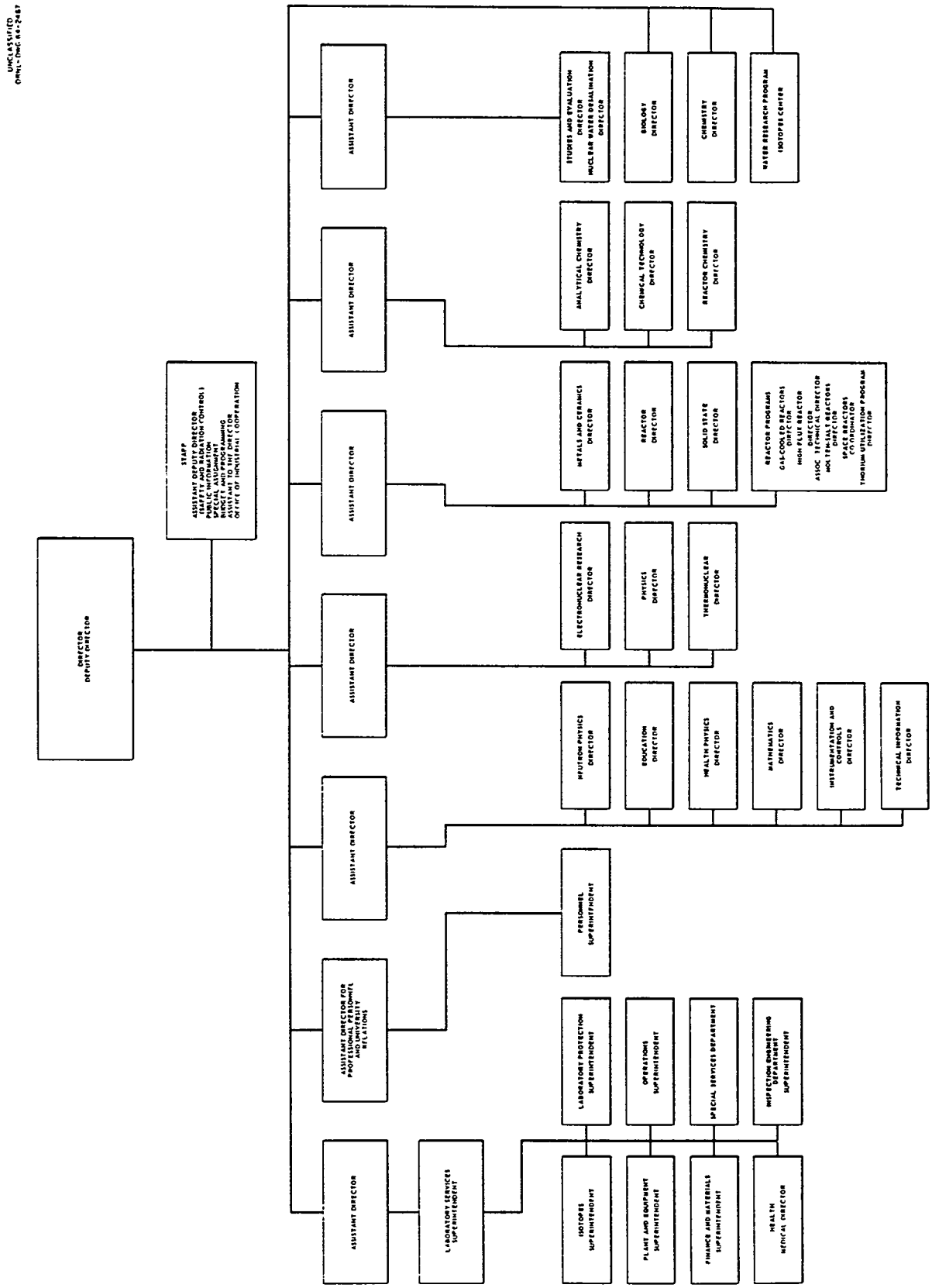

Fig. 12.2.1. ORNL Organization Chart.

UNCLASSIFIED
ORNL-DWG 64-2468

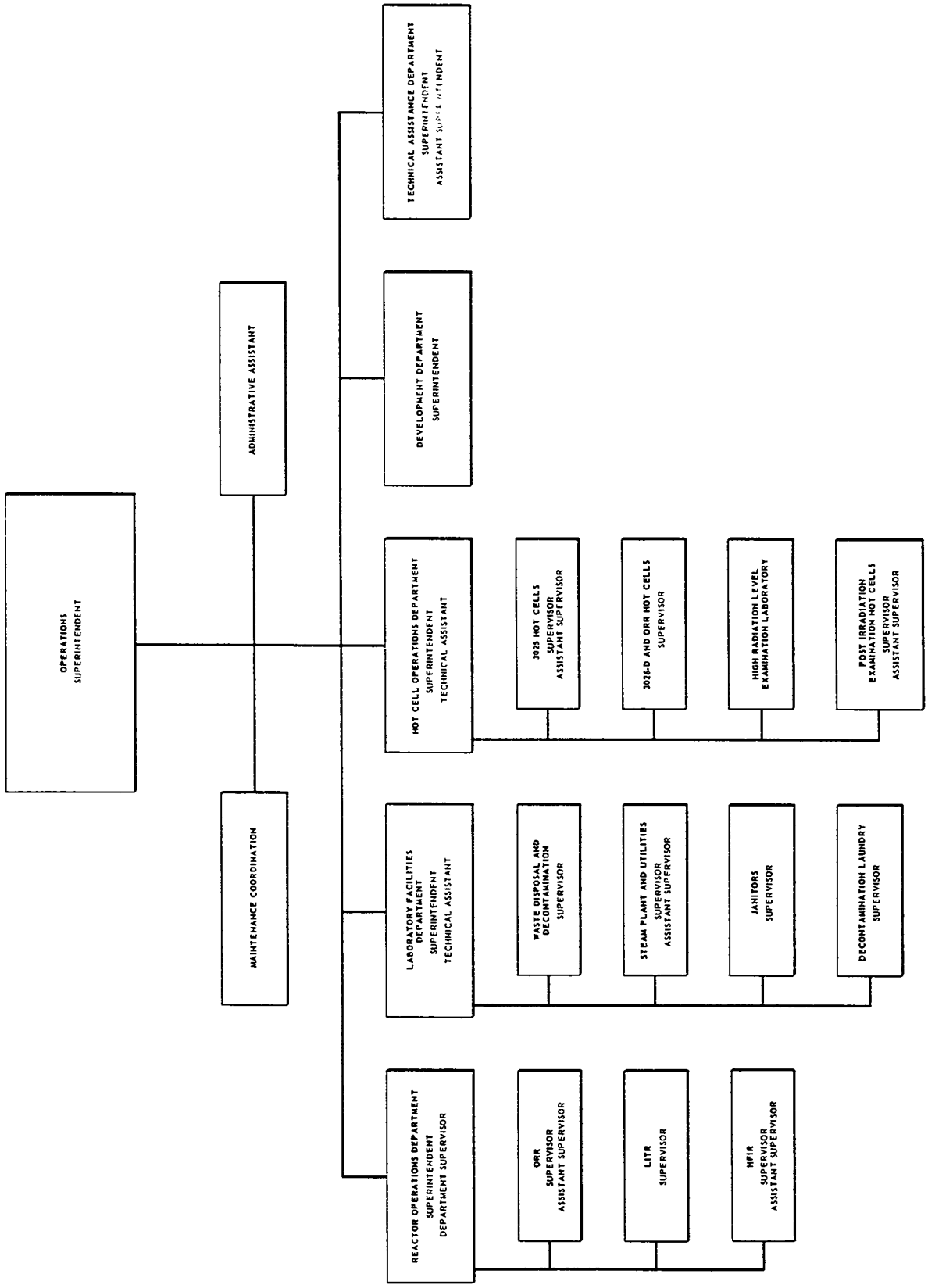

Fig. 12.2.2. Operations Division Organization Chart.

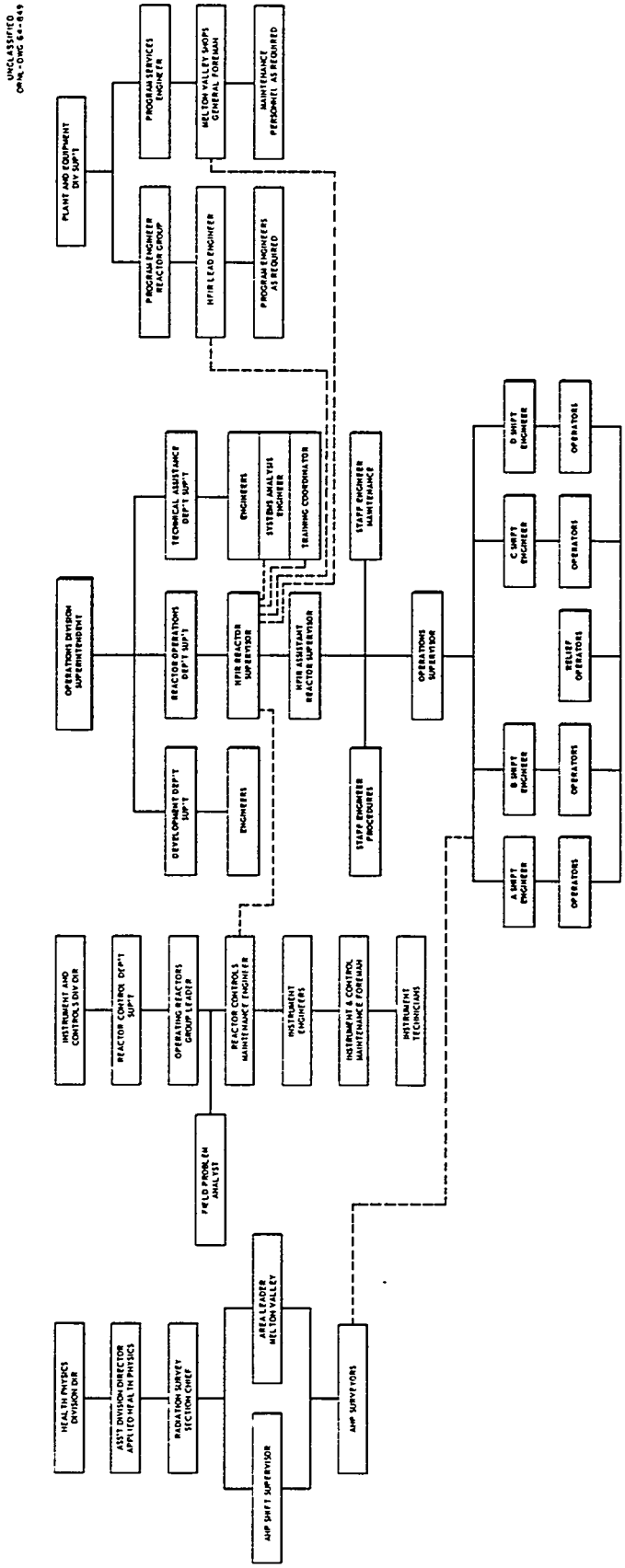

Fig. 12.2.3. HFIR Functional Organization Chart.